AUTHENTICATED
U.S. GOVERNMENT
INFORMATION
GPO

FEDERAL REGISTER

Vol. 80 Tuesday,
No. 110 June 9, 2015

Pages 32439–32854

OFFICE OF THE FEDERAL REGISTER

The **FEDERAL REGISTER** (ISSN 0097–6326) is published daily, Monday through Friday, except official holidays, by the Office of the Federal Register, National Archives and Records Administration, Washington, DC 20408, under the Federal Register Act (44 U.S.C. Ch. 15) and the regulations of the Administrative Committee of the Federal Register (1 CFR Ch. I). The Superintendent of Documents, U.S. Government Publishing Office, Washington, DC 20402 is the exclusive distributor of the official edition. Periodicals postage is paid at Washington, DC.

The **FEDERAL REGISTER** provides a uniform system for making available to the public regulations and legal notices issued by Federal agencies. These include Presidential proclamations and Executive Orders, Federal agency documents having general applicability and legal effect, documents required to be published by act of Congress, and other Federal agency documents of public interest.

Documents are on file for public inspection in the Office of the Federal Register the day before they are published, unless the issuing agency requests earlier filing. For a list of documents currently on file for public inspection, see *www.ofr.gov.*

The seal of the National Archives and Records Administration authenticates the Federal Register as the official serial publication established under the Federal Register Act. Under 44 U.S.C. 1507, the contents of the **Federal Register** shall be judicially noticed.

The **Federal Register** is published in paper and on 24x microfiche. It is also available online at no charge at *www.fdsys.gov*, a service of the U.S. Government Publishing Office.

The online edition of the **Federal Register** is issued under the authority of the Administrative Committee of the Federal Register as the official legal equivalent of the paper and microfiche editions (44 U.S.C. 4101 and 1 CFR 5.10). It is updated by 6:00 a.m. each day the **Federal Register** is published and includes both text and graphics from Volume 59, 1 (January 2, 1994) forward. For more information, contact the GPO Customer Contact Center, U.S. Government Publishing Office. Phone 202-512-1800 or 866-512-1800 (toll free). E-mail, *gpocusthelp.com.*

The annual subscription price for the **Federal Register** paper edition is $749 plus postage, or $808, plus postage, for a combined **Federal Register, Federal Register** Index and List of CFR Sections Affected (LSA) subscription; the microfiche edition of the **Federal Register** including the **Federal Register** Index and LSA is $165, plus postage. Six month subscriptions are available for one-half the annual rate. The prevailing postal rates will be applied to orders according to the delivery method requested. The price of a single copy of the daily **Federal Register,** including postage, is based on the number of pages: $11 for an issue containing less than 200 pages; $22 for an issue containing 200 to 400 pages; and $33 for an issue containing more than 400 pages. Single issues of the microfiche edition may be purchased for $3 per copy, including postage. Remit check or money order, made payable to the Superintendent of Documents, or charge to your GPO Deposit Account, VISA, MasterCard, American Express, or Discover. Mail to: U.S. Government Publishing Office—New Orders, P.O. Box 979050, St. Louis, MO 63197-9000; or call toll free 1-866-512-1800, DC area 202-512-1800; or go to the U.S. Government Online Bookstore site, see *bookstore.gpo.gov.*

There are no restrictions on the republication of material appearing in the **Federal Register.**

How To Cite This Publication: Use the volume number and the page number. Example: 80 FR 12345.

Postmaster: Send address changes to the Superintendent of Documents, Federal Register, U.S. Government Publishing Office, Washington, DC 20402, along with the entire mailing label from the last issue received.

SUBSCRIPTIONS AND COPIES

PUBLIC

Subscriptions:

Paper or fiche	**202–512–1800**
Assistance with public subscriptions	**202–512–1806**
General online information	**202–512–1530; 1–888–293–6498**

Single copies/back copies:

Paper or fiche	**202–512–1800**
Assistance with public single copies	**1–866–512–1800 (Toll-Free)**

FEDERAL AGENCIES

Subscriptions:

Assistance with Federal agency subscriptions:

Email	*FRSubscriptions@nara.gov*
Phone	**202–741–6000**

Printed on recycled paper.

Contents

Federal Register

Vol. 80, No. 110

Tuesday, June 9, 2015

Agricultural Marketing Service
PROPOSED RULES
Hardwood Lumber and Hardwood Plywood Promotion, Research and Information Order:
Referendum Procedures, 32488–32492
Hardwood Lumber and Hardwood Plywood Promotion: Research and Information Order, 32493–32508

Agriculture Department
See Agricultural Marketing Service
See National Agricultural Statistics Service
See Natural Resources Conservation Service
See Rural Housing Service
NOTICES
Agency Information Collection Activities; Proposals, Submissions, and Approvals, 32524

Bureau of Consumer Financial Protection
RULES
Minimum Requirements for Appraisal Management Companies, 32658–32689

Centers for Disease Control and Prevention
NOTICES
Agency Information Collection Activities; Proposals, Submissions, and Approvals, 32562–32564

Centers for Medicare & Medicaid Services
RULES
Medicare Program; Medicare Shared Savings Program: Accountable Care Organizations, 32692–32845

Children and Families Administration
NOTICES
Agency Information Collection Activities; Proposals, Submissions, and Approvals, 32564–32565
Applications for New Awards:
National Institute on Disability, Independent Living, and Rehabilitation Research—Advanced Rehabilitation Research Training Program, 32565–32570

Coast Guard
RULES
Drawbridge Operations:
China Basin, San Francisco, CA, 32467
Safety Zones:
Fireworks Events in Captain of the Port New York Zone, 32467–32468
Southern California Annual Firework Events for the San Diego Captain of the Port Zone, 32468–32469
Special Local Regulations:
Annual Marine Events on the Colorado River between Davis Dam and Headgate Dam within the San Diego Captain of the Port Zone, 32466–32467
PROPOSED RULES
Seafarers' Access to Maritime Facilities, 32512

Commerce Department
See International Trade Administration
See National Institute of Standards and Technology
See National Oceanic and Atmospheric Administration
See Patent and Trademark Office

Community Living Administration
NOTICES
Agency Information Collection Activities; Proposals, Submissions, and Approvals:
Protection and Advocacy for Assistive Technology Program Performance Report, 32570
Protection and Advocacy Statement of Goals and Priorities, 32570–32571

Comptroller of the Currency
RULES
Minimum Requirements for Appraisal Management Companies, 32658–32689

Copyright Office, Library of Congress
NOTICES
Inquiries:
Mass Digitization Pilot Program, 32614–32615

Defense Department
NOTICES
Meetings:
Defense Policy Board, 32544–32545
National Commission on the Future of the Army, 32543–32544

Education Department
NOTICES
Applications for New Awards:
Skills for Success Program, 32545–32551
Federal Need Analysis Methodology for the 2016–17 Award Years:
Federal Pell Grant, Federal Perkins Loan, Federal Work-Study, Federal Supplemental Educational Opportunity Grant, William D. Ford Federal Direct Loan, Iraq and Afghanistan Service Grant and TEACH Grant Programs, 32551–32552

Energy Department
See Federal Energy Regulatory Commission
NOTICES
Filings:
Self-Certification of Coal Capability Under the Powerplant and Industrial Fuel Use Act, 32552

Environmental Protection Agency
RULES
Air Quality State Implementation Plans; Approvals and Promulgations:
Maryland; Biomass Fuel-Burning Equipment Standards, 32472–32474
Pennsylvania; 2011 Lead Base Year Emissions Inventory, 32474–32477
Rhode Island; Decommissioning of Stage II Vapor Recovery Systems and Amending Stage I Vapor Recovery Requirements, 32469–32472
PROPOSED RULES
Air Quality State Implementation Plans; Approvals and Promulgations:
Pennsylvania; 2011 Lead Base Year Emissions Inventory, 32522–32523

Federal Aviation Administration
RULES
Airworthiness Directives:
Agusta S.p.A. (Agusta) Helicopters, 32445–32449
Agusta S.p.A. Helicopters, 32451–32453
Airbus Helicopters (Previously Eurocopter France) Helicopters, 32456–32458
ATR–GIE Avions de Transport Regional Airplanes, 32453–32456
Bell Helicopter Textron Canada Limited, 32458–32460
Bombardier, Inc. Airplanes, 32449–32451
Lockheed Martin Corporation/Lockheed Martin Aeronautics Company Airplanes, 32441–32445
Sikorsky Aircraft Corp. (Sikorsky) Model Helicopters, 32461–32464
Sikorsky Aircraft Corp. (Type Certificate Previously held by Schweizer Aircraft Corp.) Helicopters, 32460–32461
Amendment of VOR Federal Airways:
Northeastern United States, 32464–32465
Special Conditions:
CFM International, LEAP–1A and –1C Engine Models; Incorporation of Woven Composite Fan Blades, 32440–32441
PROPOSED RULES
Airworthiness Directives:
British Aerospace Regional Aircraft Airplanes, 32510–32512
MD Helicopters Inc., 32508–32510

Federal Communications Commission
NOTICES
Agency Information Collection Activities; Proposals, Submissions, and Approvals, 32558–32559
Radio Broadcasting Services; AM or FM Proposals to Change the Community of License, 32558

Federal Deposit Insurance Corporation
RULES
Minimum Requirements for Appraisal Management Companies, 32658–32689

Federal Emergency Management Agency
NOTICES
Changes in Flood Hazard Determinations, 32581–32588
Major Disaster and Related Determinations:
Texas, 32581
Major Disaster Declarations:
Kentucky; Amendment No. 1, 32581
Proposed Flood Hazard Determinations, 32579–32580

Federal Energy Regulatory Commission
NOTICES
Combined Filings, 32553–32557
Initial Market-Based Rate Filings Including Requests for Blanket Section 204 Authorizations:
Balko Wind Transmission, LLC, 32556
Dillon Power, LLC, 32552
Panda Liberty LLC, 32555–32556
Staff Attendances, 32557–32558

Federal Housing Finance Agency
RULES
Minimum Requirements for Appraisal Management Companies, 32658–32689

Federal Reserve System
RULES
Minimum Requirements for Appraisal Management Companies, 32658–32689
NOTICES
Agency Information Collection Activities; Proposals, Submissions, and Approvals:
Prohibition on Funding of Unlawful Internet Gambling, 32559–32560
Formations of, Acquisitions by, and Mergers of Bank Holding Companies, 32560–32561

Food and Drug Administration
NOTICES
Agency Information Collection Activities; Proposals, Submissions, and Approvals
Evaluation of the Food and Drug Administration's 'Fresh Empire' Multicultural Youth Tobacco Prevention Campaign, 32572
Agency Information Collection Activities; Proposals, Submissions, and Approvals:
Prominent and Conspicuous Mark of Manufacturers on Single-Use Devices, 32571–32572
Risk and Benefit Perception Scale Development, 32571

General Services Administration
NOTICES
Agency Information Collection Activities; Proposals, Submissions, and Approvals:
Office of Mission Assurance; Background Investigations for Child Care Workers, 32561–32562

Government Accountability Office
NOTICES
Letters of Nominations of Candidates:
Physician-focused Payment Model Technical Advisory Committee, 32562

Health and Human Services Department
See Centers for Disease Control and Prevention
See Centers for Medicare & Medicaid Services
See Children and Families Administration
See Community Living Administration
See Food and Drug Administration
See National Institutes of Health
RULES
Acceptance and Approval of Non-Governmental Developed Test Procedures, Test Tools, and Test Data for Use under the ONC Health IT Certification Program, 32477
NOTICES
Agency Information Collection Activities; Proposals, Submissions, and Approvals, 32572–32573

Homeland Security Department
See Coast Guard
See Federal Emergency Management Agency
See U.S. Customs and Border Protection
NOTICES
Guidance:
Improving Survivability in Improvised Explosive Device and/or Active Shooter Incidents, 32588–32589
Privacy Act; Systems of Records, 32588

Housing and Urban Development Department
NOTICES
United Nations Conference on Housing and Sustainable Urban Development; Solicitation of Interest; Co-Lead Policy Units, 32589–32590

Interior Department
See Land Management Bureau
See National Park Service
See Reclamation Bureau

International Trade Administration
NOTICES
Antidumping or Countervailing Duty Investigations, Orders, or Reviews:
Aluminum Extrusions from the People's Republic of China, 32528–32532
Certain New Pneumatic Off-The-Road Tires from the People's Republic of China, 32532–32533
Certain Steel Nails from the United Arab Emirates, 32527–32528
Narrow Woven Ribbon with Woven Selvedge from the People's Republic of China, 32534–32535
Saccharin from the People's Republic of China, 32533–32534

International Trade Commission
NOTICES
Antidumping or Countervailing Duty Investigations, Orders, or Reviews:
Certain Corrosion-Resistant Steel Products from China, India, Italy, Korea, and Taiwan, 32606–32607
Investigations; Determinations, Modifications, and Rulings, etc.:
Certain Automated Teller Machines and Point of Sale Devices and Associated Software Thereof, 32605–32606
Certain Steel Nails from Korea, Malaysia, Oman, and Taiwan, 32606

Justice Department
NOTICES
Agency Information Collection Activities; Proposals, Submissions, and Approvals:
2016/2018 Identity Theft Supplement, 32610–32611
FBI National Academy; United States Holocaust Memorial's Law Enforcement and Society Questionnaire, 32611
Survey—National Corrections Reporting Program, 32607–32609
Consent Decrees under the Clean Water Act, 32609
Proposed Consent Decrees under the Clean Air Act, 32609–32610

Labor Department
See Occupational Safety and Health Administration

Land Management Bureau
NOTICES
Environmental Impact Statements; Availability, etc.:
Proposed Soda Mountain Solar Project, San Bernardino County, CA; Proposed Land Use Plan Amendment, 32590–32591
Meetings:
Central Montana Resource Advisory Council, 32591–32592

Legal Services Corporation
NOTICES
Meetings; Sunshine Act, 32613

Library of Congress
See Copyright Office, Library of Congress

National Aeronautics and Space Administration
NOTICES
Charter Renewals:
National Space-Based Positioning, Navigation, and Timing Advisory Board, 32615

National Agricultural Statistics Service
NOTICES
Agency Information Collection Activities; Proposals, Submissions, and Approvals, 32524–32525

National Archives and Records Administration
NOTICES
Agency Information Collection Activities; Proposals, Submissions, and Approvals, 32615–32616

National Institute of Standards and Technology
NOTICES
Meetings:
National Conference on Weights and Measures, 32535–32537

National Institutes of Health
NOTICES
Meetings:
Center for Scientific Review, 32574–32576
Eunice Kennedy Shriver National Institute of Child Health and Human Development, 32576, 32579
National Cancer Institute; Amendments, 32577–32578
National Heart, Lung, and Blood Institute, 32576, 32578
National Human Genome Research Institute, 32573–32574
National Institute of General Medical Sciences, 32575, 32578
National Institute of Neurological Disorders and Stroke, 32575
National Institute on Aging, 32574, 32577
National Institute on Drug Abuse; Webinar, 32573
National Institute on Minority Health and Health Disparities, 32578
Office of the Director, 32576–32577

National Oceanic and Atmospheric Administration
RULES
Atlantic Coastal Fisheries Cooperative Management Act Provisions:
American Lobster Fishery; Trap Transfer Program Implementation, 32487
Atlantic Highly Migratory Species:
Atlantic Bluefin Tuna Fisheries; Closure, 32478–32479
Fisheries of the Caribbean, Gulf of Mexico, and South Atlantic:
2015 Recreational Accountability Measure and Closure for Blueline Tilefish in the South Atlantic Region, 32478
Fisheries of the Northeastern United States:
Special Management Zones for Delaware Artificial Reefs, 32480–32487
Fisheries off West Coast States:
Highly Migratory Fisheries; California Swordfish Drift Gillnet Fishery; Vessel Monitoring System Requirements, 32465–32466
NOTICES
Meetings:
Center for Independent Experts, 32537

National Park Service
NOTICES
Inventory Completions:
Army Corps of Engineers, St. Louis District, Mark Twain Lake, MO, 32595–32599
Department of the Interior, National Park Service, Everglades National Park, Homestead, FL, 32601–32602
Department of the Interior, National Park Service, Glen Canyon National Recreation Area, Page, AZ, 32592–32593
Department of the Interior, National Park Service, Petrified Forest National Park, Petrified Forest, AZ; Correction, 32602–32603
History Colorado, Formerly Colorado Historical Society, Denver, CO, 32599–32600
National Register of Historic Places:
Pending Nominations and Related Actions, 32594–32595
Repatriation of Cultural Items:
Department of Agriculture, Forest Service, Ozark–St. Francis National Forests, Russellville, AR, 32593–32594
Palm Springs Art Museum, Palm Springs, CA, 32603
Repatriations of Cultural Items:
Longyear Museum of Anthropology, Colgate University, Hamilton, NY, 32600–32601

National Science Foundation
NOTICES
Meetings:
Committee on Equal Opportunities in Science and Engineering, 32616

Natural Resources Conservation Service
RULES
Water Bank Program, 32439–32440
NOTICES
Changes to Section I of the Louisiana Field Office Technical Guide, 32525–32526

Nuclear Regulatory Commission
NOTICES
Facility Operating Licenses:
Applications and Amendments Involving Proposed No Significant Hazards Considerations, etc., 32616–32622, 32624–32634
Meetings; Sunshine Act, 32635
Regulatory Guides:
Standard Format and Content of Transportation Security Plans for Classified Matter Shipments, 32622–32623

Occupational Safety and Health Administration
NOTICES
Meetings:
Federal Advisory Council on Occupational Safety and Health, 32612–32613

Patent and Trademark Office
NOTICES
Agency Information Collection Activities; Proposals, Submissions, and Approvals:
Matters Related to First Inventor to File, 32539–32540
Patent Review and Derivation Proceedings, 32541–32543
Post Registration (Trademark Processing), 32538–32539
Third-party Submissions and Protests, 32537–32538
Trademark Petitions, 32540–32541

Personnel Management Office
NOTICES
Privacy Act; Computer Matching Program, 32635–32636

Presidential Documents
ADMINISTRATIVE ORDERS
Defense and National Security:
National Defense Authorization Act for Fiscal Year 2012 (Presidential Determination No. 2015–06 of May 19, 2015), 32851
Jerusalem Embassy Act; Suspension of Limitations (Presidential Determination No. 2015–07 of June 3, 2015), 32853
Sean and David Goldman International Child Abduction Prevention and Return Act of 2014; Delegation of Authority (Memorandum of May 7, 2015), 32847–32849

Railroad Retirement Board
NOTICES
Agency Information Collection Activities; Proposals, Submissions, and Approvals, 32636–32638

Reclamation Bureau
NOTICES
Environmental Impact Statements; Availability, etc.:
Mendota Pool Bypass and Reach 2B Improvements Project; Public Hearings, 32604–32605

Rural Housing Service
NOTICES
Requests for Applications:
Intermediaries under the Certified Loan Application Packaging Process; Direct Single Family Housing Program, 32526–32527

Securities and Exchange Commission
NOTICES
Applications for Deregistration under the Investment Company Act, 32640–32641
Meetings; Sunshine Act, 32638
Self-Regulatory Organizations; Proposed Rule Changes:
National Stock Exchange, Inc., 32644–32647
NYSE Arca, Inc., 32638–32644

Small Business Administration
NOTICES
Agency Information Collection Activities; Proposals, Submissions, and Approvals, 32647–32648
Disaster Declarations:
Texas, 32648–32649

Transportation Department
See Federal Aviation Administration
NOTICES
Agency Information Collection Activities; Proposals, Submissions, and Approvals:
Women and Girls in Transportation Initiative lntemship Volunteer Program, 32654–32655
Application of Menagerie Enterprises, Inc. d/b/a Monarch Air for Commuter Air Carrier Authority, 32655–32656
Funding Availability:
Small Business Transportation Resource Center Program, 32649–32654

Treasury Department
See Comptroller of the Currency

NOTICES
Agency Information Collection Activities; Proposals, Submissions, and Approvals:
Prohibition on Funding of Unlawful Internet Gambling, 32559–32560

U.S. Customs and Border Protection
NOTICES
Accreditation and Approval as a Commercial Gauger and Laboratory:
Bennett Testing Service, Inc., 32579

Veterans Affairs Department
PROPOSED RULES
Schedule for Rating Disabilities:
Organs of Special Sense and Schedule of Ratings – Eye, 32513–32522

Separate Parts In This Issue

Part II
Bureau of Consumer Financial Protection, 32658–32689
Federal Deposit Insurance Corporation, 32658–32689
Federal Housing Finance Agency, 32658–32689
Federal Reserve System, 32658–32689
Treasury Department, Comptroller of the Currency, 32658–32689

Part III
Health and Human Services Department, Centers for Medicare & Medicaid Services, 32692–32845

Part IV
Presidential Documents, 32847–32849, 32851, 32853

Reader Aids

Consult the Reader Aids section at the end of this page for phone numbers, online resources, finding aids, reminders, and notice of recently enacted public laws.

To subscribe to the Federal Register Table of Contents LISTSERV electronic mailing list, go to http://listserv.access.gpo.gov and select Online mailing list archives, FEDREGTOC-L, Join or leave the list (or change settings); then follow the instructions.

CFR PARTS AFFECTED IN THIS ISSUE

A cumulative list of the parts affected this month can be found in the Reader Aids section at the end of this issue.

3 CFR

Administrative Orders:

Memorandums:

Memorandum of May 7, 2015 32849

Presidential Determinations:

No. 2015–06 of May 19, 2015 32851

No. 2015–07 of June 3, 2015 32853

7 CFR

633 32439

Proposed Rules:

1211 (2 documents) 32488, 32493

12 CFR

34 32658

208 32658

225 32658

323 32658

390 32658

1026 32658

1222 32658

14 CFR

33 32440

39 (9 documents) 32441, 32445, 32449, 32451, 32453, 32456, 32458, 32460, 32461

71 32464

Proposed Rules:

39 (2 documents) 32508, 32510

15 CFR

902 32465

33 CFR

100 32466

117 32467

165 (3 documents) 32467, 32468

Proposed Rules:

101 32512

105 32512

38 CFR

Proposed Rules:

4 32513

40 CFR

52 (3 documents) 32469, 32472, 32474

62 32474

81 32474

Proposed Rules:

52 32522

42 CFR

425 32692

45 CFR

170 32477

50 CFR

622 32478

635 32478

648 32480

660 32465

697 32487

Rules and Regulations

Federal Register

Vol. 80, No. 110

Tuesday, June 9, 2015

This section of the FEDERAL REGISTER contains regulatory documents having general applicability and legal effect, most of which are keyed to and codified in the Code of Federal Regulations, which is published under 50 titles pursuant to 44 U.S.C. 1510.

The Code of Federal Regulations is sold by the Superintendent of Documents. Prices of new books are listed in the first FEDERAL REGISTER issue of each week.

DEPARTMENT OF AGRICULTURE

Natural Resources Conservation Service

7 CFR Part 633

[Docket No. NRCS–2014–0017]

RIN 0578–AA16

Water Bank Program

AGENCY: Natural Resources Conservation Service, Department of Agriculture.

ACTION: Final rule.

SUMMARY: The Natural Resources Conservation Service (NRCS) is amending the Water Bank Program (WBP) regulations to clarify that lands owned by Indian Tribes are eligible for enrollment. As a non-controversial change to an existing regulation, NRCS is issuing this amendment as a final rule.

DATES: This rule is effective June 9, 2015.

FOR FURTHER INFORMATION CONTACT: Mark Rose, Financial Assistance Programs Division, NRCS, Post Office Box 2890, Washington, DC 20113; telephone: (202) 720–1844; email: *Mark.Rose@wdc.usda.gov*.

SUPPLEMENTARY INFORMATION:

Discussion: NRCS implements WBP in accordance with 16 U.S.C. 1301 *et seq.* (the Water Bank Act). The purpose of the program is to conserve water, preserve and improve the condition of migratory waterfowl habitat and other wildlife resources, and secure other wildlife benefits through 10-year land use agreements with landowners and operators in important migratory waterfowl nesting and breeding areas. Unlike other Federal wetland laws, the Water Bank Act defines wetlands in accordance with Department of the Interior Circular 39, ''Wetlands of the United States.'' WBP agreements encompass inland fresh wetland areas (types 1 through 7) as described in Circular 39, artificially developed inland fresh water areas that meet the description of inland fresh wetland areas (types 1 through 7), and other wetland types designated by the Secretary.

Pursuant to 7 U.S.C. 6962(b)(1), NRCS assumed responsibility for administering WBP and promulgated in September 1997 the current regulations at 7 CFR part 633 for implementation of WBP under NRCS. The current WBP regulation limits enrollment to ''privately-owned'' wetlands only. However, the term ''privately-owned'' is not defined in the regulation and such limitation is not required by statute.

Since Tribal lands are a distinct category of land, NRCS is revising its regulations to clarify that ''privately-owned'' wetlands include lands owned by Indian Tribes, and are therefore eligible for enrollment. NRCS believes that issuance of a final rule without a public comment period is appropriate because this is a non-controversial change to an existing regulation to remove a current impediment to providing assistance to Indian Tribes and their members.

Tribal lands are an important component of the wetland landscape in States where NRCS currently offers enrollment (Minnesota, North Dakota, and South Dakota). Therefore, to ensure WBP is meeting its program purposes, consistent with statute, NRCS is revising the regulation to identify Tribal lands as eligible for enrollment.

Regulatory Certifications

Executive Order 12866: This document does not meet the criteria for a significant regulatory action as specified in Executive Order 12866.

Regulatory Flexibility Act: It has been determined that the Regulatory Flexibility Act is not applicable to this rule because NRCS is not required by 5 U.S.C. 553, or any other provision of law, to publish a notice of proposed rule-making with respect to the subject matter of this rule.

Paperwork Reduction Act: No substantive changes have been made in this final rule which affect the recordkeeping requirements and estimated burdens previously reviewed and approved under Office of Management and Budget control number 0578–0013.

Executive Order 13175: NRCS has determined that this action will remove an impediment to providing WBP assistance to Indian Tribes. Given its modest funding, NRCS has determined this regulation will not have a significant direct effect on one or more Indian Tribes, or on either the relationship or distribution of powers and responsibilities between the Federal Government and the Indian Tribes. Therefore, this action is not subject to the requirements of Executive Order 13175, ''Consultation and Coordination with Indian Tribal Governments.'' Although the consultation requirements do not apply, the agency has developed an outreach and collaboration plan that it will implement as it develops its conservation program policy, and NRCS will incorporate WBP information where appropriate.

Executive Order 13132: Executive Order 13132 requires agencies to conform to principles of Federalism in the development of its policies and regulations. NRCS has determined that this final rule will conform to Federalism principles. In particular, the final rule will not impose any compliance cost on the States; and will not have substantial direct effects on the States, on the relationship between the Federal Government and the States, or on the distribution of power and responsibilities on the various levels of government.

Unfunded Mandates Reform Act of 1995: Pursuant to 2 U.S.C. 1532 (Title II, Sec. 202 of the Unfunded Mandates Reform Act of 1995), NRCS assessed the effects of this rulemaking action on State, local, and Tribal governments, and the public. This action does not compel the expenditure of $100 million or more by any State, local or Tribal governments, or anyone in the private sector, and therefore, a statement under 2 U.S.C. 1532 is not required.

Federal Domestic Assistance Program: The title and number of the Federal Domestic Assistance Program, as found in the Catalog of Federal Domestic Assistance, to which this rule applies is Water Bank Program 10.062.

List of Subjects in 7 CFR Part 633

Administrative practices and procedures, Contracts, Natural resources, Technical assistance, Wetlands.

Accordingly, 7 CFR part 633 is amended as follows:

PART 633—WATER BANK PROGRAM

■ 1. The authority citation for part 633 continues to read as follows:

Authority: 16 U.S.C. 1301–1311.

■ 2. Section 633.2 is amended by revising the definition for ''Person'' and adding a definition in alphabetical order for ''Privately-owned'' to read as follows:

§ 633.2 Definitions.

* * * * *

Person means one or more individuals, partnerships, associations, corporations, estates or trusts, or other business enterprises or other legal entities and, whenever applicable, an Indian tribe, a State, a political subdivision of a State, or any agency thereof.

* * * * *

Privately-owned means owned or operated by a person other than a State, a political subdivision of a State, or any agency thereof.

* * * * *

■ 3. Section 633.4 is amended by revising paragraph (d)(2) to read as follows:

§ 633.4 Program requirements.

* * * * *

(d) * * *

(2) Lands owned by an agency of the United States other than land held in trust for Indian Tribes;

* * * * *

Signed this 29 day of May, 2015 in Washington, DC

Jason A. Weller,

Chief, Natural Resources Conservation Service.

[FR Doc. 2015–13992 Filed 6–8–15; 8:45 am]

BILLING CODE 3410–16–P

DEPARTMENT OF TRANSPORTATION

Federal Aviation Administration

14 CFR Part 33

[Docket No. FAA–2014–0637; Special Conditions No. 33–015–SC]

Special Conditions: CFM International, LEAP–1A and –1C Engine Models; Incorporation of Woven Composite Fan Blades

AGENCY: Federal Aviation Administration (FAA), DOT.

ACTION: Final special conditions.

SUMMARY: These special conditions are issued for the CFM International (CFM), LEAP–1A and –1C engine models. These engine models will have a novel or unusual design feature associated with the engine fan blades—new woven composite fan blades. The applicable airworthiness regulations do not contain adequate or appropriate safety standards for this design feature. These special conditions contain the additional safety standards that the Administrator considers necessary to establish a level of safety equivalent to that established by the existing airworthiness standards.

DATES: Effective July 9, 2015.

FOR FURTHER INFORMATION CONTACT: For technical questions concerning this action, contact Alan Strom, ANE–111, Engine and Propeller Directorate, Aircraft Certification Service, 12 New England Executive Park, Burlington, Massachusetts 01803; telephone (781) 238–7143; facsimile (781) 238–7199; email *alan.strom@faa.gov.*

For legal questions concerning this action, contact Vincent Bennett, ANE–7, Engine and Propeller Directorate, Aircraft Certification Service, 12 New England Executive Park, Burlington, Massachusetts 01803; telephone (781) 238–7044; facsimile (781) 238–7055; email *vincent.bennett@faa.gov.*

SUPPLEMENTARY INFORMATION:

Background

On June 27, 2012, CFM International (CFM) applied for a type certificate for their new LEAP–1A and –1C engine models. The LEAP engine models are high-bypass-ratio engines that incorporate a novel and unusual design feature—new woven composite fan blades. The woven composite fan blades will have significant differences in material property characteristics when compared to conventionally designed fan blades using non-composite metallic materials.

Special conditions are required to ensure that the LEAP–1A and –1C woven composite design fan blades account for the differences in material properties and failure modes relative to conventional single-load path metallic blades. In addition, different containment requirements may be applied provided CFM shows that the blade design below the inner annulus flow path line provides multiple load paths and crack arresting features that prevent delamination or crack propagation to blade failure during the life of the blade.

These special conditions are necessary because the applicable airworthiness regulations do not contain adequate or appropriate safety standards for the new woven composite design fan blades.

Type Certification Basis

Under the provisions of Title 14, Code of Federal Regulations (14 CFR) 21.17, CFM must show that the LEAP–1A and –1C engine models meet the applicable provisions of the applicable regulations in effect on the date of application, except as detailed in paragraphs 21.101(b) and (c). The FAA has determined the following certification basis for the LEAP–1A and –1C engine models:

1. 14 CFR part 33, ''Airworthiness Standards: Aircraft Engines,'' dated February 1, 1965, with Amendments 33–1 through 33–32, dated September 20, 2012.

If the FAA finds that the regulations in effect on the date of the application for the change do not provide adequate or appropriate safety standards for the LEAP–1A and –1C engine models because of a novel or unusual design feature, special conditions are prescribed under the provisions of § 21.16.

Special conditions are initially applicable to the engine model for which they are issued. Should the type certificate for that engine model be amended later to include any other engine model that incorporates the same novel or unusual design feature, the special conditions would also apply to the other engine model under § 21.101.

In addition to complying with the applicable product airworthiness regulations and special conditions, the LEAP–1A and –1C engine models must comply with the fuel venting and exhaust emission requirements of 14 CFR part 34.

The FAA issues special conditions, as defined in 14 CFR 11.19, in accordance with § 11.38, and they become part of the type-certification basis under § 21.17(a)(2).

Novel or Unusual Design Features

The LEAP–1A and –1C engine models will incorporate the following novel or unusual design feature:

The LEAP–1A and –1C engine models will incorporate woven composite fan blades. The woven composite fan blades will have significant differences in material property characteristics when compared to conventionally designed fan blades using non-composite metallic materials. Composite material design provides the capability to incorporate multiple load paths and crack arresting features that prevent delamination or crack propagation to blade failure during the life of the blade.

The woven composite fan blades are a novel and unusual design feature that requires additional airworthiness standards for type certification of the LEAP–1A and –1C engine models.

Discussion of Comments

A notice of proposed special conditions, No. 33–14–02–SC, for the CFM LEAP–1A and—1C engine models was published in the **Federal Register** on Friday, November 14, 2014 (79 FR 68137). No comments were received and the special conditions are adopted as proposed.

Applicability

As discussed above, these special conditions are applicable to the LEAP –1A and –1C engine models. Should CFM apply at a later date for a change to the type certificate to include another model on the same type certificate incorporating the same novel or unusual design feature, the special conditions would apply to that model as well.

Conclusion

This action affects only certain novel or unusual design features on LEAP–1A and –1C engine models. It is not a rule of general applicability and applies only to CFM, who requested FAA approval of this engine feature.

List of Subjects in 14 CFR Part 33

Aircraft, Engines, Aviation Safety, Reporting and recordkeeping requirements.

The authority citation for these special conditions is as follows:

Authority: 49 U.S.C. 106(g), 40113, 44701, 44702, 44704.

The Special Conditions

Accordingly, pursuant to the authority delegated to me by the Administrator, the following special conditions are issued as part of the type certification basis for CFM LEAP–1A and –1C engine models.

1. Part 33, Requirements

In addition to the airworthiness standards in 14 CFR part 33, effective February 1, 1965, with Amendments 33–1 through 33–32 applicable to the LEAP–1A and –1C engine models, CFM will:

(a) Conduct an engine fan blade containment test with the fan blade failing at the inner annulus flow path line instead of at the outermost retention groove.

(b) Substantiate by test and analysis, or other methods acceptable to the FAA, that a fan disk and fan blade retention system with minimum material properties can withstand, without failure, a centrifugal load equal to two times the maximum load the retention system could experience within approved engine operating limitations. The fan blade retention system includes the portion of the fan blade from the inner annulus flow path line inward to the blade dovetail, the blade retention components, and the fan disk and fan blade attachment features.

(c) Using a procedure approved by the FAA, establish an operating limitation that specifies the maximum allowable number of start-stop stress cycles for the fan blade retention system. The life evaluation must include the combined effects of high-cycle and low-cycle fatigue. If the operating limitation is less than 100,000 cycles, that limitation must be specified in Chapter 5 of the Engine Manual Airworthiness Limitations Section. The procedure used to establish the maximum allowable number of start-stop stress cycles for the fan blade retention system will incorporate the integrity requirements in paragraphs (c)(1), (c)(2), and (c)(3) of these special conditions for the fan blade retention system.

(1) An engineering plan, which establishes and maintains that the combinations of loads, material properties, environmental influences, and operating conditions, including the effects of parts influencing these parameters, are well known or predictable through validated analysis, test, or service experience.

(2) A manufacturing plan that identifies the specific manufacturing constraints necessary to consistently produce the fan blade retention system with the attributes required by the engineering plan.

(3) A service management plan that defines in-service processes for maintenance and repair of the fan blade retention system, which will maintain attributes consistent with those required by the engineering plan.

(d) Substantiate by test and analysis, or other methods acceptable to the FAA, that the blade design below the inner annulus flow path line provides multiple load paths and crack arresting features that prevent delamination or crack propagation to blade failure during the life of the blade.

(e) Substantiate that during the service life of the engine, the total probability of an individual blade retention system failure resulting from all possible causes, as defined in § 33.75, will be extremely improbable with a cumulative calculated probability of failure of less than 10^{-9} per engine flight hour.

(f) Substantiate by test or analysis that not only will the engine continue to meet the requirements of § 33.75 following a lightning strike on the composite fan blade structure, but that the lightning strike will not cause damage to the fan blades that would prevent continued safe operation of the affected engine.

(g) Account for the effects of in-service deterioration, manufacturing variations, minimum material properties, and environmental effects during the tests and analyses required by paragraphs (a), (b), (c), (d), (e), and (f) of these special conditions.

(h) Propose fleet leader monitoring and field sampling programs that will monitor the effects of engine fan blade usage and fan blade retention system integrity.

(i) Mark each fan blade legibly and permanently with a part number and a serial number.

Issued in Burlington, Massachusetts, on June 1, 2015.

Ann C. Mollica,

Acting Manager, Engine and Propeller Directorate, Aircraft Certification Service.

[FR Doc. 2015–14084 Filed 6–8–15; 8:45 am]

BILLING CODE 4910–13–P

DEPARTMENT OF TRANSPORTATION

Federal Aviation Administration

14 CFR Part 39

[Docket No. FAA–2014–0227; Directorate Identifier 2013–NM–211–AD; Amendment 39–18165; AD 2015–11–02]

RIN 2120–AA64

Airworthiness Directives; Lockheed Martin Corporation/Lockheed Martin Aeronautics Company Airplanes

AGENCY: Federal Aviation Administration (FAA), DOT.

ACTION: Final rule.

SUMMARY: We are superseding Airworthiness Directive (AD) 95–26–11 for all Lockheed Martin Corporation/Lockheed Martin Aeronautics Company Model L–1011 series airplanes. AD 95–26–11 required repetitive inspections to detect cracking of the fittings that attach the aft pressure bulkhead to the fuselage stringers, repetitive inspections to detect cracking of the fittings and of the splice tab of the aft pressure bulkhead, and corrective actions if necessary. This new AD requires repetitive inspections to detect cracking of the fittings that attach the aft pressure bulkhead to the fuselage stringers, repetitive inspections to detect cracking of the fittings and of the splice tab of the aft pressure bulkhead, repetitive inspections for cracking of

certain aft fuselage skin panels, a structural modification, a post-modification inspection program, and corrective actions if necessary. This AD was prompted by a determination that the fittings at stringer attachments to the upper region of the aft pressure bulkhead are subject to widespread fatigue damage (WFD). We are issuing this AD to prevent simultaneous failure of multiple stringer end fittings through fatigue cracking at the aft pressure bulkhead, which could lead to rapid decompression of the airplane.

DATES: This AD is effective July 14, 2015.

The Director of the Federal Register approved the incorporation by reference of a certain publication listed in this AD as of July 14, 2015.

The Director of the Federal Register approved the incorporation by reference of a certain other publication listed in this AD as of January 11, 1996 (60 FR 668702, December 27, 1995).

ADDRESSES: For service information identified in this AD, contact Lockheed Martin Corporation/Lockheed Martin Aeronautics Company, L1011 Technical Support Center, Dept. 6A4M, Zone 0579, 86 South Cobb Drive, Marietta, GA 30063–0579; telephone 770–494–5444; fax 770–494–5445; email *L1011.support@lmco.com;* Internet *http://www.lockheedmartin.com/ams/tools/TechPubs.html.* You may view this referenced service information at the FAA, Transport Airplane Directorate, 1601 Lind Avenue SW., Renton, WA. For information on the availability of this material at the FAA, call 425–227–1221. It is also available on the Internet at *http://www.regulations.gov* by searching for and locating Docket No. FAA–2014–0227.

Examining the AD Docket

You may examine the AD docket on the Internet at *http://www.regulations.gov* by searching for and locating Docket No. FAA–2014–0227; or in person at the Docket Management Facility between 9 a.m. and 5 p.m., Monday through Friday, except Federal holidays. The AD docket contains this AD, the regulatory evaluation, any comments received, and other information. The address for the Docket Office (phone: 800–647–5527) is Docket Management Facility, U.S. Department of Transportation, Docket Operations, M–30, West Building Ground Floor, Room W12–140, 1200 New Jersey Avenue SE., Washington, DC 20590.

FOR FURTHER INFORMATION CONTACT: Carl Gray, Aerospace Engineer, Airframe Branch, ACE–117A, FAA, Atlanta Aircraft Certification Office (ACO), 1701 Columbia Avenue, College Park, GA 30337; phone: 404–474–5554; fax: 404–474–5605; email: c*arl.w.gray@faa.gov.*

SUPPLEMENTARY INFORMATION:

Discussion

We issued a supplemental notice of proposed rulemaking (SNPRM) to amend 14 CFR part 39 to supersede AD 95–26–11, Amendment 39–9469 (60 FR 66870, December 27, 1995). AD 95–26–11 applied to all Lockheed Martin Corporation/Lockheed Martin Aeronautics Company Model L–1011 series airplanes. The SNPRM published in the **Federal Register** on November 17, 2014 (79 FR 68377). We preceded the SNPRM with a notice of proposed rulemaking (NPRM) that published in the **Federal Register** on April 14, 2014 (79 FR 20819). The NPRM proposed to require repetitive inspections to detect cracking of the fittings that attach the aft pressure bulkhead to the fuselage stringers, repetitive inspections to detect cracking of the fittings and of the splice tab of the aft pressure bulkhead, repetitive inspections for cracking of certain aft fuselage skin panels, a structural modification, a post-modification inspection program, and corrective actions if necessary. The NPRM was prompted by a determination that the fittings at stringer attachments to the upper region of the aft pressure bulkhead are subject to WFD. The SNPRM proposed to reduce the post-structural modification repetitive inspection interval. We are issuing this AD to prevent simultaneous failure of multiple stringer end fittings through fatigue cracking at the aft pressure bulkhead, which could lead to rapid decompression of the airplane.

Comments

We gave the public the opportunity to participate in developing this AD. We received no comments on the SNPRM (79 FR 68377, November 17, 2014) or on the determination of the cost to the public.

Conclusion

We reviewed the relevant data and determined that air safety and the public interest require adopting this AD as proposed except for minor editorial changes. We have determined that these minor changes:

- Are consistent with the intent that was proposed in the SNPRM (79 FR 68377, November 17, 2014) for correcting the unsafe condition; and
- Do not add any additional burden upon the public than was already proposed in the SNPRM (79 FR 68377, November 17, 2014).

We also determined that these changes will not increase the economic burden on any operator or increase the scope of this AD.

Related Service Information Under 1 CFR Part 51

We reviewed Lockheed Service Bulletin 093–53–105, Revision 3, dated May 31, 2013. The service information describes procedures for inspections for cracking of the stringer end fittings at the aft pressure bulkhead, corrective actions, and a modification that includes replacement of the stringer end fittings of certain stringers with new fittings. This service information is reasonably available because the interested parties have access to it through their normal course of business or by the means identified in the **ADDRESSES** section of this AD.

Costs of Compliance

We estimate that this AD affects 26 airplanes of U.S. registry.

We estimate the following costs to comply with this AD:

ESTIMATED COSTS

Action	Labor cost	Parts cost	Cost per product	Cost on U.S. operators
Inspections [actions retained from AD 95–26–11, Amendment 39–9469 (60 FR 66870, December 27, 1995)].	23 work-hours × $85 per hour = $1,955 per inspection cycle.	$0	$1,955 per inspection cycle	$50,830 per inspection cycle.
Inspections and modification [new action].	185 work-hours × $85 per hour = $15,725.	6,750	$22,475	$584,350.

We estimate the following costs to do any necessary replacements that would be required based on the results of the inspections. We have no way of determining the number of aircraft that might need these replacements:

ON-CONDITION COSTS

Action	Labor cost	Parts cost	Cost per product
Replacement of one fitting	16 work-hour × $85 per hour = $1,360	$250	$1,610

We have received no definitive data that would enable us to provide cost estimates for the other on-condition actions specified in this AD.

Authority for This Rulemaking

Title 49 of the United States Code specifies the FAA's authority to issue rules on aviation safety. Subtitle I, section 106, describes the authority of the FAA Administrator. Subtitle VII: Aviation Programs, describes in more detail the scope of the Agency's authority.

We are issuing this rulemaking under the authority described in Subtitle VII, Part A, Subpart III, Section 44701: ''General requirements.'' Under that section, Congress charges the FAA with promoting safe flight of civil aircraft in air commerce by prescribing regulations for practices, methods, and procedures the Administrator finds necessary for safety in air commerce. This regulation is within the scope of that authority because it addresses an unsafe condition that is likely to exist or develop on products identified in this rulemaking action.

Regulatory Findings

This AD will not have federalism implications under Executive Order 13132. This AD will not have a substantial direct effect on the States, on the relationship between the national government and the States, or on the distribution of power and responsibilities among the various levels of government.

For the reasons discussed above, I certify that this AD:

(1) Is not a ''significant regulatory action'' under Executive Order 12866,

(2) Is not a ''significant rule'' under DOT Regulatory Policies and Procedures (44 FR 11034, February 26, 1979),

(3) Will not affect intrastate aviation in Alaska, and

(4) Will not have a significant economic impact, positive or negative, on a substantial number of small entities under the criteria of the Regulatory Flexibility Act.

List of Subjects in 14 CFR Part 39

Air transportation, Aircraft, Aviation safety, Incorporation by reference, Safety.

Adoption of the Amendment

Accordingly, under the authority delegated to me by the Administrator, the FAA amends 14 CFR part 39 as follows:

PART 39—AIRWORTHINESS DIRECTIVES

■ 1. The authority citation for part 39 continues to read as follows:

Authority: 49 U.S.C. 106(g), 40113, 44701.

§ 39.13 [Amended]

■ 2. The FAA amends § 39.13 by removing Airworthiness Directive (AD) 95–26–11, Amendment 39–9469 (60 FR 66870, December 27, 1995), and adding the following new AD:

2015–11–02 Lockheed Martin Corporation/Lockheed Martin Aeronautics Company: Amendment 39–18165 ; Docket No. FAA–2014–0227; Directorate Identifier 2013–NM–211–AD.

(a) Effective Date

This AD is effective July 14, 2015.

(b) Affected ADs

This AD replaces AD 95–26–11, Amendment 39–9469 (60 FR 66870, December 27, 1995).

(c) Applicability

This AD applies to all Lockheed Martin Corporation/Lockheed Martin Aeronautics Company Model L–1011–385–1, L–1011–385–1–14, L–1011–385–1–15, and L–1011–385–3 airplanes, certificated in any category.

(d) Subject

Air Transport Association (ATA) of America Code 53, Fuselage.

(e) Unsafe Condition

This AD was prompted by a determination that the fittings at stringer attachments to the upper region of the aft pressure bulkhead are subject to widespread fatigue damage (WFD). We are issuing this AD to prevent simultaneous failure of multiple stringer end fittings through fatigue cracking at the aft pressure bulkhead, which could lead to rapid decompression of the airplane.

(f) Compliance

Comply with this AD within the compliance times specified, unless already done.

(g) Retained Detailed Visual Inspection

This paragraph restates the requirements of paragraph (a) of AD 95–26–11, Amendment 39–9469 (60 FR 66870, December 27, 1995), with no changes. Perform a detailed visual inspection to detect cracking of the fittings that attach the aft pressure bulkhead to the fuselage stringers (hereinafter referred to as ''fittings'') at stringers 1 through 10 (right side) and at stringers 56 through 64 (left side), at the later of the times specified in either paragraph (g)(1) or (g)(2) of this AD.

(1) Prior to the accumulation of 20,000 total flight cycles; or

(2) Within the next 25 flight cycles or 10 days after September 28, 1995 (the effective date of AD 95–18–52, Amendment 39–9366 (60 FR 47465, September 13, 1995)), whichever occurs earlier.

(h) Retained Corrective Action for Cracked Fitting

This paragraph restates the requirements of paragraph (c) of AD 95–26–11, Amendment 39–9469 (60 FR 66870, December 27, 1995), with no changes. If any cracked fitting is detected during the inspection required by paragraph (g) of this AD: Before further flight, accomplish the requirements of paragraphs (h)(1) and (h)(2) of this AD.

(1) Replace the cracked fitting with a new fitting, or with a serviceable fitting on which a detailed visual inspection has been performed previously to detect cracking and that has been found to be free of cracks.

(2) Perform a detailed visual inspection to detect cracking in the radius at the lower end of the vertical leg of the bulkhead T-shaped frame between the stringer locations on either side of the stringer having the cracked fitting. If any cracked T-shaped frame is detected: Before further flight, repair in accordance with a method approved by the Manager, Atlanta Aircraft Certification Office (ACO), FAA.

(i) Retained Repetitive Fitting Inspections

This paragraph restates the requirements of paragraph (d) of AD 95–26–11, Amendment 39–9469 (60 FR 66870, December 27, 1995), with no changes. Repeat the inspections and other necessary actions required by paragraphs (g) and (h) of this AD at intervals not to exceed 1,800 flight cycles or 3,000 flight hours, whichever occurs earlier, until paragraph (j) of this AD is accomplished.

(j) Retained Eddy Current Surface Scan (ECSS) Inspections, and Related Investigative and Corrective Actions

This paragraph restates the requirements of paragraph (e) of AD 95–26–11, Amendment 39–9469 (60 FR 66870, December 27, 1995), with revised compliance times specified in paragraph (k) of this AD, exclusion of an ECSS inspection for certain airplanes, and new service information. Except as provided by paragraph (l) of this AD: At the applicable time specified in paragraph (k)(1) of this AD, accomplish the requirements of paragraphs

(j)(1) and (j)(2) of this AD. Repeat the ECSS inspections thereafter at the compliance time specified in paragraph (k)(2) of this AD. Accomplishment of the ECSS inspection constitutes terminating action for the repetitive inspection requirements of paragraph (i) of this AD.

(1) Perform an ECSS inspection to detect cracking of the fittings at stringers 1 through 14 (right side) and at stringers 52 through 64 (left side), in accordance with the Accomplishment Instructions of Lockheed L–1011 Service Bulletin 093–53–105, Revision 1, dated November 17, 1995; or Lockheed Service Bulletin 093–53–105, Revision 3, dated May 31, 2013; except for airplanes with a large (47-inch-wide) aft passenger door, an ECSS inspection of stringers 12, 13, 53, and 54 is not required by this paragraph. Except as provided by paragraph (m) of this AD, if any cracking is detected, prior to further flight, replace the fitting with a new fitting without pilot holes, rework the fitting, and perform various follow-on actions (*i.e.,* bolt hole eddy current (BHEC), ECSS, and borescope inspections; and repair) of the inner and outer tee caps, in accordance with the Accomplishment Instructions of Lockheed L–1011 Service Bulletin 093–53–105, Revision 1, dated November 17, 1995; or Lockheed Service Bulletin 093–53–105, Revision 3, dated May 31, 2013, except as required by paragraph (p) of this AD. As of the effective date of this AD, use only Lockheed Service Bulletin 093–53–105, Revision 3, dated May 31, 2013, for accomplishing the actions required by this paragraph.

(2) Perform an ECSS inspection to detect cracking of the lower (or inner) surface of the upper bonded splice tab of the bulkhead assembly at stringers 1 through 14 (right side) and at stringers 52 through 64 (left side), in accordance with the Accomplishment Instructions of Lockheed L–1011 Service Bulletin 093–53–105, Revision 1, dated November 17, 1995; or Lockheed Service Bulletin 093–53–105, Revision 3, dated May 31, 2013. As of the effective date of this AD, use only Lockheed Service Bulletin 093–53–105, Revision 3, dated May 31, 2013, for accomplishing the actions required by this paragraph.

(i) Except as provided by paragraph (m) of this AD, if any cracking is detected at the upper bonded splice tab, repair in accordance with a method approved by the Manager, Atlanta ACO, FAA.

(ii) Except as provided by paragraph (m) of this AD, if any cracking is detected at a fastener, prior to further flight, perform a BHEC inspection to detect cracking of the forward flange of the inner tee cap, in accordance with the Accomplishment Instructions of Lockheed L–1011 Service Bulletin 093–53–105, Revision 1, dated November 17, 1995; or Lockheed Service Bulletin 093–53–105, Revision 3, dated May 31, 2013. If any cracking is detected, prior to further flight, repair in accordance with the Accomplishment Instructions of Lockheed L–1011 Service Bulletin 093–53–105, Revision 1, dated November 17, 1995; or Lockheed Service Bulletin 093–53–105, Revision 3, dated May 31, 2013, except as required by paragraph (p) of this AD. As of the effective date of this AD, use only Lockheed Service Bulletin 093–53–105, Revision 3, dated May 31, 2013, for accomplishing the actions required by this paragraph.

(k) New Revised Compliance Times for Paragraph (j) of This AD

(1) Do the initial inspections required by paragraph (j) of this AD at the earlier of the times specified in paragraphs (k)(1)(i) and (k)(1)(ii) of this AD.

(i) Prior to the accumulation of 20,000 total flight cycles, or within 30 days after January 11, 1996 (the effective date of date of AD 95–26–11, Amendment 39–9469 (60 FR 66870, December 27, 1995)), whichever occurs later.

(ii) At the later of the times specified in paragraphs (k)(1)(ii)(A) and (k)(1)(ii)(B) of this AD.

(A) Before the accumulation of 13,875 total flight cycles.

(B) Within 365 days or 1,000 flight cycles after the effective date of this AD, whichever occurs first.

(2) Repeat the inspections specified in paragraph (j) of this AD within 2,500 flight cycles after accomplishing the most recent inspection required by paragraph (j) of this AD, and repeat the inspection thereafter at intervals not to exceed 1,750 flight cycles.

(l) Retained Inspection Deferral for Paragraph (j) of This AD

This paragraph restates the requirements of paragraph (f) of AD 95–26–11, Amendment 39–9469 (60 FR 66870, December 27, 1995). Accomplishment of the initial ECSS inspections required by paragraph (j) of this AD may be deferred to a date within 120 days after January 11, 1996 (the effective date of date of AD 95–26–11), provided that, in the interim, a visual inspection as specified in paragraph (g) of this AD is accomplished within 30 days after January 11, 1996 (the effective date of date of AD 95–26–11), and repeated thereafter at intervals not to exceed 50 flight cycles. Once the ECSS inspections begin, the visual inspections may be terminated.

(m) Retained Inspection Deferral With Revised Compliance Time and New Deferral

This paragraph restates the requirements of paragraph (g) of AD 95–26–11, Amendment 39–9469 (60 FR 66870, December 27, 1995), with a revised compliance time, service information, and a new deferred action. As of the effective date of this AD, the deferral specified in paragraphs (m)(1) and (m)(2) of this AD cannot be done. If cracking was found before the effective date of this AD, the deferral specified in paragraphs (m)(1) and (m)(2) of this AD may be done. (1) If two or more adjacent fittings on both sides of the cracked fittings or bonded splice tabs/fasteners are determined to be free of cracks by the ECSS inspection required by paragraphs (j)(1) and (j)(2) of this AD, repeat the ECSS inspection of the adjacent fittings thereafter at intervals not to exceed 600 flight cycles until the cracked fittings or splice tabs/fasteners are replaced or repaired, in accordance with the Accomplishment Instructions of Lockheed L–1011 Service Bulletin 093–53–105, Revision 1, dated November 17, 1995; or Lockheed Service Bulletin 093–53–105, Revision 3, dated May 31, 2013. At the applicable time specified in paragraphs (m)(1)(i) and (m)(1)(ii) of this AD: Replace the cracked fitting and/or splice tab/fasteners, in accordance with the Accomplishment Instructions of Lockheed L–1011 Service Bulletin 093–53–105, Revision 1, dated November 17, 1995; or Lockheed Service Bulletin 093–53–105, Revision 3, dated May 31, 2013. As of the effective date of this AD, use only Lockheed Service Bulletin 093–53–105, Revision 3, dated May 31, 2013, for accomplishing the actions required by this paragraph.

(i) For any crack found before the effective date of this AD: Within 2,500 flight cycles after finding the crack.

(ii) For any crack found on or after the effective date of this AD: Before further flight after finding the crack.

(2) If two or more adjacent fittings on both sides of the cracked fittings or bonded splice tabs/fasteners are determined to be free of cracks by the ECSS inspection required by paragraphs (j)(1) and (j)(2) of this AD, the follow-on inspection (*i.e.,* BHEC, ECSS, and borescope inspections) of the inner and outer tee caps required by paragraph (j)(1) of this AD may also be deferred until the cracked fittings are replaced as required by paragraph (m)(1) of this AD, but no later than before the accumulation of 20,800 total flight cycles.

(n) New Repetitive Borescope Inspections of Certain End Fittings and Corrective Actions

For airplanes with a large (47-inch-wide) aft passenger door: At the later of the times specified in paragraphs (n)(1) and (n)(2) of this AD, do a borescope inspection for cracking of the stringer end fittings at stringer locations 12, 13, 53, and 54; and do all applicable related investigative and corrective actions; in accordance with the Accomplishment Instructions of Lockheed Service Bulletin 093–53–105, Revision 3, dated May 31, 2013, except as specified in paragraph (p) of this AD. Do all applicable related investigative and corrective actions before further flight. Repeat the inspection of the stringer end fittings thereafter at intervals not to exceed 1,750 flight cycles until the actions required by paragraph (q) of this AD have been done.

(1) Before the accumulation of 13,875 total flight cycles.

(2) Within 365 days or 1,000 flight cycles after the effective date of this AD, whichever occurs earlier.

(o) New Repetitive Borescope Inspections of Fuselage Skin Panels

For airplanes with a large (47-inch-wide) aft passenger door: At the later of the times specified in paragraphs (o)(1) and (o)(2) of this AD, do an ECSS inspection for cracking of the left and right aft fuselage skin panels; and do all applicable related investigative and corrective actions; in accordance with the Accomplishment Instructions of Lockheed Service Bulletin 093–53–105, Revision 3, dated May 31, 2013, except as specified in paragraph (p) of this AD. Do all applicable related investigative and corrective actions before further flight. Repeat the inspection of the aft fuselage skin panels thereafter at intervals not to exceed 1,750 flight cycles until the modification required by paragraph (q) of this AD is done.

(1) Before the accumulation of 13,875 total flight cycles.

(2) Within 365 days or 1,000 flight cycles after the effective date of this AD, whichever occurs first.

(p) New Service Information Exception

If any cracking is found during any inspection required by this AD, and Lockheed Service Bulletin 093–53–105, Revision 3, dated May 31, 2013, specifies contacting Lockheed for appropriate action: Before further flight, repair the cracking in accordance with a method approved by the Manager, Atlanta ACO, FAA. As of the effective date of this AD, for a repair method to be approved by the Manager, Atlanta ACO, as required by this paragraph, the Manager's approval letter must specifically refer to this AD.

(q) New Pre-Structural Modification Inspections and Structural Modification

Before the accumulation of 20,800 total flight cycles: Do the applicable actions specified in paragraphs (q)(1) and (q)(2) of this AD.

(1) Perform pre-structural modification inspections by doing the actions required by paragraphs (j), (n), and (o) of this AD.

(2) Perform a structural modification of the aft pressure bulkhead by removing and replacing all stringer end fittings with new or refurbished fittings at stringers 1 through 14, and 52 through 64, in accordance with the Accomplishment Instructions of Lockheed Service Bulletin 093–53–105, Revision 3, dated May 31, 2013.

(r) New Post-Structural Modification Repetitive Inspections

Within 13,875 flight cycles after performing the actions required by paragraph (q)(2) of this AD: Do the actions specified in paragraphs (j), (n), and (o) of this AD, and repeat thereafter at intervals not to exceed 1,750 flight cycles.

(s) No Reporting Requirement

Although Lockheed Service Bulletin 093–53–105, Revision 3, dated May 31, 2013, referenced in this AD specifies to submit certain information to the manufacturer, this AD does not include that requirement.

(t) Alternative Methods of Compliance (AMOCs)

(1) The Manager, Atlanta ACO, FAA, has the authority to approve AMOCs for this AD, if requested using the procedures found in 14 CFR 39.19. In accordance with 14 CFR 39.19, send your request to your principal inspector or local Flight Standards District Office, as appropriate. If sending information directly to the manager of the ACO, send it to the attention of the person identified in paragraph (u) of this AD.

(2) Before using any approved AMOC, notify your appropriate principal inspector, or lacking a principal inspector, the manager of the local flight standards district office/certificate holding district office.

(u) Related Information

For more information about this AD, contact Carl Gray, Aerospace Engineer, Airframe Branch, ACE–117A, FAA, Atlanta Aircraft Certification Office (ACO), 1701 Columbia Avenue, College Park, GA 30337; phone: 404–474–5554; fax: 404–474–5605; email: *carl.w.gray@faa.gov.*

(v) Material Incorporated by Reference

(1) The Director of the Federal Register approved the incorporation by reference (IBR) of the service information listed in this paragraph under 5 U.S.C. 552(a) and 1 CFR part 51.

(2) You must use this service information as applicable to do the actions required by this AD, unless the AD specifies otherwise.

(3) The following service information was approved for IBR on July 14, 2015.

(i) Lockheed Service Bulletin 093–53–105, Revision 3, dated May 31, 2013 (The date of May 15, 2013, on page 1 of Lockheed Service Bulletin 093–53–105, Revision 3, dated May 31, 2013, is incorrect and should be May 31, 2013).

(ii) Reserved.

(4) The following service information was approved for IBR on January 11, 1996 (60 FR 66870, December 27, 1995).

(i) Lockheed L–1011 Service Bulletin 093–53–105, Revision 1, dated November 17, 1995.

(ii) Reserved.

(5) For Lockheed service information identified in this AD, contact Lockheed Martin Corporation/Lockheed Martin Aeronautics Company, L1011 Technical Support Center, Dept. 6A4M, Zone 0579, 86 South Cobb Drive, Marietta, GA 30063–0579; telephone 770–494–5444; fax 770–494–5445; email *L1011.support@lmco.com;* Internet *http://www.lockheedmartin.com/ams/tools/TechPubs.html.*

(6) You may view this service information at FAA, Transport Airplane Directorate, 1601 Lind Avenue SW., Renton, WA. For information on the availability of this material at the FAA, call 425–227–1221.

(7) You may view this service information that is incorporated by reference at the National Archives and Records Administration (NARA). For information on the availability of this material at NARA, call 202–741–6030, or go to: *http://www.archives.gov/federal-register/cfr/ibr-locations.html.*

Issued in Renton, Washington, on May 18, 2015.

John P. Piccola, Jr.,

Acting Manager, Transport Airplane Directorate, Aircraft Certification Service.

[FR Doc. 2015–13325 Filed 6–8–15; 8:45 am]

BILLING CODE 4910–13–P

DEPARTMENT OF TRANSPORTATION

Federal Aviation Administration

14 CFR Part 39

[Docket No. FAA–2015–1937; Directorate Identifier 2014–SW–067–AD; Amendment 39–18171; AD 2015–11–08]

RIN 2120–AA64

Airworthiness Directives; Agusta S.p.A. (Agusta) Helicopters

AGENCY: Federal Aviation Administration (FAA), DOT.

ACTION: Final rule; request for comments.

SUMMARY: We are superseding airworthiness directive (AD) 2014–02–08 for Agusta Model A109C, A109S, A109K2, A109E, and AW109SP helicopters. AD 2014–02–08 required inspecting the lock wires securing the tail rotor (T/R) duplex bearing locking nut (locking nut) to determine whether any lock wires are missing or damaged. This AD retains some of the requirements of AD 2014–02–08 but removes the terminating action, expands the applicability, and adds a daily pilot check. This AD was prompted by reports of loosening T/R locking nuts. These actions are intended to prevent failure of the T/R and subsequent loss of control of the helicopter.

DATES: This AD becomes effective June 24, 2015.

We must receive comments on this AD by August 10, 2015.

ADDRESSES: You may send comments by any of the following methods:

- *Federal eRulemaking Docket:* Go to *http://www.regulations.gov.* Follow the online instructions for sending your comments electronically.
- *Fax:* 202–493–2251.
- *Mail:* Send comments to the U.S. Department of Transportation, Docket Operations, M–30, West Building Ground Floor, Room W12–140, 1200 New Jersey Avenue SE., Washington, DC 20590–0001.
- *Hand Delivery:* Deliver to the ''Mail'' address between 9 a.m. and 5 p.m., Monday through Friday, except Federal holidays.

Examining the AD Docket

You may examine the AD docket on the Internet at *http://www.regulations.gov* or in person at the Docket Operations Office between 9 a.m. and 5 p.m., Monday through Friday, except Federal holidays. The AD docket contains this AD, the European Aviation Safety Agency (EASA) AD, the economic evaluation, any comments

received, and other information. The street address for the Docket Operations Office (telephone 800–647–5527) is in the **ADDRESSES** section. Comments will be available in the AD docket shortly after receipt.

For service information identified in this AD, contact AgustaWestland, Product Support Engineering, Via del Gregge, 100, 21015 Lonate Pozzolo (VA) Italy, ATTN: Maurizio D'Angelo; telephone 39–0331–664757; fax 39–0331–664680; or at *http://www.agustawestland.com/technical-bulletins.* You may review the referenced service information at the FAA, Office of the Regional Counsel, Southwest Region, 2601 Meacham Blvd., Room 663, Fort Worth, Texas 76137.

FOR FURTHER INFORMATION CONTACT: Martin Crane, Aviation Safety Engineer, Safety Management Group, Rotorcraft Directorate, FAA, 2601 Meacham Blvd., Fort Worth, Texas 76137; telephone (817) 222–5110; email *martin.r.crane@faa.gov.*

SUPPLEMENTARY INFORMATION:

Comments Invited

This AD is a final rule that involves requirements affecting flight safety, and we did not provide you with notice and an opportunity to provide your comments prior to it becoming effective. However, we invite you to participate in this rulemaking by submitting written comments, data, or views. We also invite comments relating to the economic, environmental, energy, or federalism impacts that resulted from adopting this AD. The most helpful comments reference a specific portion of the AD, explain the reason for any recommended change, and include supporting data. To ensure the docket does not contain duplicate comments, commenters should send only one copy of written comments, or if comments are filed electronically, commenters should submit them only one time. We will file in the docket all comments that we receive, as well as a report summarizing each substantive public contact with FAA personnel concerning this rulemaking during the comment period. We will consider all the comments we receive and may conduct additional rulemaking based on those comments.

Discussion

On January 16, 2014, we issued AD 2014–02–08, Amendment 39–17736 (79 FR 5257, January 31, 2014) for Agusta Model A109C, A109S, and A109K2 helicopters, and certain serial-numbered Model A109E and AW109SP helicopters. AD 2014–02–08 required repetitively inspecting the lock wires securing the T/R locking nut to determine whether any lock wires are missing or damaged, installing a second lock wire if only one was installed, and reassembling the housing and slider group of the T/R rotating controls as terminating action for the inspections. AD 2014–02–08 was prompted by reports of loosening T/R locking nuts. Those actions are intended to prevent failure of the T/R and subsequent loss of control of the helicopter.

AD 2014–02–08 was prompted by AD No. 2012–0195–E, dated September 24, 2012, and corrected September 25, 2012, issued by EASA, the Technical Agent for the Member States of the European Union, to correct an unsafe condition for certain Agusta Model A109E, A109LUH, A109S, AW109SP, A109C, and A109K2 helicopters. EASA advised of the T/R locking nut loosening on Model A109 helicopters and that one or both of the lock wires securing the locking nut were either damaged or absent from the T/R. EASA states that this condition could lead to failure of the T/R function and subsequent loss of control of the helicopter. AD No. 2012–0195–E requires repetitively inspecting the lock wires and removing and reassembling the housing and slider group of the T/R rotating controls, which is terminating action for the inspections.

Actions Since AD 2014–02–08 Was Issued

Since we issued AD 2014–02–08 (79 FR 5257, January 31, 2014), a failure of a T/R duplex bearing ring nut installation occurred after the housing and slider group of the T/R rotating controls had been reassembled. Therefore, we are superseding AD 2014–02–08 to remove the reassembly as terminating action. Because of additional reports of the loosening of the bearing locking nut and the increased risk of failure of a lock wire, we are retaining the 25-hour TIS inspection. We are also requiring a daily pilot check to enhance detection of a failure of a T/R duplex bearing ring nut installation. AD 2014–02–18 did not apply to certain serial-numbered helicopters because the terminating action had already been performed on those models. Because we have determined that the terminating action does not correct the unsafe condition, we have expanded the applicability to include all serial-numbered helicopters for the Model A109C, A109S, A109K2, A109E, and AW109SP. EASA has not changed any of the requirements in its AD, and Agusta has not revised its service information.

We have also corrected the design holder's name from AgustaWestland S.p.A. to Agusta S.p.A., as specified by the current FAA type certificate.

FAA's Determination

These helicopters have been approved by the aviation authority of Italy and are approved for operation in the United States. Pursuant to our bilateral agreement with Italy, EASA, its technical representative, has notified us of the unsafe condition described in its AD. We are issuing this AD because we evaluated all known information provided by EASA and determined that an unsafe condition is likely to exist or develop on other helicopters of these same type designs.

Related Service Information

Agusta issued Bollettino Tecnico (BT) Nos. 109–134, 109EP–121, 109S–48, 109K–54, and 109SP–051, all dated September 21, 2012, for Model A109C, A109E, A109S, A109K2, and AW109SP helicopters. These BTs specify inspecting for the presence and condition of the two locking wires. The BTs also specify if one lock wire is present and no damage is reported, installing a second lock wire. The BTs specify if one or both of the lock wires are damaged, removing and disassembling the housing and slider group of the T/R controls.

AD Requirements

This AD expands the applicability to include all serial-numbered helicopters. This AD retains the initial and repetitive inspections required by AD 2014–02–08 (79 FR 5257, January 31, 2014) and retains the requirement to remove and reassemble the housing and slider group of the T/R rotating controls if one or both lock wires are damaged. This AD also requires a daily pilot check of each lock wire securing the T/R locking nut. An owner/operator (pilot) may perform the required visual check and must enter compliance with the applicable paragraph of the AD into the helicopter maintenance record in accordance with 14 CFR 43.9(a)(1) through (4) and 14 CFR 91.417(1)(2)(v). A pilot may perform this check because it involves only looking at the visible area of the lock wire securing the T/R locking nut to the housing. This check is an exception to our standard maintenance regulations.

Differences Between This AD and the EASA AD

This AD requires a daily pilot check of the lock wire, while the EASA does not. The EASA AD requires removing and reassembling the housing and slider

group of the T/R rotating controls as terminating action, regardless of whether the lock wire is damaged, and this AD does not. The EASA AD applies to certain serial-numbered helicopters, and this AD applies to all serial-numbered helicopters of each model.

Interim Action

We consider this AD to be an interim action. If final action is later identified, we might consider further rulemaking then.

Costs of Compliance

We estimate that this AD affects 122 helicopters of U.S. Registry. We estimate that operators may incur the following costs to comply with this AD. The average labor rate is estimated to be $85 per work-hour. Inspecting the lock wire takes about 0.25 work-hour, and the required parts cost is negligible, for a cost per helicopter of $22 and a total cost to U.S. operators of $2,684 per inspection cycle. Removing and reassembling the housing and slider group of the T/R rotating controls requires about 8 work-hours for a cost per helicopter of $680.

FAA's Justification and Determination of the Effective Date

Providing an opportunity for public comments prior to adopting these AD requirements would delay implementing the safety actions needed to correct this known unsafe condition. Therefore, we find that the risk to the flying public justifies waiving notice and comment prior to adopting this rule because the previously described unsafe condition can adversely affect the controllability of the helicopter. Since cases of loosening of the T/R duplex bearing locking nut continue to occur, we are requiring a daily pilot check, which must be performed within 24 hours.

Since an unsafe condition exists that requires the immediate adoption of this AD, we determined that notice and opportunity for public comment before issuing this AD are impracticable and that good cause exists for making this amendment effective in less than 30 days.

Authority for This Rulemaking

Title 49 of the United States Code specifies the FAA's authority to issue rules on aviation safety. Subtitle I, section 106, describes the authority of the FAA Administrator. ''Subtitle VII: Aviation Programs,'' describes in more detail the scope of the Agency's authority.

We are issuing this rulemaking under the authority described in ''Subtitle VII, Part A, Subpart III, Section 44701: General requirements.'' Under that section, Congress charges the FAA with promoting safe flight of civil aircraft in air commerce by prescribing regulations for practices, methods, and procedures the Administrator finds necessary for safety in air commerce. This regulation is within the scope of that authority because it addresses an unsafe condition that is likely to exist or develop on products identified in this rulemaking action.

Regulatory Findings

We determined that this AD will not have federalism implications under Executive Order 13132. This AD will not have a substantial direct effect on the States, on the relationship between the national Government and the States, or on the distribution of power and responsibilities among the various levels of government.

For the reasons discussed, I certify that this AD:

1. Is not a ''significant regulatory action'' under Executive Order 12866;
2. Is not a ''significant rule'' under DOT Regulatory Policies and Procedures (44 FR 11034, February 26, 1979);
3. Will not affect intrastate aviation in Alaska to the extent that it justifies making a regulatory distinction; and
4. Will not have a significant economic impact, positive or negative, on a substantial number of small entities under the criteria of the Regulatory Flexibility Act.

We prepared an economic evaluation of the estimated costs to comply with this AD and placed it in the AD docket.

List of Subjects in 14 CFR Part 39

Air transportation, Aircraft, Aviation safety, Incorporation by reference, Safety.

Adoption of the Amendment

Accordingly, under the authority delegated to me by the Administrator, the FAA amends 14 CFR part 39 as follows:

PART 39—AIRWORTHINESS DIRECTIVES

■ 1. The authority citation for part 39 continues to read as follows:

Authority: 49 U.S.C. 106(g), 40113, 44701.

§ 39.13 [Amended]

■ 2. The FAA amends § 39.13 by removing AD 2014–02–08, Amendment 39–17736 (79 FR 5257, January 31, 2014), and adding the following new airworthiness directive (AD):

2015–11–08 Agusta S.p.A. Helicopters (Agusta): Docket No. FAA–2015–1937; Amendment 39–18171, Directorate Identifier 2014–SW–067–AD.

(a) Applicability

This AD applies to Agusta Model A109C, A109S, A109K2, A109E, and AW109SP helicopters, certificated in any category.

(b) Unsafe Condition

This AD defines the unsafe condition as a missing or broken lock wire securing the tail rotor (T/R) duplex bearing locking nut (locking nut). This condition could result in loosening of the locking nut, failure of the T/R, and subsequent loss of control of the helicopter.

(c) Affected ADs

This AD supersedes AD 2014–02–08, Amendment 39–17736 (79 FR 5257, January 31, 2014).

(d) Comments Due Date

We must receive comments by August 10, 2015.

(e) Compliance

You are responsible for performing each action required by this AD within the specified compliance time unless it has already been accomplished prior to that time.

(f) Required Actions

(1) Within 24 hours and thereafter before the first flight of each day or at intervals not exceeding 24 hours, whichever occurs later, check each lock wire securing the T/R locking nut to the housing. The location of the housing wire is depicted in Figure 1 to paragraph (f)(1) of this AD.

BILLING CODE 4910–13–P

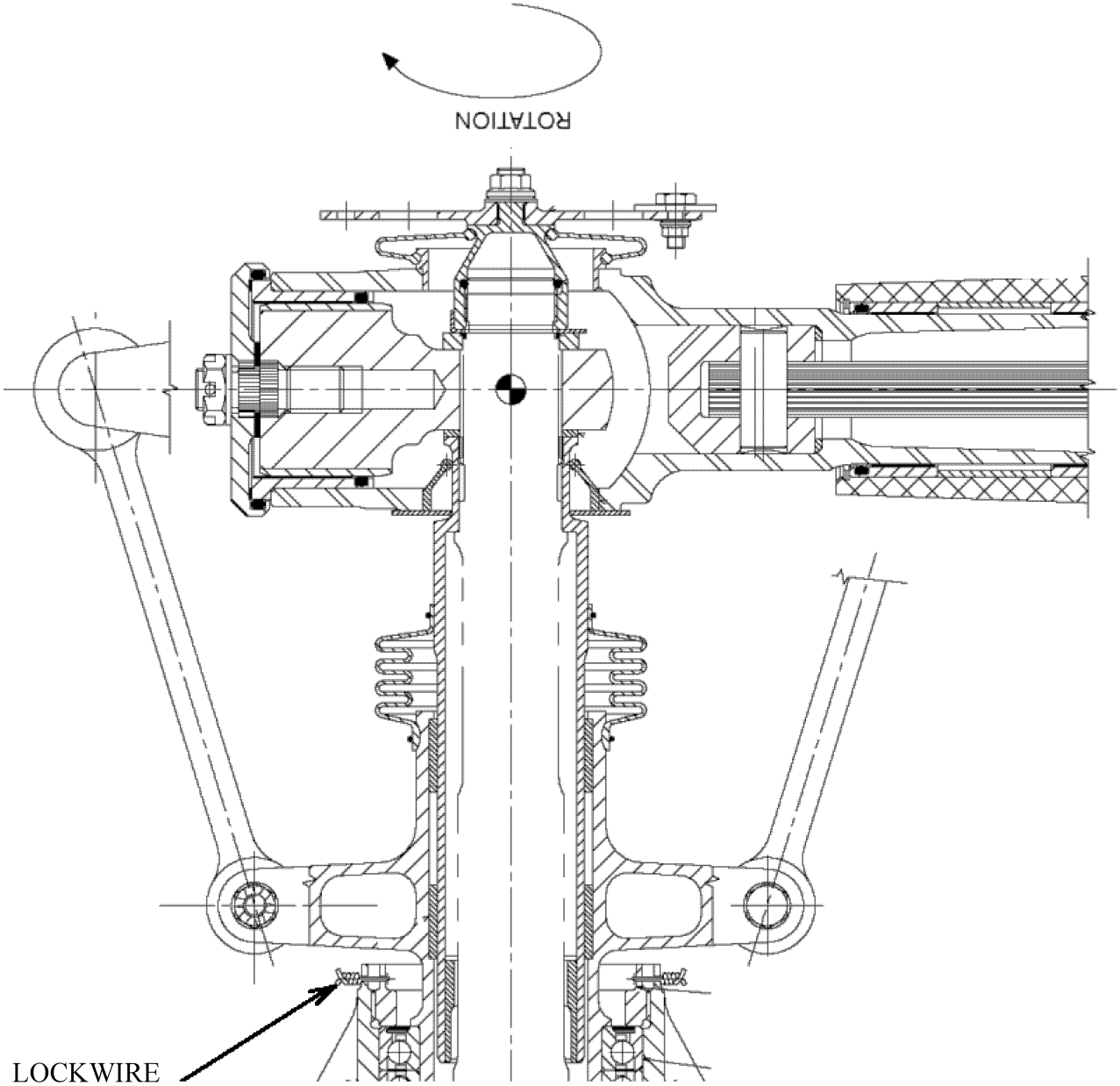

Figure 1 of paragraph (f)(1)

BILLING CODE 4910–13–C

(2) The actions required by paragraph (f)(1) may be performed by the owner/operator (pilot) holding at least a private pilot certificate and must be entered into the aircraft records showing compliance with this AD in accordance with 14 CFR 43.9(a)(1) through (4) and 14 CFR 91.417(1)(2)(v). The record must be maintained as required by 14 CFR 91.417, 121.380, or 135.439.

(3) Within 5 hours time-in-service (TIS) and thereafter at intervals not to exceed 25 hours TIS, inspect each lock wire securing the T/R locking nut to the housing.

(4) If one or both lock wires are missing or damaged, before further flight, remove and reassemble the housing and slider group of the T/R rotating controls.

(g) Special Flight Permit

Special flight permits are prohibited.

(h) Alternative Methods of Compliance (AMOCs)

(1) The Manager, Safety Management Group, FAA, may approve AMOCs for this AD. Send your proposal to: Martin Crane, Aviation Safety Engineer, Safety Management Group, Rotorcraft Directorate, FAA, 2601 Meacham Blvd., Fort Worth, Texas 76137; telephone (817) 222–5110; email *martin.r.crane@faa.gov.*

(2) For operations conducted under a 14 CFR part 119 operating certificate or under 14 CFR part 91, subpart K, we suggest that you notify your principal inspector, or lacking a principal inspector, the manager of the local flight standards district office or certificate holding district office before operating any aircraft complying with this AD through an AMOC.

(i) Additional Information

(1) Agusta Bollettino Tecnico (BT) Nos. 109–134, 109EP–121, 109S–48, 109K–54, and 109SP–051, all dated September 21, 2012, which are not incorporated by reference, contain additional information about the subject of this AD. For service information identified in this AD, contact AgustaWestland, Product Support Engineering, Via del Gregge, 100, 21015 Lonate Pozzolo (VA) Italy, ATTN: Maurizio D'Angelo; telephone 39–0331–664757; fax 39–0331–664680; or at *http://www.agustawestland.com/technical-bulletins.* You may review a copy of the

service information at the FAA, Office of the Regional Counsel, Southwest Region, 2601 Meacham Blvd., Room 663, Fort Worth, Texas 76137.

(2) The subject of this AD is addressed in European Aviation Safety Agency (EASA) AD No. 2012–0195–E, dated September 24, 2012, and corrected September 25, 2012. You may view the EASA AD on the Internet at *http://www.regulations.gov* in Docket No. FAA–2015–1937.

(k) Subject

Joint Aircraft Service Component (JASC) Code: 6400 Tail Rotor System.

Issued in Fort Worth, Texas, on May 26, 2015.

Lance T. Gant,

Acting Directorate Manager, Rotorcraft Directorate, Aircraft Certification Service.

[FR Doc. 2015–13845 Filed 6–8–15; 8:45 am]

BILLING CODE 4910–13–P

DEPARTMENT OF TRANSPORTATION

Federal Aviation Administration

14 CFR Part 39

[Docket No. FAA–2014–0754; Directorate Identifier 2014–NM–136–AD; Amendment 39–18156; AD 2015–10–01]

RIN 2120–AA64

Airworthiness Directives; Bombardier, Inc. Airplanes

AGENCY: Federal Aviation Administration (FAA), Department of Transportation (DOT).

ACTION: Final rule.

SUMMARY: We are adopting a new airworthiness directive (AD) for certain Bombardier, Inc. Model DHC–8–400 series airplanes. This AD was prompted by reports of hydraulic fluid loss from the reservoir of the main landing gear (MLG) alternate extension system. This AD requires inspection for correct assembly of the MLG alternate extension system reservoir lid, and corrective action if necessary. We are issuing this AD to, in the event of a failure of the primary MLG extension system, prevent failure of the alternate MLG extension system to fully extend the MLG into a down-and-locked position, which could result in collapse of both left-hand and right-hand MLG sides during touchdown.

DATES: This AD becomes effective July 14, 2015.

The Director of the Federal Register approved the incorporation by reference of a certain publication listed in this AD as of July 14, 2015.

ADDRESSES: You may examine the AD docket on the Internet at *http://www.regulations.gov/#!docketDetail;D=FAA-2014-0754;* or in person at the Docket Management Facility, U.S. Department of Transportation, Docket Operations, M–30, West Building Ground Floor, Room W12–140, 1200 New Jersey Avenue SE., Washington, DC.

For Bombardier service information identified in this AD, contact Bombardier, Inc., Q-Series Technical Help Desk, 123 Garratt Boulevard, Toronto, Ontario M3K 1Y5, Canada; telephone 416–375–4000; fax 416–375–4539; email *thd.qseries@aero.bombardier.com;* Internet *http://www.bombardier.com*. For Parker service information identified in this AD, contact Parker Aerospace, 14300 Alton Parkway, Irvine, CA 92618; phone: 949–833–3000; Internet: *http://www.parker.com*. You may view this referenced service information at the FAA, Transport Airplane Directorate, 1601 Lind Avenue SW., Renton, WA. For information on the availability of this material at the FAA, call 425–227–1221. It is also available on the Internet at *http://www.regulations.gov* by searching for and locating Docket No. FAA–2014–0754.

FOR FURTHER INFORMATION CONTACT: Fabio Buttitta, Aerospace Engineer, Airframe and Mechanical Systems Branch, ANE–171, FAA, New York Aircraft Certification Office (ACO), 1600 Stewart Avenue, Suite 410, Westbury, NY 11590; telephone 516–228–7303; fax 516–794–5531.

SUPPLEMENTARY INFORMATION:

Discussion

We issued a notice of proposed rulemaking (NPRM) to amend 14 CFR part 39 by adding an AD that would apply to certain Bombardier, Inc. Model DHC–8–400 series airplanes. The NPRM published in the **Federal Register** on October 23, 2014 (79 FR 63341).

Transport Canada Civil Aviation (TCCA), which is the aviation authority for Canada, has issued Canadian Airworthiness Directive CF–2014–15, dated June 6, 2014 (referred to after this as the Mandatory Continuing Airworthiness Information, or ''the MCAI''), to correct an unsafe condition for certain Bombardier, Inc. Model DHC–8–400 series airplanes. The MCAI states:

> Several cases have been reported of hydraulic fluid loss from the main landing gear (MLG) alternate extension system reservoir and in one case, the reservoir was found empty. The cause was determined to be an incorrectly assembled reservoir lid. In the event of a failed primary MLG extension system, an alternate MLG extension system with an empty reservoir may not be able to fully extend the MLG into the down and locked position, resulting in an unsafe landing configuration.
>
> This [Canadian] AD mandates the [general visual] inspection of the MLG alternate extension system reservoir lid for correct assembly and the required rectification [*i.e.,* corrective action which consists of repairing the lid assembly].

You may examine the MCAI in the AD docket on the Internet at *http://www.regulations.gov/#!documentDetail;D=FAA-2014-0754-0002*.

Comments

We gave the public the opportunity to participate in developing this AD. We received no comments on the NPRM (79 FR 63341, October 23, 2014) or on the determination of the cost to the public.

Conclusion

We reviewed the relevant data and determined that air safety and the public interest require adopting this AD as proposed except for minor editorial changes. We have determined that these minor changes:

- Are consistent with the intent that was proposed in the NPRM (79 FR 63341, October 23, 2014) for correcting the unsafe condition; and
- Do not add any additional burden upon the public than was already proposed in the NPRM (79 FR 63341, October 23, 2014).

Related Service Information Under 1 CFR Part 51

Bombardier has issued Service Bulletin 84–29–34, dated May 9, 2013, with the attached Parker Service Bulletin 82910012–29–431, dated October 22, 2012. This service information describes procedures to inspect the lid assembly of the MLG alternate extension system reservoir for correct assembly and corrective actions. This service information is reasonably available because the interested parties have access to it through their normal course of business or by the means identified in the **ADDRESSES** section of this AD.

Costs of Compliance

We estimate that this AD affects 173 airplanes of U.S. registry.

We also estimate that it will take about 4 work-hours per product to comply with the basic requirements of this AD. The average labor rate is $85 per work-hour. Based on these figures, we estimate the cost of this AD on U.S. operators to be $58,820, or $340 per product.

In addition, we estimate that any necessary follow-on actions will take

about 2 work-hours and require parts costing $0, for a cost of $170 per product. We have no way of determining the number of aircraft that might need this action.

Authority for This Rulemaking

Title 49 of the United States Code specifies the FAA's authority to issue rules on aviation safety. Subtitle I, section 106, describes the authority of the FAA Administrator. ''Subtitle VII: Aviation Programs,'' describes in more detail the scope of the Agency's authority.

We are issuing this rulemaking under the authority described in ''Subtitle VII, Part A, Subpart III, Section 44701: General requirements.'' Under that section, Congress charges the FAA with promoting safe flight of civil aircraft in air commerce by prescribing regulations for practices, methods, and procedures the Administrator finds necessary for safety in air commerce. This regulation is within the scope of that authority because it addresses an unsafe condition that is likely to exist or develop on products identified in this rulemaking action.

Regulatory Findings

We determined that this AD will not have federalism implications under Executive Order 13132. This AD will not have a substantial direct effect on the States, on the relationship between the national government and the States, or on the distribution of power and responsibilities among the various levels of government.

For the reasons discussed above, I certify that this AD:

1. Is not a ''significant regulatory action'' under Executive Order 12866;

2. Is not a ''significant rule'' under the DOT Regulatory Policies and Procedures (44 FR 11034, February 26, 1979);

3. Will not affect intrastate aviation in Alaska; and

4. Will not have a significant economic impact, positive or negative, on a substantial number of small entities under the criteria of the Regulatory Flexibility Act.

Examining the AD Docket

You may examine the AD docket on the Internet at *http://www.regulations.gov/#!docketDetail;D=FAA-2014-0754;* or in person at the Docket Management Facility between 9 a.m. and 5 p.m., Monday through Friday, except Federal holidays. The AD docket contains this AD, the regulatory evaluation, any comments received, and other information. The street address for the Docket Operations office (telephone 800–647–5527) is in the **ADDRESSES** section.

List of Subjects in 14 CFR Part 39

Air transportation, Aircraft, Aviation safety, Incorporation by reference, Safety.

Adoption of the Amendment

Accordingly, under the authority delegated to me by the Administrator, the FAA amends 14 CFR part 39 as follows:

PART 39—AIRWORTHINESS DIRECTIVES

■ 1. The authority citation for part 39 continues to read as follows:

Authority: 49 U.S.C. 106(g), 40113, 44701.

§ 39.13 [Amended]

■ 2. The FAA amends § 39.13 by adding the following new airworthiness directive (AD):

2015–10–01 Bombardier, Inc.: Amendment 39–18156. Docket No. FAA–2014–0754; Directorate Identifier 2014–NM–136–AD.

(a) Effective Date

This AD becomes effective July 14, 2015.

(b) Affected ADs

None.

(c) Applicability

This AD applies to Bombardier, Inc. Model DHC–8–401, –402, and –403 airplanes, certificated in any category, serial numbers 4001 through 4424 inclusive.

(d) Subject

Air Transport Association (ATA) of America Code 29, Hydraulic Power.

(e) Reason

This AD was prompted by reports of hydraulic fluid loss from the reservoir of the main landing gear (MLG) alternate extension system. We are issuing this AD to, in the event of a failure of the primary MLG extension system, prevent failure of the alternate MLG extension system to fully extend the MLG into a down-and-locked position, which could result in collapse of both left-hand and right-hand MLG sides during touchdown.

(f) Compliance

Comply with this AD within the compliance times specified, unless already done.

(g) Inspection and Corrective Action

Within 2,000 flight hours or 12 months after the effective date of this AD, whichever occurs first: Do a general visual inspection of the MLG alternate extension system reservoir lid for correct assembly, and do all applicable corrective actions, in accordance with the Accomplishment Instructions of Bombardier Service Bulletin 84–29–34, dated May 9, 2013, and with the attached Parker Service Bulletin 82910012–29–431, dated October 22, 2012, as referenced in Bombardier Service Bulletin 84–29–34, dated May 9, 2013. Do all applicable corrective actions within 2,000 flight hours or 12 months after the effective date of this AD, whichever occurs first.

(h) Credit for Previous Actions

This paragraph provides credit for actions required by paragraph (g) of this AD, if those actions were performed before the effective date of this AD using Bombardier All Operator Message 543, dated October 17, 2012, which is not incorporated by reference in this AD.

(i) Other FAA AD Provisions

The following provisions also apply to this AD:

(1) *Alternative Methods of Compliance (AMOCs):* The Manager, New York Aircraft Certification Office (ACO), ANE–170, FAA, has the authority to approve AMOCs for this AD, if requested using the procedures found in 14 CFR 39.19. In accordance with 14 CFR 39.19, send your request to your principal inspector or local Flight Standards District Office, as appropriate. If sending information directly to the ACO, send it to ATTN: Program Manager, Continuing Operational Safety, FAA, New York ACO, 1600 Stewart Avenue, Suite 410, Westbury, NY 11590; telephone 516–228–7300; fax 516–794–5531. Before using any approved AMOC, notify your appropriate principal inspector, or lacking a principal inspector, the manager of the local flight standards district office/certificate holding district office. The AMOC approval letter must specifically reference this AD.

(2) *Contacting the Manufacturer:* For any requirement in this AD to obtain corrective actions from a manufacturer, the action must be accomplished using a method approved by the Manager, New York ACO, ANE–170, FAA; or Transport Canada Civil Aviation (TCCA); or Bombardier, Inc.'s TCCA Design Approval Organization (DAO). If approved by the DAO, the approval must include the DAO-authorized signature.

(j) Related Information

(1) Refer to Mandatory Continuing Airworthiness Information (MCAI) Canadian Airworthiness Directive CF–2014–15, dated June 6, 2014, for related information. This MCAI may be found in the AD docket on the Internet at *http://www.regulations.gov/#!documentDetail;D=FAA-2014-0754-0002*.

(2) Service information identified in this AD that is not incorporated by reference is available at the addresses specified in paragraphs (k)(3) and (k)(5) of this AD.

(k) Material Incorporated by Reference

(1) The Director of the Federal Register approved the incorporation by reference (IBR) of the service information listed in this paragraph under 5 U.S.C. 552(a) and 1 CFR part 51.

(2) You must use this service information as applicable to do the actions required by this AD, unless this AD specifies otherwise.

(i) Bombardier Service Bulletin 84–29–34, dated May 9, 2013.

(ii) Parker Service Bulletin 82910012–29–431, dated October 22, 2012.

(3) For Bombardier service information identified in this AD, contact Bombardier, Inc., Q-Series Technical Help Desk, 123 Garratt Boulevard, Toronto, Ontario M3K 1Y5, Canada; telephone 416–375–4000; fax 416–375–4539; email *thd.qseries@aero.bombardier.com;* Internet *http://www.bombardier.com.*

(4) For Parker service information identified in this AD, contact Parker Aerospace, 14300 Alton Parkway, Irvine, CA, 92618; phone: 949–833–3000; Internet: *http://www.parker.com.*

(5) You may view this service information at the FAA, Transport Airplane Directorate, 1601 Lind Avenue SW., Renton, WA. For information on the availability of this material at the FAA, call 425–227–1221.

(6) You may view this service information that is incorporated by reference at the National Archives and Records Administration (NARA). For information on the availability of this material at NARA, call 202–741–6030, or go to: *http://www.archives.gov/federal-register/cfr/ibr-locations.html.*

Issued in Renton, Washington, on May 1, 2015.

Jeffrey E. Duven,

Manager, Transport Airplane Directorate, Aircraft Certification Service.

[FR Doc. 2015–11389 Filed 6–8–15; 8:45 am]

BILLING CODE 4910–13–P

DEPARTMENT OF TRANSPORTATION

Federal Aviation Administration

14 CFR Part 39

[Docket No. FAA–2015–1936; Directorate Identifier 2014–SW–005–AD; Amendment 39–18170; AD 2015–11–07]

RIN 2120–AA64

Airworthiness Directives; Agusta S.p.A. Helicopters

AGENCY: Federal Aviation Administration (FAA), Department of Transportation (DOT).

ACTION: Final rule; request for comments.

SUMMARY: We are adopting a new airworthiness directive (AD) for certain Agusta S.p.A. Model AB412 and AB412 EP helicopters. This AD requires inspecting the tail rotor (T/R) drive shaft flanged adapter (adapter) for a crack and removing the adapter from service if there is a crack. This AD is prompted by a report of a crack found in an adapter. These actions are intended to detect a crack in the adapter and prevent failure of the T/R drive shaft, which could result in reduced control of the helicopter.

DATES: This AD becomes effective June 24, 2015.

The Director of the Federal Register approved the incorporation by reference of a certain document listed in this AD as of June 24, 2015.

We must receive comments on this AD by August 10, 2015.

ADDRESSES: You may send comments by any of the following methods:

- *Federal eRulemaking Docket:* Go to *http://www.regulations.gov.* Follow the online instructions for sending your comments electronically.
- *Fax:* 202–493–2251.
- *Mail:* Send comments to the U.S. Department of Transportation, Docket Operations, M–30, West Building Ground Floor, Room W12–140, 1200 New Jersey Avenue SE., Washington, DC 20590–0001.
- *Hand Delivery:* Deliver to the ''Mail'' address between 9 a.m. and 5 p.m., Monday through Friday, except Federal holidays.

Examining the AD Docket

You may examine the AD docket on the Internet at *http://www.regulations.gov* or in person at the Docket Operations Office between 9 a.m. and 5 p.m., Monday through Friday, except Federal holidays. The AD docket contains this AD, the European Aviation Safety Agency (EASA) Emergency AD (EAD), any incorporated by reference service information, any comments received, and other information. The street address for the Docket Operations Office (telephone 800- 647–5527) is in the **ADDRESSES** section. Comments will be available in the AD docket shortly after receipt.

For service information identified in this AD, contact AgustaWestland, Product Support Engineering, Via del Gregge, 100, 21015 Lonate Pozzolo (VA) Italy, ATTN: Maurizio D'Angelo; telephone 39–0331–664757; fax 39–0331–664680; or at *http://www.agustawestland.com/technical-bulletins.* You may review the referenced service information at the FAA, Office of the Regional Counsel, Southwest Region, 2601 Meacham Blvd., Room 663, Fort Worth, Texas 76137. It is also available on the Internet at *http://www.regulations.gov* in Docket No. FAA–2015–1936.

FOR FURTHER INFORMATION CONTACT: Robert Grant, Aviation Safety Engineer, Safety Management Group, FAA, 2601 Meacham Blvd., Fort Worth, Texas 76137; telephone (817) 222–5110; email *robert.grant@faa.gov.*

SUPPLEMENTARY INFORMATION:

Comments Invited

This AD is a final rule that involves requirements affecting flight safety, and we did not provide you with notice and an opportunity to provide your comments prior to it becoming effective. However, we invite you to participate in this rulemaking by submitting written comments, data, or views. We also invite comments relating to the economic, environmental, energy, or federalism impacts that resulted from adopting this AD. The most helpful comments reference a specific portion of the AD, explain the reason for any recommended change, and include supporting data. To ensure the docket does not contain duplicate comments, commenters should send only one copy of written comments, or if comments are filed electronically, commenters should submit them only one time. We will file in the docket all comments that we receive, as well as a report summarizing each substantive public contact with FAA personnel concerning this rulemaking during the comment period. We will consider all the comments we receive and may conduct additional rulemaking based on those comments.

Discussion

This AD action was prompted by EAD No. 2014–0040–E, dated February 19, 2014, issued by EASA, which is the Technical Agent for the Member States of the European Union, to correct an unsafe condition for certain AgustaWestland S.p.A. Model AB 412 and AB 412 EP helicopters. EASA advises that a crack was found in an adapter, part number (P/N) 412–040–622–101, installed on a Model AB 412 EP helicopter. EASA further advises that the condition, if not detected and corrected, could lead to T/R drive shaft failure, possibly resulting in reduced control of the helicopter. To address this unsafe condition, the EASA EAD requires repetitive inspections of adapters, P/N 412–040–622–101 and P/N 412–040–623–101, for a crack and replacing a cracked adapter. EASA also requires reporting and sending the cracked adapter to AgustaWestland for investigation.

FAA's Determination

These helicopters have been approved by the aviation authority of Italy and are approved for operation in the United States. Pursuant to our bilateral agreement with Italy, the EASA, its technical representative, has notified us of the unsafe condition described in the EASA AD. We are issuing this AD because we evaluated all information provided by the EASA and determined the unsafe condition exists and is likely to exist or develop on other helicopters of these same type designs.

Related Service Information Under 1 CFR Part 51

AgustaWestland issued Bollettino Tecnico No. 412–139, dated February 19, 2014 (BT), for Model AB412 helicopters serial number (S/N) 25801 through 25900, and Model AB412EP helicopters S/N 25901 and subsequent. The BT states AgustaWestland received a report of a crack in an adapter, P/N 412–040–622–101, installed on a Model AB412EP helicopter. The BT also states that the investigation to determine the root causes of the crack is in progress and the BT may be revised according to the investigation results. The BT specifies a one-time inspection of the adapter, P/N 412–040–622–101 and P/N 412–040–623–101, for the presence of cracks, and if there is a crack, replacing the drive shaft assembly. The BT also specifies reporting a cracked adapter and sending affected parts to AgustaWestland. This service information is reasonably available because the interested parties have access to it through their normal course of business or by the means identified in the **ADDRESSES** section of this AD.

AD Requirements

This AD requires an initial and recurring visual inspection of the adapter, P/N 412–040–622–101 and P/N 412–040–623–101, installed on certain Model AB412 and AB412 EP helicopters. If there is a crack in an adapter, this AD requires removing the adapter from service before further flight. This AD also requires visually inspecting an adapter before installation.

Differences Between This AD and the EASA EAD

The EASA EAD requires reporting and sending any cracked adapter to AgustaWestland, whereas this AD does not.

Interim Action

We consider this AD to be an interim action. If final action is later identified, we might consider further rulemaking then.

Costs of Compliance

There are no costs of compliance with this AD because there are no helicopters with this type certificate on the U.S. Registry.

FAA's Justification and Determination of the Effective Date

There are no helicopters with this type certificate on the U.S. Registry. Therefore, we believe it is unlikely that we will receive any adverse comments or useful information about this AD from U.S. Operators.

Since an unsafe condition exists that requires the immediate adoption of this AD, we determined that notice and opportunity for public comment before issuing this AD are unnecessary because there are none of these helicopters on the U.S. Registry and that good cause exists for making this amendment effective in less than 30 days.

Authority for This Rulemaking

Title 49 of the United States Code specifies the FAA's authority to issue rules on aviation safety. Subtitle I, section 106, describes the authority of the FAA Administrator. ''Subtitle VII: Aviation Programs,'' describes in more detail the scope of the Agency's authority.

We are issuing this rulemaking under the authority described in ''Subtitle VII, Part A, Subpart III, Section 44701: General requirements.'' Under that section, Congress charges the FAA with promoting safe flight of civil aircraft in air commerce by prescribing regulations for practices, methods, and procedures the Administrator finds necessary for safety in air commerce. This regulation is within the scope of that authority because it addresses an unsafe condition that is likely to exist or develop on products identified in this rulemaking action.

Regulatory Findings

We determined that this AD will not have federalism implications under Executive Order 13132. This AD will not have a substantial direct effect on the States, on the relationship between the national Government and the States, or on the distribution of power and responsibilities among the various levels of government.

For the reasons discussed, I certify that this AD:

1. Is not a ''significant regulatory action'' under Executive Order 12866;

2. Is not a ''significant rule'' under DOT Regulatory Policies and Procedures (44 FR 11034, February 26, 1979);

3. Will not affect intrastate aviation in Alaska to the extent that it justifies making a regulatory distinction; and

4. Will not have a significant economic impact, positive or negative, on a substantial number of small entities under the criteria of the Regulatory Flexibility Act.

List of Subjects in 14 CFR Part 39

Air transportation, Aircraft, Aviation safety, Incorporation by reference, Safety.

Adoption of the Amendment

Accordingly, under the authority delegated to me by the Administrator, the FAA amends 14 CFR part 39 as follows:

PART 39—AIRWORTHINESS DIRECTIVES

■ 1. The authority citation for part 39 continues to read as follows:

Authority: 49 U.S.C. 106(g), 40113, 44701.

§ 39.13 [Amended]

■ 2. The FAA amends § 39.13 by adding the following new airworthiness directive (AD):

2015–11–07 Agusta S.p.A.: Amendment 39–18170; Docket No. FAA–2015–1936; Directorate Identifier 2014–SW–005–AD.

(a) Applicability

This AD applies to Model AB412 helicopters with a serial number (S/N) 25801 through 25900, and Model AB412 EP helicopters with a S/N 25901 and larger, certificated in any category.

(b) Unsafe Condition

This AD defines the unsafe condition as a crack in a tail rotor (T/R) drive shaft flanged adapter. This condition could result in failure of the T/R drive shaft and reduced control of the helicopter.

(c) Effective Date

This AD becomes effective June 24, 2015.

(d) Compliance

You are responsible for performing each action required by this AD within the specified compliance time unless it has already been accomplished prior to that time.

(e) Required Actions

(1) Within 5 hours time-in-service (TIS) and thereafter at intervals not to exceed 100 hours TIS, using a 5X power magnifying glass and a light source, visually inspect each flanged adapter, part number (P/N) 412–040–622–101 and P/N 412–040–623–101, for a crack as shown in Figures 1 and 2 of AgustaWestland Bollettino Tecnico No. 412–139, dated February 19, 2014.

(2) If there is a crack in a flanged adapter, before further flight, remove the flanged adapter from service.

(3) Do not install a flanged adapter, P/N 412–040–622–101 or P/N 412–040–623–101, unless it has been inspected in accordance with the requirements of paragraphs (e)(1) and (e)(2) of this AD.

(f) Special Flight Permits

Special flight permits are prohibited.

(g) Alternative Methods of Compliance (AMOCs)

(1) The Manager, Safety Management Group, FAA, may approve AMOCs for this AD. Send your proposal to: Robert Grant, Aviation Safety Engineer, Safety Management Group, FAA, 2601 Meacham Blvd., Fort Worth, Texas 76137; telephone (817) 222–5110; email *robert.grant@faa.gov.*

(2) For operations conducted under a 14 CFR part 119 operating certificate or under 14 CFR part 91, subpart K, we suggest that you notify your principal inspector, or lacking a principal inspector, the manager of the local flight standards district office or certificate holding district office, before operating any aircraft complying with this AD through an AMOC.

(h) Additional Information

The subject of this AD is addressed in European Aviation Safety Agency (EASA) Emergency AD (EAD) No. 2014–0040–E, dated February 19, 2014. You may view the EASA EAD on the Internet at *http://www.regulations.gov* in Docket No. FAA–2015–1936.

(i) Subject

Joint Aircraft Service Component (JASC) Code: 6510, Tail Rotor Drive Shaft.

(j) Material Incorporated by Reference

(1) The Director of the Federal Register approved the incorporation by reference of the service information listed in this paragraph under 5 U.S.C. 552(a) and 1 CFR part 51.

(2) You must use this service information as applicable to do the actions required by this AD, unless the AD specifies otherwise.

(i) AgustaWestland Bollettino Tecnico No. 412–139, dated February 19, 2014.

(ii) Reserved.

(3) For AgustaWestland service information identified in this AD, contact AgustaWestland, Product Support Engineering, Via del Gregge, 100, 21015 Lonate Pozzolo (VA) Italy, ATTN: Maurizio D'Angelo; telephone 39–0331–664757; fax 39–0331–664680; or at *http://www.agustawestland.com/technical-bulletins.*

(4) You may view this service information at FAA, Office of the Regional Counsel, Southwest Region, 2601 Meacham Blvd., Room 663, Fort Worth, Texas 76137. For information on the availability of this material at the FAA, call (817) 222–5110.

(5) You may view this service information that is incorporated by reference at the National Archives and Records Administration (NARA). For information on the availability of this material at NARA, call (202) 741–6030, or go to: *http://www.archives.gov/federal-register/cfr/ibr-locations.html.*

Issued in Fort Worth, Texas, on May 26, 2015.

Lance T. Gant,

Acting Directorate Manager, Rotorcraft Directorate, Aircraft Certification Service.

[FR Doc. 2015–13343 Filed 6–8–15; 8:45 am]

BILLING CODE 4910–13–P

DEPARTMENT OF TRANSPORTATION

Federal Aviation Administration

14 CFR Part 39

[Docket No. FAA–2014–0568; Directorate Identifier 2014–NM–075–AD; Amendment 39–18166; AD 2015–11–03]

RIN 2120–AA64

Airworthiness Directives; ATR–GIE Avions de Transport Régional Airplanes

AGENCY: Federal Aviation Administration (FAA), Department of Transportation (DOT).

ACTION: Final rule.

SUMMARY: We are adopting a new airworthiness directive (AD) for certain ATR–GIE Avions de Transport Régional Model ATR42 and ATR72 airplanes. This AD was prompted by reports of fuel quantity indication malfunctions caused by fuel probe failure. This AD requires identifying the part number and serial number of the fuel probes, and replacing the fuel probes if necessary. We are issuing this AD to prevent fuel probe failure, which could lead to undetected fuel starvation and consequent dual engine in-flight flame-out.

DATES: This AD becomes effective July 14, 2015.

The Director of the Federal Register approved the incorporation by reference of a certain publication listed in this AD as of July 14, 2015.

ADDRESSES: You may examine the AD docket on the Internet at *http://www.regulations.gov/#!docketDetail;D=FAA-2014-0568* or in person at the Docket Management Facility, U.S. Department of Transportation, Docket Operations, M–30, West Building Ground Floor, Room W12–140, 1200 New Jersey Avenue SE., Washington, DC.

For service information identified in this AD, contact Zodiac Aerospace, Technical Publication Department, 61 Rue Pierre Curie—CS20001, 78373 Plaisir Cedex, France; phone: +33 (0)1 61 34 19 24; fax: +33 (0)1 61 34 21 13; email: *yann.laine@zodiacaerospace.com*; Internet: *http://www.zodiacaerospace.com.*

You may view this referenced service information at the FAA, Transport Airplane Directorate, 1601 Lind Avenue SW., Renton, WA. For information on the availability of this material at the FAA, call 425–227–1221. You can find this information at *http://www.regulations.gov* by searching for and locating Docket No. FAA–2014–0568.

FOR FURTHER INFORMATION CONTACT: Tom Rodriguez, Aerospace Engineer, International Branch, ANM–116, Transport Airplane Directorate, FAA, 1601 Lind Avenue SW., Renton, WA 98057–3356; telephone 425–227–1137; fax 425–227–1149.

SUPPLEMENTARY INFORMATION:

Discussion

We issued a notice of proposed rulemaking (NPRM) to amend 14 CFR part 39 by adding an AD that would apply to certain ATR–GIE Avions de Transport Régional Model ATR42 and ATR72 airplanes. The NPRM published in the **Federal Register** on August 15, 2014 (79 FR 48107). The NPRM was prompted by reports of fuel quantity indication malfunctions caused by fuel probe failure. The NPRM proposed to require identifying the part number and serial number of the fuel probes, and replacing the probes if necessary. We are issuing this AD to prevent fuel probe failure, which could lead to undetected fuel starvation and consequent dual engine in-flight flame-out.

The European Aviation Safety Agency (EASA), which is the Technical Agent for the Member States of the European Union, has issued EASA Airworthiness Directive 2014–0075R1, dated April 24, 2014 (referred to after this as the Mandatory Continuing Airworthiness Information, or ''the MCAI''), to correct an unsafe condition on certain ATR–GIE Avions de Transport Régional Model ATR42 and ATR72 airplanes. The MCAI states:

> A significant number of fuel probes installed on ATR aeroplanes failed during production tests and several occurrences of fuel quantity indication malfunctions were recently reported on in-service aeroplanes.
>
> The subsequent investigation, conducted on the failed parts, confirmed a loss of ground connection on the terminal block of the fuel probe, due to an incorrect application of wiring instructions in production during fuel probe manufacturing between June 2011 and August 2013. The investigation identified a batch of parts, suspected to be affected by this manufacturing defect. Some of these probes were delivered as spares, and operators may have installed these probes on their in-service aeroplanes.
>
> In case an affected fuel probe is installed on each wing of an aeroplane, being not equipped with an independent fuel low level measurement system or an aeroplane operated in accordance with ETOPS [extended range twin operations] rules, the defected fuel probes could indicate a higher fuel quantity value than the real quantity of the on-board fuel.
>
> This condition, if not detected and corrected, could lead to an undetected fuel starvation and consequent dual engine in-flight flame out.

For the reasons described above, this [EASA] AD requires the identification and replacement of the affected fuel probes.

This [EASA] AD is revised to correct typographical errors.

You may examine the MCAI in the AD docket on the Internet at *http://www.regulations.gov/#!documentDetail;D=FAA-2014-0568-0002*.

Comments

We gave the public the opportunity to participate in developing this AD. The following presents the comment received on the NPRM (79 FR 48107, August 15, 2014) and the FAA's response to the comment.

Request To Use the Latest Service Information

Empire Airlines requested that we revise the NPRM (79 FR 48107, August 15, 2014) to include revised service information. Zodiac Aerospace issued Service Bulletin 766983–28–002, Revision 1, dated March 24, 2014, to correct certain part numbers. Empire stated that this change will negate the necessity for an alternative method of compliance request.

We agree to include the latest service information in this AD, although the correct part numbers were identified in table 1 to paragraph (g) in the NPRM (79 FR 48107, August 15, 2014), which will remain in this AD. We have also added new paragraph (k) in this AD to allow the use, before the effective date of this AD, of Zodiac Aerospace Service Bulletin 766983–28–002, dated October 15, 2013, for identifying part numbers to define serviceable parts. We have redesignated subsequent paragraphs accordingly.

Additional Changes to This AD

We have revised the NPRM (79 FR 48107, August 15, 2014) to include the most updated contact information for the service information required by this AD, which is: Zodiac Aerospace, Technical Publication Department, 61 Rue Pierre Curie—CS20001, 78373 Plaisir Cedex, France; phone: +33 (0)1 61 34 19 24; fax: +33 (0)1 61 34 21 13; email: *yann.laine@zodiacaerospace.com*; Internet: *http://www.zodiacaerospace.com*.

We have revised the NPRM (79 FR 48107, August 15, 2014) by removing ''Services Europe'' from the service information citations, which does not need to be included in the service information citations in this AD.

Conclusion

We reviewed the relevant data, considered the comment received, and determined that air safety and the public interest require adopting this AD with the changes described previously and minor editorial changes. We have determined that these minor changes:

- Are consistent with the intent that was proposed in the NPRM (79 FR 48107, August 15, 2014) for correcting the unsafe condition; and
- Do not add any additional burden upon the public than was already proposed in the NPRM (79 FR 48107, August 15, 2014).

We also determined that these changes will not increase the economic burden on any operator or increase the scope of this AD.

Related Service Information Under 1 CFR Part 51

Zodiac Aerospace has issued Service Bulletin 766983–28–002, Revision 1, dated March 24, 2014. The service information describes procedures for an inspection for a potential splice conductor soldering defect, and installing a new splice conductor. The actions described in this service information are intended to correct the unsafe condition identified in the MCAI. This service information is reasonably available because the interested parties have access to it through their normal course of business or by the means identified in the **ADDRESSES** section of this AD.

Costs of Compliance

We estimate that this AD affects 81 airplanes of U.S. registry.

We also estimate that it will take about 2 work-hours per product to comply with the basic requirements of this AD. The average labor rate is $85 per work-hour. Required parts will cost about $0 per product. Based on these figures, we estimate the cost of this AD on U.S. operators to be $13,770, or $170 per product.

According to the manufacturer, some of the costs of this AD may be covered under warranty, thereby reducing the cost impact on affected individuals. We do not control warranty coverage for affected individuals. As a result, we have included all costs in our cost estimate.

Authority for This Rulemaking

Title 49 of the United States Code specifies the FAA's authority to issue rules on aviation safety. Subtitle I, section 106, describes the authority of the FAA Administrator. ''Subtitle VII: Aviation Programs,'' describes in more detail the scope of the Agency's authority.

We are issuing this rulemaking under the authority described in ''Subtitle VII, Part A, Subpart III, Section 44701: General requirements.'' Under that section, Congress charges the FAA with promoting safe flight of civil aircraft in air commerce by prescribing regulations for practices, methods, and procedures the Administrator finds necessary for safety in air commerce. This regulation is within the scope of that authority because it addresses an unsafe condition that is likely to exist or develop on products identified in this rulemaking action.

Regulatory Findings

We determined that this AD will not have federalism implications under Executive Order 13132. This AD will not have a substantial direct effect on the States, on the relationship between the national government and the States, or on the distribution of power and responsibilities among the various levels of government.

For the reasons discussed above, I certify that this AD:

1. Is not a ''significant regulatory action'' under Executive Order 12866;

2. Is not a ''significant rule'' under the DOT Regulatory Policies and Procedures (44 FR 11034, February 26, 1979);

3. Will not affect intrastate aviation in Alaska; and

4. Will not have a significant economic impact, positive or negative, on a substantial number of small entities under the criteria of the Regulatory Flexibility Act.

Examining the AD Docket

You may examine the AD docket on the Internet at *http://www.regulations.gov/#!docketDetail;D=FAA-2014-0568*; or in person at the Docket Management Facility between 9 a.m. and 5 p.m., Monday through Friday, except Federal holidays. The AD docket contains this AD, the regulatory evaluation, any comments received, and other information. The street address for the Docket Operations office (telephone 800–647–5527) is in the **ADDRESSES** section.

List of Subjects in 14 CFR Part 39

Air transportation, Aircraft, Aviation safety, Incorporation by reference, Safety.

Adoption of the Amendment

Accordingly, under the authority delegated to me by the Administrator, the FAA amends 14 CFR part 39 as follows:

PART 39—AIRWORTHINESS DIRECTIVES

■ 1. The authority citation for part 39 continues to read as follows:

Authority: 49 U.S.C. 106(g), 40113, 44701.

§ 39.13 [Amended]

■ 2. The FAA amends § 39.13 by adding the following new airworthiness directive (AD):

2015–11–03 ATR–GIE Avions de Transport Régional: Amendment 39–18166. Docket No. FAA–2014–0568; Directorate Identifier 2014–NM–075–AD.

(a) Effective Date

This AD becomes effective July 14, 2015.

(b) Affected ADs

None.

(c) Applicability

This AD applies to the airplanes identified in paragraphs (c)(1), (c)(2), and (c)(3) of this AD.

(1) ATR–GIE Avions de Transport Régional Model ATR42–200, –300, –320, and –500 airplanes; and Model ATR72–101, –201, –102, –202, –211, –212, and –212A airplanes; certificated in any category; all manufacturer serial numbers qualified for extended range twin operations (ETOPS) with ATR Modification 04711.

(2) ATR–GIE Avions de Transport Régional Model ATR42–200, –300, –320, and –500 airplanes; certificated in any category; except as specified in paragraph (c)(2)(i) or (c)(2)(ii) of this AD.

(i) Airplanes modified with ATR Modification 04650.

(ii) Airplanes retrofitted as specified in ATR Service Bulletin ATR42–28–0033 or ATR42–28–0034, as applicable.

(3) ATR–GIE Avions de Transport Régional Model ATR72–101, –201, –102, –202, –211, –212, and –212A airplanes; certificated in any category; all manufacturer serial numbers; except as specified in paragraph (c)(3)(i) or (c)(3)(ii) of this AD.

(i) Airplanes modified with ATR Modification 04686.

(ii) Airplanes retrofitted as specified in ATR Service Bulletin ATR72–28–1013, ATR72–28–1022, or ATR72–28–1023, as applicable.

(d) Subject

Air Transport Association (ATA) of America Code 28, Fuel.

(e) Reason

This AD was prompted by reports of fuel quantity indication malfunctions caused by fuel probe failure. We are issuing this AD to detect and correct affected fuel probes, which could lead to undetected fuel starvation and consequent dual engine in-flight flame-out.

(f) Compliance

Comply with this AD within the compliance times specified, unless already done.

(g) Part Number and Serial Number Inspection

Within 5,000 flight hours or 24 months, whichever occurs first after the effective date of this AD: Inspect to determine if any fuel probe has any part number and serial number identified in table 1 to paragraph (g) of this AD. A review of airplane maintenance records is acceptable in lieu of this inspection if the part number and serial number of the part can be conclusively determined from that review.

TABLE 1 TO PARAGRAPH (g) OF THIS AD—AFFECTED FUEL PROBES

Airplane model	Part No.	Serial No.
ATR 42	766–046–2	1046 through 1083 inclusive.
ATR 42	766–047–2	1154 through 1214 inclusive.
ATR 42	766–048–2	1150 through 1197 inclusive.
ATR 42	768–055	1156 through 1227 inclusive.
ATR 42	798–038	1150 through 1238 inclusive.
ATR 72	766–793–1	1469 through 1826 inclusive.
ATR 72	766–795–2	1661 through 2093 inclusive.
ATR 72	766–796–2	1722 through 2152 inclusive.
ATR 72	766–797–2	1663 through 2051 inclusive.
ATR 72	766–983–1	2200 through 2652 inclusive.
ATR 72	768–100	1511 through 1876 inclusive.

(h) Replacement

If any fuel probe is found that has any part number and serial number specified in table 1 to paragraph (g) of this AD: Within 5,000 flight hours or 24 months, whichever occurs first after the effective date of this AD, replace the fuel probe with a serviceable fuel probe, using a method approved by the Manager, International Branch, ANM–116, Transport Airplane Directorate, FAA; or the European Aviation Safety Agency (EASA); or ATR–GIE Avions de Transport Régional's EASA Design Organization Approval (DOA). If approved by the DOA, the approval must include the DOA-authorized signature.

Note 1 to paragraph (h) of this AD: Guidance on accomplishing the replacement can be found in Job Instruction Card 28–42–72, RAI 10000–001, ''Removal and Installation of Fuel Quantity or Fuel Temp/Quantity Probe'' of the ATR–42 Aircraft Maintenance Manual; and Job Instruction Card 28–42–72, RAI 10000–002, ''Removal and Installation of Fuel Quantity or Fuel Temp/Quantity Probe'' of the ATR–72 Aircraft Maintenance Manual.

(i) Definition of Serviceable Fuel Probe

For the purposes of this AD, a fuel probe is serviceable if it meets the criterion specified in paragraph (i)(1) or (i)(2) of this AD.

(1) The fuel probe is not listed in table 1 to paragraph (g) of this AD.

(2) The fuel probe is listed in table 1 to paragraph (g) of this AD, but has control tag ''C'' marked on the part identification plate, as specified in Zodiac Aerospace Service Bulletin 766983–28–002, Revision 1, dated March 24, 2014.

(j) Parts Installation Limitations

As of the effective date of this AD, no person may install, on any airplane, a fuel probe having any part number and serial number identified in table 1 to paragraph (g) of this AD, unless control tag ''C'' is marked on the part identification plate, as specified in Zodiac Aerospace Service Bulletin 766983–28–002, Revision 1, dated March 24, 2014.

(k) Credit for Previous Actions

This paragraph provides credit for applying the definitions and limitations specified in paragraphs (i)(2) and (j) of this AD, if those provisions were applied before the effective date of this AD using Zodiac Aerospace Service Bulletin 766983–28–002, dated October 15, 2013, which is not incorporated by reference in this AD.

(l) Other FAA AD Provisions

The following provisions also apply to this AD:

(1) *Alternative Methods of Compliance (AMOCs):* The Manager, International Branch, ANM–116, Transport Airplane Directorate, FAA, has the authority to approve AMOCs for this AD, if requested using the procedures found in 14 CFR 39.19. In accordance with 14 CFR 39.19, send your request to your principal inspector or local Flight Standards District Office, as appropriate. If sending information directly to the International Branch, send it to ATTN: Tom Rodriguez, Aerospace Engineer, International Branch, ANM–116, Transport Airplane Directorate, FAA, 1601 Lind Avenue SW., Renton, WA 98057–3356; telephone 425–227–1137; fax 425–227–1149. Information may be emailed to: *9-ANM-116-AMOC-REQUESTS@faa.gov.* Before using

any approved AMOC, notify your appropriate principal inspector, or lacking a principal inspector, the manager of the local flight standards district office/certificate holding district office. The AMOC approval letter must specifically reference this AD.

(2) *Contacting the Manufacturer:* For any requirement in this AD to obtain corrective actions from a manufacturer, the action must be accomplished using a method approved by the Manager, International Branch, ANM–116, Transport Airplane Directorate, FAA; or EASA; or ATR–GIE Avions de Transport Régional's EASA DOA. If approved by the DOA, the approval must include the DOA-authorized signature.

(m) Related Information

(1) Refer to Mandatory Continuing Airworthiness Information (MCAI) EASA Airworthiness Directive 2014–0075R1, dated April 24, 2014, for related information. This MCAI may be found in the AD docket on the Internet at *http://www.regulations.gov/#!documentDetail;D=FAA-2014-0568-0002.*

(2) Service information identified in this AD that is not incorporated by reference is available at the addresses specified in paragraphs (n)(3) and (n)(4) of this AD.

(n) Material Incorporated by Reference

(1) The Director of the Federal Register approved the incorporation by reference (IBR) of the service information listed in this paragraph under 5 U.S.C. 552(a) and 1 CFR part 51.

(2) You must use this service information as applicable to do the actions required by this AD, unless this AD specifies otherwise.

(i) Zodiac Aerospace Service Bulletin 766983–28–002, Revision 1, dated March 24, 2014.

(ii) Reserved.

(3) For service information identified in this AD, contact Zodiac Aerospace, Technical Publication Department, 61 Rue Pierre Curie—CS20001, 78373 Plaisir Cedex, France; phone: +33 (0)1 61 34 19 24; fax: +33 (0)1 61 34 21 13; email: *yann.laine@zodiacaerospace.com;* Internet: *http://www.zodiacaerospace.com.*

(4) You may view this service information at the FAA, Transport Airplane Directorate, 1601 Lind Avenue SW., Renton, WA. For information on the availability of this material at the FAA, call 425–227–1221.

(5) You may view this service information that is incorporated by reference at the National Archives and Records Administration (NARA). For information on the availability of this material at NARA, call 202–741–6030, or go to: *http://www.archives.gov/federal-register/cfr/ibr-locations.html.*

Issued in Renton, Washington, on May 18, 2015.

John P. Piccola, Jr.,

Acting Manager, Transport Airplane Directorate, Aircraft Certification Service.

[FR Doc. 2015–13319 Filed 6–8–15; 8:45 am]

BILLING CODE 4910–13–P

DEPARTMENT OF TRANSPORTATION

Federal Aviation Administration

14 CFR Part 39

[Docket No. FAA–2014–0646; Directorate Identifier 2013–SW–053–AD; Amendment 39–18174; AD 2015–12–01]

RIN 2120–AA64

Airworthiness Directives; Airbus Helicopters (Previously Eurocopter France) Helicopters

AGENCY: Federal Aviation Administration (FAA), DOT.

ACTION: Final rule.

SUMMARY: We are adopting a new airworthiness directive (AD) for Airbus Helicopters (previously Eurocopter France) Model AS355E, AS355F, AS355F1, and AS355F2 helicopters with a Fueltron flowmeter installed. This AD requires removing each flowmeter, replacing the fuel system hoses, and disabling the electrical connections for the flowmeter installation. This AD was prompted by a report of particle contamination creating an obstruction in a flowmeter which resulted in an uncontrolled flame-out of the engine. The actions of this AD are intended to prevent obstruction of the fuel supply to the flowmeter, which could result in engine flame-out and subsequent loss of control of the helicopter.

DATES: This AD is effective July 14, 2015.

The Director of the Federal Register approved the incorporation by reference of a certain document listed in this AD as of July 14, 2015.

ADDRESSES: For service information identified in this AD, contact Airbus Helicopters, 2701 N. Forum Drive, Grand Prairie, Texas 75052; telephone (972) 641–0000 or (800) 232–0323; fax (972) 641–3775; or at *http://www.airbushelicopters.com/techpub.* You may review the referenced service information at the FAA, Office of the Regional Counsel, Southwest Region, 2601 Meacham Blvd., Room 663, Fort Worth, Texas 76137. It is also available on the Internet at *http://www.regulations.gov* in Docket No. FAA–2014–0646.

Examining the AD Docket

You may examine the AD docket on the Internet at *http://www.regulations.gov* or in person at the Docket Operations Office between 9 a.m. and 5 p.m., Monday through Friday, except Federal holidays. The AD docket contains this AD, the European Aviation Safety Agency (EASA) AD, any incorporated-by-reference service information, the economic evaluation, any comments received, and other information. The street address for the Docket Operations Office (phone: 800–647–5527) is U.S. Department of Transportation, Docket Operations Office, M–30, West Building Ground Floor, Room W12–140, 1200 New Jersey Avenue SE., Washington, DC 20590.

FOR FURTHER INFORMATION CONTACT: James Blyn, Aviation Safety Engineer, Regulations and Policy Group, Rotorcraft Directorate, FAA, 2601 Meacham Blvd., Fort Worth, Texas 76137; telephone (817) 222–5110; email *james.blyn@faa.gov.*

SUPPLEMENTARY INFORMATION:

Discussion

On September 15, 2014, at 79 FR 54925, the **Federal Register** published our notice of proposed rulemaking (NPRM), which proposed to amend 14 CFR part 39 by adding an AD that would apply to Airbus Helicopters Model AS355E, AS355F, AS355F1, and AS355F2 helicopters with a certain flowmeter installed. The NPRM proposed to require, within 750 hours time-in-service, removing the flowmeter from each engine, replacing the fuel hose with part number (P/N) 704A34–416–029 for the left-hand (LH) engine and P/N 704A34–416–030 for the right-hand (RH) engine, removing the flowmeter indicator, and disabling the flowmeter electrical connections. The proposed requirements were intended to prevent obstruction of the fuel supply to the flowmeter, which could result in engine flame-out and subsequent loss of control of the helicopter.

The NPRM was prompted by AD No. 2013–0205, dated September 9, 2013, issued by EASA, which is the Technical Agent for the Member States of the European Union, to correct an unsafe condition for Eurocopter (now Airbus Helicopters) Model AS355 E, AS355 F, AS355 F1, and AS355 F2 helicopters with modification 350A070791 (installation of the Fueltron flowmeter), except helicopters with modification 355A085801 (removal of the Fueltron flowmeter). EASA advises, after landing, an AS355 helicopter experienced an uncontrolled flame-out of the No. 1 engine caused by particle contamination in the fuel that obstructed the Fueltron flowmeter. EASA further states that because the flowmeter installation is identical on both engines, this condition could lead to flame-out of both engines in flight, possibly resulting in reduced control of the helicopter. EASA AD No. 2013–0205 requires removing the

flowmeter from each engine, modifying the fuel line system with new fuel lines, removing the flowmeter indicator, and disabling the flowmeter electrical connections. Since we issued the NPRM (79 FR 54925, September 15, 2014), the title of the approving official for Alternative Methods of Compliance (AMOCs) has changed. Thus, we have revised the title of the approving official from the Manager of the Regulations and Policy Group to the Manager of the Safety Management Group.

Comments

We gave the public the opportunity to participate in developing this AD, but we did not receive any comments on the NPRM (79 FR 54925, September 15, 2014).

FAA's Determination

These helicopters have been approved by the aviation authority of France and are approved for operation in the United States. Pursuant to our bilateral agreement with France, EASA, its technical representative, has notified us of the unsafe condition described in the EASA AD. We are issuing this AD because we evaluated all information provided by EASA and determined the unsafe condition exists and is likely to exist or develop on other helicopters of these same type designs and that air safety and the public interest require adopting the AD requirements as proposed.

Interim Action

We consider this AD to be an interim action. The design approval holder is currently developing a modification that will address the unsafe condition identified in this AD. Once this modification is developed, approved, and available, we might consider additional rulemaking.

Related Service Information Under 1 CFR Part 51

Eurocopter issued Alert Service Bulletin (ASB) No. AS355–28.00.20, Revision 0, dated June 6, 2013, for Model AS355 E, AS355 F, AS355 F1, and AS355 F2 helicopters, which describes procedures for removing and disabling the Fueltron flowmeter installation. The ASB corresponds to Eurocopter modification 355A085801. This information is reasonably available because the interested parties have access to it through their normal course of business or by the means identified in the **ADDRESSES** section of this AD.

Costs of Compliance

We estimate that this AD will affect 47 helicopters of U.S. Registry. We estimate that operators may incur the following costs in order to comply with this AD. At an average labor rate of $85 per work-hour, removing the flowmeter installation requires about 4 work-hours, and required parts cost about $1,600, for a cost per helicopter of $1,940 and a total cost of $91,180 for the fleet.

Authority for This Rulemaking

Title 49 of the United States Code specifies the FAA's authority to issue rules on aviation safety. Subtitle I, section 106, describes the authority of the FAA Administrator. Subtitle VII: Aviation Programs, describes in more detail the scope of the Agency's authority.

We are issuing this rulemaking under the authority described in Subtitle VII, Part A, Subpart III, Section 44701: ''General requirements.'' Under that section, Congress charges the FAA with promoting safe flight of civil aircraft in air commerce by prescribing regulations for practices, methods, and procedures the Administrator finds necessary for safety in air commerce. This regulation is within the scope of that authority because it addresses an unsafe condition that is likely to exist or develop on helicopters identified in this rulemaking action.

Regulatory Findings

This AD will not have federalism implications under Executive Order 13132. This AD will not have a substantial direct effect on the States, on the relationship between the national government and the States, or on the distribution of power and responsibilities among the various levels of government.

For the reasons discussed above, I certify that this AD:

(1) Is not a ''significant regulatory action'' under Executive Order 12866;

(2) Is not a ''significant rule'' under DOT Regulatory Policies and Procedures (44 FR 11034, February 26, 1979);

(3) Will not affect intrastate aviation in Alaska to the extent that it justifies making a regulatory distinction; and

(4) Will not have a significant economic impact, positive or negative, on a substantial number of small entities under the criteria of the Regulatory Flexibility Act.

We prepared an economic evaluation of the estimated costs to comply with this AD and placed it in the AD docket.

List of Subjects in 14 CFR Part 39

Air transportation, Aircraft, Aviation safety, Incorporation by reference, Safety.

Adoption of the Amendment

Accordingly, under the authority delegated to me by the Administrator, the FAA amends 14 CFR part 39 as follows:

PART 39—AIRWORTHINESS DIRECTIVES

■ 1. The authority citation for part 39 continues to read as follows:

Authority: 49 U.S.C. 106(g), 40113, 44701.

§ 39.13 [Amended]

■ 2. The FAA amends § 39.13 by adding the following new airworthiness directive (AD):

2015–12–01 Airbus Helicopters (Previously Eurocopter France): Amendment 39–18174; Docket No. FAA–2014–0646; Directorate Identifier 2013–SW–053–AD.

(a) Applicability

This AD applies to Airbus Helicopters Model AS355E, AS355F, AS355F1, and AS355F2 helicopters, certificated in any category, with a Fueltron flowmeter part number (P/N) 704A37–670–001 installed.

(b) Unsafe Condition

This AD defines the unsafe condition as obstruction of the fuel supply to the flowmeter, which could result in engine shutdown and subsequent loss of control of the helicopter.

(c) Effective Date

This AD becomes effective July 14, 2015.

(d) Compliance

You are responsible for performing each action required by this AD within the specified compliance time unless it has already been accomplished prior to that time.

(e) Required Actions

(1) Within 750 hours time-in-service:

(i) Remove each flowmeter.

(ii) Remove each left-hand hose, P/N 704A34.4160.31, and install hose, P/N 704A34–416–029, as depicted in Figures 1 and 2 of Eurocopter Alert Service Bulletin No. AS355–28.00.20, Revision 0, dated June 6, 2013 (ASB AS355–28.00.20).

(iii) Remove each right-hand hose, P/N 704A34.4160.32, and install hose, P/N 704A34–416–030, as depicted in Figures 1 and 2 of ASB AS355–28.00.20.

(iv) Remove each flowmeter indicator and disable the flowmeter wiring as described in the Accomplishment Instructions, paragraph 3.B.2.b., of ASB AS355–28.00.20.

(2) After the effective date of this AD, do not install a flowmeter, P/N 704A37–670–001, on any helicopter.

(f) Special Flight Permits

Special flight permits are prohibited.

(g) Alternative Methods of Compliance (AMOCs)

(1) The Manager, Safety Management Group, FAA, may approve AMOCs for this AD. Send your proposal to: James Blyn, Aviation Safety Engineer, Regulations and

Policy Group, Rotorcraft Directorate, FAA, 2601 Meacham Blvd., Fort Worth, Texas 76137; telephone (817) 222–5110; email *james.blyn@faa.gov.*

(2) For operations conducted under a 14 CFR part 119 operating certificate or under 14 CFR part 91, subpart K, we suggest that you notify your principal inspector, or lacking a principal inspector, the manager of the local flight standards district office or certificate holding district office, before operating any aircraft complying with this AD through an AMOC.

(h) Additional Information

The subject of this AD is addressed in European Aviation Safety Agency (EASA) AD 2013–0205, dated September 9, 2013. You may view the EASA AD on the Internet at *http://www.regulations.gov* in Docket No. FAA–2014–0646.

(i) Subject

Joint Aircraft Service Component (JASC) Code: 7333, Fuel Flow Sensor.

(j) Material Incorporated by Reference

(1) The Director of the Federal Register approved the incorporation by reference of the service information listed in this paragraph under 5 U.S.C. 552(a) and 1 CFR part 51.

(2) You must use this service information as applicable to do the actions required by this AD, unless the AD specifies otherwise.

(i) Eurocopter Alert Service Bulletin No. AS355–28.00.20, Revision 0, dated June 6, 2013.

(ii) Reserved.

(3) For Eurocopter service information identified in this AD, contact Airbus Helicopters, 2701 N. Forum Drive, Grand Prairie, Texas 75052; telephone (972) 641–0000 or (800) 232–0323; fax (972) 641–3775; or at *http://www.airbushelicopters.com/techpub.*

(4) You may view this service information at FAA, Office of the Regional Counsel, Southwest Region, 2601 Meacham Blvd., Room 663, Fort Worth, Texas 76137. For information on the availability of this material at the FAA, call (817) 222–5110.

(5) You may view this service information that is incorporated by reference at the National Archives and Records Administration (NARA). For information on the availability of this material at NARA, call (202) 741–6030, or go to: *http://www.archives.gov/federal-register/cfr/ibr-locations.html.*

Issued in Fort Worth, Texas, on May 29, 2015.

Lance T. Gant,

Acting Directorate Manager, Rotorcraft Directorate, Aircraft Certification Service.

[FR Doc. 2015–13851 Filed 6–8–15; 8:45 am]

BILLING CODE 4910–13–P

DEPARTMENT OF TRANSPORTATION

Federal Aviation Administration

14 CFR Part 39

[Docket No. FAA–2013–0489; Directorate Identifier 2008–SW–003–AD; Amendment 39–18175; AD 2015–12–02]

RIN 2120–AA64

Airworthiness Directives; Bell Helicopter Textron Canada Limited

AGENCY: Federal Aviation Administration (FAA), DOT.

ACTION: Final rule.

SUMMARY: We are adopting a new airworthiness directive (AD) for certain Bell Helicopter Textron Canada Limited (Bell) Model 206L–1, 206L–3, and 206L–4 helicopters. This AD requires installing a placard and revising the limitations section of the rotorcraft flight manual (RFM). This AD was prompted by several incidents of third stage engine turbine wheel failures caused by excessive vibrations at certain engine speeds during steady-state operations. The actions of this AD are intended to prevent turbine failure, engine power loss, and subsequent loss of control of the helicopter.

DATES: This AD is effective July 14, 2015.

ADDRESSES: For service information identified in this AD, contact Bell Helicopter Textron Canada Limited, 12,800 Rue de l'Avenir, Mirabel, Quebec J7J1R4; telephone (450) 437–2862 or (800) 363–8023; fax (450) 433–0272; or at *http://www.bellcustomer.com/files/.* You may review the referenced service information at the FAA, Office of the Regional Counsel, Southwest Region, 2601 Meacham Blvd., Room 663, Fort Worth, Texas 76137.

Examining the AD Docket

You may examine the AD docket on the Internet at *http://www.regulations.gov* or in person at the Docket Operations Office between 9 a.m. and 5 p.m., Monday through Friday, except Federal holidays. The AD docket contains this AD, the supplemental type certificate (STC), the Transport Canada Civil Aviation (TCCA) AD, the economic evaluation, any comments received, and other information. The street address for the Docket Operations Office (phone: 800–647–5527) is U.S. Department of Transportation, Docket Operations Office, M–30, West Building Ground Floor, Room W12–140, 1200 New Jersey Avenue SE., Washington, DC 20590.

FOR FURTHER INFORMATION CONTACT: James Blyn, Aviation Safety Engineer, Regulations and Policy Group, Rotorcraft Directorate, FAA, 2601 Meacham Blvd., Fort Worth, Texas 76137; telephone (817) 222–5110; email *james.blyn@faa.gov.*

SUPPLEMENTARY INFORMATION:

Discussion

On June 7, 2013, at 78 FR 34282, the **Federal Register** published our notice of proposed rulemaking (NPRM), which proposed to amend 14 CFR part 39 by adding an AD that would apply to certain Bell Model 206L–3 and 206L–4 helicopters. The NPRM proposed to require installing a placard on the instrument panel below the dual tachometer and revising the Operating Limitations section of the Model 206L–3 and 206L–4 RFMs by inserting pages that limit steady-state operations between speeds of 71.8% and 91.5%. The proposed requirements were intended to prevent turbine failure, engine power loss, and subsequent loss of control of the helicopter.

The NPRM was prompted by TCCA AD No. CF–2005–28R1, dated June 14, 2007, to correct an unsafe condition for certain Model 206L–3 and 206L–4 helicopters. TCCA, which is the aviation authority for Canada, advises of several failures of third stage turbine wheels used in Rolls-Royce 250–C30S and 250–C47B engines. According to TCCA, Rolls-Royce determined that detrimental vibrations can occur within a particular range of turbine speeds, and may be a contributing factor to these failures. Bell has revised the RFM and provided a corresponding decal to inform pilots to avoid steady-state operations between 71.8% and 91.5% turbine speeds. The TCCA AD requires amending the RFMs, advising pilots of the change, and installing a decal as described in Bell Alert Service Bulletin (ASB) No. 206L–05–134, dated June 8, 2005, or later revisions.

On October 3, 2014, at 79 FR 59695, the **Federal Register** published our supplemental notice of proposed rulemaking (SNPRM), which proposed to revise the applicability and change the procedures for updating the RFM. The SNPRM proposed adding Bell Model 206L–1 helicopters with Engine Upgrade Kit part number (P/N) 206–706–520 installed, to the applicability. Engine Upgrade Kit P/N 206–706–520 replaces the Rolls-Royce 250–C28B engine with a Rolls-Royce 250–C30P engine. The condition causing the failures of third stage turbine wheels used in Rolls-Royce 250–C30S and 250–C–47B engines could also exist in Rolls-Royce 250–C30P engines. The SNPRM

also proposed removing Bell Model 206L–3 and 206L–4 helicopters having Rolls-Royce 250–C20R engines installed under STC No. SR00036SE from the applicability because that engine is not affected by the unsafe condition. The SNPRM also proposed changing the procedures for modifying the RFM Limitations Section from inserting revised RFM pages to inserting a copy of this AD into the RFM or by making pen and ink changes.

Comments

We gave the public the opportunity to comment on the SNPRM (79 FR 59695, October 3, 2014) but we received no comments.

FAA's Determination

These helicopters have been approved by the aviation authority of Canada and are approved for operation in the United States. Pursuant to our bilateral agreement with Canada, TCCA, its technical representative, has notified us of the unsafe condition described in the TCCA AD. We are issuing this AD because we evaluated all information provided by TCCA, reviewed the relevant information, considered the comment received, and determined the unsafe condition exists and is likely to exist or develop on other helicopters of these same type designs and that air safety and the public interest require adopting the AD requirements as proposed.

Differences Between This AD and the TCCA AD

The TCCA AD requires compliance within 10 calendar days; this AD requires compliance within 30 days. This AD is applicable to Model 206L–1 helicopters with Engine Upgrade Kit P/N 206–706–520 installed because the same unsafe condition exits on this model, and the TCCA AD is not.

Related Service Information

Bell issued ASB No. 206L–05–134, Revision A, dated April 9, 2007, which describes procedures for installing a placard on the instrument panel below the main rotor RPM (Nr)/power turbine RPM (N2) dual tachometer and for inserting the RFM changes into the flight manual. Revision A of the ASB was issued to exclude Bell Model 206L–3 and 206L–4 helicopters with 250–C20R engines installed under STC No. SR00036SE from the requirements of the ASB.

Costs of Compliance

We estimate that this AD will affect 616 helicopters of U.S. Registry. We estimate that operators may incur the following costs in order to comply with this AD. Based on an average labor rate of $85 per work-hour, amending the RFM requires about 0.5 work-hour, for a cost per helicopter of about $43 and a cost to U.S. operators of $26,488. Installing the decal requires about 0.2 work-hour, and required parts cost $20, for a cost per helicopter of $37 and a cost to U.S. operators of $22,792. Based on these estimates, the total cost of this AD is $80 per helicopter and $49,280 for the fleet.

Authority for This Rulemaking

Title 49 of the United States Code specifies the FAA's authority to issue rules on aviation safety. Subtitle I, section 106, describes the authority of the FAA Administrator. Subtitle VII: Aviation Programs, describes in more detail the scope of the Agency's authority.

We are issuing this rulemaking under the authority described in Subtitle VII, Part A, Subpart III, Section 44701: ''General requirements.'' Under that section, Congress charges the FAA with promoting safe flight of civil aircraft in air commerce by prescribing regulations for practices, methods, and procedures the Administrator finds necessary for safety in air commerce. This regulation is within the scope of that authority because it addresses an unsafe condition that is likely to exist or develop on helicopters identified in this rulemaking action.

Regulatory Findings

This AD will not have federalism implications under Executive Order 13132. This AD will not have a substantial direct effect on the States, on the relationship between the national government and the States, or on the distribution of power and responsibilities among the various levels of government.

For the reasons discussed above, I certify that this AD:

(1) Is not a ''significant regulatory action'' under Executive Order 12866;

(2) Is not a ''significant rule'' under DOT Regulatory Policies and Procedures (44 FR 11034, February 26, 1979);

(3) Will not affect intrastate aviation in Alaska to the extent that it justifies making a regulatory distinction; and

(4) Will not have a significant economic impact, positive or negative, on a substantial number of small entities under the criteria of the Regulatory Flexibility Act.

We prepared an economic evaluation of the estimated costs to comply with this AD and placed it in the AD docket.

List of Subjects in 14 CFR Part 39

Air transportation, Aircraft, Aviation safety, Incorporation by reference, Safety.

Adoption of the Amendment

Accordingly, under the authority delegated to me by the Administrator, the FAA amends 14 CFR part 39 as follows:

PART 39—AIRWORTHINESS DIRECTIVES

■ 1. The authority citation for part 39 continues to read as follows:

Authority: 49 U.S.C. 106(g), 40113, 44701.

§ 39.13 [Amended]

■ 2. The FAA amends § 39.13 by adding the following new airworthiness directive (AD):

2015–12–02 Bell Helicopter Textron Canada Limited (Bell): Amendment 39–18175; Docket No. FAA–2013–0489; Directorate Identifier 2008–SW–003–AD.

(a) Applicability

This AD applies to the following helicopters, certificated in any category:

(1) Bell Model 206L–1 with an Engine Upgrade Kit part number (P/N) 206–706–520–101 installed;

(2) Bell Model 206L–3, serial number (S/N) 51001 through 51612, except those with a Rolls-Royce 250–C20R engine installed under Supplemental Type Certificate (STC) No. SR00036SE; and

(3) Bell Model 206L–4, S/N 52001 through 52313, except those with a Rolls-Royce 250–C20R engine installed under STC No. SR00036SE.

(b) Unsafe Condition

This AD defines the unsafe condition as a third stage turbine vibration, which could result in turbine failure, engine power loss, and subsequent loss of control of the helicopter.

(c) Effective Date

This AD becomes effective July 14, 2015.

(d) Compliance

You are responsible for performing each action required by this AD within the specified compliance time unless it has already been accomplished prior to that time.

(e) Required Actions

Within 30 days:

(1) Install placard P/N 230–075–213–117, or equivalent, on the instrument panel directly below the dual tachometer.

(2) Revise the Operating Limitations section of the Rotorcraft Flight Manual (RFM) by inserting a copy of this AD into the RFM or by making pen and ink changes as follows:

(i) In the Power Plant section, beneath the Power Turbine RPM header, add: Avoid continuous operations 71.8% to 91.5%.

(ii) In the Placards and Decals section, add: ''AVOID CONT OPS 71.8% TO 91.5% N2'' with the location identification ''Location: Instrument Panel.''

(f) Alternative Methods of Compliance (AMOCs)

(1) The Manager, Safety Management Group, FAA, may approve AMOCs for this AD. Send your proposal to: James Blyn, Aviation Safety Engineer, Regulations and Policy Group, Rotorcraft Directorate, FAA, 2601 Meacham Blvd., Fort Worth, Texas 76137; telephone (817) 222–5110; email *james.blyn@faa.gov.*

(2) For operations conducted under a 14 CFR part 119 operating certificate or under 14 CFR part 91, subpart K, we suggest that you notify your principal inspector, or lacking a principal inspector, the manager of the local flight standards district office or certificate holding district office, before operating any aircraft complying with this AD through an AMOC.

(g) Additional Information

(1) Bell Alert Service Bulletin No. 206L–05–134, Revision A, dated April 9, 2007, which is not incorporated by reference, contains additional information about the subject of this AD. For service information identified in this AD, contact Bell Helicopter Textron Canada Limited, 12,800 Rue de l'Avenir, Mirabel, Quebec J7J1R4; telephone (450) 437–2862 or (800) 363–8023; fax (450) 433–0272; or at *http://www.bellcustomer.com/files/.* You may review a copy of the service information at the FAA, Office of the Regional Counsel, Southwest Region, 2601 Meacham Blvd., Room 663, Fort Worth, Texas 76137.

(2) STC No. SR00036SE, amended October 20, 1995; and reissued January 23, 2014, may be found on the Internet at *http://www.regulations.gov* in Docket No. FAA–2013–0489.

(3) The subject of this AD is addressed in Transport Canada Civil Aviation (TCCA) AD No. CF–2005–28R1, dated June 14, 2007. You may view the TCCA AD on the Internet at *http://www.regulations.gov* in Docket No. FAA–2013–0489.

(h) Subject

Joint Aircraft Service Component (JASC) Code: 7250, Turbine Section.

Issued in Fort Worth, Texas, on May 29, 2015.

Lance T. Gant,

Acting Directorate Manager, Rotorcraft Directorate, Aircraft Certification Service.

[FR Doc. 2015–13852 Filed 6–8–15; 8:45 am]

BILLING CODE 4910–13–P

DEPARTMENT OF TRANSPORTATION

Federal Aviation Administration

14 CFR Part 39

[Docket No. FAA–2014–1020; Directorate Identifier 2013–SW–078–AD; Amendment 39–18172; AD 2015–11–09]

RIN 2120–AA64

Airworthiness Directives; Sikorsky Aircraft Corporation (Type Certificate Previously Held by Schweizer Aircraft Corporation) Helicopters

AGENCY: Federal Aviation Administration (FAA), DOT.

ACTION: Final rule.

SUMMARY: We are adopting a new airworthiness directive (AD) for Sikorsky Aircraft Corporation (type certificate previously held by Schweizer Aircraft Corporation) (Sikorsky) Model 269D and Model 269D Configuration A helicopters. This AD requires reducing the life limit of the ring gear carrier assembly. This AD was prompted by cracks in the ring gear carrier assembly. The actions are intended to reduce the life of the ring gear carrier assembly to prevent failure of the main rotor transmission, loss of engine power to the main rotor, and subsequent loss of control of the helicopter.

DATES: This AD is effective July 14, 2015.

ADDRESSES: For service information identified in this AD, contact Sikorsky Aircraft Corporation, Customer Service Engineering, 124 Quarry Road, Trumbull, CT 06611; telephone 1–800–Winged-S or 203–416–4299; email *sikorskywcs@sikorsky.com.* You may review a copy of the referenced service information at the FAA, Office of the Regional Counsel, Southwest Region, 2601 Meacham Blvd., Room 663, Fort Worth, Texas 76137.

Examining the AD Docket

You may examine the AD docket on the Internet at *http://www.regulations.gov* or in person at the Docket Operations Office between 9 a.m. and 5 p.m., Monday through Friday, except Federal holidays. The AD docket contains this AD, the economic evaluation, any comments received, and other information. The street address for the Docket Operations Office (phone: 800–647–5527) is U.S. Department of Transportation, Docket Operations Office, M–30, West Building Ground Floor, Room W12–140, 1200 New Jersey Avenue SE., Washington, DC 20590.

FOR FURTHER INFORMATION CONTACT: Norman Perenson, Aviation Safety Engineer, New York Aircraft Certification Office, Propulsion & Services Branch, FAA, 1600 Stewart Ave., Westbury, New York; telephone (516) 228–7337; email *Norman.Perenson@faa.gov.*

SUPPLEMENTARY INFORMATION:

Discussion

On December 15, 2014, at 79 FR 74037, the **Federal Register** published our notice of proposed rulemaking (NPRM), which proposed to amend 14 CFR part 39 by adding an AD that would apply to Sikorsky Model 269D and Model 269D Configuration A helicopters with a certain part-numbered ring carrier assembly installed. The NPRM proposed to require reducing the life limit of the ring carrier assembly from 6,000 hours time-in-service (TIS) to 5,000 hours TIS by revising the Airworthiness Limitations Section of the applicable maintenance manual and by removing from service any ring carrier assembly that exceeded the new life limit. The NPRM was prompted by the discovery of a crack in the ring gear carrier assembly, which extended around the entire circumference of the flange and intersected some of the bolt holes but did not propagate ''bolt hole to bolt hole.'' A metallurgical evaluation determined that fretting caused multiple origin fatigue cracking on the ring gear carrier assembly. The proposed requirements were intended to reduce the life of the ring gear carrier assembly to prevent failure of the main rotor transmission, loss of engine power to the main rotor, and subsequent loss of control of the helicopter.

Comments

We gave the public the opportunity to participate in developing this AD, but we did not receive any comments on the NPRM (79 FR 74037, December 15, 2014).

FAA's Determination

We have reviewed the relevant information and determined that an unsafe condition exists and is likely to exist or develop on other products of these same type designs and that air safety and the public interest require adopting the AD requirements as proposed.

Related Service Information

Sikorsky issued 269D Helicopter Alert Service Bulletin No. ASB DB–040A, Revision A, dated December 4, 2012, to implement a reduction in service life of the ring gear carrier assembly, part number 269A5194, from 6,000 flight hours to 5,000 flight hours.

Costs of Compliance

We estimate that this AD will affect 16 helicopters of U.S. Registry.

We estimate that operators may incur the following costs in order to comply with this AD. We estimate a minimal cost to change the life limit of the ring gear. If required, we estimate it would take 27.5 hours to replace a ring gear carrier assembly at $85 per work hour. Required parts would cost $7,591 for a total of $9,929 per helicopter.

Authority for This Rulemaking

Title 49 of the United States Code specifies the FAA's authority to issue rules on aviation safety. Subtitle I, section 106, describes the authority of the FAA Administrator. Subtitle VII: Aviation Programs, describes in more detail the scope of the Agency's authority.

We are issuing this rulemaking under the authority described in Subtitle VII, Part A, Subpart III, Section 44701: ''General requirements.'' Under that section, Congress charges the FAA with promoting safe flight of civil aircraft in air commerce by prescribing regulations for practices, methods, and procedures the Administrator finds necessary for safety in air commerce. This regulation is within the scope of that authority because it addresses an unsafe condition that is likely to exist or develop on products identified in this rulemaking action.

Regulatory Findings

This AD will not have federalism implications under Executive Order 13132. This AD will not have a substantial direct effect on the States, on the relationship between the national government and the States, or on the distribution of power and responsibilities among the various levels of government.

For the reasons discussed above, I certify that this AD:

1. Is not a ''significant regulatory action'' under Executive Order 12866;

2. Is not a ''significant rule'' under DOT Regulatory Policies and Procedures (44 FR 11034, February 26, 1979);

3. Will not affect intrastate aviation in Alaska to the extent that it justifies making a regulatory distinction; and

4. Will not have a significant economic impact, positive or negative, on a substantial number of small entities under the criteria of the Regulatory Flexibility Act.

We prepared an economic evaluation of the estimated costs to comply with this AD and placed it in the AD docket.

List of Subjects in 14 CFR Part 39

Air transportation, Aircraft, Aviation safety, Incorporation by reference, Safety.

Adoption of the Amendment

Accordingly, under the authority delegated to me by the Administrator, the FAA amends 14 CFR part 39 as follows:

PART 39—AIRWORTHINESS DIRECTIVES

■ 1. The authority citation for part 39 continues to read as follows:

Authority: 49 U.S.C. 106(g), 40113, 44701.

§ 39.13 [Amended]

■ 2. The FAA amends § 39.13 by adding the following new airworthiness directive (AD):

2015–11–09 Sikorsky Aircraft Corporation (Type Certificate Previously Held By Schweizer Aircraft Corporation): Amendment 39–18172; Docket No. FAA–2014–1020; Directorate Identifier 2013–SW–078–AD.

(a) Applicability

This AD applies to Sikorsky Aircraft Corporation Model 269D and Model 269D Configuration A helicopters with ring gear carrier assembly, part number (P/N) 269A5194, installed, certificated in any category.

(b) Unsafe Condition

This AD defines the unsafe condition as a fatigue crack in a ring gear carrier assembly. This condition could result in failure of the main rotor transmission, loss of engine power to the main rotor, and subsequent loss of control of the helicopter.

(c) Effective Date

This AD becomes effective July 14, 2015.

(d) Compliance

You are responsible for performing each action required by this AD within the specified compliance time unless it has already been accomplished prior to that time.

(e) Required Actions

Before further flight:

(1) Revise the Airworthiness Limitations Section of the applicable maintenance manual by reducing the life limit of the ring gear carrier assembly, P/N 269A5194, from 6,000 hours time-in-service (TIS) to 5,000 hours TIS.

(2) Remove from service any ring gear carrier assembly, P/N 269A5194, with 5,000 or more hours TIS.

(f) Alternative Methods of Compliance (AMOCs)

(1) The Manager, New York Aircraft Certification Office, FAA, may approve AMOCs for this AD. Send your proposal to: Norman Perenson, Aviation Safety Engineer, New York Aircraft Certification Office, Propulsion & Services Branch, FAA, 1600 Stewart Ave., Westbury, New York; telephone (516) 228–7337; email *Norman.Perenson@faa.gov.*

(2) For operations conducted under a 14 CFR part 119 operating certificate or under 14 CFR part 91, subpart K, we suggest that you notify your principal inspector, or lacking a principal inspector, the manager of the local flight standards district office or certificate holding district office before operating any aircraft complying with this AD through an AMOC.

(g) Additional Information

Sikorsky 269D Helicopter Alert Service Bulletin No. ASB DB–040A, Revision A, dated December 4, 2012, which is not incorporated by reference, contains additional information about the subject of this AD. For service information identified in this AD, contact Sikorsky Aircraft Corporation, Customer Service Engineering, 124 Quarry Road, Trumbull, CT 06611; telephone 1–800–Winged-S or 203–416–4299; email *sikorskywcs@sikorsky.com.* You may review a copy of information at the FAA, Office of the Regional Counsel, Southwest Region, 2601 Meacham Blvd., Room 663, Fort Worth, Texas 76137.

(h) Subject

Joint Aircraft Service Component (JASC) Code: 6300 Main Rotor Drive System.

Issued in Fort Worth, Texas, on May 29, 2015.

Lance T. Gant,

Acting Directorate Manager, Rotorcraft Directorate, Aircraft Certification Service.

[FR Doc. 2015–13846 Filed 6–8–15; 8:45 am]

BILLING CODE 4910–13–P

DEPARTMENT OF TRANSPORTATION

Federal Aviation Administration

14 CFR Part 39

[Docket No. FAA–2014–0493; Directorate Identifier 2013–SW–019–AD; Amendment 39–18173; AD 2015–11–10]

RIN 2120–AA64

Airworthiness Directives; Sikorsky Aircraft Corporation (Sikorsky) Model Helicopters

AGENCY: Federal Aviation Administration (FAA), DOT.

ACTION: Final rule.

SUMMARY: We are adopting a new airworthiness directive (AD) for Sikorsky Model S–92A helicopters. This AD requires installing a main gearbox (MGB) failed pump sensor and vacuum switch wiring, installing an MGB oil auto bypass system, activating Aircraft Management System (AMS) 7.1 software to show a new visual warning, and installing updated enhanced ground proximity warning system (EGPWS) software that includes an aural

annunciation of a complete oil pressure loss condition. This AD also requires inserting a Rotorcraft Flight Manual (RFM) Supplement into the applicable RFM. This AD was prompted by investigation results of in-service oil leakage incidents. The actions are intended to alert and prevent MGB oil loss, which could lead to failure of the MGB and subsequent loss of control of the helicopter.

DATES: This AD is effective July 14, 2015.

The Director of the Federal Register approved the incorporation by reference of a certain document listed in this AD as of July 14, 2015.

ADDRESSES: For service information identified in this AD, contact Sikorsky Aircraft Corporation, Customer Service Engineering, 124 Quarry Road, Trumbull, CT 06611; telephone 1–800–Winged-S or 203–416–4299; email *sikorskywcs@sikorsky.com*; or at *http://www.sikorsky.com.* For the Honeywell service information identified in this proposed AD, contact Honeywell International, Inc., at 15001 NE. 36 Street, Redmond, WA 98052–5316, telephone (800) 601–3099; email *www.myaerospace.com.* You may review a copy of the referenced service information at the FAA, Office of the Regional Counsel, Southwest Region, 2601 Meacham Blvd., Room 663, Fort Worth, Texas 76137.

Examining the AD Docket

You may examine the AD docket on the Internet at *http://www.regulations.gov* or in person at the Docket Operations Office between 9 a.m. and 5 p.m., Monday through Friday, except Federal holidays. The AD docket contains this AD, any incorporated-by-reference service information, the economic evaluation, any comments received, and other information. The street address for the Docket Operations Office (phone: 800–647–5527) is U.S. Department of Transportation, Docket Operations Office, M–30, West Building Ground Floor, Room W12–140, 1200 New Jersey Avenue SE., Washington, DC 20590.

FOR FURTHER INFORMATION CONTACT: Michael Schwetz, Aviation Safety Engineer, Boston Aircraft Certification Office, Engine & Propeller Directorate, FAA, 12 New England Executive Park, Burlington, Massachusetts 01803; telephone (781) 238–7761; email *michael.schwetz@faa.gov.*

SUPPLEMENTARY INFORMATION:

Discussion

On July 23, 2014, at 79 FR 42719, the **Federal Register** published our notice of proposed rulemaking (NPRM), which proposed to amend 14 CFR part 39 by adding an AD that would apply to certain serial-numbered Sikorsky Model S–92A helicopters. The NPRM proposed to require inserting an RFM Supplement into the applicable RFM, and depending on the helicopter's serial number, installing an MGB failed pump sensor and vacuum switch wiring, installing an MGB oil auto bypass system, activating AMS 7.1 software to show a new MGB ''OIL OUT'' visual warning, and updating the EGPWS software to include an aural annunciation of a complete oil pressure loss condition.

The proposed AD was prompted by one accident and one in-service oil leakage incident where it was discovered during subsequent investigations that the pilot failed to activate the bypass valve within 5 seconds of the oil pressure dropping below 35 psi, as required by the RFM. Both accident and incident investigations found that the pilot activated the bypass valve well beyond the 5 seconds. The manual operation of the bypass valve within 5 seconds of the oil pressure dropping below 35 psi has proven not to be a realistic expectation. The proposed requirements were intended to alert and prevent MGB oil loss, which could lead to failure of the MGB and subsequent loss of control of the helicopter.

Comments

Sikorsky commented that it supported issuing the AD but felt portions of the ''Discussion'' section in the preamble of the NPRM (79 FR 42719, July 23, 2014) needed clarification.

We agree with some of the commenter's language regarding the function of the MGB oil auto bypass system. However, the commenter has not requested that we change the proposed rule.

FAA's Determination

We have reviewed the relevant information and determined that an unsafe condition exists and is likely to exist or develop on other products of the same type design and that air safety and the public interest require adopting the AD requirements as proposed.

Related Service Information Under 1 CFR Part 51

We reviewed Sikorsky S–92A Rotorcraft Flight Manual (RFM) Supplement No. 45, Part I, dated July 30, 2012. The RFM supplement provides preflight checks and emergency procedures for the oil pump failure indicating system and the MGB auto bypass. This information is reasonably available because the interested parties have access to it through their normal course of business or by the means identified in the **ADDRESSES** section of this AD.

Other Related Service Information

Sikorsky has issued the following service information:

- Alert Service Bulletin (ASB) No. 92–63–024C, Revision C, dated October 7, 2011, for certain serial-numbered helicopters specifies installing a main module input gear box switch assembly and modifying the MGB vacuum switch wiring. Before making the modification, the ASB states an AMS 4.1 or greater version must first be installed and the following Customer Service Notices (CSN) completed: CSN 92–068C, Revision C, dated March 27, 2012, and CSN 92–069A, Revision A, dated November 10, 2011.
- ASB 92–63–027, Basic Issue, dated January 21, 2013, for certain serial-numbered helicopters specifies installing an MGB oil pressure automatic bypass system, activating an MGB ''OIL OUT'' visual warning in the AMS 7.1 software, and performing systems operational checkout procedures. Before or when installing the MGB oil pressure auto bypass system, the ASB states the following must be complied with: CSN 92–089, Basic Issue, dated January 10, 2013; ASB 92–34–002, Basic Issue, dated January 21, 2013; and ASB 92–63–024C, Revision C, dated October 7, 2011.
- ASB 92–34–002, Basic Issue, dated January 21, 2013, for certain serial-numbered helicopters with certain part-numbered EGPWS installed, specifies installing EGPWS updated software version 030, which adds an MGB ''OIL OUT'' aural warning, in accordance with Honeywell International, Inc., Service Bulletin 965–1595–34–23, Revision 0, dated March 13, 2012. Before or during installation of the updated software, the ASB states the following must be complied with: ASB 92–63–027, Basic Issue, dated January 21, 2013, and CSN 92–089, Basic Issue, dated January 10, 2013.

Differences Between This AD and the Service Information

This AD requires compliance within 500 hours time-in-service, and the service information specifies certain dates and calendar times.

Costs of Compliance

We estimate that this AD will affect 44 helicopters of U.S. Registry.

We estimate that operators may incur the following costs in order to comply with this AD. Labor costs are estimated

at $85 per hour. The work hours and required parts costs are estimated as follows:

- .5 work hour to insert the RFM Supplement into the RFM.
- 8 work hours plus $2,200 for required parts to install an MGB failed pump sensor;
- 4 work hours plus $250 for required parts to install MGB vacuum switch wiring;
- 71.7 work hours plus $4,100 for required parts to install an MGB oil pressure auto bypass system;
- 1 work hour to activate AMS 7.1; and
- 1 work hour plus $500 for required parts to install EGPWS software.

The total cost of compliance for all actions will be about $14,377 per helicopter and $632,588 for the U.S. fleet.

Authority for This Rulemaking

Title 49 of the United States Code specifies the FAA's authority to issue rules on aviation safety. Subtitle I, section 106, describes the authority of the FAA Administrator. Subtitle VII: Aviation Programs, describes in more detail the scope of the Agency's authority.

We are issuing this rulemaking under the authority described in Subtitle VII, Part A, Subpart III, Section 44701: ''General requirements.'' Under that section, Congress charges the FAA with promoting safe flight of civil aircraft in air commerce by prescribing regulations for practices, methods, and procedures the Administrator finds necessary for safety in air commerce. This regulation is within the scope of that authority because it addresses an unsafe condition that is likely to exist or develop on products identified in this rulemaking action.

Regulatory Findings

This AD will not have federalism implications under Executive Order 13132. This AD will not have a substantial direct effect on the States, on the relationship between the national government and the States, or on the distribution of power and responsibilities among the various levels of government.

For the reasons discussed above, I certify that this AD:

(1) Is not a ''significant regulatory action'' under Executive Order 12866;

(2) Is not a ''significant rule'' under DOT Regulatory Policies and Procedures (44 FR 11034, February 26, 1979);

(3) Will not affect intrastate aviation in Alaska to the extent that it justifies making a regulatory distinction; and

(4) Will not have a significant economic impact, positive or negative, on a substantial number of small entities under the criteria of the Regulatory Flexibility Act.

We prepared an economic evaluation of the estimated costs to comply with this AD and placed it in the AD docket.

List of Subjects in 14 CFR Part 39

Air transportation, Aircraft, Aviation safety, Incorporation by reference, Safety.

Adoption of the Amendment

Accordingly, under the authority delegated to me by the Administrator, the FAA amends 14 CFR part 39 as follows:

PART 39—AIRWORTHINESS DIRECTIVES

■ 1. The authority citation for part 39 continues to read as follows:

Authority: 49 U.S.C. 106(g), 40113, 44701.

§ 39.13 [Amended]

■ 2. The FAA amends § 39.13 by adding the following new airworthiness directive (AD):

2015–11–10 Sikorsky Aircraft Corporation: Amendment 39–18173; Docket No. FAA–2014–0493; Directorate Identifier 2013–SW–019–AD.

(a) Applicability

This AD applies to Model S–92A helicopters, serial number (S/N) 920006 through 920179, certificated in any category.

(b) Unsafe Condition

This AD defines the unsafe condition as main gearbox (MGB) oil loss, which could lead to failure of the MGB and subsequent loss of control of the helicopter.

(c) Effective Date

This AD becomes effective July 14, 2015.

(d) Compliance

You are responsible for performing each action required by this AD within the specified compliance time unless it has already been accomplished prior to that time.

(e) Required Actions

Within 500 hours time-in-service:

(1) Insert a copy of the Sikorsky S–92A Rotorcraft Flight Manual (RFM) Supplement No. 45, Part I, dated July 30, 2012, into the RFM.

(2) For helicopters with S/N 920006 through 920132:

(i) Install an MGB failed pump sensor, Modification Kit Part Number (P/N) 92070–35007–011.

(ii) Install MGB vacuum switch wiring, Modification Kit P/N 92070–55039–013.

(3) For helicopters with S/N 920006 through 920179:

(i) Install an MGB auto bypass system, Modification Kit P/N 92070–55061–011.

(ii) Activate Aircraft Management System 7.1 software to show a new MGB ''OIL OUT'' visual warning.

(iii) Install enhanced ground proximity warning system software version 030.

(f) Special Flight Permit

Special flight permits are prohibited.

(g) Alternative Methods of Compliance (AMOC)

(1) The Manager, Boston Aircraft Certification Office, FAA, may approve AMOCs for this AD. Send your proposal to: Michael Schwetz, Aviation Safety Engineer, Boston Aircraft Certification Office, Engine & Propeller Directorate, FAA, 12 New England Executive Park, Burlington, Massachusetts 01803; telephone (781) 238–7761; email *michael.schwetz@faa.gov.*

(2) For operations conducted under a 14 CFR part 119 operating certificate or under 14 CFR part 91, subpart K, we suggest that you notify your principal inspector, or lacking a principal inspector, the manager of the local flight standards district office or certificate holding district office before operating any aircraft complying with this AD through an AMOC.

(h) Additional Information

Sikorsky Alert Service Bulletin (ASB) No. 92–63–024C, Revision C, dated October 7, 2011; Sikorsky ASBs 92–63–027 and 92–34–002, both Basic Issue and both dated January 21, 2013; Sikorsky Customer Service Notice (CSN) 92–068C, Revision C, dated March 27, 2012; CSN 92–069A, Revision A, dated November 10, 2011; CSN 92–089, Basic Issue, dated January 10, 2013; and Honeywell International, Inc., Service Bulletin 965–1595–34–23, Revision 0, dated March 13, 2012, which are not incorporated by reference, contain additional information about the subject of this AD. For service information identified in this AD, contact Sikorsky Aircraft Corporation, Customer Service Engineering, 124 Quarry Road, Trumbull, CT 06611; telephone 1–800–Winged–S or 203–416–4299; email *sikorskywcs@sikorsky.com;* or at *http://www.sikorsky.com* and Honeywell International, Inc., at 15001 NE. 36 Street, Redmond, WA 98052–5316, telephone (800) 601–3099; or at *www.myaerospace.com.* You may review a copy of this service information at the FAA, Office of the Regional Counsel, Southwest Region, 2601 Meacham Blvd., Room 663, Fort Worth, Texas 76137.

(i) Subject

Joint Aircraft Service Component (JASC) Code: 6320 Main Rotor Gearbox.

(j) Material Incorporated by Reference

(1) The Director of the Federal Register approved the incorporation by reference of the service information listed in this paragraph under 5 U.S.C. 552(a) and 1 CFR part 51.

(2) You must use this service information as applicable to do the actions required by this AD, unless the AD specifies otherwise.

(i) Sikorsky S–92A Rotorcraft Flight Manual Supplement No. 45, Part I, dated July 30, 2012.

(ii) Reserved.

(3) For Sikorsky service information identified in this AD, contact Sikorsky Aircraft Corporation, Customer Service

Engineering, 124 Quarry Road, Trumbull, CT 06611; telephone 1–800–Winged-S or 203–416–4299; email *sikorskywcs@sikorsky.com;* or at *http://www.sikorsky.com.*

(4) You may view this service information at FAA, Office of the Regional Counsel, Southwest Region, 2601 Meacham Blvd., Room 663, Fort Worth, Texas 76137. For information on the availability of this material at the FAA, call (817) 222–5110.

(5) You may view this service information that is incorporated by reference at the National Archives and Records Administration (NARA). For information on the availability of this material at NARA, call (202) 741–6030, or go to: *http://www.archives.gov/federal-register/cfr/ibr-locations.html.*

Issued in Fort Worth, Texas, on May 29, 2015.

Lance T. Gant,

Acting Directorate Manager, Rotorcraft Directorate, Aircraft Certification Service.

[FR Doc. 2015–13844 Filed 6–8–15; 8:45 am]

BILLING CODE 4910–13–P

DEPARTMENT OF TRANSPORTATION

Federal Aviation Administration

14 CFR Part 71

[Docket No. FAA–2015–1650; Airspace Docket No. 14–AEA–8]

RIN 2120–AA66

Amendment of VOR Federal Airways; Northeastern United States

AGENCY: Federal Aviation Administration (FAA), DOT.

ACTION: Final rule.

SUMMARY: This action amends VOR Federal Airways V–31, V–36, V–98, V–164 and V–252 by removing from the route descriptions, those segments that extend into and/or through Canadian airspace. This action is necessary to match route changes made by Canada as part of the Windsor-Toronto-Montreal (W–T–M) project. The route segments in Canada are no longer in effect; therefore, the United States has issued Notices to Airmen (NOTAM) identifying the affected segments as ''not authorized'' pending the deletion of the segments from the route descriptions through this rulemaking action.

DATES: Effective date: 0901 UTC, August 20, 2015. The Director of the Federal Register approves this incorporation by reference action under 1 CFR part 51, subject to the annual revision of FAA Order 7400.9 and publication of conforming amendments.

ADDRESSES: FAA Order 7400.9Y, Airspace Designations and Reporting Points, and subsequent amendments can be viewed online at *http://www.faa.gov/air_traffic/publications/.* The Order is also available for inspection at the National Archives and Records Administration (NARA). For information on the availability of this material at NARA, call (202) 741–6030, or go to *http://www.archives.gov/federal_register/code_of_federal-regulations/ibr_locations.html.*

FAA Order 7400.9, Airspace Designations and Reporting Points, is published yearly and effective on September 15. For further information, you can contact the Airspace Policy and Regulations Group, Federal Aviation Administration, 800 Independence Avenue SW., Washington, DC 20591; telephone: (202) 267–8783.

FOR FURTHER INFORMATION CONTACT: Paul Gallant, Airspace Policy and Regulations Group, Office of Airspace Services, Federal Aviation Administration, 800 Independence Avenue SW., Washington, DC 20591; telephone: (202) 267–8783.

SUPPLEMENTARY INFORMATION:

Authority for This Rulemaking

The FAA's authority to issue rules regarding aviation safety is found in Title 49 of the United States Code. Subtitle I, Section 106 describes the authority of the FAA Administrator. Subtitle VII, Aviation Programs, describes in more detail the scope of the agency's authority. This rulemaking is promulgated under the authority described in Subtitle VII, Part A, Subpart I, Section 40103. Under that section, the FAA is charged with prescribing regulations to assign the use of the airspace necessary to ensure the safety of aircraft and the efficient use of airspace. This regulation is within the scope of that authority as it is merely an editorial change to the legal descriptions of V–31, V–36, V–98, V–164 and V–252 to reflect changes in the Canadian route structure.

Background

This action amends VOR Federal airways V–31, V–36, V–98, V–164 and V–252 as a result of the Windsor-Toronto-Montreal (W–T–M) and Northeast United States Cross-border Airspace Modernization and Redesign initiative. NavCanada, in an effort to transition to an Area Navigation (RNAV) route system, removed a number of conventional airways, many of which crossed the United States/Canadian border. The airways listed above with the exception of V–98 were part of that initiative that became effective on November 13, 2014 (79 FR 57758). Canadian segments of V–98 were subsequently removed by Canada in January 2015. Coordination for the modification of the Federal airways listed above was not completed in time for inclusion in the November 13, 2014, docket action. Currently, the United States has issued regulatory Notices to Airman (NOTAM) classifying the segments of the above listed airways lying within Canadian airspace as ''not authorized.''

This action is required to match the changes in the Canadian route structure. It will enhance safety within the National Airspace System and will facilitate a seamless air traffic route system between the two countries.

Availability and Summary of Documents for Incorporation by Reference

This document amends FAA Order 7400.9Y, Airspace Designations and Reporting Points, dated August 6, 2014, and effective September 15, 2014. FAA Order 7400.9Y is publicly available as listed in the **ADDRESSES** section of this final rule. FAA Order 7400.9Y lists Class A, B, C, D, and E airspace areas, air traffic service routes, and reporting points.

The Rule

This action amends Title 14 Code of Federal Regulations (14 CFR) part 71 by removing those former route segments in Canadian airspace from the descriptions of VOR Federal airways V–31, V–36, V–98, V–164 and V–252. This action aligns the United States airways with route changes instituted by Canada as part of NavCanada's W–T–M project.

The following is a summary of the specific changes by route. Where new navigation aid radials are designated, both True and Magnetic degrees are stated. Otherwise, only True degrees are shown.

V–31 The segment between the intersection of the Rochester 279° and the Toronto, Canada 150° radials is removed and a new end point formed by the intersection of the Rochester 279° and the Buffalo, NY 023°(T)/031°(M) radials is inserted.

V–36 The segments between Thunder Bay, ON, Canada and the intersection of the Toronto and Buffalo radials is removed, The amended route extends between Buffalo, NY and the intersection of the LaGuardia, NY 310° and the Stillwater, NJ 043° radials as currently published.

V–98 The segments between Windsor, ON, Canada and St. Jean, PQ, Canada are removed.

V–164 The segment between Toronto, ON, Canada and Buffalo, NY is removed. The amended route extends

between Buffalo and East Texas, PA as currently published.

V–252 The segment between Toronto, ON, Canada and the intersection of the Toronto 116° and the Geneseo, NY 305° radials is removed. A new start point formed by the intersection of the Buffalo, NY 023°(T)/031°(M) and the Geneseo 305° radials is inserted. The remainder of the route to Dupont, DE, is unchanged,

In the regulatory text, below, only True degrees are listed when defining radials.

Since this action involves removing from the descriptions of VOR Federal airways V–31, V–36, V–98, V–164 and V–252, those route segments in Canada that have previously been cancelled, I find that notice and public procedures under 5 U.S.C. 553(b) are unnecessary.

Regulatory Notices and Analyses

The FAA has determined that this regulation only involves an established body of technical regulations for which frequent and routine amendments are necessary to keep them operationally current. Therefore, this regulation: (1) Is not a ''significant regulatory action'' under Executive Order 12866; (2) is not a ''significant rule'' under DOT Regulatory Policies and Procedures (44 FR 11034; February 26, 1979); and (3) does not warrant preparation of a Regulatory Evaluation as the anticipated impact is so minimal. Since this is a routine matter that only affects air traffic procedures and air navigation, it is certified that this rule, when promulgated, does not have a significant economic impact on a substantial number of small entities under the criteria of the Regulatory Flexibility Act.

Domestic VOR Federal Airways are published in paragraph 6010(a) of FAA Order 7400.9Y, dated August 6, 2014, and effective September 15, 2014, which is incorporated by reference in 14 CFR 71.1. The VOR Federal Airways listed in this document will be published subsequently in the Order.

Environmental Review

The FAA has determined that this action qualifies for categorical exclusion under the National Environmental Policy Act in accordance with FAA Order 1050.1E, Environmental Impacts: Policies and Procedures, paragraph 311k. This airspace action consists of editorial changes only and is not expected to cause any potentially significant environmental impacts, and no extraordinary circumstances exist that warrant preparation of an environmental assessment.

List of Subjects in 14 CFR Part 71

Airspace, Incorporation by reference, Navigation (air).

Adoption of the Amendment

In consideration of the foregoing, the Federal Aviation Administration amends 14 CFR part 71 as follows:

PART 71—DESIGNATION OF CLASS A, B, C, D, AND E AIRSPACE AREAS; AIR TRAFFIC SERVICE ROUTES; AND REPORTING POINTS

■ 1. The authority citation for 14 CFR part 71 continues to read as follows:

Authority: 49 U.S.C. 106(f), 106(g), 40103, 40113, 40120; E.O. 10854, 24 FR 9565, 3 CFR, 1959–1963 Comp., p. 389.

§ 71.1 [Amended]

■ 2. The incorporation by reference in 14 CFR 71.1 of the Federal Aviation Administration Order 7400.9Y, Airspace Designations and Reporting Points, dated August 6, 2014, and effective September 15, 2014, is amended as follows:

Paragraph 6010(a)—Domestic VOR Federal Airways

* * * * *

V–31 [Amended]

From Patuxent River, MD; INT Patuxent River 338° and Nottingham, MD, 128° radials; Nottingham. From Baltimore, MD; INT Baltimore 004° and Harrisburg, PA, 147° radials; Harrisburg; Selinsgrove, PA; Williamsport, PA; Elmira, NY; INT Elmira 002° and Rochester, NY, 120° radials; Rochester; to INT Rochester 279° and Buffalo, NY 023° radials.

V–36 [Amended]

From Buffalo, NY; Elmira, NY; INT Elmira 110° and LaGuardia, NY, 310° radials; to INT LaGuardia 310° and Stillwater, NJ, 043° radials.

V–98 [Amended]

From Dayton, OH; INT Dayton 358° and Carleton, MI, 243° radials; to INT Carleton 243° and Waterville, OH, 321° radials.

V–164 [Amended]

From Buffalo, NY; Wellsville, NY; Stonyfork, PA; Williamsport, PA; INT Williamsport 129° and East Texas, PA, 315° radials; to East Texas.

V–252 [Amended]

From INT Buffalo, NY 023° and Geneseo, NY, 305° radials; Geneseo; Binghamton, NY; Huguenot, NY; INT Huguenot 196° and Robbinsville, NJ, 351° radials; Robbinsville; to Dupont, DE.

Issued in Washington, DC, on June 2, 2015.

Gary A. Norek,

Manager, Airspace Policy and Regulations Group.

[FR Doc. 2015–13980 Filed 6–8–15; 8:45 am]

BILLING CODE 4910–13–P

DEPARTMENT OF COMMERCE

National Oceanic and Atmospheric Administration

15 CFR Part 902

50 CFR Part 660

[Docket No. 140528460–5498–03]

RIN 0648–BE25

Fisheries off West Coast States; Highly Migratory Fisheries; California Swordfish Drift Gillnet Fishery; Vessel Monitoring System Requirements

AGENCY: National Marine Fisheries Service (NMFS), National Oceanic and Atmospheric Administration (NOAA), Commerce.

ACTION: Final rule; effectiveness of collection-of-information requirements.

SUMMARY: NMFS announces approval by the Office of Management and Budget (OMB) of collection-of-information requirements contained in regulations pertaining to the U.S. West Coast drift gillnet (DGN) fishery in a final rule that published on February 26, 2015, pursuant to the Paperwork Reduction Act of 1995 under OMB control number 0648–0498. The intent of this final rule is to publish the OMB control number for the collection-of-information requirements associated with the vessel monitoring system (VMS) regulations and to inform the public of their effectiveness.

DATES: This final rule is effective July 9, 2015. Amendments to paragraphs (l), (o), and (p) of § 660.705 and paragraphs (f)(2) through (g)(5) of § 660.713 published at 80 FR 10392 (February 26, 2015) are effective on July 9, 2015.

ADDRESSES: Written comments regarding burden-hour estimates or other aspects of the collection-of-information requirements contained in this final rule may be submitted to the Regional Administrator, NMFS, West Coast Regional Office, 7600 Sand Point Way, NE., Bldg. 1, Seattle, WA. 98115–0070, or *RegionalAdministrator.WCRHMS@noaa.gov*, and by email to *OIRA_Submission@omb.eop.gov*, or fax to (202) 395–7285.

FOR FURTHER INFORMATION CONTACT: Amber Rhodes, NMFS, (562) 980–3231, or *Amber.Rhodes@noaa.gov*.

SUPPLEMENTARY INFORMATION: The DGN fishery is managed under the Fishery Management Plan for U.S. West Coast Fisheries for Highly Migratory Species, which was prepared by the Pacific Fishery Management Council and is

implemented under the authority of the Magnuson-Stevens Fishery Conservation and Management Act (MSA), 16 U.S.C. 1801, *et seq.,* by regulations at 50 CFR part 660.

Background

A final rule to add regulations at 50 CFR part 660, subpart K, to require use of a NMFS-approved VMS and to institute a 48-hour pre-trip call-in notification requirement for DGN vessel owners and operators, was published in the **Federal Register** on February 26, 2015 (80 FR 10392). The requirements of that final rule, other than the collection-of-information requirements associated with VMS requirements, were effective on March 30, 2015. Because OMB approval of the collection-of-information requirements had not been received by the date that the final rule was published, the effective date of the VMS requirements was delayed.

OMB approved the collection-of-information requirements contained in the final rule on May 5, 2015. Accordingly, this final rule makes effective the collection-of-information requirements at § 660.705 and § 660.713, which were amended in the February 26, 2015, final rule.

Classification

This final rule has been determined to be not significant for purposes of Executive Order 12866.

This final rule contains a collection-of-information requirements subject to the Paperwork Reduction Act (PRA) under OMB Control Number 0648–0498. The public reporting burden for compliance with the these requirements is estimated to include a one-time, 4-hour response time for installing a VMS unit and a 1-hour response time annually to maintain and repair a unit. Activation and exemption reports are estimated to average 5 minutes per response, including time to review instructions for, and prepare and submit the reports.

Notwithstanding any other provision of the law, no person is required to respond to, and no person shall be subject to penalty for failure to comply with, a collection-of-information subject to the requirements of the PRA, unless that collection-of-information displays a currently valid OMB control number.

List of Subjects in 15 CFR Part 902

Reporting and recordkeeping requirements.

Dated: June 3, 2015.

Samuel D. Rauch III,

Deputy Assistant Administrator for Regulatory Programs, National Marine Fisheries Service.

For the reasons set out in the preamble, NMFS amends 15 CFR part 902 as follows:

Title 15—Commerce and Foreign Trade

PART 902—NOAA INFORMATION COLLECTION REQUIREMENT UNDER THE PAPERWORK REDUCTION ACT: OMB CONTROL NUMBERS

■ 1. The authority citation for part 902 continues to read as follows:

Authority: 44 U.S.C. 3501 *et seq.*

■ 2. In § 902.1, in the table in paragraph (b), under the entry ''50 CFR'', add entries in alphanumeric order for ''660.705(l), (o) and (p)'' and ''660.713(f)(2) through (g)(5)'' to read as follows:

§ 902.1 OMB control numbers assigned pursuant to the Paperwork Reduction Act.

* * * * *

(b) * * *

CFR part or section where the information collection requirement is located	Current OMB control number (all numbers begin with 0648–)
* * * * *	
50 CFR	
* * * * *	
660.705(l), (o), (p)	–0498
* * * * *	
660.713(f)(2) through (g)(5)	–0498.
* * * * *	

[FR Doc. 2015–14002 Filed 6–8–15; 8:45 am]

BILLING CODE 3510–22–P

DEPARTMENT OF HOMELAND SECURITY

Coast Guard

33 CFR Part 100

[Docket No. USCG–2015–0441]

Special Local Regulation; Annual Marine Events on the Colorado River, Between Davis Dam (Bullhead City, Arizona) and Headgate Dam (Parker, Arizona) Within the San Diego Captain of the Port Zone

AGENCY: Coast Guard, DHS.

ACTION: Notice of enforcement of regulation.

SUMMARY: The Coast Guard will enforce a marine event special local regulation on the navigable waters of the Colorado River between Davis Camp to Rotary Park in Bullhead City, AZ in support of the annual Bullhead City River Regatta on August 8, 2015, from 6 a.m. to 6 p.m. This action is necessary to provide for the safety of the participants, crew, spectators, safety vessels, and general users of the waterway. During the enforcement period, persons and vessels are prohibited from entering into, transiting through, or anchoring within this regulated area unless authorized by the Captain of the Port, or his designated representative.

DATES: The special local regulations listed in 33 CFR 100.1102, Table 1, Item 16, will be enforced from 6 a.m. to 6 p.m. on August 8, 2015.

FOR FURTHER INFORMATION CONTACT: If you have questions on this publication, call or email Petty Officer Nick Bateman, Waterways Management, U.S. Coast Guard Sector San Diego, CA; telephone (619) 278–7656, email *D11-PF-MarineEventsSanDiego@uscg.mil.*

SUPPLEMENTARY INFORMATION: The Coast Guard will enforce the marine event special local regulation for the annual Bullhead City River Regatta in 33 CFR 100.1102, Table 1, Item 16 on August 8, 2015, from 6 a.m. to 6 p.m.

Under the provisions of 33 CFR 100.1102, persons and vessels are prohibited from entering into, transiting through, or anchoring within this regulated area of the Colorado River unless authorized by the Captain of the Port, or his designated representative. The Coast Guard may be assisted by other Federal, State, or local law enforcement agencies in enforcing this regulation.

This document is issued under authority 33 CFR 100.1102 and 5 U.S.C. 552(a). In addition to this document in the **Federal Register**, the Coast Guard will provide the maritime community with advance notification of this enforcement period via the Local Notice to Mariners, Broadcast Notice to Mariners, and local advertising by the event sponsor.

If the Coast Guard determines that the regulated area need not be enforced for the full duration stated on this document, then a Broadcast Notice to Mariners or other communications coordinated with the event sponsor will grant general permission to enter the regulated area.

Dated: May 22, 2015.

J.S. Spaner,

Captain, U. S. Coast Guard, Captain of the Port San Diego.

[FR Doc. 2015–14086 Filed 6–8–15; 8:45 am]

BILLING CODE 9110–04–P

DEPARTMENT OF HOMELAND SECURITY

Coast Guard

33 CFR Part 117

[Docket No. USCG–2015–0462]

Drawbridge Operation Regulation; China Basin, San Francisco, CA

AGENCY: Coast Guard, DHS.

ACTION: Notice of deviation from drawbridge regulation.

SUMMARY: The Coast Guard has issued a temporary deviation from the operating schedule that governs the 3rd Street Drawbridge across China Basin, mile 0.0 at San Francisco, CA. The deviation is necessary to allow participants to cross the bridge during the San Francisco Marathon. This deviation allows the bridge to remain in the closed-to-navigation position during the deviation period.

DATES: This deviation is effective from 6 a.m. to 2:30 p.m. on July 26, 2015.

ADDRESSES: The docket for this deviation, [USCG–2015–0462], is available at *http://www.regulations.gov*. Type the docket number in the ''SEARCH'' box and click ''SEARCH.'' Click on Open Docket Folder on the line associated with this deviation. You may also visit the Docket Management Facility in Room W12–140 on the ground floor of the Department of Transportation West Building, 1200 New Jersey Avenue SE., Washington, DC 20590, between 9 a.m. and 5 p.m., Monday through Friday, except Federal holidays.

FOR FURTHER INFORMATION CONTACT: If you have questions on this temporary deviation, call or email David H. Sulouff, Chief, Bridge Section, Eleventh Coast Guard District; telephone 510–437–3516, email *David.H.Sulouff@uscg.mil*. If you have questions on viewing the docket, call Cheryl Collins, Program Manager, Docket Operations, telephone 202–366–9826.

SUPPLEMENTARY INFORMATION: The City of San Francisco has requested a temporary change to the operation of the 3rd Street Drawbridge, mile 0.0, over China Basin, at San Francisco, CA. The drawbridge navigation span provides a vertical clearance of 3 feet above Mean High Water in the closed-to-navigation position. The draw opens on signal if at least one hour notice is given, as required by 33 CFR 117.149. Navigation on the waterway is recreational.

The drawspan will be secured in the closed-to-navigation position from 6 a.m. to 2:30 p.m. on July 26, 2015, to allow participants to cross the bridge during the San Francisco Marathon. This temporary deviation has been coordinated with the waterway users. No objections to the proposed temporary deviation were raised.

Vessels able to pass through the bridge in the closed position may do so at anytime. The bridge will be able to open for emergencies and there is no immediate alternate route for vessels to pass. The Coast Guard will also inform the users of the waterway through our Local and Broadcast Notices to Mariners of the change in operating schedule for the bridge so that vessels can arrange their transits to minimize any impact caused by the temporary deviation.

In accordance with 33 CFR 117.35(e), the drawbridge must return to its regular operating schedule immediately at the end of the effective period of this temporary deviation. This deviation from the operating regulations is authorized under 33 CFR 117.35.

Dated: May 28, 2015.

D.H. Sulouff,

District Bridge Chief, Eleventh Coast Guard District.

[FR Doc. 2015–14067 Filed 6–8–15; 8:45 am]

BILLING CODE 9110–04–P

DEPARTMENT OF HOMELAND SECURITY

Coast Guard

33 CFR Part 165

[Docket No. USCG–2015–0228]

Safety Zones; Fireworks Events in Captain of the Port New York Zone

AGENCY: Coast Guard, DHS.

ACTION: Notice of enforcement of regulation.

SUMMARY: The Coast Guard will enforce various safety zones within the Captain of the Port New York Zone on the specified dates and times. This action is necessary to ensure the safety of vessels and spectators from hazards associated with fireworks displays. During the enforcement period, no person or vessel may enter the safety zones without permission of the Captain of the Port (COTP).

DATES: The regulation for the safety zones described in 33 CFR 165.160 will be enforced on the dates and times listed under **SUPPLEMENTARY INFORMATION**.

FOR FURTHER INFORMATION CONTACT: If you have questions on this document, call or email Lieutenant Douglas Neumann, Coast Guard; telephone 718–354–4154, email *douglas.w.neumann@uscg.mil*.

SUPPLEMENTARY INFORMATION: The Coast Guard will enforce the safety zones listed in 33 CFR 165.160 on the specified dates and times as indicated in Table 1.

TABLE 1

1. The Boston Consulting Group, Liberty Island Safety Zone, 33 CFR 165.160(2.1).	• Launch site: A barge located in approximate position 40°41′16.5″ N. 074°02′23″ W. (NAD 1983), located in Federal Anchorage 20–C, about 360 yards east of Liberty Island. This Safety Zone is a 360-yard radius from the barge. • Date: June 12, 2015. • Time: 8:30 p.m.–9:45 p.m.
2. Heritage of Pride, Pier 40 Safety Zone, 33 CFR 165.160(5.14).	• Launch site: A barge located in approximate position 40°43′30″ N. 074°01′06.7″ W. (NAD 1983), in the vicinity of the Holland Tunnel Ventilator, 530 yards south of Pier 40, Manhattan, New York. This Safety Zone is a 240-yard radius from the barge. • Date: June 28, 2015. • Time: 09:15 p.m.–10:30 p.m.
3. Briggs Inc., Ellis Island Safety Zone, 33 CFR 165.160(2.2).	• Launch site: A barge located between Federal Anchorages 20–A and 20–B, in approximate position 40°41′45″ N. 074°02′09″ W. (NAD 1983) about 365 yards east of Ellis Island. This Safety Zone is a 360-yard radius from the barge. • Date: June 06, 2015. • Time: 10:00 p.m.–11:20 p.m.

TABLE 1—Continued

4. Havas Worldwide LLC, Pier 60 Safety Zone, 33 CFR 165.160(5.1).	• Launch site: A barge located in approximate position 40°44′49″ N. 074°01′02″ W. (NAD 1983), approximately 500 yards west of Pier 60, Manhattan, New York. This Safety Zone is a 360-yard radius from the barge. • Date: June 25, 2015. • Rain Date: June 26, 2015. • Time: 10:45 p.m.–12:15 a.m.
5. Ellis Island Medals of Honor, Liberty Island Safety Zone, 33 CFR 165.160(2.1).	• Launch site: A barge located in approximate position 40°41′16.5″ N. 074°02′23″ W. (NAD 1983), located in Federal Anchorage 20–C, about 360 yards east of Liberty Island. This Safety Zone is a 360-yard radius from the barge. • Date: May 09, 2015. • Time: 11:00 p.m.–12:10 a.m.
6. Big Shoulders, Liberty Island Safety Zone, 33 CFR 165.160(2.1).	• Launch site: A barge located in approximate position 40°41′16.5″ N. 074°02′23″ W. (NAD 1983), located in Federal Anchorage 20–C, about 360 yards east of Liberty Island. This Safety Zone is a 360-yard radius from the barge. • Date: June 20, 2015. • Time: 11:30 p.m.–11:45 p.m.

Under the provisions of 33 CFR 165.160, vessels may not enter the safety zones unless given permission from the COTP or a designated representative. Spectator vessels may transit outside the safety zones but may not anchor, block, loiter in, or impede the transit of other vessels. The Coast Guard may be assisted by other Federal, State, or local law enforcement agencies in enforcing this regulation.

This document is issued under authority of 33 CFR 165.160(a) and 5 U.S.C. 552(a). In addition to this notification in the **Federal Register**, the Coast Guard will provide mariners with advanced notification of enforcement periods via the Local Notice to Mariners and marine information broadcasts. If the COTP determines that a safety zone need not be enforced for the full duration stated in this document, a Broadcast Notice to Mariners may be used to grant general permission to enter the safety zone.

Dated: April 17, 2015.

G. Loebl,

Captain, U.S. Coast Guard, Captain of the Port New York.

[FR Doc. 2015–14103 Filed 6–8–15; 8:45 am]

BILLING CODE 9110–04–P

DEPARTMENT OF HOMELAND SECURITY

Coast Guard

33 CFR Part 165

[Docket No. USCG–2015–0349]

Safety Zone; Southern California Annual Firework Events for the San Diego Captain of the Port Zone

AGENCY: Coast Guard, DHS.

ACTION: Notice of enforcement of regulation.

SUMMARY: The Coast Guard will enforce the Big Bay Boom Fourth of July Fireworks safety zones on July 4, 2015. This reoccurring marine event occurs on the navigable waters of San Diego Bay in San Diego, California. This action is necessary to provide for the safety of the participants, crew, spectators, safety vessels, and general users of the waterway. During the enforcement period, persons and vessels are prohibited from entering into, transiting through, or anchoring within this regulated area unless authorized by the Captain of the Port, or his designated representative.

DATES: The regulations for the marine event listed in 33 CFR 165.1123, Table 1, Item 5, will be enforced from 8:30 p.m. to 10 p.m. on July 4, 2015.

FOR FURTHER INFORMATION CONTACT: If you have questions on this publication, call or email Petty Officer Nick Bateman, Waterways Management, U.S. Coast Guard Sector San Diego, CA; telephone (619) 278–7656, email *D11-PF-MarineEventsSanDiego@uscg.mil*.

SUPPLEMENTARY INFORMATION: The Coast Guard will enforce the four safety zones in San Diego Bay for the Big Bay Boom Fourth of July Fireworks Display in 33 CFR 165.1123, Table 1, Item 5 from 8:30 p.m. to 10 p.m.

Under the provisions of 33 CFR 165.1123, persons and vessels are prohibited from entering into, transiting through, or anchoring within the four 1,000 foot regulated area safety zones located in San Diego Bay from Shelter Island to the Embarcadero, specifically located around each tug and barge, unless authorized by the Captain of the Port, or his designated representative. Persons or vessels desiring to enter into or pass through the safety zones may request permission from the Captain of the Port or his designated representative. If permission is granted, all persons and vessels shall comply with the instructions of the Captain of the Port or designated representative. Spectator vessels may safely transit outside the regulated area, but may not anchor, block, loiter, or impede the transit of participants or official patrol vessels. The Coast Guard may be assisted by other Federal, State, or local law enforcement agencies in enforcing this regulation.

This document is issued under authority of 5 U.S.C. 552(a) and 33 CFR 165.1123. In addition to this publication in the **Federal Register**, the Coast Guard will provide the maritime community with advance notification of this enforcement period via the Local Notice to Mariners, Broadcast Notice to Mariners, and local advertising by the event sponsor. If the Coast Guard determines that the regulated area need not be enforced for the full duration stated on this document, then a Broadcast Notice to Mariners or other communications coordinated with the event sponsor to grant general permission to enter the regulated area.

Dated: May 22, 2015.

J.S. Spaner,

Captain, U.S. Coast Guard, Captain of the Port San Diego.

[FR Doc. 2015–14109 Filed 6–8–15; 8:45 am]

BILLING CODE 9110–04–P

DEPARTMENT OF HOMELAND SECURITY

Coast Guard

33 CFR Part 165

[Docket No. USCG–2015–0348]

Safety Zone; Southern California Annual Firework Events for the San Diego Captain of the Port Zone

AGENCY: Coast Guard, DHS.

ACTION: Notice of enforcement of regulation.

SUMMARY: The Coast Guard will enforce the Coronado Glorietta Bay Fourth of July Fireworks safety zone on July 4, 2015. This reoccurring annual marine event occurs on the navigable waters of Glorietta Bay, a subsection of San Diego Bay in San Diego, California. This action is necessary to provide for the safety of the participants, crew, spectators, safety vessels, and general users of the waterway. During the enforcement period, persons and vessels are prohibited from entering into, transiting through, or anchoring within this regulated area unless authorized by the Captain of the Port, or his designated representative.

DATES: The regulations for the marine event listed in 33 CFR 165.1123, Table 1, Item 3, will be enforced from 8:30 p.m. to 10 p.m. on July 4, 2015.

FOR FURTHER INFORMATION CONTACT: If you have questions on this publication, call or email Petty Officer Nick Bateman, Waterways Management, U.S. Coast Guard Sector San Diego, CA; telephone (619) 278–7656, email *D11–PF-MarineEventsSanDiego@uscg.mil*.

SUPPLEMENTARY INFORMATION: The Coast Guard will enforce the safety zone in San Diego Bay for the Coronado Glorietta Bay Fourth of July Fireworks Display listed in 33 CFR 165.1123, Table 1, Item 3 from 8:30 p.m. to 10 p.m.

Under the provisions of 33 CFR 165.1123, persons and vessels are prohibited from entering into, transiting through, or anchoring within the 800 foot regulated area safety zone around the tug and barge unless authorized by the Captain of the Port, or his designated representative. Persons or vessels desiring to enter into or pass through the safety zone may request permission from the Captain of the Port or his designated representative. If permission is granted, all persons and vessels shall comply with the instructions of the Captain of the Port or designated representative. Spectator vessels may safely transit outside the regulated area, but may not anchor, block, loiter, or impede the transit of participants or official patrol vessels. The Coast Guard may be assisted by other Federal, State, or local law enforcement agencies in enforcing this regulation.

This document is issued under authority of 5 U.S.C. 552(a) and 33 CFR 165.1123. In addition to this document in the **Federal Register**, the Coast Guard will provide the maritime community with advance notification of this enforcement period via the Local Notice to Mariners, Broadcast Notice to Mariners, and local advertising by the event sponsor.

If the Coast Guard determines that the regulated area need not be enforced for the full duration stated on this document, then a Broadcast Notice to Mariners or other communications coordinated with the event sponsor will grant general permission to enter the regulated area.

Dated: May 22, 2015.

J.S. Spaner,

Captain, U.S. Coast Guard, Captain of the Port San Diego.

[FR Doc. 2015–14068 Filed 6–8–15; 8:45 am]

BILLING CODE 9110–04–P

ENVIRONMENTAL PROTECTION AGENCY

40 CFR Part 52

[EPA–R01–OAR–2013–0818; A–1–FRL–9928–86–Region–1]

Approval and Promulgation of Air Quality Implementation Plans; Rhode Island; Decommissioning of Stage II Vapor Recovery Systems and Amending Stage I Vapor Recovery Requirements

AGENCY: Environmental Protection Agency (EPA).

ACTION: Final rule.

SUMMARY: The Environmental Protection Agency (EPA) is approving a State Implementation Plan (SIP) revision submitted by the State of Rhode Island Department of Environmental Management. This revision includes regulatory amendments that allow gasoline dispensing facilities (GDFs) to decommission their Stage II vapor recovery systems as of December 25, 2013, and a demonstration that such removal is consistent with the Clean Air Act and EPA guidance. This revision also includes regulatory amendments that strengthen Rhode Island's requirements for Stage I vapor recovery systems at GDFs. The intended effect of this action is to approve Rhode Island's revised vapor recovery regulation. This action is being taken in accordance with the Clean Air Act.

DATES: This rule is effective on July 9, 2015.

ADDRESSES: EPA has established a docket for this action under Docket Identification No. EPA–R01–OAR–2013–0818. All documents in the docket are listed on the *www.regulations.gov* Web site. Although listed in the index, some information is not publicly available, *i.e.,* CBI or other information whose disclosure is restricted by statute. Certain other material, such as copyrighted material, is not placed on the Internet and will be publicly available only in hard copy form. Publicly available docket materials are available either electronically through *www.regulations.gov* or in hard copy at the U.S. Environmental Protection Agency, EPA New England Regional Office, Office of Ecosystem Protection, Air Quality Planning Unit, 5 Post Office Square—Suite 100, Boston, MA. EPA requests that if at all possible, you contact the contact listed in the **FOR FURTHER INFORMATION CONTACT** section to schedule your inspection. The Regional Office's official hours of business are Monday through Friday, 8:30 a.m. to 4:30 p.m., excluding legal holidays.

Copies of the documents relevant to this action are also available for public inspection during normal business hours, by appointment at Office of Air Resources, Department of Environmental Management, 235 Promenade Street, Providence, RI 02908–5767.

FOR FURTHER INFORMATION CONTACT: Ariel Garcia, Air Quality Planning Unit, U.S. Environmental Protection Agency, EPA New England Regional Office, 5 Post Office Square, Suite 100 (mail code: OEP05–2), Boston, MA 02109–3912, telephone number (617) 918–1660, fax number (617) 918–0660, email *garcia.ariel@epa.gov.*

SUPPLEMENTARY INFORMATION: Throughout this document whenever ''we,'' ''us,'' or ''our'' is used, we mean EPA.

Organization of this document. The following outline is provided to aid in locating information in this preamble.

I. Background and Purpose
II. Response to Comments
III. Final Action
IV. Incorporation by Reference
V. Statutory and Executive Order Reviews

I. Background and Purpose

On October 24, 2014 (79 FR 63591), EPA published a Notice of Proposed Rulemaking (NPR) for the State of Rhode Island. The NPR proposed approval of Rhode Island's revised Air Pollution Control Regulation 11, ''Petroleum Liquids Marketing and Storage,'' that had been amended to allow the decommissioning of Stage II vapor recovery systems and to strengthen Stage I vapor recovery requirements. The formal SIP revision was submitted by the Rhode Island Department of Environmental Management (DEM) on December 13, 2013 and also included a demonstration

that the decommissioning of Stage II vapor recovery systems at gasoline dispensing facilities (GDFs) is consistent with the Clean Air Act and EPA guidance.

A detailed discussion of Rhode Island's December 13, 2013 SIP revision and EPA's rationale for proposing approval of the SIP revision were provided in the NPR and will not be restated in this notice, except to the extent relevant to our responses to public comments we received on our proposal.

II. Response to Comments

EPA received one comment on the NPR from Ted Tiberi, ARID Technologies, Inc. That comment is summarized below with EPA's response.

Comment: The commenter stated its opposition to EPA's proposed approval of Rhode Island's revised Air Pollution Control Regulation 11. The commenter believes the Clean Air Act (CAA) section 110(l) demonstration included in Rhode Island's December 13, 2013 SIP submittal is flawed and that there are significant emission reduction losses (*i.e.* ''increased emissions'') resulting from the removal of the Stage II program requirements in Rhode Island. The commenter submitted graphs and calculations in support of its claims, purporting to show the levels of foregone emissions reduction that would result from implementation of Rhode Island's SIP revision request. The commenter also asserts that the increased emissions represent a significant environmental, health and safety risk, and that a disproportionate share of the risks will be borne by motorists refueling vehicles not equipped with onboard refueling vapor recovery (ORVR) systems.

Response: EPA disagrees with ARID Technologies' assertion that Rhode Island's CAA section 110(l) demonstration is flawed and that there will be impermissibly significant increased emissions from this action. Rhode Island's section 110(l) demonstration was performed in accordance with EPA's final rule determining that ORVR is now in widespread use in the national motor vehicle fleet (77 FR 28772, May 16, 2012) and EPA's ''Guidance on Removing Stage II Gasoline Vapor Control Programs from State Implementation Plans and Assessing Comparable Measures'' (EPA–457/B–12–001, August 7, 2012), hereafter, EPA's August 7, 2012 Guidance (a copy of this guidance has been placed in the public docket for this action).

The Rhode Island rule allows GDFs to decommission Stage II systems as of December 25, 2013, and requires GDFs to decommission their Stage II systems by the end of 2017 unless, by December 22, 2017, a GDF is equipped with an ORVR-compatible Stage II system or installs air pollution control systems to control tank excess vent emissions resulting from Stage II systems that are incompatible with ORVR. Such GDFs, with Stage II systems operational beyond the December 22, 2017 date, are required to continue to operate and maintain their Stage II vapor recovery systems in accordance with Rhode Island's regulations, until the time when such Stage II vapor recovery system is ever decommissioned. Appendix Table A–1 of EPA's August 7, 2012 Guidance illustrates that by the end of 2017, about 87% of the vehicles in the national motor vehicle fleet will be equipped with ORVR. The number of ORVR-equipped vehicles in Rhode Island will likely be even higher due to Rhode Island having a more accelerated motor vehicle fleet turnover when compared to the national motor vehicle fleet.[1] Appendix Table A–1 also illustrates that by the end of 2017, over 90% of gasoline dispensed nationally will be to ORVR-equipped vehicles, which is also likely to be higher in Rhode Island due to a newer motor vehicle fleet. At that point in time, since a vast majority of Rhode Island vehicles being refueled at gasoline dispensing facilities will be equipped with ORVR systems, the ORVR systems will be controlling the volatile organic compound (VOC) emissions, making Stage II vapor recovery systems a redundant, and potentially incompatible, emissions control technology in Rhode Island. Therefore, removing the Stage II systems is not expected to result in a significant emissions increase, but is expected to avoid emissions increases resulting from the incompatibility of some Stage II systems with ORVR controls.

EPA also disagrees with the comment that the increased emissions the commenter asserts will result from removal of Stage II controls represent a significant environmental, health and safety risk. EPA's August 7, 2012 Guidance states that ''EPA believes it is reasonable to conclude that the incremental emissions control that Stage II achieves beyond ORVR is *de minimis* if it is less than 10 percent of the area-wide emissions inventory associated with refueling highway motor vehicles.'' As noted in the NPR, Rhode Island appropriately calculated the increase in refueling-associated emissions from the decommissioning of Stage II systems in 2013 as 7.2 percent, thus meeting this *de minimis* threshold. As also noted in the NPR, the increase in emissions from Stage II system decommissioning calculated by Rhode Island for 2013 (69 tons of VOC) are only about 0.3 percent of the total anthropogenic VOC emissions in Rhode Island (see EPA's 2011 National Emissions Inventory database Version 1 at *www.epa.gov/ttn/chief/net/2011inventory.html*). Also, as explained in EPA's ORVR rulemaking and in EPA's August 7, 2012 Guidance, these foregone emissions reductions in the near term continue to diminish rapidly over time as ORVR phase-in continues. Therefore, since the *de minimis* criteria discussed in EPA's August 7, 2012 Guidance have been met, EPA is approving Rhode Island's SIP revision.

Furthermore, we note that Rhode Island's revised Regulation 11 also includes new Stage I vapor recovery requirements that will lead to additional emission reductions. Specifically, the regulation requires GDFs to upgrade their Stage I vapor recovery systems to CARB-certified Stage I Enhanced Vapor Recovery (EVR) systems or a Stage I vapor recovery system composed of EVR system components (Stage I EVR component systems). The upgrade to Stage I EVR systems or Stage I EVR component systems is required upon facility start-up for facilities beginning operation or installing a fuel storage tank as of December 25, 2013. In addition, as of December 25, 2013, any component of a pre-existing Stage I vapor recovery system that is replaced is required to be replaced with a CARB-certified Stage I EVR component. The Rhode Island regulation further requires that all Stage I systems be CARB-certified Stage I EVR systems or Stage I EVR component systems by December 25, 2020. CARB-certified Stage I EVR systems have been certified to achieve a 98 percent reduction in VOC emissions, as compared to 95 percent for pre-EVR Stage I systems. Thus, when pre-EVR Stage I systems in Rhode Island are replaced with CARB-certified Stage I EVR systems, a greater emission reduction will be achieved. Also, when a component of a pre-EVR Stage I system is replaced with a CARB-certified Stage I EVR component, a

[1] Rhode Island's December 13, 2013 SIP revision includes an analysis of vehicle registration data obtained from the Rhode Island Department of Motor Vehicles, which illustrates that by December 4, 2012, the fraction of gasoline vehicles in Rhode Island equipped with ORVR was 73.1%. This is a slightly more accelerated fleet turn-over estimate than EPA's end of the 2012 calendar year estimate of 71.4% ORVR penetration in the national gasoline fueled motor vehicle fleet.

somewhat greater reduction is expected to be achieved. These additional reductions will further mitigate any temporary declining emissions increases, which are already *de minimis,* resulting from removal of Stage II equipment.

Finally, with respect to the graphs and calculations submitted as part of ARID Technologies' comments, we note that, in some cases, differing assumptions were used by the commenter as compared to those used by Rhode Island. For example, the ARID Technologies calculations assume a Stage II vapor recovery efficiency of 75 percent, whereas Rhode Island used a more conservative figure of 70 percent. EPA's August 7, 2012 Guidance states that Stage II control efficiencies are typically in the range of 60–75 percent. Assuming a higher Stage II efficiency would result in a higher estimate of foregone emission reductions. However, in some cases, the assumptions and/or the basis or references for the assumptions used in the commenter's calculations are not stated. Therefore, we are not, at this time, assessing the appropriateness of each of the individual calculations included in the ARID Technologies documents but instead note that the commenter's summary result of 400,000 lbs (or 200 tons) of hydrocarbon emissions in 2013 (see slide 8 of the commenter's presentation), although higher than the Rhode Island estimate of 69 tons referenced above, is still only about 0.9 percent, *i.e.,* less than one percent, of the 22,248 tons of total annual anthropogenic VOC emissions in Rhode Island (see EPA's 2011 National Emissions Inventory database Version 1 at *www.epa.gov/ttn/chief/net/2011inventory.html*). As also noted above, these foregone emission reductions are highest in 2013 and diminish rapidly over time. Finally, the commenter does not assert or demonstrate that the foregone emissions reductions based on his assumptions would exceed the *de minimis* criteria discussed in EPA's August 7, 2012 Guidance.

III. Final Action

EPA is approving Rhode Island's December 13, 2013 SIP revision. Specifically, EPA is approving the amended Rhode Island Air Pollution Control Regulation No. 11, ''Petroleum Liquids Marketing and Storage,'' and incorporating it into the Rhode Island SIP. EPA is approving this SIP revision because it meets all applicable requirements of the Clean Air Act and EPA guidance, and it will not interfere with any applicable requirement concerning National Ambient Air Quality Standards attainment and reasonable further progress or with any other applicable requirement of the Clean Air Act.

Rhode Island's December 13, 2013 SIP revision satisfies the ''comparable measures'' requirement of CAA section 184(b)(2), because as stated in EPA's August 7, 2012 Guidance, ''the comparable measures requirement is satisfied if phasing out a Stage II control program in a particular area is estimated to have no, or a *de minimis,* incremental loss of area-wide emissions control.'' As noted in the NPR, Rhode Island's SIP revision met *de minimis* criteria outlined in EPA's August 7, 2012 Guidance. In addition, since emissions are *de minimis,* the anti-back sliding requirements of CAA section 110(l) have also been satisfied.

IV. Incorporation by Reference

In this rule, the EPA is finalizing regulatory text that includes incorporation by reference. In accordance with requirements of 1 CFR 51.5, the EPA is finalizing the incorporation by reference Rhode Island's revised Air Pollution Control Regulation No. 11 described in the amendments to 40 CFR part 52 set forth below. The EPA has made, and will continue to make, these documents generally available electronically through *www.regulations.gov* and/or in hard copy at the appropriate EPA office (see the **ADDRESSES** section of this preamble for more information).

V. Statutory and Executive Order Reviews

Under the Clean Air Act, the Administrator is required to approve a SIP submission that complies with the provisions of the Act and applicable Federal regulations. 42 U.S.C. 7410(k); 40 CFR 52.02(a). Thus, in reviewing SIP submissions, EPA's role is to approve state choices, provided that they meet the criteria of the Clean Air Act. Accordingly, this action merely approves state law as meeting Federal requirements and does not impose additional requirements beyond those imposed by state law. For that reason, this action:

- Is not a significant regulatory action subject to review by the Office of Management and Budget under Executive Orders 12866 (58 FR 51735, October 4, 1993) and 13563 (76 FR 3821, January 21, 2011);
- does not impose an information collection burden under the provisions of the Paperwork Reduction Act (44 U.S.C. 3501 *et seq.*);
- is certified as not having a significant economic impact on a substantial number of small entities under the Regulatory Flexibility Act (5 U.S.C. 601 *et seq.*);
- does not contain any unfunded mandate or significantly or uniquely affect small governments, as described in the Unfunded Mandates Reform Act of 1995 (Pub. L. 104–4);
- does not have Federalism implications as specified in Executive Order 13132 (64 FR 43255, August 10, 1999);
- is not an economically significant regulatory action based on health or safety risks subject to Executive Order 13045 (62 FR 19885, April 23, 1997);
- is not a significant regulatory action subject to Executive Order 13211 (66 FR 28355, May 22, 2001);
- is not subject to requirements of Section 12(d) of the National Technology Transfer and Advancement Act of 1995 (15 U.S.C. 272 note) because application of those requirements would be inconsistent with the Clean Air Act; and
- does not provide EPA with the discretionary authority to address, as appropriate, disproportionate human health or environmental effects, using practicable and legally permissible methods, under Executive Order 12898 (59 FR 7629, February 16, 1994).

In addition, the SIP is not approved to apply on any Indian reservation land or in any other area where EPA or an Indian tribe has demonstrated that a tribe has jurisdiction. In those areas of Indian country, the rule does not have tribal implications and will not impose substantial direct costs on tribal governments or preempt tribal law as specified by Executive Order 13175 (65 FR 67249, November 9, 2000).

The Congressional Review Act, 5 U.S.C. 801 *et seq.,* as added by the Small Business Regulatory Enforcement Fairness Act of 1996, generally provides that before a rule may take effect, the agency promulgating the rule must submit a rule report, which includes a copy of the rule, to each House of the Congress and to the Comptroller General of the United States. EPA will submit a report containing this action and other required information to the U.S. Senate, the U.S. House of Representatives, and the Comptroller General of the United States prior to publication of the rule in the **Federal Register**. A major rule cannot take effect until 60 days after it is published in the **Federal Register**. This action is not a ''major rule'' as defined by 5 U.S.C. 804(2).

Under section 307(b)(1) of the Clean Air Act, petitions for judicial review of this action must be filed in the United

States Court of Appeals for the appropriate circuit by August 10, 2015. Filing a petition for reconsideration by the Administrator of this final rule does not affect the finality of this action for the purposes of judicial review nor does it extend the time within which a petition for judicial review may be filed, and shall not postpone the effectiveness of such rule or action. This action may not be challenged later in proceedings to enforce its requirements. (See section 307(b)(2).)

List of Subjects in 40 CFR Part 52

Environmental protection, Air pollution control, Carbon monoxide, Incorporation by reference, Intergovernmental relations, Lead, Nitrogen dioxide, Ozone, Particulate matter, Reporting and recordkeeping requirements, Sulfur oxides, Volatile organic compounds.

Dated: May 26, 2015.

H. Curtis Spalding,

Regional Administrator, EPA New England.

Part 52 of chapter I, title 40 of the Code of Federal Regulations is amended as follows:

PART 52—APPROVAL AND PROMULGATION OF IMPLEMENTATION PLANS

■ 1. The authority citation for part 52 continues to read as follows:

Authority: 42 U.S.C. 7401 *et seq.*

Subpart OO—Rhode Island

■ 2. In § 52.2070 the table in paragraph (c) is amended by revising the entry for state citation ''Air Pollution Control Regulation 11'' to read as follows:

§ 52.2070 Identification of plan.

* * * * *

(c) EPA Approved regulations.

EPA-APPROVED RHODE ISLAND REGULATIONS

State citation	Title/subject	State effective date	EPA approval date	Explanations
*	*	*	*	*
Air Pollution Control Regulation 11.	Petroleum liquids marketing and storage.	12/25/2013	6/9/2015 [Insert **Federal Register** citation].	Includes decommissioning of Stage II vapor recovery systems.
*	*	*	*	*

* * * * *

[FR Doc. 2015–13944 Filed 6–8–15; 8:45 am]

BILLING CODE 6560–50–P

ENVIRONMENTAL PROTECTION AGENCY

40 CFR Part 52

[EPA–R03–OAR–2015–0089; FRL–9928–65–Region 3]

Approval and Promulgation of Air Quality Implementation Plans; Maryland; Biomass Fuel-Burning Equipment Standards

AGENCY: Environmental Protection Agency (EPA).

ACTION: Final rule.

SUMMARY: The Environmental Protection Agency (EPA) is approving a State Implementation Plan (SIP) revision submitted by the State of Maryland. This revision pertains to a new regulation for biomass fuel-burning equipment and related amendments to existing regulations. This action is being taken under the Clean Air Act (CAA).

DATES: This final rule is effective on July 9, 2015.

ADDRESSES: EPA has established a docket for this action under Docket ID Number EPA–R03–OAR–2015–0089. All documents in the docket are listed in the *www.regulations.gov* Web site. Although listed in the electronic docket, some information is not publicly available, *i.e.,* confidential business information (CBI) or other information whose disclosure is restricted by statute. Certain other material, such as copyrighted material, is not placed on the Internet and will be publicly available only in hard copy form. Publicly available docket materials are available either electronically through *www.regulations.gov* or in hard copy for public inspection during normal business hours at the Air Protection Division, U.S. Environmental Protection Agency, Region III, 1650 Arch Street, Philadelphia, Pennsylvania 19103. Copies of the State submittal are available at the Maryland Department of the Environment, 1800 Washington Boulevard, Suite 705, Baltimore, Maryland 21230.

FOR FURTHER INFORMATION CONTACT: Irene Shandruk, (215) 814–2166, or by email at *shandruk.irene@epa.gov.*

SUPPLEMENTARY INFORMATION:

I. Background

Biomass materials, which include wood residue and wood products, animal manure (including litter and other bedding materials), vegetative agricultural materials as well as silvicultural materials, can be used as fuel burned to provide heat and power. New technologies and environmental initiatives have recently increased the use of biomass material for combustion in the State of Maryland. Therefore, the Maryland Department of the Environment (MDE) has established emission standards for the combustion of biomass fuel by developing a new Code of Maryland (COMAR) regulation, COMAR 26.11.09.12—''Standards for Biomass Fuel-Burning Equipment Greater Than 350,000 British Thermal Units (Btu)/Hour (hr) Heat Input.'' The typical type of equipment that is regulated under this new regulation is a boiler, however, it also applies to process heaters and other applications. On March 25, 2015 (80 FR 15709), EPA published a notice of proposed rulemaking (NPR) for the State of Maryland proposing approval of provisions for biomass fuel-burning equipment.

II. Summary of SIP Revision

On January 12, 2015, MDE submitted to EPA a SIP revision concerning new biomass fuel-burning provisions in COMAR 26.11.09.12 and revised provisions in COMAR 26.11.09.10 for inclusion in the Maryland SIP. The SIP submittal also includes revisions to COMAR 26.11.09.01 (February 22, 2011, 76 FR 9650), .04 (November 3, 1992, 57 FR 49651), .06 (July 6, 2005, 70 FR 38774), .07 (November 3, 1992, 57 FR 49651), and .09 (May 1, 2003, 68 FR

23206), which were previously included in the Maryland SIP. The new regulation, COMAR 26.11.09.12, Standards for Biomass Fuel-Burning Equipment Equal to or Greater Than 350,000 Btu/hr, establishes particulate matter (PM) and nitrogen oxide (NO_X) emission limits (see Table 1) and requirements (such as compliance and record keeping and reporting) for biomass fuel-burning equipment. According to MDE, small biomass boilers will need to install PM emission controls; however the NO_X emission rates for biomass fuel-burning equipment can be achieved through efficient system design and do not require add-on pollution controls. MDE also asserted that new biomass fuel-burning equipment would be subject to standards based on federal maximum achievable control technology (MACT), generally available control technology (GACT), and best available control technology (BACT) analysis. Other specific requirements and the rationale for EPA's proposed action are explained in the NPR and the Technical Support Document (TSD) with Docket ID number EPA–R03–OAR–2015–0089 and will not be restated here. No public comments were received on the NPR.

TABLE 1—EMISSION STANDARDS FOR BIOMASS FUEL-BURNING EQUIPMENT

Heat input capacity (mmBtu/hr)	PM (pounds/mmBtu)	NO_X (pounds/mmBtu)
≥10	0.03–0.07	0.25–0.30
>1.5 and <10	0.1–0.23	0.30
>0.35 and ≤1.5	0.1–0.35	0.30

III. Final Action

EPA is approving a revision to the Maryland SIP pertaining to provisions for biomass fuel-burning equipment in accordance with CAA section 110. EPA's review of this material indicates that MDE's regulations will result in reductions in PM and NO_X, helping Maryland to attain and maintain the National Ambient Air Quality Standards (NAAQS) for ozone and PM.

IV. Incorporation by Reference

In this rulemaking action, the EPA is finalizing regulatory text that includes incorporation by reference. In accordance with requirements of 1 CFR 51.5, the EPA is finalizing the incorporation by reference of the Maryland rules regarding the definitions and requirements for biomass fuel-burning equipment in COMAR 26.11.09.01, .04, .06, .07, .09, .10, and .12. The EPA has made, and will continue to make, these documents generally available electronically through *www.regulations.gov* and/or in hard copy at the EPA Region III office (see the **ADDRESSES** section of this preamble for more information).

V. Statutory and Executive Order Reviews

A. General Requirements

Under the CAA, the Administrator is required to approve a SIP submission that complies with the provisions of the CAA and applicable Federal regulations. 42 U.S.C. 7410(k); 40 CFR 52.02(a). Thus, in reviewing SIP submissions, EPA's role is to approve state choices, provided that they meet the criteria of the CAA. Accordingly, this action merely approves state law as meeting Federal requirements and does not impose additional requirements beyond those imposed by state law. For that reason, this action:

- Is not a ''significant regulatory action'' subject to review by the Office of Management and Budget under Executive Order 12866 (58 FR 51735, October 4, 1993);
- does not impose an information collection burden under the provisions of the Paperwork Reduction Act (44 U.S.C. 3501 *et seq.*);
- is certified as not having a significant economic impact on a substantial number of small entities under the Regulatory Flexibility Act (5 U.S.C. 601 *et seq.*);
- does not contain any unfunded mandate or significantly or uniquely affect small governments, as described in the Unfunded Mandates Reform Act of 1995 (Pub. L. 104–4);
- does not have Federalism implications as specified in Executive Order 13132 (64 FR 43255, August 10, 1999);
- is not an economically significant regulatory action based on health or safety risks subject to Executive Order 13045 (62 FR 19885, April 23, 1997);
- is not a significant regulatory action subject to Executive Order 13211 (66 FR 28355, May 22, 2001);
- is not subject to requirements of Section 12(d) of the National Technology Transfer and Advancement Act of 1995 (15 U.S.C. 272 note) because application of those requirements would be inconsistent with the CAA; and
- does not provide EPA with the discretionary authority to address, as appropriate, disproportionate human health or environmental effects, using practicable and legally permissible methods, under Executive Order 12898 (59 FR 7629, February 16, 1994).

In addition, this rule does not have tribal implications as specified by Executive Order 13175 (65 FR 67249, November 9, 2000), because the SIP is not approved to apply in Indian country located in the state, and EPA notes that it will not impose substantial direct costs on tribal governments or preempt tribal law.

B. Submission to Congress and the Comptroller General

The Congressional Review Act, 5 U.S.C. 801 *et seq.,* as added by the Small Business Regulatory Enforcement Fairness Act of 1996, generally provides that before a rule may take effect, the agency promulgating the rule must submit a rule report, which includes a copy of the rule, to each House of the Congress and to the Comptroller General of the United States. EPA will submit a report containing this action and other required information to the U.S. Senate, the U.S. House of Representatives, and the Comptroller General of the United States prior to publication of the rule in the **Federal Register**. A major rule cannot take effect until 60 days after it is published in the **Federal Register**. This action is not a ''major rule'' as defined by 5 U.S.C. 804(2).

C. Petitions for Judicial Review

Under section 307(b)(1) of the CAA, petitions for judicial review of this action must be filed in the United States Court of Appeals for the appropriate circuit by August 10, 2015. Filing a petition for reconsideration by the Administrator of this final rule does not affect the finality of this action for the purposes of judicial review nor does it extend the time within which a petition for judicial review may be filed, and shall not postpone the effectiveness of such rule or action.

This action pertaining to biomass fuel-burning equipment may not be

challenged later in proceedings to enforce its requirements. (See section 307(b)(2).)

List of Subjects in 40 CFR Part 52

Environmental protection, Air pollution control, Incorporation by reference, Intergovernmental relations, Nitrogen dioxide, Ozone, Particulate matter, Reporting and recordkeeping requirements.

Dated: May 20, 2015.

William C. Early,

Acting Regional Administrator, Region III.

40 CFR part 52 is amended as follows:

PART 52—APPROVAL AND PROMULGATION OF IMPLEMENTATION PLANS

■ 1. The authority citation for part 52 continues to read as follows:

Authority: 42 U.S.C. 7401 *et seq.*

Subpart V—Maryland

■ 2. In § 52.1070, the table in paragraph (c) is amended by revising the entries for COMAR 26.11.09.01, 26.11.09.04, 26.11.09.06, 26.11.09.07, and 26.11.09.09, and adding entries for COMAR 26.11.09.10 and 26.11.09.12 in numerical order to read as follows:

§ 52.1070 Identification of plan.

* * * * *

(c) * * *

EPA-APPROVED REGULATIONS, TECHNICAL MEMORANDA, AND STATUTES IN THE MARYLAND SIP

Code of Maryland Administrative Regulations (COMAR) citation	Title/Subject	State effective date	EPA approval date	Additional explanation/ citation at 40 CFR 52.1100
*	*	*	*	*
26.11.09.01	Definitions	04/28/14	6/9/15 [*Insert* ***Federal Register*** *citation*].	Definition of ''biomass'' is added.
*	*	*	*	*
26.11.09.04	Prohibition of Certain New Fuel Burning Equipment.	04/28/14	6/9/15 [*Insert* ***Federal Register*** *citation*].	Revised (C)(1).
*	*	*	*	*
26.11.09.06	Control of Particulate Matter	04/28/14	6/9/15 [*Insert* ***Federal Register*** *citation*].	Revised (D)(1) and (D)(2).
26.11.09.07	Control of Sulfur Oxides from Fuel Burning Equipment.	04/28/14	6/9/15 [*Insert* ***Federal Register*** *citation*].	Revised (B)(5).
*	*	*	*	*
26.11.09.09	Tables and Diagrams	4/28/14	6/9/15 [*Insert* ***Federal Register*** *citation*].	Amended incorrect reference.
26.11.09.10	Requirements to Burn Used Oil and Waste Combustible Fluid as Fuel.	04/28/14	6/9/15 [*Insert* ***Federal Register*** *citation*].	New regulation.
26.11.09.12	Standards for Biomass Fuel-Burning Equipment Equal to or Greater Than 350,000 Btu/hr.	04/28/14	6/9/15 [*Insert* ***Federal Register*** *citation*].	New regulation.
*	*	*	*	*

* * * * *

[FR Doc. 2015–13425 Filed 6–8–15; 8:45 am]

BILLING CODE 6560–50–P

ENVIRONMENTAL PROTECTION AGENCY

40 CFR Parts 52, 62, and 81

[EPA–R03–OAR–2015–0311]; FRL–9928–68–Region 3]

Approval and Promulgation of Air Quality Implementation Plans; Pennsylvania; 2011 Lead Base Year Emissions Inventory

AGENCY: Environmental Protection Agency (EPA).

ACTION: Direct final rule.

SUMMARY: The Environmental Protection Agency (EPA) is taking direct final action to approve a revision to the Commonwealth of Pennsylvania (Pennsylvania) State Implementation Plan (SIP). EPA is proposing to approve the 2011 base year emissions inventory SIP revision submittal for the 2008 lead National Ambient Air Quality Standards (NAAQS). The base year emissions inventory SIP revision was submitted by the Pennsylvania Department of Environmental Protection (PADEP) on February 9, 2015 to meet the requirements of the Clean Air Act (CAA) for the Lyons 2008 lead NAAQS nonattainment area (hereafter referred to as the ''Lyons Area'' or ''Area''). EPA is approving this revision to the Pennsylvania SIP in accordance with the requirements of the CAA.

DATES: This rule is effective on August 10, 2015 without further notice, unless EPA receives adverse written comment by July 9, 2015. If EPA receives such comments, it will publish a timely withdrawal of the direct final rule in the **Federal Register** and inform the public that the rule will not take effect.

ADDRESSES: Submit your comments, identified by Docket ID Number EPA–R03–OAR–2015–0311 by one of the following methods:

A. *www.regulations.gov.* Follow the on-line instructions for submitting comments.

B. Email: *fernandez.cristina@epa.gov.*

C. Mail: EPA–R03–OAR–2015–0311, Cristina Fernandez, Associate Director, Office of Air Program Planning, Mailcode 3AP30, U.S. Environmental Protection Agency, Region III, 1650 Arch Street, Philadelphia, Pennsylvania 19103.

D. Hand Delivery: At the previously-listed EPA Region III address. Such

deliveries are only accepted during the Docket's normal hours of operation, and special arrangements should be made for deliveries of boxed information.

Instructions: Direct your comments to Docket ID No. EPA–R03–OAR–2015–0311. EPA's policy is that all comments received will be included in the public docket without change, and may be made available online at *www.regulations.gov,* including any personal information provided, unless the comment includes information claimed to be Confidential Business Information (CBI) or other information whose disclosure is restricted by statute. Do not submit information that you consider to be CBI, or otherwise protected, through *www.regulations.gov* or email. The *www.regulations.gov* Web site is an ''anonymous access'' system, which means EPA will not know your identity or contact information unless you provide it in the body of your comment. If you send an email comment directly to EPA without going through *www.regulations.gov,* your email address will be automatically captured and included as part of the comment that is placed in the public docket and made available on the Internet. If you submit an electronic comment, EPA recommends that you include your name and other contact information in the body of your comment and with any disk or CD–ROM you submit. If EPA cannot read your comment due to technical difficulties and cannot contact you for clarification, EPA may not be able to consider your comment. Electronic files should avoid the use of special characters, any form of encryption, and be free of any defects or viruses.

Docket: All documents in the electronic docket are listed in the *www.regulations.gov* index. Although listed in the index, some information is not publicly available, *i.e.,* CBI or other information whose disclosure is restricted by statute. Certain other material, such as copyrighted material, is not placed on the Internet and will be publicly available only in hard copy form. Publicly available docket materials are available either electronically in *www.regulations.gov* or in hard copy during normal business hours at the Air Protection Division, U.S. Environmental Protection Agency, Region III, 1650 Arch Street, Philadelphia, Pennsylvania 19103. Copies of the SIP submittal are available at the Pennsylvania Department of Environmental Protection, Bureau of Air Quality Control, P.O. Box 8468, 400 Market Street, Harrisburg, Pennsylvania 17105.

FOR FURTHER INFORMATION CONTACT: Ellen Schmitt, (215) 814–5787, or by email at *schmitt.ellen@epa.gov.*

SUPPLEMENTARY INFORMATION:

I. Background

On November 12, 2008 (73 FR 66964), EPA revised the lead NAAQS, lowering the level from 1.5 micrograms per cubic meter (μg/m^3) to 0.15 μg/m^3 calculated over a three-month rolling average. EPA established the NAAQS based on significant evidence and numerous health studies demonstrating that serious health effects are associated with exposures to lead emissions.

Following promulgation of a new or revised NAAQS, EPA is required by the CAA to designate areas throughout the United States as attaining or not attaining the NAAQS; this designation process is described in section 107(d)(1) of the CAA. On November 22, 2010 (75 FR 71033), EPA promulgated initial air quality designations for the 2008 lead NAAQS, which became effective on December 31, 2010, based on air quality monitoring data for calendar years 2007–2009, where there was sufficient data to support a nonattainment designation. Designations for all remaining areas were completed on November 22, 2011, based on air quality monitoring data for calendar years 2008–2010. Effective December 31, 2010, the Lyons Area was designated as nonattainment for the 2008 lead NAAQS. This designation triggered a requirement for Pennsylvania to submit a SIP revision with a plan for how the Lyons Area would attain the 2008 lead NAAQS as expeditiously as practicable, but no later than December 31, 2015.

Designation of an area as nonattainment starts the process for a state to develop and submit to EPA a SIP revision under title I, part D of the CAA. This SIP revision must include, among other elements, a demonstration of how the NAAQS will be attained in the nonattainment area as expeditiously as practicable, but no later than the date required by the CAA, together with a base year emissions inventory, reasonably available control measures (RACM), a reasonable further progress (RFP) plan, and contingency measures for failure to meet RFP and attainment deadlines. Under CAA section 172(b), a state has up to three years after an area's designation as nonattainment to submit its SIP revision to EPA.

On December 29, 2014 (79 FR 77911), EPA took final action to determine that the Lyons Area (comprised of Kutztown Borough, Lyon Borough, Maxatawny Township, and Richmond Township) has ambient air quality monitoring data that shows the Area meets the 2008 lead NAAQS. This clean data determination was based upon quality assured, quality controlled and certified ambient air monitoring data that shows the Area has monitored attainment of the 2008 lead NAAQS based on the calendar years 2009–2011 data. Pursuant to EPA's Clean Data Policy, once EPA finalizes a clean data determination, the requirements for the Area to submit an attainment demonstration, RACM, a RFP plan, and contingency measures for failure to meet RFP and attainment deadlines are suspended for so long as the Area continues to attain the 2008 lead NAAQS.

Since 1995, EPA has applied its interpretation under the Clean Data Policy in many rulemakings, suspending certain attainment-related planning requirements for individual areas, based on a determination of attainment. However, EPA notes that a final determination of attainment does not suspend requirements not related to attaining the NAAQS, such as the emissions inventory requirement found in CAA section 172(c)(3), which requires submission and approval of an inventory of actual emissions of lead from all sources in the nonattainment area (*i.e.,* base year emissions inventory).

On February 9, 2015, Pennsylvania submitted a formal revision to its SIP that consists of the lead base year emissions inventory for the Lyons Area for the 2008 lead NAAQS.

II. Emissions Inventory Requirements

States are required under section 172(c)(3) of the CAA to develop comprehensive, accurate and current emissions inventories of all sources of the relevant pollutant or pollutants in the nonattainment area. These inventories provide a detailed accounting of all emissions and emission sources by precursor or pollutant. In the November 12, 2008 lead NAAQS rulemaking, EPA finalized the guidance related to the emissions inventories requirements. The current regulations are located at 40 CFR 51.117(e), and include, but are not limited to, the following requirements:

- States must develop and periodically update a comprehensive, accurate, current inventory of actual emissions from all sources affecting ambient lead concentrations;
- The SIP inventory must be approved by EPA as a SIP element and is subject to public hearing requirements; and
- The point source inventory upon which the summary of the baseline for lead emissions inventory is based must

contain all sources that emit 0.5 or more tons of lead per year.

For the base-year inventory of actual lead emissions, EPA recommends using either 2010 or 2011 as the base year for the contingency measure calculations, but does provide flexibility for using other inventory years if states can show another year is more appropriate.[1] For lead SIPs, the CAA requires that all sources of lead emissions in the nonattainment area must be submitted with the base-year inventory. In today's action, EPA is approving the base year emissions inventory SIP revision submitted by Pennsylvania on February 9, 2015, (hereinafter also referred to as ''Pennsylvania's submission'') as required by section 172(c)(3).

III. EPA Analysis of the Lyons 2011 Lead Base Year Emissions Inventory

EPA guidance for emissions inventory development provides that actual emissions should be used for purposes of the base year inventory.[2] On February 9, 2015, Pennsylvania submitted to EPA the 2011 base year emissions inventory for the lead point sources located within the Lyons Area. The Lyons Area has the following point sources of lead emissions: East Penn Manufacturing Company's Richmond Township Facility; East Penn Manufacturing Company's Kutztown Facility; and McConway & Torley Kutztown Foundry. PADEP requires larger emitting facilities to report production figures and emission calculations annually. Throughput data are multiplied by emission factors based on source classification codes (SCC) to develop emission estimates.

PADEP submitted EPA's 2011 National Emissions Inventory (NEI) v2 data for nonpoint source lead emissions. The nonpoint source values for the Lyons Area were calculated using Berks County data apportioned by population, of which 4.1 percent (%) is included in the Lyons Area. EPA reviewed the results, procedures, and methodologies for Pennsylvania's submission and found them to be reasonable for calculating the lead base year inventory for CAA section 172(c)(3) and in accordance with 40 CFR 51.117(e). A more detailed description of the SIP submittal and EPA's evaluation is included in a Technical Support Document (TSD) prepared in support of this rulemaking action. A copy of the TSD is available, upon request, from the EPA Regional Office listed in the **ADDRESSES** section of this document or is also available electronically within the Docket for this rulemaking action.

IV. Final Action

EPA is approving Pennsylvania's submission consisting of the base year emissions inventory for the Lyons Area for the 2008 lead NAAQS. EPA is publishing this rule without prior proposal because EPA views this as a noncontroversial amendment and anticipates no adverse comment. However, in the ''Proposed Rules'' section of today's **Federal Register**, EPA is publishing a separate document that will serve as the proposal to approve the SIP revision if adverse comments are filed. This rule will be effective on August 10, 2015 without further notice unless EPA receives adverse comment by July 9, 2015. If EPA receives adverse comment, EPA will publish a timely withdrawal in the **Federal Register** informing the public that the rule will not take effect. EPA will address all public comments in a subsequent final rule based on the proposed rule. EPA will not institute a second comment period on this action. Any parties interested in commenting must do so at this time.

V. Statutory and Executive Order Reviews

A. General Requirements

Under the CAA, the Administrator is required to approve a SIP submission that complies with the provisions of the CAA and applicable Federal regulations. 42 U.S.C. 7410(k); 40 CFR 52.02(a). Thus, in reviewing SIP submissions, EPA's role is to approve state choices, provided that they meet the criteria of the CAA. Accordingly, this action merely approves state law as meeting Federal requirements and does not impose additional requirements beyond those imposed by state law. For that reason, this action:

- Is not a ''significant regulatory action'' subject to review by the Office of Management and Budget under Executive Order 12866 (58 FR 51735, October 4, 1993);
- does not impose an information collection burden under the provisions of the Paperwork Reduction Act (44 U.S.C. 3501 *et seq.*);
- is certified as not having a significant economic impact on a substantial number of small entities under the Regulatory Flexibility Act (5 U.S.C. 601 *et seq.*);
- does not contain any unfunded mandate or significantly or uniquely affect small governments, as described in the Unfunded Mandates Reform Act of 1995 (Pub. L. 104–4);
- does not have Federalism implications as specified in Executive Order 13132 (64 FR 43255, August 10, 1999);
- is not an economically significant regulatory action based on health or safety risks subject to Executive Order 13045 (62 FR 19885, April 23, 1997);
- is not a significant regulatory action subject to Executive Order 13211 (66 FR 28355, May 22, 2001);
- is not subject to requirements of Section 12(d) of the National Technology Transfer and Advancement Act of 1995 (15 U.S.C. 272 note) because application of those requirements would be inconsistent with the CAA; and
- does not provide EPA with the discretionary authority to address, as appropriate, disproportionate human health or environmental effects, using practicable and legally permissible methods, under Executive Order 12898 (59 FR 7629, February 16, 1994).

In addition, this rule does not have tribal implications as specified by Executive Order 13175 (65 FR 67249, November 9, 2000), because the SIP is not approved to apply in Indian country located in the state, and EPA notes that it will not impose substantial direct costs on tribal governments or preempt tribal law.

B. Submission to Congress and the Comptroller General

The Congressional Review Act, 5 U.S.C. 801 *et seq.,* as added by the Small Business Regulatory Enforcement Fairness Act of 1996, generally provides that before a rule may take effect, the agency promulgating the rule must submit a rule report, which includes a copy of the rule, to each House of the Congress and to the Comptroller General of the United States. EPA will submit a report containing this action and other required information to the U.S. Senate, the U.S. House of Representatives, and the Comptroller General of the United States prior to publication of the rule in the **Federal Register**. A major rule cannot take effect until 60 days after it is published in the **Federal Register**. This action is not a ''major rule'' as defined by 5 U.S.C. 804(2).

C. Petitions for Judicial Review

Under section 307(b)(1) of the CAA, petitions for judicial review of this action must be filed in the United States Court of Appeals for the appropriate circuit by August 10, 2015. Filing a petition for reconsideration by the Administrator of this final rule does not affect the finality of this action for the purposes of judicial review nor does it

[1] *See* EPA document titled ''Addendum to the 2008 Lead NAAQS Implementation Questions and Answers'' dated August 10, 2012, which is included in EPA's SIP Toolkit located at *http://www.epa.gov/air/lead/kitmodel.html.*

[2] *Id.*

extend the time within which a petition for judicial review may be filed, and shall not postpone the effectiveness of such rule or action. Parties with objections to this direct final rule are encouraged to file a comment in response to the parallel notice of proposed rulemaking for this action published in the proposed rules section of today's **Federal Register**, rather than file an immediate petition for judicial review of this direct final rule, so that EPA can withdraw this direct final rule and address the comment in the proposed rulemaking action. This action to approve Pennsylvania's base year emissions inventory for the Lyons Area may not be challenged later in proceedings to enforce its requirements. (See section 307(b)(2).)

List of Subjects in 40 CFR Part 52

Environmental protection, Air pollution control, Incorporation by reference, Intergovernmental relations, and Lead.

Dated: May 20, 2015.

William C. Early,

Acting, Regional Administrator, Region III.

40 CFR part 52 is amended as follows:

PART 52—APPROVAL AND PROMULGATION OF IMPLEMENTATION PLANS

■ 1. The authority citation for part 52 continues to read as follows:

Authority: 42 U.S.C. 7401 *et seq.*

Subpart NN—Pennsylvania

■ 2. Section 52.2036 is amended by adding paragraph (v) to read as follows:

§ 52.2036 Base year emissions inventory.

* * * * *

(v) EPA approves as a revision to the Pennsylvania State Implementation Plan the 2011 base year lead emission inventory for the Lyons, Pennsylvania nonattainment area for the 2008 lead NAAQS. This SIP revision was submitted by the Acting Secretary of the Pennsylvania Department of Environmental Protection, on February 9, 2015. This submittal consists of the 2011 base year inventories for all relevant sources in the Lyons, Pennsylvania nonattainment area for the pollutant lead (Pb).

[FR Doc. 2015–13945 Filed 6–8–15; 8:45 am]

BILLING CODE 6560–50–P

DEPARTMENT OF HEALTH AND HUMAN SERVICES

45 CFR Part 170

Acceptance and Approval of Non-Governmental Developed Test Procedures, Test Tools, and Test Data for Use Under the ONC Health IT Certification Program

AGENCY: Office of the National Coordinator for Health Information Technology (ONC), Department of Health and Human Services.

ACTION: Reissuance.

SUMMARY: This document further informs the public of ONC's policy that permits any person or entity to submit test procedures, test tools, and test data for approval and use under the ONC Health IT Certification Program.

DATES: Reissued June 9, 2015.

FOR FURTHER INFORMATION CONTACT: Alicia Morton, Director, ONC Health IT Certification Program, Office of the National Coordinator for Health Information Technology, 202–549–7851.

SUPPLEMENTARY INFORMATION: On January 7, 2011, the Department of Health and Human Services issued a final rule establishing a permanent certification program for the purposes of testing and certifying health information technology (''Establishment of the Permanent Certification Program for Health Information Technology,'' 76 FR 1262) (''Permanent Certification Program final rule''). The permanent certification program was renamed the ''ONC HIT Certification Program'' in a final rule published on September 4, 2012 (77 FR 54163) (''2014 Edition EHR Certification Criteria final rule''). In the proposed rule entitled ''2015 Edition Health Information Technology (Health IT) Certification Criteria, 2015 Edition Base Electronic Health Record (EHR) Definition, and ONC Health IT Certification Program Modifications'' (80 FR 16804, 16806), we propose to further rename the program as the ''ONC *Health IT* Certification Program.''

In the preamble of the Permanent Certification Program final rule, we stated that a *person or entity* may submit a test procedure or test tool (to note, which includes any associated test data) to the National Coordinator for Health Information Technology (the National Coordinator) to be considered for approval and use by NVLAP accredited testing laboratories. ''The submission should identify the developer of the test tool and/or test procedure; specify the certification criterion or criteria that is/are addressed by the test tool and/or test procedure; and explain how the test tool and/or test procedure would evaluate a Complete EHR's, EHR Module's, or if the applicable, and other type of HIT's compliance with the applicable certification criterion or criteria. The submission should also provide information describing the process used to develop the test tool and/or test procedure, including any opportunity for the public to comment on the test tool and/or test procedure and the degree to which public comments were considered.'' (76 FR 1280) We also stated that ''[i]n determining whether to approve a test tool and/or test procedure for purposes of the permanent certification program, the National Coordinator will consider whether it is clearly traceable to a certification criterion or criteria adopted by the Secretary; whether it is sufficiently comprehensive (*i.e.,* assesses all required capabilities) for NVLAP-accredited testing laboratories to use in testing a Complete EHR's, EHR Module's, or other type of HIT's compliance with the certification criterion or criteria adopted by the Secretary; whether an appropriate public comment process was used during the development of the test tool and/or test procedure; and any other relevant factors.'' (76 FR 1280)

During the time in which the ONC Health IT Certification Program has operated, health IT developers have suggested that testing efficiencies could be achieved if the ONC Health IT Certification Program were to leverage operational testing and certification, such as the ePrescribing (eRX) network testing (and certification). As indicated by the previously recited ONC policy, the National Coordinator is open to approving test procedures, test tools, and test data that meet the outlined approval requirements above for an applicable adopted certification criterion or criteria. By way of this document, we strongly encourage persons or entities to submit such test procedures, test tools, and test data to ONC if they believe such procedures, tools, and data could be used to meet ONC's certification criteria and testing approval requirements. We also note that there is no programmatic prohibition on the approval of multiple test procedures, test tools, and test data for a certification criterion or criteria.

Dated: May 21, 2015.

Alicia Morton,

Director, ONC Health IT Certification Program, Office of the National Coordinator for Health Information Technology.

[FR Doc. 2015–13510 Filed 6–8–15; 8:45 am]

BILLING CODE 4150–45–P

DEPARTMENT OF COMMERCE

National Oceanic and Atmospheric Administration

50 CFR Part 622

[Docket No. 140501394–5279–02]

RIN 0648–XD962

Fisheries of the Caribbean, Gulf of Mexico, and South Atlantic; 2015 Recreational Accountability Measure and Closure for Blueline Tilefish in the South Atlantic Region

AGENCY: National Marine Fisheries Service (NMFS), National Oceanic and Atmospheric Administration (NOAA), Commerce.

ACTION: Temporary rule; closure.

SUMMARY: NMFS implements accountability measures (AMs) for recreational blueline tilefish in the exclusive economic zone (EEZ) of the South Atlantic. The NMFS Science and Research Director estimates that recreational landings for blueline tilefish have reached the recreational annual catch limit (ACL). Therefore, NMFS is closing the recreational sector for blueline tilefish in the South Atlantic EEZ at 12:01 a.m., local time, June 10, 2015, and it will remain closed until the 2016 recreational fishing season begins on May 1, 2016. This closure is necessary to protect the blueline tilefish resource.

DATES: This rule is effective 12:01 a.m., local time, June 10, 2015, until 12:01 a.m., local time, January 1, 2016.

FOR FURTHER INFORMATION CONTACT: Catherine Hayslip, NMFS Southeast Region, telephone: 727–824–5305, email: *catherine.hayslip@noaa.gov*.

SUPPLEMENTARY INFORMATION: The snapper-grouper fishery of the South Atlantic includes blueline tilefish and is managed under the Fishery Management Plan for the Snapper-Grouper Fishery of the South Atlantic Region (FMP). The South Atlantic Fishery Management Council and NMFS prepared the FMP, and the FMP is implemented under the authority of the Magnuson-Stevens Fishery Conservation and Management Act (Magnuson-Stevens Act) by regulations at 50 CFR part 622.

NMFS implemented management measures for blueline tilefish in Amendment 32 to the FMP for the Snapper-Grouper Fishery of the South Atlantic Region (Amendment 32) (80 FR 16583, March 30, 2015). Amendment 32 contains management measures that end overfishing of blueline tilefish in the South Atlantic.

NMFS is required to close the recreational sector for blueline tilefish when the recreational ACL is reached, or is projected to be reached, by filing a notification to that effect with the Office of the Federal Register, as specified in 50 CFR 622.193(z)(2)(i). The recreational ACL for blueline tilefish in 2015 is 17,791 lb (8,070 kg), round weight. NMFS has determined that the recreational ACL for South Atlantic blueline tilefish has been reached. Accordingly, the recreational sector for South Atlantic blueline tilefish is closed effective June 10, 2015, until 12:01 a.m., local time, January 1, 2016, the start of the next fishing year. However, as described in 50 CFR 622.183(b)(7), the recreational sector for blueline tilefish is also closed from January 1 through April 30, and September 1 through December 31, each year. Therefore, the recreational sector may not harvest blueline tilefish until May 1, 2016.

During the closure, the bag and possession limits for blueline tilefish in or from the South Atlantic EEZ are zero. Additionally, NMFS closed the commercial sector for blueline tilefish effective April 7, 2015, upon reaching the commercial ACL (80 FR 18551, April 7, 2015). Therefore, on June 10, 2015, no commercial or recreational harvest of blueline tilefish from the South Atlantic EEZ is permitted for the remainder of 2015. The commercial sector for blueline tilefish reopens on January 1, 2016.

Classification

The Regional Administrator, Southeast Region, NMFS, has determined this temporary rule is necessary for the conservation and management of blueline tilefish and the South Atlantic snapper-grouper fishery and is consistent with the Magnuson-Stevens Act and other applicable laws.

This action is taken under 50 CFR 622.193(z)(2)(i) and is exempt from review under Executive Order 12866.

These measures are exempt from the procedures of the Regulatory Flexibility Act because the temporary rule is issued without opportunity for prior notice and comment.

This action responds to the best scientific information available. The Assistant Administrator for Fisheries, NOAA (AA), finds that the need to immediately implement this action to close the recreational sector for blueline tilefish constitutes good cause to waive the requirements to provide prior notice and opportunity for public comment pursuant to the authority set forth in 5 U.S.C. 553(b)(B), as such prior notice and opportunity for public comment are unnecessary and contrary to the public interest. Such procedures are unnecessary because the regulations at 50 CFR 622.193(z)(2)(i) have already been subject to notice and comment, and all that remains is to notify the public of the closure. Such procedures are contrary to the public interest because there is a need to immediately implement this action to protect blueline tilefish, since the capacity of the recreational sector allows for rapid harvest of the recreational ACL. Prior notice and opportunity for public comment would require time and would potentially result in a harvest well in excess of the established recreational ACL.

For the aforementioned reasons, the AA also finds good cause to waive the 30-day delay in the effectiveness of this action under 5 U.S.C. 553(d)(3).

Authority: 16 U.S.C. 1801 *et seq.*

Dated: June 4, 2015.

Emily H. Menashes,

Acting Director, Office of Sustainable Fisheries, National Marine Fisheries Service.

[FR Doc. 2015–14048 Filed 6–5–15; 8:45 am]

BILLING CODE 3510–22–P

DEPARTMENT OF COMMERCE

National Oceanic and Atmospheric Administration

50 CFR Part 635

[Docket No. 120328229–4949–02]

RIN 0648–XD973

Atlantic Highly Migratory Species; Atlantic Bluefin Tuna Fisheries

AGENCY: National Marine Fisheries Service (NMFS), National Oceanic and Atmospheric Administration (NOAA), Commerce.

ACTION: Temporary rule; closure of Angling category southern area trophy fishery.

SUMMARY: NMFS closes the southern area Angling category fishery for large medium and giant (''trophy'' (*i.e.,* measuring 73 inches curved fork length or greater)) Atlantic bluefin tuna (BFT). This action is being taken to prevent any further overharvest of the Angling category southern area trophy BFT subquota.

DATES: Effective June 7, 2015 through December 31, 2015.

FOR FURTHER INFORMATION CONTACT: Sarah McLaughlin or Brad McHale, 978–281–9260.

SUPPLEMENTARY INFORMATION: Regulations implemented under the authority of the Atlantic Tunas

Convention Act (ATCA; 16 U.S.C. 971 *et seq.*) and the Magnuson-Stevens Fishery Conservation and Management Act (Magnuson-Stevens Act; 16 U.S.C. 1801 *et seq.*) governing the harvest of BFT by persons and vessels subject to U.S. jurisdiction are found at 50 CFR part 635. Section 635.27 subdivides the U.S. BFT quota recommended by the International Commission for the Conservation of Atlantic Tunas (ICCAT) among the various domestic fishing categories, per the allocations established in the 2006 Consolidated Atlantic Highly Migratory Species Fishery Management Plan (2006 Consolidated HMS FMP) (71 FR 58058, October 2, 2006), as amended by Amendment 7 to the 2006 Consolidated HMS FMP (Amendment 7) (79 FR 71510, December 2, 2014), and in accordance with implementing regulations.

NMFS is required, under § 635.28(a)(1), to file a closure notice with the Office of the Federal Register for publication when a BFT quota is reached or is projected to be reached. On and after the effective date and time of such notification, for the remainder of the fishing year or for a specified period as indicated in the notification, retaining, possessing, or landing BFT under that quota category is prohibited until the opening of the subsequent quota period or until such date as specified in the notice.

Angling Category Large Medium and Giant Southern ''Trophy'' Fishery Closure

The 2015 BFT fishing year, which is managed on a calendar-year basis and subject to an annual calendar-year quota, began January 1, 2015. The Angling category season opened January 1, 2015, and continues through December 31, 2015. The currently codified Angling category quota is 168.6 mt, of which 3.9 mt is allocated for the harvest of large medium and giant (trophy) BFT from the regulatory area by vessels fishing under the Angling category quota, with 1.3 mt allocated for each of the following areas: North of 39°18′ N. lat. (off Great Egg Inlet, NJ); south of 39°18′ N. lat. and outside the Gulf of Mexico; and in the Gulf of Mexico. Trophy BFT measure 73 inches (185 cm) curved fork length or greater.

Reported landings from the NMFS Automated Catch Reporting System and the North Carolina Tagging Program total approximately 2 mt and NMFS has determined that the codified Angling category southern area trophy BFT subquota has been reached and that a closure of the southern area trophy BFT fishery is warranted at this time. Therefore, retaining, possessing, or landing large medium or giant BFT south of 39°18′ N. lat. and outside the Gulf of Mexico by persons aboard vessels permitted in the HMS Angling category and the HMS Charter/Headboat category must cease at 11:30 p.m. local time on June 7, 2015. This closure will remain effective through December 31, 2015. This action is intended to prevent any further overharvest of the Angling category southern area trophy BFT subquota, and is taken consistent with the regulations at § 635.28(a)(1).

NMFS has considered the fact that it is in the process of proposing a rule that would implement and give domestic effect to the 2014 ICCAT recommendation on western Atlantic BFT management, which increased the U.S. BFT quota for 2015 and 2016 by 14 percent from the 2014 level. The domestic subquotas to be proposed in that action would result from application of the allocation process established in Amendment 7 to the 2006 Consolidated HMS FMP to the increased U.S. quota, and would include an increase in the southern trophy BFT quota from the currently codified 1.3 mt to a total of 1.5 mt. However, because current landings exceed both the currently codified and the anticipated proposed quota for the Angling category southern area, closure of the southern area trophy BFT fishery needs to occur regardless of the proposed quota increase.

If needed, subsequent Angling category adjustments will be published in the **Federal Register**. Information regarding the Angling category fishery for Atlantic tunas, including daily retention limits for BFT measuring 27 inches (68.5 cm) to less than 73 inches and any further Angling category adjustments, is available at *hmspermits.noaa.gov* or by calling (978) 281–9260.

HMS Angling and HMS Charter/Headboat category permit holders may catch and release (or tag and release) BFT of all sizes, subject to the requirements of the catch-and-release and tag-and-release programs at § 635.26. Anglers are also reminded that all BFT that are released must be handled in a manner that will maximize survival, and without removing the fish from the water, consistent with requirements at § 635.21(a)(1). For additional information on safe handling, see the ''Careful Catch and Release'' brochure available at *www.nmfs.noaa.gov/sfa/hms/*.

Classification

The Assistant Administrator for NMFS (AA) finds that it is impracticable and contrary to the public interest to provide prior notice of, and an opportunity for public comment on, this action for the following reasons:

The regulations implementing the 2006 Consolidated HMS FMP, as amended, provide for inseason retention limit adjustments and fishery closures to respond to the unpredictable nature of BFT availability on the fishing grounds, the migratory nature of this species, and the regional variations in the BFT fishery. The closure of the southern area Angling category trophy fishery is necessary to prevent any further overharvest of the southern area trophy fishery subquota. NMFS provides notification of closures by publishing the notice in the **Federal Register**, emailing individuals who have subscribed to the Atlantic HMS News electronic newsletter, and updating the information posted on the Atlantic Tunas Information Line and on *hmspermits.noaa.gov*.

These fisheries are currently underway and delaying this action would be contrary to the public interest as it could result in excessive trophy BFT landings that may result in future potential quota reductions for the Angling category, depending on the magnitude of a potential Angling category overharvest. NMFS must close the southern area trophy BFT fishery before additional landings of these sizes of BFT accumulate. Therefore, the AA finds good cause under 5 U.S.C. 553(b)(B) to waive prior notice and the opportunity for public comment. For all of the above reasons, there is good cause under 5 U.S.C. 553(d) to waive the 30-day delay in effectiveness.

This action is being taken under 50 CFR 635.28(a)(1), and is exempt from review under Executive Order 12866.

Authority: 16 U.S.C. 971 *et seq.* and 1801 *et seq.*

Dated: June 3, 2015.

Emily H. Menashes,

Acting Director, Office of Sustainable Fisheries, National Marine Fisheries Service.

[FR Doc. 2015–13988 Filed 6–4–15; 4:15 pm]

BILLING CODE 3510–22–P

DEPARTMENT OF COMMERCE

National Oceanic and Atmospheric Administration

50 CFR Part 648

[Docket No. 130702585–5454–02]

RIN 0648–BD42

Fisheries of the Northeastern United States; Special Management Zones for Delaware Artificial Reefs

AGENCY: National Marine Fisheries Service (NMFS), National Oceanic and Atmospheric Administration (NOAA), Commerce.

ACTION: Final rule.

SUMMARY: NMFS issues final regulations to implement Special Management Zones for four Delaware artificial reefs under the black sea bass provisions of the Summer Flounder, Scup, and Black Sea Bass Fishery Management Plan. These measures are necessary to promote orderly use of fisheries resources on artificial reefs by reducing user group conflicts, and are intended to maintain the intended socioeconomic benefits of the artificial reefs to the maximum extent practicable.

DATES: *Effective* July 9, 2015.

ADDRESSES: Copies of the Environmental Assessment and Initial Regulatory Flexibility Analysis (EA/IRFA) and other supporting documents for the Special Management Zones measures are available from Paul Perra, NOAA/NMFS, Sustainable Fisheries Division, 55 Great Republic Drive, Gloucester, MA 01930. The EA for the Special Management Zone measures is also accessible via the Internet at: *http://www.nero.noaa.gov*. The Final Regulatory Flexibility Analysis (FRFA) consists of the IRFA, public comments and responses contained in this final rule, and the summary of impacts and alternatives contained in this final rule. Copies of the small entity compliance guide are available from John K. Bullard, Regional Administrator, Greater Atlantic Region, National Marine Fisheries Service, 55 Great Republic Drive, Gloucester, MA 01930–2298.

FOR FURTHER INFORMATION CONTACT: Paul Perra, Fishery Policy Analyst, (978) 281–9153.

SUPPLEMENTARY INFORMATION: The Mid-Atlantic Fishery Management Council prepared the Summer Flounder, Scup, Black Sea Bass Fishery Management Plan (FMP) under the authority of the Magnuson-Stevens Fishery Conservation and Management Act (Magnuson-Stevens Act), 16 U.S.C. 1801 *et seq*. Regulations implementing the FMP appear at 50 CFR part 648, subparts A (general provisions), G (summer flounder), H (scup), and I (black sea bass). General regulations governing fisheries of the Northeastern U.S. also appear at 50 CFR part 648. Amendment 9 to the FMP which established conservation and management measures for the black sea bass fishery, also established a process by which the Council could recommend that Special Management Zones (SMZs) be established.

Special Management Zone Measures Background

In 2011, the Delaware Fish and Wildlife Department (DFW) requested and the Council recommended that five Delaware artificial reef sites be designated as SMZs according to the provisions of the FMP.

These artificial reefs are currently permitted by the U.S. Army Corps of Engineers (COE) in the Exclusive Economic Zone (EEZ). The FMP provides authority to implement SMZs around artificial reefs. SMZ-designated areas are used to provide for specialized fishery management regulations around artificial reefs to reduce user conflicts, protect reef habitat, and control fishing off the artificial reefs.

The SMZ request noted that the DFW received complaints from hook-and-line anglers about fouling of their fishing gear in commercial pots and lines on ocean reef sites for more than 10 years. The request also noted that the U.S. Fish and Wildlife Service (FWS) Sportfish Restoration Program (SRP) had notified DFW that these gear conflicts are not consistent with the objectives of the SRP program, which provides funding for the building and maintenance of the artificial reefs. The FWS requires that state artificial reef programs be able to limit gear conflicts by state regulations in state waters or by SMZs for sites in the EEZ. The Council reviewed DFW's request through its specific process for recommending SMZ measures to NMFS for rule making. All meetings are open to the public and meeting related materials are publicly available. Extensive background on the SMZ management measures recommendation process is not repeated here but can be found in § 648.18 and in the proposed rule for these measures (79 FR 35141). After completing its initial review, the Council recommended to NMFS that all five Delaware artificial reefs be established as SMZs. The Council also recommended that the SMZ areas be enlarged beyond their original COE permit areas by 500 yards (0.46 km) to enhance enforcement. Additionally, the Council recommended that in the established areas of the SMZs, all vessels would only be allowed to conduct fishing with hook and line and spear (including the taking of fish by hand). NMFS subsequently reviewed the Council's recommendations through the development of an EA and published a proposed rule on June 19, 2014 (79 FR 35141) that had an initial 45-day comment period. The comment period on the proposed rule was later extended (79 FR 41530) for an additional 15 days. See Comments and Responses section of this preamble for additional details.

NMFS proposed the Council's measures, applicable in the Federal waters of the EEZ and to all vessels as follows:

1. All five Delaware artificial reefs be established as SMZs;

2. The SMZ areas be enlarged beyond their original COE permit areas by 500 yards (0.46 km) for enforcement purposes; and

3. Within the established areas of the SMZs, all vessels would only be allowed to conduct fishing with hook and line and spear (including taking of fish by hand).

The New England Fishery Management Council and commercial fishermen commented on the proposed rule that implementing an SMZ at the most offshore artificial reef site (site 14) could have serious negative effects on the scallop fishery in that it would restrict scallop dredging in a highly productive scallop fishing area. Also, the DFW requested that the 0.46-km area enlargement for enforcement not be implemented because doing so would enlarge (approximately double) the size of the SMZs to cover other structures not intended to be part of the artificial reefs. DFW also stated that SMZ area enlargements for enforcement would negatively impact more commercial fishing activities and were not necessary to enforce the SMZs. In response to concerns from the scallop fleet, and because no artificial reef materials have yet been placed at site 14, DFW withdrew its request for an SMZ at that site. Also, at its August meeting (during the comment period for the proposed rule) the Mid-Atlantic Council reconsidered its recommendations for the SMZs and withdrew its requests for an SMZ at site 14 and for each SMZ to be enlarged 0.46 km for enforcement purposes. The Atlantic States Marine Fisheries Commission also supported the Mid-Atlantic Council and DFW's requested changes to the proposed rule.

Changes From the Proposed Rule

NMFS has made two changes from the proposed rule: (1) SMZ site 14 is not being implemented and (2) the proposed 0.46-km enlargement to enhance enforcement on the four remaining SMZs is not being implemented as had been proposed. These changes are being made as a result of the comments received on the June 19, 2014, proposed rule (79 FR 35141). The final boundaries for the SMZs are in Federal waters and shown in Figure 1.

Figure 1. Location of Four Delaware Artifical Reef SMZ Sites in the EEZ.

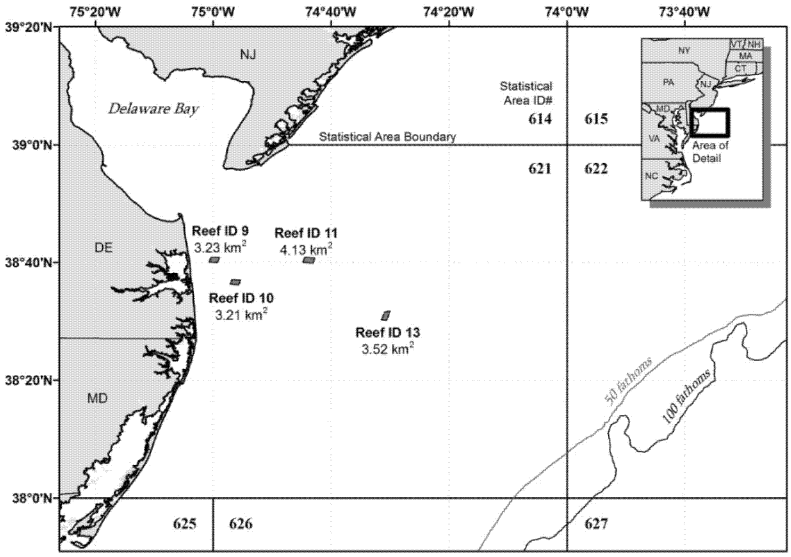

The SMZ sites are bounded by the following coordinates specified as follows:

REEF SITE 9

Corner	N. Latitude	W. Longitude
9SE	38°39.972′	74°59.298′
9SW	38°40.05′	75°0.702′
9NW	38°40.848′	75°0.402′
9NE	38°40.8′	74°58.902′
9SE	38°39.972′	74°59.298′

REEF SITE 10

Corner	N. Latitude	W. Longitude
10SE ...	38°36.198′	74°55.674′
10SW ..	38°36.294′	74°57.15′
10NW ..	38°37.098′	74°56.802′
10NE ...	38°37.002′	74°55.374′
10SE ...	38°36.198′	74°55.674′

REEF SITE 11

Corner	N. Latitude	W. Longitude
11SE ...	38°39.882′	74°43.05′
11SW ..	38°40.002′	74°44.802′
11NW ..	38°40.848′	74°44.502′
11NE ...	38°40.752′	74°42.75′
11SE ...	38°39.882′	74°43.05′

REEF SITE 13

Corner	N. Latitude	W. Longitude
13SE ...	38°30.138′	74°30.582′
13SW ..	38°30.222′	74°31.5′
13NW ..	38°31.614′	74°30.864′
13NE ...	38°31.734′	74°30.018′
13SE ...	38°30.138′	74°30.582′

Comments and Responses

On June 19, 2014 (79 FR 35141), NMFS published proposed SMZ measures for a 45-day public notice and comment, and then extended the public comment period for 15 additional days on July 16, 2014 (79 FR 41530). NMFS received 16 categories of comments from 12 individuals and/or associations during the comment period on the proposed rule. The comments were from: Four individuals; two industry groups (the Recreational Fisheries Alliance and the Fisheries Survival Found); the Mid-Atlantic Council; the New England Council; the Commission, the State of Delaware Coastal Programs and Department of Natural Resources; and the New Jersey Department of Fish and Wildlife. Two commenters supported implementing measures as proposed and two commenters objected to any implementation of the proposed measures. The majority of comments including the State of Delaware and the Mid-Atlantic Council (the initial requesters of the SMZs) supported the measures being implemented in this final rule.

Comment 1: The Mid-Atlantic Council, the Commission, the State of Delaware Department of Natural Resources, the New England Council, and the Fisheries Survival Fund, requested that NMFS not implement an SMZ at artificial reef site 14. The site does not currently have any artificial reef structure on the bottom. Commenters stated that restricting fishing gear there may have negative impacts on fisheries that use mobile gear, especially the scallop fishery.

Response: NMFS agrees and is not implementing an SMZ at reef site 14 at this time. Because there is currently no artificial reef structure at site 14, and because multiple groups have requested site 14 be withdrawn from the SMZ final measures, NMFS sees no need for designating an SMZ at site 14.

Comment 2: The Mid-Atlantic Council, the Commission, the State of Delaware Department of Natural Resources, Delaware Coastal Programs, and a member of the public requested that NMFS not implement the 0.46-km buffer (enforcement area) around the artificial reefs permit boundaries. Commenters stated this would approximately double the size of the

SMZs to cover other structures not intended to be part of the artificial reefs and negatively impact more commercial fishing activities.

Response: NMFS agrees, and is not implementing the 0.46-km enlarged enforcement area in this final rule. If enforcement issues arise over the ability to determine if vessels are fishing in or outside the SMZs, NMFS may need to revisit implementing a larger SMZ area around the artificial reefs.

Comment 3: The New Jersey Department of Fish and Wildlife commented it was not in favor of the 0.46-km enlarged enforcement area around the artificial reefs COE permit boundaries, stating it was too excessive. Their comment suggested that a 250-yard (0.23-km) enlarged enforcement area be used instead.

Response: As noted in response to comment 2, NMFS has determined that the enlarged enforcement area is not necessary and therefore the final rule implements no enforcement buffer around the SMZs.

Comment 4: Five commenters (including the Recreational Fisheries Alliance) supported implementation of the SMZs to eliminate gear conflicts and provide recreational fisheries access to the artificial reefs. Two commenters were in support of implementing SMZs at all five artificial reef sites and three commenters supported implementing SMZs at all sites except for artificial reef site 14.

Response: NMFS agrees. The SMZs are intended to reduce the commercial/recreational gear conflicts on the artificial reefs, and help ensure unimpeded access to the artificial reefs for recreational and commercial hook and line fishing. However, for reasons stated above, NMFS is implementing SMZs at all proposed artificial reef sites except site 14.

Comment 5: One commenter contended that the proposed action was not consistent with § 648.148, stating that the Code of Federal Regulations (CFR) says the SMZ would prohibit or restrain specific types of gear types, without identification of the specific gear types noted in the proposed rule.

Response: NMFS disagrees; § 648.148 states that the recipient of a COE permit for an artificial reef, fish attraction device, or other modification of habitat for purposes of fishing may request that an area surrounding and including the site be designated by the Council as an SMZ. The SMZ will prohibit or restrain the use of specific types of fishing gear that are not compatible with the intent of the permitted area. This action would restrict use of all commercial gears other than hook and line (or taking of fish by hand), which is allowable under § 648.148. This is compatible with the intent of the Delaware artificial reefs which were built with Sportfish Restoration Program (SRP) Funds.

Comment 6: One commenter stated the proposed rule did not make clear the intent of the Delaware artificial reef program and what fishing gears should be incompatible with that program. The commenter contended that the intent of the reefs is listed under 33 U.S.C. 2101(a)(5). They further stated that prohibiting gear types on the reef is a major change of the original intent the reefs were permitted under, and the public should be granted another comment period.

Response: NMFS disagrees. The reefs were built with SRP funding to enhance recreational fishing. COE regulations at 33 U.S.C. 2101(a)(5) are designed to permit artificial reefs for the benefit of commercial and recreational fishing. All reefs need not be built to simultaneously benefit commercial and recreational fishing. However, in this case, the SMZs would benefit recreational fishing, and hook and line commercial fishing. NMFS provided ample opportunity for public comment, extending the comment period from 45 to 60 days. In addition, the SMZs were discussed at multiple Council and Commission meetings. An additional comment period on the intent of the reef program or the SMZ measures is not needed. However, when the Delaware artificial reef program COE permit for the artificial reefs is renewed or if there are further regulatory actions for the SMZs, the public will have further opportunity to comment on the SMZs, reefs and their intent, or both.

Comment 7: One commenter stated that the Council's monitoring committee failed to consider all applicable law as required by § 648.146(a)(4) and did not mention the National Fisheries Enhancement Act of 1984 (NFEA).

Response: The monitoring committee was aware of the NFEA, but saw no issues to report on or mention in its report. NMFS considered the NFEA in the development of the EA and the proposed rule for the SMZs, and concluded that implementing the SMZ's did not conflict with the NFEA.

Comment 8: One Commenter stated that the SMZs will be in violation of the NFEA under 33 U.S.C. 2101(a)(5) because it will not increase fishing opportunities for commercial fishermen, will not allow increased production of fisheries products (conchs, lobsters), and will not increase fuel efficiency of commercial fishermen.

Response: NMFS disagrees. All reefs need not be built to simultaneously benefit commercial and recreational fishing. Under the NFEA, it states that properly designed, constructed, and located artificial reefs can enhance the habitat and diversity of fishery resources; enhance United States recreational and commercial fishing opportunities; increase the production of fishery products in the United States; increase the energy efficiency of recreational and commercial fisheries; and contribute to the United States and coastal economies. Implementing SMZs for the Delaware artificial reefs will increase recreational and commercial hook and line fisheries opportunities, and likely increase energy efficiency of the recreational fleet (by reducing their search time for high quality fishing areas) and contribute to the United States and coastal economies. The Delaware reefs were built with SRP funds to specifically enhance recreational fisheries.

Comment 9: One commenter stated that the SMZ will be in violation of the NFEA because it says artificial reefs shall be managed in a manner which will facilitate access and utilization by commercial fishermen. The stated SMZ measures inhibit rather than facilitate commercial fishing.

Response: NMFS disagrees. The SMZ measures are not in violation of the NFEA which provides guidance that permit artificial reefs to be built for the benefit of commercial and recreational fishing. Under the NFEA, all reefs need not be built to simultaneously benefit commercial and recreational fishing. However, the SMZs implemented under this rule will enhance commercial hook and line fishing on the artificial reefs.

Comment 10: One commenter stated that the catch record for Delaware's 27 licensed commercial hook and line fishermen shows they do not utilize these artificial reefs. Therefore, to allow hook and line only is not viable and a violation of 33 U.S.C. 2102(2).

Response: NMFS disagrees. The NFEA set standards for artificial reefs that they be based on the best scientific information available, be sited and constructed, and subsequently monitored and managed in a manner which will:

(1) Enhance fishery resources to the maximum extent practicable;

(2) Facilitate access and utilization by United States recreational and commercial fishermen;

(3) Minimize conflicts among competing uses of waters covered under this chapter and the resources in such waters;

(4) Minimize environmental risks and risks to personal health and property; and

(5) Be consistent with generally accepted principles of international law and shall not create any unreasonable obstruction to navigation.

Under the NFEA, all artificial reefs need not be built to simultaneously benefit commercial and recreational fishing. In the case of the Delaware artificial reefs, there is a need to minimize recreational and commercial fishing conflicts and ensure the recreational fleet access to the reefs that were built with SRP funding. Some of the commercial gears deployed on the artificial reefs (fish pots and buoys) may currently be physically inhibiting the use of commercial hook and line fishing on the reefs. Delaware's hook and line commercial fishermen may not currently be fishing the artificial reefs, but they will have the option to fish the reefs without conflict with stationary commercial gears once the SMZs are implemented.

Comment 11: One commenter stated that the word ''among'' is used in the NFEA when saying artificial reefs shall be utilized in a manner which will minimize conflicts among competing users, 33 U.S.C. 2101(3). The commenter contended that the SMZ measures limits use to two groups (hook and line and spear) and therefore violates the NFEA.

Response: NMFS disagrees; the SMZ's will allow continued use among all to fish the artificial reefs. They will just be limited in the type of gear they can use. Anyone with proper commercial fishing permits may continue to fish on the artificial reefs using hook and line or taking by hand, and private, charter, and party recreational vessels may continue to fish the artificial reefs with hook and line gear.

Comment 12: One commenter stated that the SMZs would violate the NFEA, which states that reefs shall be managed in a manner which will minimize conflicts among competing users. The commenter contended that by eliminating the use of commercial gear types (pots) and allowing only angling and spear, there are no competing uses of the reefs.

Response: NMFS disagrees. Under the NFEA, all artificial reefs need not be built to simultaneously benefit commercial and recreational fishing. In the case of the Delaware artificial reefs, there is a need to minimize recreational and commercial fishing conflicts, and ensure the recreational fleet access to the reefs that have been built with SRP funding. Also, under the SMZ measures commercial hook and line fishermen may choose to compete for use of the artificial reefs.

Comment 13: One commenter stated that FWS threating to withdraw funding unless reef access/usage rules are put in place is akin to bribery. The commenter suggested that the Federal prosecutor should be called to investigate. The commenter also stated the New Jersey Department of Environmental Protection (NJDEP) was put in a similar situation by FWS where SRP funds could be withdrawn, and in that case New Jersey elected not to enact SMZs.

Response: The FWS does provide SRP funding to DFW to support its artificial reef program. The SRP is supported by the Dingell-Johnson Sport Fish Restoration Act, which uses funds provided by excise taxes on sport fishing equipment and motorboat fuels. NMFS understands from the FWS that only projects that benefit recreationally important finfish species are eligible for SRP funding. The development and maintenance of artificial reefs in marine waters is just one type of project supported by SRP. These funds are also used for research and survey work, boat ramp construction, aquatic resources education programs, fish hatcheries, aquatic habitat improvement, land acquisition for recreational fishing access, and many other types of projects. The role of the FWS is to distribute these funds and make sure they are spent according to the law and regulations under (50 CFR part 80). While NMFS understands the NJDEP can no longer use SRP funding for its artificial reef program, it still receives its full SRP allocation for other appropriate SRP eligible projects.

SRP funds are apportioned to states based on their relative number of licensed anglers and land and water area. Delaware and New Jersey are both minimum apportionment states, so they each receive one percent of funds available each year. This was $3.2 million in fiscal year 2014. Like all other states, Delaware and New Jersey decide how to spend their SRP funds. Delaware requested and received $595,500 of Federal funds for artificial reef work for 2014. If SMZs are not designated on artificial reefs off Delaware, then the FWS may withhold future SRP funds from the DFW artificial reef program. Thus, SRP funds would not be allowed to be used on the reefs due to the continuing conflicts with commercial fishermen. This is in accordance with SRP regulations (50 CFR part 80). If that were to happen, then Delaware will likely be reminded by FWS to spend its SRP funds on other eligible projects.

Comment 14: One commenter was against building artificial reefs. The commenter stated artificial reefs are created for use as cheap dumping grounds and are making our oceans garbage dumps. The commenter also stated artificial reefs are a deterrent to a healthy ocean.

Response: NMFS considers that the Delaware Artificial Reef Program is being conducted responsibly and successfully with extensive regulatory oversight. State artificial reef programs and their permitting, such as the Delaware Artificial Reef Program, are among the most heavily regulated activities conducted in our bays and coastal oceans. NMFS took the lead in 1984, by writing the National Artificial Reef Plan (subsequently updated by the joint Commission/Gulf States Marine Fisheries Commission artificial reef committees in 2007). This framework described the characteristics of acceptable reef material. Materials of opportunity must be durable, stable, and non-toxic. These guidelines have led to the banning of some materials used in the 1970's such as unballasted tires, and wooden or fiberglass vessels, resulting in ecologically sound artificial reefs since the mid-1980s. All Atlantic coast states with artificial reef programs have written state artificial reef plans, modeled after the National Artificial Reef Plan. State reef coordinators are members of the Commission's Artificial Reef Committee and meet periodically to learn from one another's experience resulting in less trial and error in selecting materials and building reefs. All state reef programs are permitted through state agencies dealing with sub-aqueous lands, historical and cultural affairs or coastal management and through the COE on the Federal level. Materials are approved or banned by the COE during the permitting process. NMFS, FWS, and the Environmental Protection Agency (EPA) have input through the COE into this process. When a new, unanticipated material becomes available for reefing, input is sought from EPA and other agencies and the material may then be listed as acceptable for reef building in the COE permit. In Delaware, the following agencies have had input on the Delaware Reef Program state and Federal permits and have been satisfied with the activities and materials used: Delaware Division of Historical and Cultural Affairs; Delaware Division of Water Resources Wetlands Section; Delaware Coastal Management Program; COE; FWS; NMFS; and EPA.

Regarding vessels that are used in artificial reef building, Delaware has worked closely with EPA to eliminate toxins. Delaware routinely exceeds the best management practices for reefing of vessels, developed by the Commission's

Artificial Reef Committee. Delaware artificial reefs comply with the provisions of the Toxic Substances Control Act.

NMFS assures artificial reefs are not ''a deterrent to a healthy ocean.'' Artificial reefs provide a unique community which is especially rare in the Mid-Atlantic region. Monitoring has shown an increase in available food for fish per square foot on the Delaware artificial reefs. The artificial reefs can increase fishing opportunities and provide economic benefits to coastal communities.

Comment 15: One commenter requested that NMFS exempt mobile bottom-tending gears from any restriction in the site 14 SMZ. The commenter correctly stated there is currently no artificial reef in Area 14. The commenter further stated that implementing an SMZ at this time that would restrict mobile gear would create adverse impacts on the scallop fishery with no associated benefits.

Response: NMFS agrees. The final rule does not implement an SMZ at Site 14 (see response to comment 1). Both Delaware and the Mid-Atlantic Council have withdrawn their requests for SMZ status for site 14.

Comment 16: One commenter stated that NMFS is trying to hide the publication of the SMZ proposed rule from the public, by not putting a notice of its publication on its Web site.

Response: NMFS gave appropriate time and notice for the public to comment. NMFS published the SMZ proposed rule in the **Federal Register** (79 FR 35141) on June 19, 2014, with a comment period to August 4, 2014; posted a story about the proposed rule on its Greater Atlantic Region (GARFO) Web page on June 24, 2014; and on July 16, 2014, extended the comment period an additional 15 days to August 19, 2014 (79 FR 41530). The rule was available on the Federal government's e-rulemakeing portal, *regulations.gov*. Links to the rule and associated EA were on the GARFO Web site, *http://www.greateratlantic.fisheries.noaa.gov/*.

Classification

Pursuant to section 304(b)(1)(A) of the Magnuson-Stevens Act, the Assistant Administrator has determined that this final rule is consistent with the Summer Flounder, Scup, and Black Sea Bass FMP, other provisions of the Magnuson-Stevens Act, and other applicable law.

This rule has been determined to be not significant for purposes of Executive Order 12866.

Final Regulatory Flexibility Analysis

Introduction

The Regulatory Flexibility Act (RFA) requires that Federal agencies analyze the expected impacts of a rule on small business entities, including consideration of disproportionate and/or significant adverse economic impacts on small entities that are directly regulated by the action. As part of the analysis, Federal agencies must also consider alternatives that minimize impacts on small entities while still accomplishing the objectives of the rule. The required analysis is used to inform the agency, as well as the public, of the expected impacts of the various alternatives included in the rule, and to ensure the agency considers other alternatives that minimize the expected impacts while still meeting the goals and objectives of the action, and that are still consistent with applicable law. Section 604 of the RFA, 5 U.S.C. 604, requires Federal agencies to prepare a Final Regulatory Flexibility Analysis (FRFA) for each final rule.

A Summary of the Significant Issues Raised by the Public in Response to the IRFA, a Summary of the Agency's Assessment of Such Issues, and a Statement of Any Changes Made in the Final Rule as a Result of Such Comments

Major issues on the proposed action were raised in five ways:

1. The New England Council and the commercial industry was concerned that implementing an SMZ at the most offshore artificial reef site would have serious negative effects on the scallop fishery.

2. The DFW requested that the 500-yard (0.46 km) buffer areas area (enlargements for enforcement) not be implemented because they would approximately double the size of the SMZs to cover other structures not intended to be part of the artificial reefs;

3. The DFW also stated that the SMZ 0.46-km area enlargements would negatively impact more commercial fishing activities and were not necessary to enforce the SMZs.

4. In response to concerns from the scallop fleet, and because no artificial reef materials have yet been place at site 14, DFW withdrew its request for an SMZ at that site.

5. At its 2014 August meeting, which was during the comment period for the proposed rule, the Mid-Atlantic Council reconsidered its recommendations for the SMZs and withdrew its requests for an SMZ at site 14 and for each SMZ to be enlarged by 0.46 km for enforcement purposes.

Based on the comments received on the proposed rule and the Mid-Atlantic Council's revised recommendations, site 14 has been dropped from SMZ implementation, and each of the remaining four artificial reef SMZ are not extended by 0.46 km (see comment 2 in COMMENTS AND RESPONSES for this rule for more information). The SMZs are implemented to have the same size and retain the same boundaries as prescribed on their respective artificial reef site COE permit.

These changes from the proposed rule to the final rule will reduce impacts on the scallop fishery because site 14 is dropped providing them access to that area and removing the extended 0.46-km enforcement area from the remaining four artificial reefs SMZs will provide more ability to all commercial vessels to fish nearer the artificial reefs than was proposed.

Description of an Estimate of the Number of Small Entities to Which the Rule Would Apply

The Small Business Administration (SBA) updated its standards (effective July 14, 2014 (79 FR 33647; June 12, 2014)) to increase what defines a small fishing business, based on gross revenues as: A finfish business of up to $20.5 million, a commercial shellfishing business of up to $5.5 million, and a for-hire recreational fishing businesses of up to $7.5 million. Pursuant to the RFA, and prior to SBA's June 12 interim final rule, an initial regulatory flexibility analysis was developed for this action using SBA's former size standards. NMFS has reviewed the analyses prepared for this action in light of the new size standards. Under either the former, lower size standards, or newer higher standards, all entities considered as possibly subject to this action are considered small entities (excepting one large entity that operated at site 14, but site 14 has been dropped from this action). Thus all entities affected by the final rule are considered small under the new standards. NMFS has determined that the new size standards do not affect analyses prepared for this action. All affected entities would still be considered small under the new or old standard. In January 2015, because of the changes from the proposed rule to the final rule regarding site 14, the size of the SMZs, and the new SBA standards, NMFS updated its original IRFA analysis. The January 2015 IRFA conforms to the updated standards, does not include site 14, and applies to the smaller size SMZs created under this final rule.

This rule applies to all Federal permit holders except recreational for-hire

permit holders. Thus, the affected business entities of concern are businesses that hold commercial Federal fishing permits with the exception of those that fish with hook and line. While all business entities that hold commercial Federal fishing permits could be directly affected by these regulations, not all business entities that hold Federal fishing permits fish in the areas identified as potential SMZs. Those who actively participate, *i.e.,* land fish, in the areas identified as potential SMZs would be the group of business entities that are directly impacted by the regulations.

The number of possible affected entities (those with a fishing history in the SMZs) are described in Table 1, through an enumeration of the number of commercial fishing vessels with recent activity within the four reef sites (sites 9, 10, 11, and 13), by gear type.

TABLE 1—NUMBER OF UNIQUE VESSELS WITH LANDINGS WITHIN THE COORDINATES OF THE FOUR REEF SITES (SITES 9, 10, 11, AND 13) BY GEAR TYPE, AND THEIR PERCENT OF TOTAL ANNUAL EX-VESSEL REVENUE LANDED AT THE REEF SITES

	Gear type			Percent of total annual revenue			
	Pot/trap	Dredge	Trawl	<5%	5–9%	10–19%	20–29%
2008	1	0	0	1	0	0	0
2009	2	0	0	1	1	0	0
2010	0	0	1	1	0	0	0

During 2008, 2009, and 2010, four vessels reported landings from within the artificial reef sites (Table 1). Because of the uncertainty of reporting vessel areas fished with VTRs, impacts for vessels fishing within the artificial reef areas and beyond to 0.46 km were also considered. Only two commercial vessels reported landings within 0.46 km of the reef sites in each of these years, one vessel reported landings in two of the three years, and 12 vessels reported landings in only one of the three years. This implies a total of eight unique vessels, excluding site 14, which is not included, reported landings within the artificial reef sites during the full 3-year period.

Total revenue earned by these business was derived from both shellfishing and finfishing, but the highest percentage of average annual revenue for the majority of the businesses was from shellfishing. Of the 14 unique fishing business entities potentially estimated to be affected because of reporting VTRs within 0.46 km of the artificial reefs around the 4 reef sites, 8 entities earned the majority of their total revenues (*i.e.,* from all species and areas fished) from landings of shellfish, and 6 entities earned the majority of the their total revenues from landings of finfish. Thus, eight of the potentially affected businesses are classified as shellfishing business entities and six as finfishing business entities.

Average annual gross revenue estimates calculated from the most recent 3 years of available Northeast region dealer data (2010–2012) indicate that under the preferred alternative, 14 of the 14 potentially affected business entities are considered small (8 shellfish and 6 finfish).

Under the preferred alternative, only three vessels show VTR operations within the artificial reef areas with no vessels obtaining more than 9 percent of its revenue from fishing within the artificial reef boundaries (Table 1).

Description of Projected Reporting, Recordkeeping, and Other Compliance Requirements

This action does not introduce any new reporting, recordkeeping, or other compliance requirements.

Description of the Steps the Agency Has Taken To Minimize the Significant Economic Impact on Small Entities Consistent With the Stated Objectives of Applicable Statutes

Site 14 has been dropped from SMZ implementation, and each of the remaining four artificial reefs SMZ are implemented without the additional enforcement buffer. The SMZs are implemented to have the same size and retain the same boundaries as prescribed on their respective artificial reef site COE permit. These changes from the proposed rule minimizes impacts on the commercial vessels (small entities) that fish near the artificial reefs by allowing them to retain as much of their traditional fishing grounds as possible.

Small Entity Compliance Guide

Section 212 of the Small Business Regulatory Enforcement Fairness Act of 1996 states that, for each rule or group of related rules for which an agency is required to prepare a FRFA, the agency shall publish one or more guides to assist small entities in complying with the rule, and shall designate such publications as ''small entity compliance guides.'' The agency shall explain the actions a small entity is required to take to comply with a rule or group of rules. As part of this rulemaking process, we will send a small entity compliance guide to all Federal permit holders affected by this action. In addition, copies of this final rule and guide (*i.e.,* information bulletin) are available from NMFS online at *http://www.greateratlantic.fisheries.noaa.gov/.*

List of Subjects in 50 CFR Part 648

Fisheries, Fishing, Reporting and recordkeeping requirements.

Dated: June 1, 2015.

Samuel D. Rauch III,

Deputy Assistant Administrator for Regulatory Programs, National Marine Fisheries Service.

For the reasons set out in the preamble, 50 CFR part 648 is amended as follows:

PART 648—FISHERIES OF THE NORTHEASTERN UNITED STATES

■ 1. The authority citation for part 648 continues to read as follows:

Authority: 16 U.S.C. 1801 *et seq.*

■ 2. In § 648.14, paragraph (p)(1)(vi) is added to read as follows:

§ 648.14 Prohibitions.

* * * * *

(p) * * *

(1) * * *

(vi) *Special management zone.* Fail to comply with any of the restrictions for special management zones specified in § 648.148(b).

* * * * *

■ 3. Revise § 648.148 to read as follows:

§ 648.148 Special management zones.

(a) *General.* The recipient of a U.S. Army Corps of Engineers permit for an artificial reef, fish attraction device, or

other modification of habitat for purposes of fishing may request that an area surrounding and including the site be designated by the MAFMC as a special management zone (SMZ). The MAFMC may prohibit or restrain the use of specific types of fishing gear that are not compatible with the intent of the artificial reef or fish attraction device or other habitat modification within the SMZ. The establishment of an SMZ will be effected by a regulatory amendment, pursuant to the following procedure: An SMZ monitoring team comprised of members of staff from the MAFMC, NMFS Greater Atlantic Regional Fisheries Office, and NMFS Northeast Fisheries Science Center will evaluate the request in the form of a written report.

(1) *Evaluation criteria.* In establishing an SMZ, the SMZ monitoring team will consider the following criteria:

(i) Fairness and equity;

(ii) Promotion of conservation;

(iii) Avoidance of excessive shares;

(iv) Consistency with the objectives of Amendment 9 to the Summer Flounder, Scup, and Black Sea Bass Fishery Management Plan, the Magnuson-Stevens Act, and other applicable law;

(v) The natural bottom in and surrounding potential SMZs; and

(vi) Impacts on historical uses.

(2) The MAFMC Chairman may schedule meetings of MAFMC's industry advisors and/or the SSC to review the report and associated documents and to advise the MAFMC. The MAFMC Chairman may also schedule public hearings.

(3) The MAFMC, following review of the SMZ monitoring team's report, supporting data, public comments, and other relevant information, may recommend to the Regional Administrator that an SMZ be approved. Such a recommendation will be accompanied by all relevant background information.

(4) The Regional Administrator will review the MAFMC's recommendation. If the Regional Administrator concurs in the recommendation, he or she will publish a proposed rule in the **Federal Register** in accordance with the recommendations. If the Regional Administrator rejects the MAFMC's recommendation, he or she shall advise the MAFMC in writing of the basis for the rejection.

(5) The proposed rule to establish an SMZ shall afford a reasonable period for public comment. Following a review of public comments and any information or data not previously available, the Regional Administrator will publish a final rule if he or she determines that the establishment of the SMZ is supported by the substantial weight of evidence in the record and consistent with the Magnuson-Stevens Act and other applicable law.

(b) *Approved/Established SMZs—Delaware Special Management Zone Areas.* Special management zones are established for Delaware artificial reef permit areas #9, 10, 11, and 13, in the area of the U.S. Exclusive Economic Zone. From January 1 through December 31 of each year, no fishing vessel or person on a fishing vessel may fish in the Delaware Special Management Zones with any gear except hook and line and spear fishing (including the taking of fish by hand). The Delaware Special Management Zones are defined by straight lines connecting the following point's N. latitude and W. longitude in the order stated:

(1) *Delaware artificial reef #9.*

Point	Corner	N. latitude	W. longitude
1	9SE	38°39.972′	74°59.298′
2	9SW	38°40.05′	75°0.702′
3	9NW	38°40.848′	75°0.402′
4	9NE	38°40.8′	74°58.902′
5	9SE	38°39.972′	74°59.298′

(2) *Delaware artificial reef #10.*

Point	Corner	N. latitude	W. longitude
1	10SE	38°36.198′	74°55.674′
2	10SW	38°36.294′	74°57.15′
3	10NW	38°37.098′	74°56.802′
4	10NE	38°37.002′	74°55.374′
5	10SE	38°36.198′	74°55.674′

(3) *Delaware artificial reef #11.*

Point	Corner	N. latitude	W. longitude
1	11SE	38°39.882′	74°43.05′
2	11SW	38°40.002′	74°44.802′
3	11NW	38°40.848′	74°44.502′
4	11NE	38°40.752′	74°42.75′
5	11SE	38°39.882′	74°43.05′

(4) *Delaware artificial reef #13.*

Point	Corner	N. latitude	W. longitude
1	13SE	38°30.138′	74°30.582′
2	13SW	38°30.222′	74°31.5′
3	13NW	38°31.614′	74°30.864′
4	13NE	38°31.734′	74°30.018′

Point	Corner	N. latitude	W. longitude
5	13SE	38°30.138′	74°30.582′

[FR Doc. 2015–14021 Filed 6–8–15; 8:45 am]

BILLING CODE 3510–22–P

DEPARTMENT OF COMMERCE

National Oceanic and Atmospheric Administration

50 CFR Part 697

RIN 0648–AT31

Atlantic Coastal Fisheries Cooperative Management Act Provisions; American Lobster Fishery; Trap Transfer Program Implementation

AGENCY: National Marine Fisheries Service (NMFS), National Oceanic and Atmospheric Administration (NOAA), Commerce.

ACTION: American lobster trap transfer program implementation.

SUMMARY: This document announces the implementation of the American lobster trap transfer program. It is necessary because we deferred the start of the Program in the final rule approving the Program until a centralized trap transfer database was ready. Significant progress has been made on the centralized database. We are ready to announce that we will begin the Trap Transfer Program. This document alerts all Federal American lobster permit holders that trap transfer applications will soon be accepted.

DATES: Federal lobster permit holders may submit applications to transfer traps for the 2016 fishing year from August 1, 2015, through September 30, 2015. Revised trap allocations resulting from the trap transfers will take effect at the start of the 2016 Federal fishing year, May 1, 2016.

ADDRESSES: Submit trap transfer applications to Lobster Trap Transfer Program, NMFS, 55 Great Republic Drive, Gloucester, MA 01930. A copy of the trap transfer application is available at: *http://www.greateratlantic.fisheries.noaa.gov/aps/forms.html*.

FOR FURTHER INFORMATION CONTACT: Allison Murphy, Fishery Policy Analyst, 978–281–9122.

SUPPLEMENTARY INFORMATION: NMFS published a final rule (79 FR 19015, April 7, 2014), that established a Trap Transfer Program for Lobster Conservation Management Areas 2, 3, and the Outer Cape, consistent with the recommendations of the Atlantic States Marine Fisheries Commission in its Interstate Fishery Management Plan for American Lobster. This program will allow Federal permit holders to buy and sell all or part of a permit's trap allocation for these three areas to other Federal permit holders.

The final rule deferred the Trap Transfer Program's implementation date until the Commission completed the development of a centralized trap transfer database. A complete centralized database is needed to ensure that states and the agency are using the same consolidated and verified information at the beginning and end of the trap transfer period. At the time the final rule published, the trap transfer database was incomplete and we elected to defer implementation of the Trap Transfer Program until the Atlantic Coastal Cooperative Statistics Program (ACCSP), in collaboration with us, the Commission, and the states, could complete the comprehensive database. Database development has been completed and it has been tested by state and Federal partners. The database is now ready to track trap transfers.

Accordingly, we are ready to announce that the trap transfer application period will be from August 1 through September 30 of each year. All Federal permit holders requesting transfers for fishing year 2016 must apply to NMFS in writing no earlier than August 1, 2015, and no later than September 30, 2015. Applications received after September 30, 2015, will not be processed. A copy of the trap transfer application is available at: *http://www.greateratlantic.fisheries.noaa.gov/aps/forms.html*. We will approve or deny trap transfer applications pursuant to the regulations at 50 CFR 697.27 (*http://www.ecfr.gov/cgi-bin/text-idx?c=ecfr&tpl=/ecfrbrowse/Title50/50cfr697_main_02.tpl*). We urge all permit holders to be aware of these regulations before entering into trap transfer agreements. Approved trap transfers will not be effective until the start of the 2016 fishing year.

Authority: 16 U.S.C. 1801 *et seq.*; 16 U.S.C. 5101 *et seq.*

Dated: June 4, 2015.

Emily H. Menashes,

Acting Director, Office of Sustainable Fisheries, National Marine Fisheries Service.

[FR Doc. 2015–14049 Filed 6–8–15; 8:45 am]

BILLING CODE 3510–22–P

Proposed Rules

Federal Register
Vol. 80, No. 110
Tuesday, June 9, 2015

This section of the FEDERAL REGISTER contains notices to the public of the proposed issuance of rules and regulations. The purpose of these notices is to give interested persons an opportunity to participate in the rule making prior to the adoption of the final rules.

DEPARTMENT OF AGRICULTURE

Agricultural Marketing Service

7 CFR Part 1211

[Document Number AMS–FV–11–0074; PR–B2]

RIN 0581–AD24

Hardwood Lumber and Hardwood Plywood Promotion, Research and Information Order; Referendum Procedures

AGENCY: Agricultural Marketing Service.

ACTION: Proposed rule; supplemental notice of proposed rulemaking.

SUMMARY: The U.S. Department of Agriculture (USDA) is proposing to amend the 2013 proposed rule on procedures for conducting a referendum to determine whether issuance of a proposed Hardwood Lumber and Hardwood Plywood Promotion, Research and Information Order (Order) is favored by manufacturers of hardwood lumber and hardwood plywood. The procedures would also be used for any subsequent referendum under the Order. USDA is reopening the comment period with respect to specific issues identified in this proposed rule. USDA is taking this action in response to the extensive comments received in response to a separate 2013 proposed rule on specific provisions of the proposed Order. A supplemental notice proposing to amend the 2013 proposed Order is being published separately in this issue of the **Federal Register**. The changes proposed herein are conforming changes to ensure definitions are the same in the proposed Order and proposed referendum procedures.

DATES: Comments must be received by July 9, 2015.

ADDRESSES: Interested persons are invited to submit written comments concerning this supplemental proposal. Comments may be submitted on the Internet at: *http://www.regulations.gov* or to the Promotion and Economics Division, Fruit and Vegetable Program, AMS, USDA, 1400 Independence Avenue SW., Room 1406–S, Stop 0244, Washington, DC 20250–0244; facsimile: (202) 205–2800. All comments should reference the document number and the date and page number of this issue of the **Federal Register** and will be made available for public inspection, including name and address, if provided, in the above office during regular business hours or it can be viewed at *http://www.regulations.gov.*

FOR FURTHER INFORMATION CONTACT: Patricia A. Petrella, Marketing Specialist, Promotion and Economics Division, Fruit and Vegetable Program, AMS, USDA, 1400 Independence Avenue SW., Room 1406–S, Stop 0244, Washington, DC 20250–0244; telephone: (301) 334–2891; facsimile (301) 334–2896; or electronic mail: *Patricia.Petrella@ams.usda.gov.*

SUPPLEMENTARY INFORMATION: This proposal is issued pursuant to the Commodity Promotion, Research and Information Act of 1996 (1996 Act) (7 U.S.C. 7411–7425).

As part of this rulemaking process, two proposed rules were published in the **Federal Register** on November 13, 2013. One proposal pertained to the proposed Order (78 FR 68298) and a second pertained to proposed referendum procedures (78 FR 67979). Both proposals provided for a 60-day comment period which ended January 13, 2014. On January 16, 2014, a notice was published in the **Federal Register** that reopened and extended the comment period on the proposed Order until February 18, 2014 (79 FR 1805). A total of 939 comments were received in response to the proposed Order and 63 comments were received in response to the proposed referendum procedures.

Executive Order 12866 and Executive Order 13563

Executive Orders 12866 and 13563 direct agencies to assess all costs and benefits of available regulatory alternatives and, if regulation is necessary, to select regulatory approaches that maximize net benefits (including potential economic, environmental, public health and safety effects, distributive impacts, and equity). Executive Order 13563 emphasizes the importance of quantifying both costs and benefits, of reducing costs, of harmonizing rules, and of promoting flexibility. This action has been designated as ''non-significant regulatory action'' under section 3(f) of Executive Order 12866. Accordingly, the Office of Management and Budget (OMB) has waived the review process.

Executive Order 13175

This action has been reviewed in accordance with the requirements of Executive Order 13175, Consultation and Coordination with Indian Tribal Governments. The review reveals that this regulation would not have substantial and direct effects on Tribal governments and would not have significant Tribal implications.

Executive Order 12988

This proposal has been reviewed under Executive Order 12988, Civil Justice Reform. It is not intended to have retroactive effect. Section 524 of the 1996 Act (7 U.S.C. 7423) provides that it shall not affect or preempt any other Federal or state law authorizing promotion or research relating to an agricultural commodity.

Under section 519 of the 1996 Act (7 U.S.C. 7418), a person subject to an order may file a written petition with USDA stating that an order, any provision of an order, or any obligation imposed in connection with an order, is not established in accordance with the law, and request a modification of an order or an exemption from an order. Any petition filed challenging an order, any provision of an order, or any obligation imposed in connection with an order, shall be filed within two years after the effective date of an order, provision, or obligation subject to challenge in the petition. The petitioner will have the opportunity for a hearing on the petition. Thereafter, USDA will issue a ruling on the petition. The 1996 Act provides that the district court of the United States for any district in which the petitioner resides or conducts business shall have the jurisdiction to review a final ruling on the petition, if the petitioner files a complaint for that purpose not later than 20 days after the date of the entry of USDA's final ruling.

Background

In June 2011, USDA received a proposal for a national research and promotion program for hardwood lumber and hardwood plywood from the Blue Ribbon Committee (BRC). The BRC is a committee of 14 hardwood lumber and hardwood plywood

industry leaders representing small and large manufacturers geographically distributed throughout the United States.

The BRC proposed a program that would be financed by an assessment on hardwood lumber and hardwood plywood manufacturers and administered by a board of industry members selected by the Secretary. The purpose of the program would be to strengthen the position of hardwood lumber and hardwood plywood in the marketplace and maintain and expand markets for hardwood lumber and hardwood plywood. A referendum would be held among eligible hardwood lumber and hardwood plywood manufacturers to determine whether they favor implementation of the program prior to it going into effect.

As previously stated, two proposed rules were published in the **Federal Register** on November 13, 2013. One proposal pertained to the proposed Order and a second pertained to proposed referendum procedures. Both proposals provided for a 60-day comment period which ended January 13, 2014. The comment period on the proposed Order was reopened and extended until February 18, 2014. A total of 939 comments were received in response to the proposed Order. Sixty-three comments were received in response to the proposed referendum procedures. Upon review, these 63 comments were actually in reference to the proposed Order rather than the referendum procedures.

Many of the comments included questions about fundamental provisions of the program as proposed. As a result, USDA is reopening the comment period to solicit additional comments on specific areas in the November 2013 proposal regarding the proposed Order. A supplemental notice of proposed rulemaking is published elsewhere in this issue of the **Federal Register** to amend the proposed Order.

USDA is also reopening the comment period to solicit comments on proposed conforming changes that are necessary to the November 2013 proposed rule regarding the referendum procedures to ensure that definitions are the same in the proposed Order and referendum procedures. The proposed conforming changes open for comment are detailed in the section titled Scope of Supplemental Notice of Proposed Rulemaking.

Clarification Regarding Exports and Imports

In this document, USDA is clarifying that exports would be covered under the program. The background section of the November 2013 proposed rule on referendum procedures (78 FR 67979) inadvertently stated that exports would be exempted from the proposed program. USDA is also reiterating that imports would not be covered under the program. Several commenters raised this question during the comment period in response to the November 2013 proposed Order.

In this document, USDA is also informing stakeholders of a supplemental notice of proposed rulemaking published elsewhere in this issue of the **Federal Register** to the separate 2013 proposal concerning the proposed Order (November 13, 2013; 78 FR 68298).

Scope of Supplemental Notice of Proposed Rulemaking

Proposed Modifications to Previously Proposed Provisions

USDA is proposing to revise provisions of the previously proposed referendum procedures to make conforming changes to ensure definitions are the same in the proposed Order and proposed referendum procedures. USDA is also proposing to add five definitions that were inadvertently omitted from the November 2013 proposed referendum procedures. USDA requests comments on the proposed revisions which are described in the following paragraphs.

Definitions

USDA proposes to simplify section 1211.101 of the November 2013 proposed referendum procedures by removing the paragraph designations for the listed definitions. The definitions would continue to be listed in alphabetical order.

Eligible Hardwood Lumber and Hardwood Plywood Manufacturer

USDA is proposing to modify the term ''eligible hardwood lumber and hardwood plywood manufacturer'' as defined in the November 2013 proposed referendum procedures in section 1211.101 (previously proposed paragraph (d)) to mean any current hardwood lumber manufacturer with annual sales of $2 million or more and current hardwood plywood manufacturers with annual sales of $10 million or more during the representative period. The November 2013 proposed rule inadvertently indicated that only sales within the United States would be included in this definition. The designation regarding paragraph (d) in section 1211.101 would be removed.

Green Air Dried (G/AD)

USDA is proposing to add a new definition to section 1211.101 of the November 2013 proposed referendum procedures to define the term ''green air dried (G/AD)'' to mean green hardwood lumber or hardwood lumber that has been dried by exposure to air in a yard or shed, without artificial heat. This term is needed to address concerns raised by commenters regarding how green air dried lumber would be handled under the proposed program.

Green (G) Hardwood Lumber

USDA is proposing to add a new definition to section 1211.101 of the November 2013 proposed referendum procedures to define the term ''green hardwood lumber'' to mean hardwood lumber that has not been kiln dried or air dried. This term was inadvertently omitted from the November 2013 proposed referendum procedures.

Hardwood Lumber

USDA is proposing to modify the term ''hardwood lumber'' as defined in the November 2013 proposed referendum procedures in section 1211.101 (previously proposed paragraph (e)) to clarify that it includes yellow poplar in the list of trees referenced, and that the respective trees must be grown in the United States. This modification is proposed in response to comments received requesting that the term be clarified. Thus, the term hardwood lumber would mean timber from the wood of a cypress tree or a deciduous, broad leafed tree (including but not limited to aspen, birch, cypress, poplar, *yellow poplar,* maple, cherry, walnut and oak) *grown in the United States* that has been sawn into boards or blocks by a sawmill in the United States. The designation regarding paragraph (e) in section 1211.101 would be removed.

Hardwood Lumber Products

USDA is proposing to add a new definition to section 1211.101 of the November 2013 proposed referendum procedures to define the term ''hardwood lumber products'' to mean hardwood G/AD/KD lumber that has been transformed into products that remain boards meeting or exceeding the level of ''Grade 3A Common'' as defined by National Hardwood Lumber Association Rules for the Inspection of Hardwood & Cypress effective January 1, 2015 (*http://nhla.com/rulesbook*), or equivalent proprietary standard, as recommended by the Board and approved by the Secretary. The Grade 3A Common standard would provide minimum requirements for covered hardwood in terms of width, length and

other factors. This third party standard would be incorporated by reference in section 1211.101 and would specify the current version of the cited third-party standard and would include information on the availability of this standard to meet requirements for incorporation by reference. For purposes of the Order, hardwood lumber would not include industrial products which remain in board or block form such as ties, cants, crane mat material and pallet stock or products which are transformed from boards or blocks of lumber into other products such as furniture, tight cooperage, cabinetry, and constructed pallets. The term hardwood lumber products was inadvertently omitted from the November 2013 proposed referendum procedures.

Hardwood Lumber Value-Added Products

USDA is proposing to add a new definition to section 1211.101 of the November 2013 proposed referendum procedures to define the term ''hardwood lumber value-added products'' to mean products which remain in the general shape of hardwood lumber boards, but have undergone additional processing beyond surfacing or cutting to a particular size. Hardwood lumber value-added products include products such as solid wood unfinished strip flooring, all-sides surfaced boards, finger-jointed strips ripped to width, and moldings. For purposes of the proposed Order, hardwood lumber value-added products would not include industrial products which remain in board or block form such as ties, cants, crane mat material, and pallet stock or products which are transformed from boards or blocks of lumber into other products, such as furniture, tight cooperage, cabinetry, and constructed pallets. Further, it would not include multi-component or further manufactured products such as furniture, cabinets, cabinet doors, prefinished or engineered flooring, pallets, or dimension or glued components for cabinets or furniture. The term hardwood lumber value-added products was inadvertently omitted from the November 2013 referendum procedures.

Kiln Dried (KD)

USDA is proposing to add a new definition to section 1211.101 of the November 2013 proposed referendum procedures to define the term ''kiln dried (KD)'' to mean hardwood lumber that has been seasoned in a kiln by means of artificial heat, humidity and circulation. The term kiln dried was also inadvertently omitted from the November 2013 referendum procedures.

Order

USDA is also proposing an editorial change to proposed section 1211.101 (previously proposed paragraph (h)) of the November 2013 proposed referendum procedures to clarify that the Order means the Hardwood Lumber *and Hardwood Plywood* Promotion, Research and Information Order. The designation regarding paragraph (h) in section 1211.101 would be removed.

USDA is proposing to modify the referenda criteria specified in the November 2013 proposed rule in paragraphs (a) and (b) of proposed section 1211.81 to require approval by a majority of manufacturers voting in the referendum who also represent a majority of the volume represented in the referendum. It should be noted that USDA is proposing to modify the referendum criteria in the proposed Order, published separately.

Regulatory Flexibility Act Analysis

In accordance with the Regulatory Flexibility Act (RFA) (5 U.S.C. 601–612), AMS is required to examine the impact of the proposed rule on small entities. Accordingly, AMS has considered the economic impact of this action on such entities.[1]

The purpose of the RFA is to fit regulatory actions to the scale of businesses subject to such actions so that small businesses will not be disproportionately burdened. The Small Business Administration defines, in 13 CFR part 121, small agricultural producers as those having annual receipts of no more than $750,000 and small agricultural service firms (manufacturers) as those having annual receipts of no more than $7.0 million.

According to information submitted by the proponents, it is estimated that there are 2,804 hardwood lumber manufacturers and 36 hardwood plywood manufacturers in the United States annually. This number represents separate business entities and includes exempted and assessed entities under the Order; one business entity may include multiple sawmills. It is estimated that 85 to 90 percent of the manufacturers are small businesses.

In this document, USDA is proposing to amend the November 2013 proposed rule regarding referendum procedures to determine whether issuance of a proposed Order for hardwood lumber and hardwood plywood is favored by a majority of manufacturers voting in the referendum who also represent a majority of the volume represented in the referendum. USDA is reopening the comment period only with respect to specific issues identified in this proposed rule. USDA is taking the action in response to extensive comments received in response to the November 2013 proposed rule. The proposed referendum procedures are authorized under the 1996 Act.

Regarding the economic impact of the changes proposed in this supplemental notice, most of the changes are for the purpose of clarification and would have no economic impact on affected entities. The changes proposed are conforming changes to ensure definitions are the same in the proposed Order and proposed referendum procedures. The changes pertain to section 1211.101 and include: Adding definitions for the following terms—green air dried (G/AD), green (G) hardwood lumber, hardwood lumber products, hardwood lumber value-added products, and kiln dried; and clarifying the terms hardwood lumber and Order. The section was also simplified to remove the paragraph designations.

In accordance with the Paperwork Reduction Act of 1995 (44 U.S.C. Chapter 35), the referendum ballot, which represents the information collection and recordkeeping requirements that may be imposed by this rule, has been submitted to the OMB for approval.

AMS is committed to complying with the E-Government Act, to promote the use of the Internet and other information technologies to provide increased opportunities for citizen access to Government information and services, and for other purposes.

Incorporation by Reference

As previously mentioned, USDA is proposing to add a new definition to section 1211.101 of the November 2013 proposed rule to define the term ''hardwood lumber products.'' This definition would be linked to a grade standard defined in the National Hardwood Lumber Association Rules for the Inspection of Hardwood & Cypress. This standard is discussed in more detail in the Hardwood lumber products section elsewhere in this document and is available online.

While the proposal set forth below has not received the approval of USDA, it is determined that the proposed referendum procedures, and the revisions proposed herein, are consistent with and would effectuate the purposes of the 1996 Act.

[1] The complete Regulatory Flexibility Act Analysis appears in the proposed rule at 78 FR 67980.

A 30-day comment period is provided to allow interested persons to respond to this proposal. Thirty-days is deemed appropriate because this proposal supplements a November 2013 proposed rule regarding referendum procedures applicable to a proposed national promotion program for hardwood lumber and plywood. All written comments received in response to this proposed rule by the date specified will be considered prior to finalizing this action.

The entire proposed referendum procedures are published for ease of reference.

List of Subjects in 7 CFR Part 1211

Administrative practice and procedure, Advertising, Consumer information, Marketing agreements, Hardwood lumber, Hardwood plywood, Incorporation by reference, Promotion, Reporting and recordkeeping requirements.

For the reasons set forth in the preamble, it is proposed that Title 7, Chapter XI of the Code of Federal Regulations, as proposed to be amended on November 13, 2013 (78 FR 67979) and elsewhere in this issue of the **Federal Register**, be further amended as follows:

PART 1211—HARDWOOD LUMBER AND HARDWOOD PLYWOOD PROMOTION, RESEARCH AND INFORMATION ORDER

■ 1. The authority citation for 7 CFR part 1211 continues to read as follows:

Authority: 7 U.S.C. 7411–7425; 7 U.S.C. 7401.

■ 2. Subpart B of 7 CFR part 1211 is added to read as follows:

Subpart B—Referendum Procedures

Sec.

1211.100 General.
1211.101 Definitions.
1211.102 Voting.
1211.103 Instructions.
1211.104 Subagents.
1211.105 Ballots.
1211.106 Referendum report.
1211.107 Confidential information.
1211.108 OMB Control number.

Subpart B—Referendum Procedures

§ 1211.100 General.

Referenda to determine whether eligible hardwood lumber and hardwood plywood manufacturers favor the issuance, continuance, amendment, suspension, or termination of the Hardwood Lumber and Hardwood Plywood Promotion, Research and Information Order shall be conducted in accordance with this subpart.

§ 1211.101 Definitions.

For the purposes of this subpart:

Administrator means the Administrator of the Agricultural Marketing Service, with power to delegate, or any officer or employee of the U.S. Department of Agriculture to whom authority has been delegated or may hereafter be delegated to act in the Administrator's stead.

Covered hardwood means hardwood lumber, hardwood lumber products, hardwood value-added lumber products, and hardwood plywood to which an assessment has been or may be levied pursuant to the Order.

Department or USDA means the U.S. Department of Agriculture or any officer or employee of the Department to whom authority has heretofore been delegated, or to whom authority may hereafter be delegated, to act in the Secretary's stead.

Eligible hardwood lumber and hardwood plywood manufacturer means any current hardwood lumber manufacturer with annual sales of $2 million or more and current hardwood plywood manufacturers with annual sales of $10 million or more during the representative period.

Green air dried (G/AD) means green hardwood lumber or hardwood lumber that has been dried by exposure to air in a yard or shed, without artificial heat.

Green (G) hardwood lumber means hardwood lumber that has not been kiln dried or air dried.

Hardwood lumber means timber from the wood of a cypress tree or a deciduous, broad-leafed tree (including but not limited to aspen, birch, cypress, poplar, yellow poplar, maple, cherry, walnut, and oak) grown in the United States that that has been sawn into boards or blocks by a sawmill in the United States.

Hardwood lumber products means hardwood G/AD/KD lumber that has been transformed into products that remain boards meeting or exceeding the level of ''Grade 3A Common'' as defined by National Hardwood Lumber Association Rules for the Inspection of Hardwood & Cypress effective January 1, 2015 (*http://nhla.com/rulesbook*), or equivalent proprietary standard, as recommended by the Board and approved by the Secretary. For purposes of this Order, hardwood lumber does not include industrial products which remain in board or block form such as ties, cants, crane mat material, and pallet stock or products which are transformed from boards or blocks of lumber into other products such as furniture, tight cooperage, cabinetry, and constructed pallets.

(1) The following standard is incorporated by reference into this part with the approval of the Director of the Federal Register in accordance with 5 U.S.C. 552(a) and 1 CFR part 51. Any subsequent amendment to the standard by the standard-setting organization will not affect the USDA standard unless and until amended by USDA. Material is incorporated as it exists on the date of approval and a notice of any change in the material will be published in the **Federal Register**. All approved material can be obtained from National Hardwood Lumber Association, P.O. Box 34518, Memphis, TN 38184; phone (901) 377–1818; *http://www.nhla.com/.* It is available for inspection at the Promotion and Economics Division, Fruit and Vegetable Program, AMS, USDA, 1400 Independence Avenue SW., Room 1406–S, Stop 0244, Washington, DC 20250–0244; facsimile: (202) 205–2800, and is available from the sources listed below. It is also available for inspection at the National Archives and Records Administration (NARA). For information on the availability of this material at NARA, call (202) 741–6030 or go to *http://www.archives.gov/federal_register/code_of_federal_regulations/ibr_locations.html.*

(2) [Reserved]

Hardwood lumber value-added products means products which remain in the general shape of hardwood lumber boards, but have undergone additional processing beyond surfacing or cutting to a particular size. Hardwood lumber value-added products include products such as solid wood unfinished strip flooring, all-sides surfaced boards, finger-jointed strips ripped to width, and moldings. For purposes of this Order, hardwood lumber value-added products does not include industrial products which remain in board or block form such as ties, cants, crane mat material, and pallet stock or products which are transformed from boards or blocks of lumber into other products, such as furniture, tight cooperage, cabinetry, and constructed pallets. Further, it does not include multi-component or further manufactured products such as furniture, cabinets, cabinet doors, prefinished or engineered flooring, pallets, or dimension or glued components for cabinets or furniture.

Hardwood plywood means a panel product, the decorative face of which is made from hardwood veneer intended for interior use composed of an assembly of layers or plies of veneer or veneers in combination with lumber core, particleboard, medium density fiberboard core, hardboard core, or special core or special back material joined with an adhesive.

Kiln dried (KD) means hardwood lumber that has been seasoned in a kiln by means of artificial heat, humidity and circulation.

Manufacturing means the process of transforming logs into hardwood lumber, or the process of creating hardwood lumber products, value-added hardwood lumber products, or hardwood plywood.

Order means the Hardwood Lumber and Hardwood Plywood Promotion, Research and Information Order.

Person means any individual, group of individuals, partnership, corporation, association, cooperative, or any other legal entity. For the purpose of this definition, the term ''partnership'' includes, but is not limited to:

(a) A spouse who has title to, or leasehold interest in, a hardwood lumber manufacturing entity as tenants in common, joint tenants, tenants by the entirety, or, under community property laws, as community property; and

(b) So called ''joint ventures'' wherein one or more parties to an agreement, informal or otherwise, contributed land, facilities, capital, labor, management, equipment, or other services, or any variation of such contributions by two or more parties, so that it results in the manufacturing of covered hardwood lumber and the authority to transfer title to the hardwood lumber so manufactured.

Referendum agent or *agent* means the individual or individuals designated by the Secretary to conduct the referendum.

Representative period means the period designated by the Department.

United States means collectively the 50 states, the District of Columbia, the Commonwealth of Puerto Rico, and the territories and possessions of the United States.

§ 1211.102 Voting.

(a) Each eligible manufacturer of covered hardwood lumber shall be entitled to cast only one ballot in the referendum. However, each manufacturer in a landlord/tenant relationship or a divided ownership arrangement involving totally independent entities cooperating only to manufacture covered hardwood lumber, in which more than one of the parties is a manufacturer, shall be entitled to cast one ballot in the referendum covering only such manufacturer's share of ownership.

(b) Proxy voting is not authorized, but an officer or employee of an eligible corporate manufacturer, or an administrator, executor or trustee of an eligible entity may cast a ballot on behalf of such entity. Any individual so voting in a referendum shall certify that such individual is an officer or employee of the eligible entity, or an administrator, executive, or trustee of an eligible entity and that such individual has the authority to take such action. Upon request of the referendum agent, the individual shall submit adequate evidence of such authority.

(c) A single entity who manufactures covered hardwood lumber may cast one vote in the referendum.

(d) All ballots are to be cast by mail or other means, as instructed by the Department.

§ 1211.103 Instructions.

The referendum agent shall conduct the referendum, in the manner provided in this subpart, under the supervision of the Administrator. The Administrator may prescribe additional instructions, consistent with the provisions of this subpart, to govern the procedure to be followed by the referendum agent. Such agent shall:

(a) Determine the period during which ballots may be cast;

(b) Provide ballots and related material to be used in the referendum. The ballot shall provide for recording essential information, including that needed for ascertaining whether the person voting, or on whose behalf the vote is cast, is an eligible voter;

(c) Give reasonable public notice of the referendum:

(1) By using available media or public information sources, without incurring advertising expense, to publicize the dates, places, method of voting, eligibility requirements, and other pertinent information. Such sources of publicity may include, but are not limited to, print and radio; and

(2) By such other means as the agent may deem advisable.

(d) Mail to eligible manufacturers whose names and addresses are known to the referendum agent, the instructions on voting, a ballot, and a summary of the terms and conditions of the proposed Order. No person who claims to be eligible to vote shall be refused a ballot;

(e) At the end of the voting period, collect, open, number, and review the ballots and tabulate the results in the presence of an agent of a third party authorized to monitor the referendum process;

(f) Prepare a report on the referendum; and

(g) Announce the results to the public.

§ 1211.104 Subagents.

The referendum agent may appoint any individual or individuals necessary or desirable to assist the agent in performing such agent's functions of this subpart. Each individual so appointed may be authorized by the agent to perform any or all of the functions which, in the absence of such appointment, shall be performed by the agent.

§ 1211.105 Ballots.

The referendum agent and subagents shall accept all ballots cast. However, if an agent or subagent deems that a ballot should be challenged for any reason, the agent or subagent shall endorse above their signature, on the ballot, a statement to the effect that such ballot was challenged, by whom challenged, the reasons therefore, the results of any investigations made with respect thereto, and the disposition thereof. Ballots invalid under this subpart shall not be counted.

§ 1211.106 Referendum report.

Except as otherwise directed, the referendum agent shall prepare and submit to the Administrator a report on the results of the referendum, the manner in which it was conducted, the extent and kind of public notice given, and other information pertinent to the analysis of the referendum and its results.

§ 1211.107 Confidential information.

The ballots and other information or reports that reveal, or tend to reveal, the vote of any person covered under the Order and the voter list shall be strictly confidential and shall not be disclosed.

§ 1211.108 OMB control number.

The control number assigned to the information collection requirement in this subpart by the Office of Management and Budget pursuant to the Paperwork Reduction Act of 1995, 44 U.S.C. is OMB control number 0581–NEW.

Dated: June 1, 2015.

Rex A. Barnes,

Associate Administrator.

[FR Doc. 2015–13646 Filed 6–8–15; 8:45 am]

BILLING CODE 3410–02–P

DEPARTMENT OF AGRICULTURE

Agricultural Marketing Service

7 CFR Part 1211

[Document Number AMS–FV–11–0074; PR–A2]

RIN 0581–AD24

Hardwood Lumber and Hardwood Plywood Promotion, Research and Information Order

AGENCY: Agricultural Marketing Service, USDA.

ACTION: Proposed rule; supplemental notice of proposed rulemaking.

SUMMARY: The U.S. Department of Agriculture (USDA) is proposing to amend the 2013 proposed rule for a Hardwood Lumber and Hardwood Plywood Promotion, Research and Information Order (Order). In that 2013 proposed rule, USDA requested comments on a proposed industry-funded, national research and promotion program for hardwood lumber and hardwood plywood that would be administered by a board of industry members selected by the Secretary of Agriculture (Secretary). USDA is reopening the comment period only with respect to specific issues identified in this proposed rule. USDA is taking this action in response to the extensive comments received in response to that 2013 proposed rule.

DATES: Comments must be received by July 9, 2015. Pursuant to the Paperwork Reduction Act (PRA), comments on information collection issues must be received by August 10, 2015.

ADDRESSES: Interested persons are invited to submit written comments concerning this supplemental proposal. Comments may be submitted on the Internet at: *http://www.regulations.gov* or to the Promotion and Economics Division, Fruit and Vegetable Program, AMS, USDA, 1400 Independence Avenue SW., Room 1406–S, Stop 0244, Washington, DC 20250–0244; facsimile: (202) 205–2800. All comments should reference the document number and the date and page number of this issue of the **Federal Register** and will be made available for public inspection, including name and address, if provided, in the above office during regular business hours or it can be viewed at *http://www.regulations.gov.*

Pursuant to the PRA, comments concerning the information collection should also be sent to the Desk Office for Agriculture, Office of Information and Regulatory Affairs, OMB, New Executive Office Building, 725 17th Street NW., Room 725, Washington, DC 20503.

FOR FURTHER INFORMATION CONTACT: Patricia A. Petrella, Marketing Specialist, Promotion and Economics Division, Fruit and Vegetable Program, AMS, USDA, 1400 Independence Avenue SW., Room 1406, Stop 0244, Washington, DC 20250–0244; telephone: (301) 334–2891; facsimile (301) 334–2896; or electronic mail: *Patricia.Petrella@ams.usda.gov.*

SUPPLEMENTARY INFORMATION: This proposal is issued pursuant to the Commodity Promotion, Research and Information Act of 1996 (1996 Act) (7 U.S.C. 7411–7425).

As part of this rulemaking process, a proposed rule was published in the **Federal Register** on November 13, 2013 (78 FR 68298), on establishing an industry-funded promotion, research and information program for hardwood lumber and hardwood plywood. That proposal provided for a 60-day comment period which ended on January 13, 2014. On January 16, 2014, a notice was published in the **Federal Register** that reopened and extended the comment period until February 18, 2014 (79 FR 2805). A total of 939 comments were received during both comment periods.

Executive Order 12866 and Executive Order 13563

Executive Orders 12866 and 13563 direct agencies to assess all costs and benefits of available regulatory alternatives and, if regulation is necessary, to select regulatory approaches that maximize net benefits (including potential economic, environmental, public health and safety effects, distributive impacts, and equity). Executive Order 13563 emphasizes the importance of quantifying both costs and benefits, of reducing costs, of harmonizing rules, and of promoting flexibility. This rule has been designated as ''non-significant regulatory action'' under section 3(f) of Executive Order 12866. Accordingly, the Office of Management and Budget (OMB) has waived the review process.

Executive Order 13175

This action has been reviewed in accordance with the requirements of Executive Order 13175, Consultation and Coordination with Indian Tribal Governments. The review reveals that this regulation would not have substantial and direct effects on Tribal governments and would not have significant Tribal implications.

Executive Order 12988

This proposal has been reviewed under Executive Order 12988, Civil Justice Reform. It is not intended to have retroactive effect. Section 524 of the 1996 Act (7 U.S.C. 7423) provides that it shall not affect or preempt any other Federal or State law authorizing promotion or research relating to an agricultural commodity.

Under section 519 of the 1996 Act (7 U.S.C. 7418), a person subject to an order may file a written petition with USDA stating that an order, any provision of an order, or any obligation imposed in connection with an order, is not established in accordance with the law, and request a modification of an order or an exemption from an order. Any petition filed challenging an order, any provision of an order, or any obligation imposed in connection with an order, shall be filed within two years after the effective date of an order, provision, or obligation subject to challenge in the petition. The petitioner will have the opportunity for a hearing on the petition. Thereafter, USDA will issue a ruling on the petition. The 1996 Act provides that the district court of the United States for any district in which the petitioner resides or conducts business shall have the jurisdiction to review a final ruling on the petition, if the petitioner files a complaint for that purpose not later than 20 days after the date of the entry of USDA's final ruling.

Background

In June 2011, USDA received a proposal for a national research and promotion program for hardwood lumber and hardwood plywood from the Blue Ribbon Committee (BRC). The BRC is a committee of 14 hardwood lumber and hardwood plywood industry leaders representing small and large manufacturers geographically distributed throughout the United States.

The BRC proposed a program that would be financed by an assessment on hardwood lumber and hardwood plywood manufacturers and administered by a board of industry members selected by the Secretary. The purpose of the program would be to strengthen the position of hardwood lumber and hardwood plywood in the marketplace and maintain and expand markets for hardwood lumber and hardwood plywood. A referendum would be held among eligible hardwood lumber and hardwood plywood manufacturers to determine whether they favor implementation of the program prior to it going into effect.

As previously stated, a proposed rule regarding this action that was published in the **Federal Register** on November 13, 2013, provided for a 60-day comment period ending January 13, 2014. The comment period was reopened and extended an additional 30 days, or through February 18, 2014. A total of 939 comments were received during both comment periods. Many of the comments included substantive questions about fundamental provisions of the program as proposed. Some of these questions included what products would be covered, how products would be assessed, how the exemption for small manufacturers would be administered, and how the referendum would be conducted. Some of the comments provided recommendations in these different areas. Several comments also expressed concern with the overall cost of the program on manufacturers.

As a result, USDA is reopening the comment period to solicit additional comments on specific areas in the November 2013 proposal. USDA is proposing alternative language that would modify several previously proposed provisions (including adding two proposed definitions), taking into account the comments received. USDA is also asking specific questions regarding other aspects of the proposed program. This is intended to assist USDA in its further consideration of the proposal for a program. The specific areas open for comment are detailed in the section titled Scope of Supplemental Notice of Proposed Rulemaking.

Clarification Regarding Exports and Imports

In this document, USDA is clarifying that exports *would be covered* under the program. The background section of the November 2013 proposed rule (78 FR 68298) inadvertently stated that exports would be exempted from the proposed program. USDA is also reiterating that imports *would not be covered* under the program. Several commenters raised this question during the comment period in response to the November 2013 proposed rule.

In this document, USDA is also informing stakeholders of a supplemental notice of proposed rulemaking published elsewhere in this issue of the **Federal Register** to amend a separate proposed rule also published in November 2013 concerning referenda procedures related to the proposed hardwood program (November 13, 2013; 78 FR 67979).

Scope of Supplemental Notice of Proposed Rulemaking

Proposed Modifications to Previously Proposed Provisions

USDA is proposing to revise several provisions of the previously proposed Order (including adding two definitions) taking into account the comments received in response to the November 2013 proposed rule. USDA requests comments on the proposed revisions which are described in the following paragraphs.

Definitions

Green Air Dried (G/AD)

USDA is proposing to add a term to § 1211.11 to the Order detailed in the November 2013 proposed rule to define the term ''green air dried (G/AD)'' to mean green hardwood lumber or hardwood lumber that has been dried by exposure to air in a yard or shed, without artificial heat. This term is needed to address concerns raised by commenters regarding how green air dried lumber would be handled under the proposed program.

Green (G) Hardwood Lumber

USDA is proposing to modify the term ''green (G) hardwood lumber'' as defined in the November 2013 proposed rule in proposed § 1211.11 to clarify that green (G) hardwood lumber does not include kiln dried or air dried lumber. This modification is needed to address concerns raised by commenters regarding how air dried lumber would be handled under the proposed program. Thus, the term ''green (G) hardwood lumber'' would mean hardwood lumber that has not been kiln dried *or air dried.*

Hardwood Lumber

USDA is proposing to modify the term ''hardwood lumber'' as defined in the November 2013 proposed rule in proposed section 1211.12 to clarify that it includes yellow poplar in the list of trees referenced, and that the respective trees must be grown in the United States. This modification is proposed in response to comments received requesting that the term be clarified. Thus, the term hardwood lumber would mean timber from the wood of a cypress tree or a deciduous, broad leafed tree (including but not limited to aspen, birch, cypress, poplar, *yellow poplar,* maple, cherry, walnut and oak) *grown in the United States* that has been sawn into boards or blocks by a sawmill in the United States.

Hardwood Lumber Manufacturer

USDA is proposing to modify the term ''hardwood lumber manufacturer'' as defined in the November 2013 proposed rule in proposed section 1211.13 to include not only entities that kiln dry but also entities that air dry green hardwood lumber. This modification is needed to address concerns raised by commenters regarding how air dried lumber would be handled under the proposed program. Thus, the term hardwood lumber manufacturer would mean a person who cuts raw, green hardwood logs into hardwood lumber or hardwood lumber products or a person who kiln dries *or air dries* green hardwood lumber to create hardwood lumber, hardwood lumber products or hardwood lumber value-added products.

Hardwood Lumber Products

USDA is proposing to modify the term ''hardwood lumber products'' as defined in the November 2013 proposed rule in proposed § 1211.14 to link the definition to a grade standard defined in the National Hardwood Lumber Association Rules for the Inspection of Hardwood & Cypress. This definition would also be modified to exclude industrial products. This modification is being proposed in response to comments received requesting that industrial products be excluded from the proposed program and that the term be linked to a grade standard.

Thus, the term hardwood lumber products would mean hardwood G/AD/KD lumber that has been transformed into products that remain boards meeting or exceeding the level of ''Grade 3A Common'' as defined by National Hardwood Lumber Association Rules for the Inspection of Hardwood & Cypress effective January 1, 2015 (*http://nhla.com/rulesbook*), or equivalent standard, as recommended by the Board and approved by the Secretary. The Grade 3A Common standard would provide minimum requirements for covered hardwood in terms of width, length and other factors. This third party standard would be incorporated by reference, which would specify the current version of the cited third-party standard and would include information on the availability of this standard to meet requirements for incorporation by reference. For purposes of this Order, hardwood lumber would not include industrial products which remain in board or block form such as ties, cants, crane mat material and pallet stock or products which are transformed from boards or blocks of lumber into other products

such as furniture, tight cooperage, cabinetry, and constructed pallets.

Hardwood Lumber Value-Added Product Manufacturer

USDA is proposing to modify the term ''hardwood lumber value-added product manufacturer'' as defined in the November 2013 proposed rule in proposed § 1211.15 to include not only entities that kiln dry but also entities that air dry green hardwood lumber. This modification is needed to address questions raised by commenters regarding how air dried lumber would be handled under the proposed program.

Thus, the term hardwood lumber value-added product manufacturer would mean a person who operates a sawmill to manufacture hardwood lumber value-added products (the hardwood lumber may be *air dried* or kiln dried), or a person who operates a kiln to dry hardwood lumber that is then used to manufacture hardwood lumber value-added products.

Hardwood Lumber Value-Added Products

USDA is proposing to modify the term ''hardwood lumber value-added products'' as defined in the November 2013 proposed rule in proposed § 1211.16 to exclude industrial products. This modification is being proposed in response to comments received requesting that industrial products be excluded from the proposed program.

Thus, the term hardwood lumber value-added products would mean products which remain in the general shape of hardwood lumber boards, but have undergone additional processing beyond surfacing or cutting to a particular size. Hardwood lumber value-added products would include products such as solid wood unfinished strip flooring, all-sides surfaced boards, finger-jointed strips ripped to width, and moldings. For purposes of this Order, hardwood lumber value-added products would not include industrial products which remain in board or block form such as ties, cants, crane mat material, and pallet stock or products which are transformed from boards or blocks of lumber into other products, such as furniture, tight cooperage, cabinetry, and constructed pallets. Further, it would not include multi-component or further manufactured products such as furniture, cabinets, cabinet doors, prefinished or engineered flooring, pallets, or dimension or glued components for cabinets or furniture.

Manufacturer

USDA is proposing to modify the term ''manufacturer'' as defined in the November 2013 proposed rule in proposed § 1211.22 to mean any person who is engaged in the business of manufacturing covered hardwood lumber in the United States as defined in this Order. The definition as proposed in the 2013 proposed rule included the term ''domestic'' which appeared to cause some confusion regarding whether imports were covered under the proposed program. USDA is proposing to revise the definition for the purpose of clarity.

Sale

USDA is proposing to modify the term ''sale'' as defined in the November 2013 proposed rule in proposed section 1211.31 to address questions posed regarding whether the proposed program was assessing the commodity at the appropriate point in production. The definition as proposed in the November 2013 proposed rule linked a sale to the dollar value of covered hardwood purchased rather than the dollar value of covered hardwood sold. USDA is proposing to modify this definition based on comments received.

Thus, the term sale for purposes of calculating assessments, would mean the total dollar *value* of hardwood lumber, hardwood lumber products, hardwood lumber value-added products, or hardwood plywood that are *sold* from a hardwood lumber manufacturer or hardwood plywood manufacturer. Sales, for purposes of the assessment, would not include freight or discounts, and brokered sales would not be included within the meaning of the sale.

Hardwood Lumber and Hardwood Plywood Promotion, Research and Information Board

Nominations and Appointments

USDA is proposing to modify the initial nomination procedures for the first Board as specified in the November 2013 proposed rule in proposed paragraph (a) of § 1211.42. The November 2013 proposed rule provides that the BRC solicit potential nominees and submit the nominations to the Secretary. Some commenters noted the importance of trying to ensure that the nomination process is highly publicized so that interested persons are aware of the process. In response, USDA is proposing to modify this section to require the BRC and USDA to work together to publicize the nomination process so that eligible candidates are aware of the opportunity to serve on the Board.

Assessments

USDA is proposing to modify portions of the assessment provisions as specified in the November 2013 proposed rule. Specifically, paragraph (a) of § 1211.52 regarding assessments would be revised to clarify that assessments would be applicable to hardwood plywood and hardwood lumber, both in its green (rough) form and as it is kiln dried *or air dried* to create hardwood lumber products and hardwood lumber value-added products. The reference to air dried was omitted in the November 2013 proposed rule. This modification is needed to address questions raised by commenters regarding how air dried lumber would be handled under the proposed program.

USDA is also proposing to modify paragraph (b) of § 1211.52 as specified in the November 2013 proposed rule in an effort to clarify how covered hardwood would be assessed under the program. USDA received many comments during the comment period with regard to the assessment section. Many commenters opined that the calculations were complicated and may not be workable.

USDA is proposing to simplify the table used as an illustration in § 1211.52(b) by omitting references to descriptions of products and using instead the terms defined in the proposed program. The table would read as follows:

Covered hardwood	Assessment rate	Allowable deductions [1]
Hardwood lumber	$1/$1,000 in sales	N/A.
Hardwood lumber products	$1/$1,000 in sales	—dollar value of green hardwood lumber purchases.

Covered hardwood	Assessment rate	Allowable deductions [1]
Hardwood lumber value-added products	$0.75/$1,000 in sales of value-added products plus $1.00 per $1,000 in sales of green (G/AD/KD) hardwood lumber.	—dollar value of green hardwood lumber purchases.
Hardwood plywood	$3/$1,000 in sales	N/A.

[1] The deductions are necessary to take into account assessments already paid on green (G/AD/KD) hardwood lumber purchased by the manufacturer to make the product or value-added product.

The table would also be revised to clarify that the assessment rate for hardwood lumber value-added products includes $0.75 per $1,000 in sales of value added products, *plus $1.00 per $1,000 in sales of green (G/AD/KD) hardwood lumber,* minus the dollar value of the green (G/AD/KD) hardwood lumber purchases used to make the products.

USDA is also proposing to clarify the remainder of § 1211.52(b) that explains in narrative form how the assessments are computed depending on the type of covered hardwood. The proposed paragraphs would read as follows:

(1) Hardwood lumber manufacturers that cut raw, green hardwood logs into hardwood lumber or kiln dry or air dry hardwood lumber that can be further processed into products would pay at the rate of $1.00 per $1,000 in sales of green (G/AD/KD) hardwood lumber;

(2) Hardwood lumber manufacturers that manufacture hardwood lumber products would pay at a rate of $1.00 per $1,000 in sales of hardwood lumber products minus the dollar value of green (G/AD/KD) hardwood lumber purchases;

(3) Hardwood lumber value-added product manufacturers would pay a rate of $0.75 per $1,000 in sales of hardwood lumber value-added products, plus $1.00 per $1,000 in sales of green (G/AD/KD) hardwood lumber, minus the dollar value of the green hardwood lumber purchases (G/AD/KD); and

(4) Hardwood plywood manufacturers would pay at the rate of $3.00 per $1,000 in sales of hardwood plywood lumber.

(5) Brokered sales of hardwood lumber or hardwood lumber products would be excluded from the calculation of assessments.

(6) Vertically integrated manufacturers that manufacture hardwood lumber, then transfer the lumber from one business unit to another within the same company to manufacture non-assessed product, would pay assessments based on the fair market value of the non-assessed product, minus the fair market value of the green (G/AD/KD) hardwood lumber, minus the fair market value of the green (G/AD/KD) hardwood lumber purchases times $0.001. This formula is necessary to ensure that covered hardwood lumber in a vertically integrated company is appropriately assessed.

Exemptions From Assessment

USDA is proposing to modify § 1211.53 of the November 2013 proposed rule pertaining to exemptions from assessment. Paragraph (b) of that section requires manufacturers who meet the exemption threshold to apply to the Board for an exemption certificate every year. Commenters raised concerns with the burden of this on small companies. Thus, USDA is proposing to revise this paragraph so that the exemption certificates issued by the Board remain valid for as long as the annual sales of the respective manufacturers remain below the exemption threshold. Paragraph (b) in § 1211.53 is proposed to be modified accordingly. It should be noted that even with this modification to § 1211.53, exempt manufacturers would still be required to keep records pursuant to § 1211.71.

Organic Exemption From Assessment

Section 1211.53(e) as proposed in the November 2013 proposed rule stated that to be eligible for an organic exemption, a hardwood lumber or hardwood plywood manufacturer who operated under a National Organic Program (NOP) (7 CFR part 205) system plan, could only manufacture and have annual sales of covered hardwood lumber eligible to be labeled as 100 percent organic under the NOP and could not be a split operation.

This limitation was based on legislative authority in section 501 of the Federal Agriculture Improvement and Reform Act of 1996 (FAIR Act) (7 U.S.C. 7401), which established certain provisions for generic commodity promotion programs created under the various commodity promotion laws. Section 501 of the FAIR Act was previously amended in May 2002, by section 10607 of the Farm Security and Rural Investment Act (2002 Farm Bill) (Pub. L. 107–171) to exempt persons that produced and marketed solely 100 percent organic products, and who did not otherwise produce or market any conventional or nonorganic products, from the payment of an assessment for commodity promotion activities under a commodity promotion law.

However, section 10004 of the Agricultural Act of 2014 (2014 Farm Bill) (Pub. L. 113–79) subsequently expanded the organic assessment exemption to apply to any agricultural commodity that is certified as ''organic'' or ''100 percent organic'' as defined by NOP regardless of whether the person requesting the exemption also produces, handles, markets, or imports conventional or nonorganic products.

USDA is proposing to modify § 1211.53(e) so that it is consistent with the FAIR Act as amended by the 2014 Farm Bill. The exemption would then allow manufacturers of ''organic'' and ''100 percent organic'' hardwood lumber certified under NOP, regardless of whether the person requesting the exemption also produces, handles, markets, or imports conventional or nonorganic products, to be eligible for an exemption from assessments.

Miscellaneous

Referenda

USDA is proposing to modify the referenda criteria as specified in the November 2013 proposed rule in paragraphs (a) and (b) of proposed § 1211.81 to require approval by a majority of manufacturers voting in the referendum who also represent a majority of the volume (board foot or equivalent) of covered hardwood, represented in the referendum and by those who, during a representative period determined by the Secretary, were engaged in the manufacturing of covered hardwood. Only manufacturers who would pay or paid assessments under the program (those with annual sales over the respective exemption threshold) would be eligible to vote in referenda.

USDA is proposing this modification in response to the many comments received regarding the criteria proposed in the November 2013 proposed rule. That rule proposed approval by a majority of the volume of covered

hardwood represented in the referendum. Several commenters expressed concern that this voting criteria favored large manufacturers and disadvantaged small companies.

Suspension and Termination

USDA is also proposing to modify the paragraph (b) of § 1211.82 as specified in the November 2013 proposed rule regarding suspension and termination to mirror the proposed change to § 1211.81 regarding referenda. Section 1211.82(b) as proposed in the November 2013 proposed rule would require the Secretary to suspend or terminate the proposed program at the end of a fiscal period based on a majority of the volume (board foot equivalent) of covered hardwood represented in a referendum by those who, during a representative period determined by the Secretary, were engaged in the manufacturing of covered hardwood.

USDA is proposing to revise § 1211.82(b) to require the Secretary to suspend or terminate the program if suspension or termination is favored by a majority of manufacturers voting in a referendum who represent a majority of the volume (board foot or equivalent) represented in the referendum, and who, during a representative period determined by the Secretary, were engaged in the manufacturing of covered hardwood. As explained in the section above titled Referenda, USDA is proposing this change in response to several comments received regarding the referenda criteria.

Questions Regarding Other Aspects of the Proposed Program

USDA received numerous comments in response to the November 2013 proposed rule that raised other substantive issues with regard to the proposed program. To address these issues, USDA is posing the following questions for comment. Responses should cite the number and subsection of the question being answered. USDA requests that commenters provide specific data, statistics, or any other evidence as appropriate upon which those comments are based.

1. Hardwood Plywood

Several comments questioned the inclusion of hardwood plywood in the proposed program. Commenters opined that hardwood plywood competes with hardwood lumber, and that plywood is too different to include in the program. As USDA continues to evaluate the merits of including hardwood plywood in the proposed program, USDA seeks comments on the following questions:

a. What are the benefits and the drawbacks for including hardwood lumber and hardwood plywood together in the same research and promotion program?

b. How would the proposed program benefit the hardwood plywood sector of the industry?

c. What types of promotion programs could be envisioned by the industry for hardwood plywood and how would this impact the hardwood lumber sector of the industry?

d. What impact would excluding hardwood plywood have on the expected amount of assessments to be collected under the proposed program?

e. What impact would excluding hardwood plywood have on the proposed Board structure?

2. Assessments

As previously mentioned, several comments were received regarding the proposed assessment section. USDA has clarified the section in this supplemental proposed rule, but also seeks comments on the following questions:

a. Should the assessment computation be revised? If so, how should it be revised and what would be the impact on the projected amount of assessments to be collected under the proposed program?

b. Should the proposed rates of assessment on any of the four types of covered hardwood be revised? If so, to what level and what would be the impact on the projected amount of assessments to be collected under the proposed program?

Proposed Editorial Changes

The proposed regulatory text contained in this document includes other changes to make the proposed program's provisions more clear and improve readability. The editorial changes are summarized in Table 1 below.

TABLE 1—PROPOSED EDITORIAL CHANGES

Description in revised regulatory text (proposed section)	Proposed revision	Explanation
1211.9	Add the words ''recommended by the Board'' after the word ''source''.	Clarify that the Board would recommend a source to the Secretary for fair market value.
1211.10	Add the word ''fiscal'' before the word ''year''	Clarify that the terms ''fiscal period'' and ''fiscal year'' have the same meaning.
1211.20	Add the abbreviation ''KD'' to the term kiln dried	Clarify that KD, a common abbreviation used in the industry, means kiln dried.
1211.41(e)(1) and (2).	Substitute the term ''manufactured'' for the term ''produced'' and omit the phrase ''within the United States''.	Clarify that when the Board reviews data every 5-years to assess whether changes are necessary to the Board's structure to ensure it continues to reflect the geographic distribution of covered hardwood, the Board's review is on covered hardwood manufactured, and that the review is not limited to sales within the United States.
1211.42(a) and (b)(1).	Change the phrase ''nominees must have annual sales of more than $2 million of covered hardwood lumber or have annual sales of more than $10 million of hardwood plywood per fiscal year'' to ''nominees must have annual sales of $2 million or more of hardwood lumber, hardwood products, and hardwood value-added products, or have annual sales of $10 million or more of hardwood plywood per fiscal year''.	Clarify the eligibility requirements for Board membership.

TABLE 1—PROPOSED EDITORIAL CHANGES—Continued

Description in revised regulatory text (proposed section)	Proposed revision	Explanation
1211.53(d)	Change the phrase "Hardwood lumber manufacturers who received an exemption certificate from the Board but have annual sales of more than $2 million or hardwood plywood manufacturers that have annual sales of more than $10 million during the fiscal year" to "Hardwood lumber manufacturers who received an exemption certificate from the Board but have annual sales of $2 million or more or hardwood plywood manufacturers that have annual sales of $10 million or more during the fiscal year".	Clarify the exemption thresholds under the proposed program.
1211.81(b)	Change the penultimate sentence from "The Secretary will also conduct a referendum if requested by the Board or by 10 percent or more of all non-exempt manufacturers paying an assessment" to "The Secretary will also conduct a referendum if requested by the Board or if requested by 10 percent or more of all manufacturers eligible to vote in a referendum".	Clarify when the Secretary must conduct a referendum under the proposed program.

Regulatory Flexibility Act Analysis

In accordance with the Regulatory Flexibility Act (RFA) (5 U.S.C. 601–612), AMS is required to examine the impact of the proposed rule on small entities. Accordingly, AMS has considered the economic impact of this action on such entities.[1]

The purpose of the RFA is to fit regulatory actions to the scale of businesses subject to such actions so that small businesses will not be disproportionately burdened. The Small Business Administration defines, in 13 CFR part 121, small agricultural producers as those having annual receipts of no more than $750,000 and small agricultural service firms (manufacturers) as those having annual receipts of no more than $7.0 million. According to information submitted by the proponents, it is estimated that there are 2,804 hardwood lumber manufacturers and 36 hardwood plywood manufacturers in the United States. This number represents separate business entities and includes exempted and assessed entities under the Order; one business entity may include multiple sawmills. It is estimated that 85 to 90 percent of the manufacturers are small businesses.

In this document, USDA is proposing to amend the November 2013 proposed rule for a national research and promotion program for hardwood lumber and hardwood plywood. In that 2013 proposed rule, USDA requested comments on a proposed industry-funded Order for hardwood lumber and hardwood plywood that would be administered by a board of industry members selected by the Secretary. USDA is reopening the comment period only with respect to specific issues identified in this proposed rule. USDA is taking this action in response to the extensive comments received in response to that November 2013 proposed rule. The proposed program is authorized under the 1996 Act.

Regarding the economic impact of the changes proposed in this supplemental notice, most of the changes are for the purpose of clarification and would have no economic impact on affected entities. These changes include the following: Adding a new term to § 1211.11 to define the term green air dried; clarifying the following terms—green (G) hardwood lumber (§ 1211.11), hardwood lumber (§ 1211.12), hardwood lumber manufacturer (§ 1211.13), hardwood lumber products, including an incorporation by reference (§ 1211.14), hardwood lumber value-added product manufacturer (§ 1211.15), manufacturer (§ 1211.22), and sale (§ 1211.31); modifying the initial nomination process to help ensure the process is appropriately publicized (§ 1211.42); clarifying the assessment section (§ 1211.52); modifying the organic exemption so that it is consistent with the FAIR Act as amended by the 2014 Farm Bill (§ 1211.53(e)), and making the proposed editorial changes as previously specified in Table 1 of this document. The proposed change to the referenda criteria in § 1211.81 to require approval by a majority of those voting and by a majority of the volume represented in a referendum would also have no economic impact on affected entities.

Proposed changes to three of the sections detailed in this supplemental notice would have some economic impact on the proposed program. Excluding industrial products from the terms hardwood lumber products in § 1211.14 and hardwood lumber value-added product manufacturer in § 1211.15 would likely reduce the amount of assessments collected under the program. We do not have information regarding to what extent assessments would be reduced or whether the number of entities covered under the proposed program would be reduced. Comments providing any information of the impact of this change on the amount of assessments anticipated under the proposed program or the number of entities expected to be covered under the program are requested.

The third proposed change that would have an economic impact on the proposed program concerns § 1211.53(b) regarding requirements for small manufacturers. USDA received many comments during the comment period regarding potential effects on small companies. Several commenters expressed concern that the proposed program would increase their costs and that the program would be burdensome to their businesses.

In response to these comments, USDA is proposing to reduce the information collection requirements on small manufacturers. As previously mentioned in this document, § 1211.53(b) of the November 2013 proposed rule would require small manufacturers who meet the exemption threshold to apply to the Board annually for an exemption certificate. Commenters argued that this would be very burdensome on small companies. Thus, USDA is proposing to revise the

[1] The complete Regulatory Flexibility Act Analysis appears in the proposed rule at 78 FR 68307 (Nov. 13, 2013).

November 2013 proposed rule so that certificates of exemption issued by the Board remain valid for as long as the annual sales of the respective manufacturers remain below the exemption thresholds. USDA is proposing to revise § 1211.53(b) accordingly, and is also proposing to revise the related reporting burden requirements as detailed in the section below titled Paperwork Reduction Act.

Paperwork Reduction Act

In accordance with the PRA of 1995 (44 U.S.C. Chapter 35), in the November 2013 proposed rule, AMS announced its intention to request approval of new information collection and recordkeeping requirements for the proposed hardwood lumber and hardwood plywood program. In this proposal, AMS requests comments on proposed revisions to the information collection requirements contained in the November 2013 proposed rule.

Title: Hardwood Lumber and Hardwood Plywood Promotion, Research and Information Order.

OMB Number: 0581–NEW.

Expiration Date of Approval: 3 years from approval date.

Type of Request: Proposed revisions to a new information collection for research and promotion programs.

Abstract: AMS is proposing to amend the November 2013 proposed rule for a national research and promotion program for hardwood lumber and hardwood plywood that would reduce the information collection requirements under the proposed program. AMS is taking this action in response to comments received in response to the November 2013 proposed rule. The information collection requirements in the request are essential to carry out the intent of the 1996 Act.

In the 2013 proposed rule, AMS proposed that manufacturers of hardwood lumber, hardwood products, and hardwood value-added products with annual sales of less than $2 million, and hardwood plywood manufacturers with annual sales of less than $10 million could submit a written request to the Board for an exemption from paying assessments. The request would be made on the form ''Application for Exemption from Assessments.''

As mentioned previously, the November 2013 proposed rule stated that manufacturers would need to submit this form every year to the Board. Based on comments received, AMS is proposing to revise this requirement so that companies with annual sales under the exemption thresholds need only submit this form once to the Board.

Information collection requirements that are included in this proposal include:

Application for Exemption From Assessments

Estimate of Burden: Public reporting burden for this collection of information is estimated to average 0.25 hour per manufacturer reporting on covered hardwood sold. Upon approval of an application, manufacturers would receive an exemption certification.

Respondents: Hardwood lumber manufacturers and hardwood plywood manufacturers who have annual sales of less than $2 million or less than $10 million, respectively.

Estimated Number of Respondents: 497 (1,490 for the first year, 0 for the second year and potentially 2 annually thereafter).

Estimated Number of Responses per Respondent: 0.10 (1 every 10 years).

Estimated Total Annual Burden on Respondents: 124 (372 hours for the first year, 0 hours for the second year and potentially 1 hour thereafter).

Comments concerning the revised information collection requirements contained in this action should reference OMB No. 0581–NEW. In addition, the document number of this issue of the **Federal Register** should also be referenced. Comments should be sent to the same addresses referenced in the **ADDRESSES** section of this proposed rule.

As with all Federal promotion programs, reports and forms are periodically reviewed to reduce information requirements and duplication by industry and public sector agencies. Finally, USDA has not identified any relevant Federal rules that duplicate, overlap, or conflict with this proposed rule.

AMS is committed to complying with the E-Government Act, to promote the use of the Internet and other information technologies to provide increased opportunities for citizen access to Government information and services, and for other purposes.

Comments are invited on: (a) Whether the proposed collection of information is necessary for the proper performance of functions of the proposed Order and USDA's oversight of the proposed Order, including whether the information would have practical utility; (b) the accuracy of USDA's estimate of the burden of the proposed collection of information including the validity of the methodology and assumptions used; (c) ways to enhance the quality, utility, and clarity of the information to be collected; and (d) ways to minimize the burden of the collection of information on those who are to respond, including the use of appropriate automated, electronic, mechanical, or other technological collection techniques or other forms of information technology.

Incorporation by Reference

USDA is proposing to modify the term ''hardwood lumber products'' as defined in the November 2013 proposed rule in proposed section 1211.14 to link the definition to a grade standard defined in the National Hardwood Lumber Association Rules for the Inspection of Hardwood & Cypress. The standard ''Grade 3A Common,'' effective January 1, 2015, was discussed in greater detail in the section-by-section analysis. The standard can be obtained from the National Hardwood Lumber Association, PO Box 34518, Memphis, TN 38184; phone (901) 377–1818; *http://www.nhla.com/* and inspected at the Promotion and Economics Division, Fruit and Vegetable Program, AMS, USDA, 1400 Independence Avenue SW., Room 1406–S, Stop 0244, Washington, DC 20250–0244; facsimile: (202) 205–2800.

While the proposal set forth below has not received the approval of USDA, it is determined that the proposed Order, and the revisions proposed herein, is consistent with and would effectuate the purposes of the 1996 Act.

A 30-day comment period is provided to allow interested persons to respond to this proposal. Thirty-days is deemed appropriate because this proposal supplements a November 2013 proposed rule for a national promotion program for hardwood lumber and plywood. All written comments received in response to this proposed rule by the date specified will be considered prior to finalizing this action.

The entire proposed Order is published for ease of reference.

List of Subjects in 7 CFR Part 1211

Administrative practice and procedure, Advertising, Consumer information, Incorporation by reference, Marketing agreements, Hardwood lumber promotion, Hardwood plywood promotion, Reporting and recordkeeping requirements.

For the reasons set forth in the preamble, it is proposed that title 7, chapter XI of the Code of Federal Regulations as proposed to be added on November 13, 2013 (78 FR 68298), be amended as follows:

PART 1211—HARDWOOD LUMBER AND HARDWOOD PLYWOOD PROMOTION, RESEARCH AND INFORMATION ORDER

Subpart A—Hardwood Lumber and Hardwood Plywood Promotion, Research and Information Order

Definitions

Sec.
1211.1 Act.
1211.2 Blue Ribbon Committee.
1211.3 Board.
1211.4 Brokered sale.
1211.5 Concentration yard.
1211.6 Conflict of interest.
1211.7 Covered hardwood.
1211.8 Department or USDA.
1211.9 Fair market value.
1211.10 Fiscal period or fiscal year.
1211.11 Green air dried (G/AD) and Green (G) hardwood lumber.
1211.12 Hardwood lumber.
1211.13 Hardwood lumber manufacturer.
1211.14 Hardwood lumber products.
1211.15 Hardwood lumber value-added product manufacturer.
1211.16 Hardwood lumber value-added products.
1211.17 Hardwood plywood.
1211.18 Hardwood plywood manufacturer.
1211.19 Information.
1211.20 Kiln dried.
1211.21 Market or marketing.
1211.22 Manufacturer.
1211.23 Manufacturing.
1211.24 Member.
1211.25 Order.
1211.26 Part and subpart.
1211.27 Person.
1211.28 Programs, plans and projects.
1211.29 Promotion.
1211.30 Research.
1211.31 Sale.
1211.32 Secretary.
1211.33 State.
1211.34 Suspend.
1211.35 Terminate.
1211.36 Transfer.
1211.37 United States.

Hardwood Lumber and Hardwood Plywood Promotion, Research and Information Board

1211.41 Establishment and membership.
1211.42 Nominations and appointments.
1211.43 Term of office.
1211.44 Removal and vacancies.
1211.45 Procedure.
1211.46 Reimbursement and attendance.
1211.47 Powers and duties of the Board.
1211.48 Prohibited activities.

Expenses and Assessments

1211.50 Budget and expenses.
1211.51 Financial statements.

Assessments

1211.52 Assessments.
1211.53 Exemption from assessment.

Promotion, Research and Information

1211.60 Programs, plans, and projects.
1211.61 Independent evaluation.
1211.62 Patents, copyrights, trademarks, information, publications, and product formulations.

Reports, Books and Records

1211.70 Reports.
1211.71 Books and records.
1211.72 Confidentiality of information.

Miscellaneous

1211.80 Right of the Secretary.
1211.81 Referenda.
1211.82 Suspension and termination.
1211.83 Proceedings after termination.
1211.84 Effect of termination or amendment.
1211.85 Personal liability.
1211.86 Separability.
1211.87 Amendments.
1211.88 OMB control number.

Authority: 7 U.S.C. 7411–7425, 7 U.S.C. 7401.

Subpart A—Hardwood Lumber and Hardwood Plywood Promotion, Research and Information Order

§ 1211.1 Act.

Act means the Commodity Promotion, Research and Information Act of 1996 (7 U.S.C. 7411–7425), and any amendments thereto.

§ 1211.2 Blue Ribbon Committee.

Blue Ribbon Committee means the 14-member committee representing businesses that manufacture hardwood lumber, hardwood lumber products, hardwood lumber value-added products and hardwood plywood in the United States formed to pursue an industry promotion, research and information program.

§ 1211.3 Board.

Board or Hardwood Lumber and Hardwood Plywood Promotion, Research and Information Board means the administrative body established pursuant to this Part. It may be referred to by such other name as the Board recommends and the Secretary approves.

§ 1211.4 Brokered sale.

Brokered sale is a sale in which product is purchased from a person and resold to a different person without taking physical possession of the product.

§ 1211.5 Concentration yard.

Concentration yard means an operation with kilns that purchases hardwood lumber from sawmills, or wholesalers by means of a brokered sale, and may grade, sort, dry and/or surface the hardwood lumber. It excludes distribution yards that do not have kilns.

§ 1211.6 Conflict of interest.

Conflict of interest means a situation in which a member or employee of the Board has a direct or indirect financial interest in an entity that performs a service for, or enters into a contract with, the Board for anything of economic value.

§ 1211.7 Covered hardwood.

Covered hardwood means hardwood lumber, hardwood lumber products, hardwood lumber value-added lumber products, and hardwood plywood to which an assessment has been or may be levied pursuant to the Order.

§ 1211.8 Department or USDA.

Department or USDA means the United States Department of Agriculture or any officer or employee of the Department to whom authority has been delegated, or to whom authority may hereafter be delegated, to act for the Secretary.

§ 1211.9 Fair market value.

Fair market value means, with respect to covered hardwood, the value of the hardwood lumber as determined by a source recommended by the Board and approved by the Secretary.

§ 1211.10 Fiscal period or fiscal year.

Fiscal period or fiscal year means a calendar year from January 1 through December 31, or such other period as recommended by the Board and approved by the Secretary.

§ 1211.11 Green air dried (G/AD) and Green (G) hardwood lumber.

Greed air dried (G/AD) means green hardwood lumber or hardwood lumber that has been dried by exposure to air in a yard or shed, without artificial heat.

Green (G) hardwood lumber means hardwood lumber that has not been kiln dried or air dried.

§ 1211.12 Hardwood lumber.

Hardwood lumber means timber from the wood of a cypress tree or a deciduous, broad-leafed tree (including but not limited to aspen, birch, cypress, poplar, yellow poplar, maple, cherry, walnut and oak) grown in the United States that has been sawn into boards or blocks by a sawmill in the United States.

§ 1211.13 Hardwood lumber manufacturer.

Hardwood lumber manufacturer means a person who cuts raw, green hardwood logs into hardwood lumber or hardwood lumber products or a person who kiln dries or air dries green hardwood lumber to create hardwood lumber, hardwood lumber products or hardwood lumber value-added products.

§ 1211.14 Hardwood lumber products.

Hardwood lumber products means hardwood G/AD/KD lumber that has

been transformed into products that remain boards meeting or exceeding the level of ''Grade 3A Common'' in the Rules for the Inspection of Hardwood & Cypress, effective January 1, 2015 (*http://nhla.com/rulesbook*), or equivalent proprietary standard, as recommended by the Board and approved by the Secretary. For purposes of this Order, hardwood lumber does not include industrial products which remain in board or block form such as ties, cants, crane mat material, and pallet stock or products which are transformed from boards or blocks of lumber into other products such as furniture, tight cooperage, cabinetry, and constructed pallets. ''Grade 3A Common,'' Rules for the Inspection of Hardwood & Cypress, effective January 1, 2015, is incorporated by reference into this section with the approval of the Director of the Federal Register under 5 U.S.C. 552(a) and 1 CFR part 51. To enforce any edition other than that specified in this section, USDA must publish notice of change in the **Federal Register** and the material must be available to the public. All approved material is available for inspection at the Promotion and Economics Division, Fruit and Vegetable Program, AMS, USDA, 1400 Independence Avenue SW., Room 1406–S, Stop 0244, Washington, DC 20250–0244; facsimile: (202) 205–2800, and is available from National Hardwood Lumber Association, P.O. Box 34518, Memphis, TN 38184; phone (901) 377–1818; *http://www.nhla.com/*. It is also available for inspection at the National Archives and Records Administration (NARA). For information on the availability of this material at NARA, call (202) 741–6030 or go to *http://www.archives.gov/federal_register/code_of_federal_regulations/ibr_locations.html*.

§ 1211.15 Hardwood lumber value-added product manufacturer.

Hardwood lumber value-added product manufacturer means a person who operates a sawmill to manufacture hardwood lumber value-added products (the hardwood lumber may be air dried or kiln dried), or a person who operates a kiln to dry hardwood lumber that is then used to manufacture hardwood lumber value-added products.

§ 1211.16 Hardwood lumber value-added products.

Hardwood lumber value-added products means products which remain in the general shape of hardwood lumber boards, but have undergone additional processing beyond surfacing or cutting to a particular size. Hardwood lumber value-added products include products such as solid wood unfinished strip flooring, all-sides surfaced boards, finger-jointed strips ripped to width, and moldings. For purposes of this Order, hardwood lumber value-added products does not include industrial products which remain in board or block form such as ties, cants, crane mat material, and pallet stock or products which are transformed from boards or blocks of lumber into other products, such as furniture, tight cooperage, cabinetry, and constructed pallets. Further, it does not include multi-component or further manufactured products such as furniture, cabinets, cabinet doors, prefinished or engineered flooring, pallets, or dimension or glued components for cabinets or furniture.

§ 1211.17 Hardwood plywood.

Hardwood plywood means a panel product, the decorative face of which is made from hardwood veneer intended for interior use composed of an assembly of layers or plies of veneer or veneers in combination with lumber core, particleboard, medium density fiberboard core, hardboard core, or special core or special back material joined with an adhesive.

§ 1211.18 Hardwood plywood manufacturer.

Hardwood plywood manufacturer means a person who utilizes hardwood logs, veneer, or lumber to create hardwood plywood.

§ 1211.19 Information.

Information means activities and programs that are designed to develop new markets, marketing strategies, increase market efficiency, and activities that are designed to enhance the image of hardwood lumber, hardwood lumber products, hardwood lumber value-added products, and hardwood plywood and the forests from which it comes in the United States. These include:

(a) *Consumer information,* which means any action taken to provide information to the general public regarding the harvesting, consumption, use, and care of covered hardwood; and

(b) *Industry information,* which means any action taken to provide information and programs that will lead to the development of new markets, new marketing strategies, or increased efficiency for covered hardwood, and activities to enhance the image of the hardwood lumber, hardwood lumber products, hardwood lumber value-added products, and hardwood plywood industries.

§ 1211.20 Kiln dried (KD).

Kiln dried (KD) means hardwood lumber that has been seasoned in a kiln by means of artificial heat, humidity and circulation.

§ 1211.21 Market or marketing.

Marketing means the sale or other disposition of covered hardwood in any channel of commerce. To *market* means to sell or otherwise dispose of covered hardwood in any channel of commerce.

§ 1211.22 Manufacturer.

Manufacturer means any person who is engaged in the business of manufacturing covered hardwood lumber in the United States as defined in this Order.

§ 1211.23 Manufacturing.

Manufacturing means the process of transforming logs into hardwood lumber, or the process of creating hardwood lumber products, hardwood lumber value-added products, or hardwood plywood.

§ 1211.24 Member.

Member means a member appointed by the Secretary to the Hardwood Lumber and Hardwood Plywood Promotion, Research and Information Board.

§ 1211.25 Order.

Order means an order issued by the Secretary under section 514 of the Act that provides for a program of generic promotion, research and information of covered hardwood under the Act.

§ 1211.26 Part and subpart.

Part means the Hardwood Lumber and Hardwood Plywood Promotion, Research and Information Order and all rules, regulations, and supplemental orders issued pursuant to the Act and the Order. The order shall be a *subpart* of such part.

§ 1211.27 Person.

Person means any individual, group of individuals, partnership, corporation, association, joint stock company, cooperative, or any other legal entity.

§ 1211.28 Programs, plans and projects.

Programs, plans and projects mean those research, promotion and information programs, plans, or projects established pursuant to this Order.

§ 1211.29 Promotion.

Promotion means any action taken to present a favorable image of hardwood lumber, hardwood lumber products, hardwood lumber value-added products, and hardwood plywood to the general public and to any and all

consumers and those who influence consumption of covered hardwood lumber with the intent of improving the perception, markets and competitive position of covered hardwood lumber and stimulating sales of covered hardwood lumber.

§ 1211.30 Research.

Research means any type of test, study, or analysis designed to advance the knowledge, image, desirability, use, marketability, production, product development, or quality of covered hardwood. The term research includes the communication of the results of any research conducted under this Part.

§ 1211.31 Sale.

For purposes of calculating the assessment, provided for in section 1211.52, a *sale* means the total dollar value of hardwood lumber, hardwood lumber products, hardwood lumber value-added products, or hardwood plywood that are sold from a hardwood lumber manufacturer or hardwood plywood manufacturer. Sales, for purposes of the assessment, do not include freight or discounts. Brokered sales are not included within the meaning of sale.

§ 1211.32 Secretary.

Secretary means the Secretary of Agriculture of the United States or any officer or employee of the Secretary to whom the Secretary has delegated the authority to act on behalf of the Secretary.

§ 1211.33 State.

State means any of the several 50 States of the United States, the District of Columbia, the Commonwealth of Puerto Rico, and the territories and possessions of the United States.

§ 1211.33 Suspend.

Suspend means to issue a rule under section 553 of title 5 U.S.C., to temporarily prevent the operation of an order or part thereof during a particular period of time specified in the rule.

§ 1211.34 Terminate.

Terminate means to issue a rule under section 553 of title 5 U.S.C., to cancel permanently the operation of an order or part thereof beginning on a date specified in the rule.

§ 1211.35 Transfer.

Transfer means when a vertically integrated manufacturing plant in which post-manufacturing operations turn an assessed hardwood product (covered hardwood) into a non-assessed product while remaining under the control of the same person.

§ 1211.36 United States or U.S.

United States or U.S. means collectively the 50 states, the District of Columbia, the Commonwealth of Puerto Rico, and the territories and possessions of the United States.

Hardwood Lumber and Hardwood Plywood Promotion, Research and Information Board

§ 1211.41 Establishment and membership.

(a) There is hereby established a Hardwood Lumber and Hardwood Plywood Promotion, Research and Information Board composed of 28 members who are either owners or employees of hardwood lumber manufacturers or hardwood plywood manufacturers who are appointed by the Secretary. Of the 28 members, 22 shall be hardwood lumber manufacturers, one shall be a hardwood lumber value-added manufacturer who manufactures flooring products, and five shall be hardwood plywood manufacturers.

(b) The five members designated for hardwood plywood manufacturers shall be appointed as follows:

(1) Three members shall be from the States that are west of the Mississippi River; and

(2) Two members shall be from the States that are east of the Mississippi River.

(c) The one member designated as a hardwood lumber value-added products manufacturer of covered hardwood flooring products shall be appointed from nominees from any State within the United States.

(d) The remaining 22 members designated as hardwood lumber manufacturers, (exclusive of the hardwood flooring manufacturer) shall be apportioned as follows:

(1) Six members from District 1, which consists of the States of Connecticut, Delaware, Maine, Maryland, Massachusetts, New Hampshire, New Jersey, New York, Pennsylvania, Rhode Island, Vermont, and West Virginia and the District of Columbia;

(2) Four members from District 2, which consists of the States of Florida, Georgia, North Carolina, South Carolina, Virginia, the Commonwealth of Puerto Rico, and the U.S. territories;

(3) Five members from District 3, which consists of the States of Alabama, Arkansas, Louisiana, Mississippi, Oklahoma, Tennessee, and Texas;

(4) Six members from District 4, which consists of the States of Illinois, Indiana, Iowa, Kansas, Kentucky, Michigan, Minnesota, Missouri, Nebraska, North Dakota, Ohio, South Dakota, and Wisconsin; and

(5) One member from District 5, which consists of the States of Alaska, Arizona, California, Colorado, Hawaii, Idaho, Montana, Nevada, New Mexico, Oregon, Utah, Washington, and Wyoming.

(e) Once every five years, the Board will review data, including assessment records, government, industry statistics, and other reliable data, concerning the manufacturing of covered hardwood lumber. The Board shall:

(1) Review the geographical distribution of the volume of covered hardwood manufactured and sold by hardwood lumber, hardwood lumber products, hardwood lumber value-added products, and hardwood plywood manufacturers; and

(2) If warranted, recommend to the Secretary the reapportionment of the Board membership to reflect changes in the geographical distribution of the volume of covered hardwood manufactured and sold by hardwood lumber, hardwood lumber products, hardwood lumber value-added products, and hardwood plywood manufacturers. Any changes in Board composition shall be implemented by the Secretary through rulemaking.

§ 1211.42 Nominations and appointments.

(a) Initial nominations will be submitted to the Secretary by the Blue Ribbon Committee (BRC). Before considering any nominations, the BRC shall publicize the nomination process, using trade press or other means it deems appropriate, and shall outreach to all manufacturers with annual sales of $2 million or more of hardwood lumber, hardwood lumber products, and hardwood lumber value-added products and with annual sales of $10 million or more of hardwood plywood per fiscal year in order to generate nominees that reflect the different operations within the hardwood lumber industry. The BRC may use regional caucuses, mail or other methods to elicit potential nominees. The BRC and USDA shall work together to publicize the nomination process so that eligible candidates are aware of the opportunity to serve on the Board. The BRC shall submit the nominations to the Secretary and recommend two nominees for each Board position specified. In addition, nominees for the initial Board may be submitted directly to the Secretary if accompanied by the signatures of at least 20 persons who pay assessments or will pay assessments under the Order. From the nominations submitted by the BRC or directly to the Secretary, the Secretary shall select the members of the Board.

(b) Subsequent nominations shall be conducted as follows:

(1) The Board shall outreach to all segments of the hardwood lumber industry. The Board may also solicit nominees using existing regional organizations. Initial and subsequent nominees must have annual sales of $2 million or more of hardwood lumber, hardwood products, and hardwood value-added products, or have annual sales of $10 million or more of hardwood plywood per fiscal year;

(2) Manufacturer nominees may provide the Board a short background statement outlining their qualifications to serve on the Board;

(3) Manufacturers who manufacture covered hardwood lumber in more than one district may seek nomination only in the district in which they manufacture the majority of the volume of their covered hardwood lumber. The names of hardwood manufacturer nominees shall be placed on a ballot by district. The ballots along with the background statements shall be mailed to manufacturers in each respective district for a vote. Manufacturers who manufacture covered hardwood lumber in more than one district may only vote in the district in which they manufacture the majority of the volume of their covered hardwood lumber. The Board must submit nominations to the Secretary at least six months before the new Board term begins. Before considering any nominations, the Board shall publicize the nomination process, using trade press or other means it deems appropriate, and shall outreach to all sizes of manufacturers of covered hardwood in order to generate nominees that reflect the different size of operations within the hardwood lumber industry. The Board may use district caucuses or other methods to elicit potential nominees. The votes shall be tabulated for each district with the nominee receiving the highest number of votes at the top of the list in descending order by vote. The top two candidates for each position shall be submitted to the Secretary.

(4) No two members shall be employed by a single corporation, company, partnership, or any other legal entity; and

(5) The Board may recommend to the Secretary modifications to its nomination procedures as it deems appropriate. Any such modifications shall be implemented through rulemaking by the Secretary.

§ 1211.43 Term of office.

(a) With the exception of the initial Board, each Board member will serve a three-year term or until the Secretary selects his or her successor. Each term of office shall begin on January 1 and end on December 31, and no member may serve more than two consecutive terms, excluding any term of office less than three years.

(b) For the initial Board, the terms of Board members shall be staggered for two, three, and four years so that the terms of approximately one-third of the Board expire in any given year.

§ 1211.44 Removal and vacancies.

(a) In the event that any member of the Board ceases to own or work for a hardwood lumber or hardwood plywood manufacturer, or ceases to do business in the district he or she represents, such position shall become vacant.

(b) The Board may recommend to the Secretary that a member be removed from office if the member consistently refuses to perform his or her duties or engages in dishonest acts or willful misconduct. The Secretary shall remove the member if he or she finds that the Board's recommendation shows adequate cause. Further, without recommendation of the Board, a member may be removed by the Secretary upon showing of adequate cause, including the failure by a member to submit reports or remit assessments required under this part. If the Secretary determines that each member's continued service would be detrimental to the achievement of the purposes of the Act.

(c) If a position becomes vacant, nominations to serve the unexpired term will be handled using the nominations process set forth in this Order. If the unexpired term has less than six months remaining, the Secretary may leave the position vacant.

§ 1211.45 Procedure.

(a) At a Board meeting, a majority of the Board members duly appointed by the Secretary will constitute a quorum. A member attending the meeting by telephone or other electronic means shall be considered present for purposes of quorum.

(b) All votes at meetings of the Board and any committees will be cast in person or by electronic voting, including by telephone. Voting by proxy will not be allowed.

(c) Each member of the Board will be entitled to one vote on any matter put to the Board and the motion will carry if supported by more than 50 percent of the Board members present or participating by electronic means.

(d) The Board must give members and the Secretary timely notice of all Board and committee meetings.

(e) In lieu of voting at a properly convened meeting, and when, in the opinion of the Board's chairperson, such action is considered necessary, the Board may take action by mail, telephone, electronic mail, facsimile, or any other means of communication. Any action taken under this procedure is valid only if:

(1) All members and the Secretary are notified and the members are provided the opportunity to vote;

(2) A majority of the members vote in favor of the action; and

(3) All votes are promptly confirmed in writing and recorded in the Board minutes.

§ 1211.46 Reimbursement and attendance.

Board members will serve without compensation. Board members will be reimbursed for reasonable travel expenses, as approved by the Board, which they incur when performing Board business.

§ 1211.47 Powers and duties of the Board.

The Board shall have the following powers and duties:

(a) To administer this Order in accordance with its terms and conditions and to collect assessments;

(b) To develop and recommend to the Secretary for approval such bylaws, rules, and regulations as may be necessary for the functioning of the Board and for administering the Order, including activities authorized to be carried out under the Order;

(c) To meet, organize, and select from among its members a chairperson and such other officers as the Board deems necessary;

(d) To create any committees, including an executive committee, or subcommittees, as the Board deems necessary from its membership. Subcommittees may include individuals other than Board members;

(e) To employ or contract persons, other than the Board members, as the Board considers necessary to assist the Board in carrying out its duties and to determine the compensation and specify the duties of such persons or to contract such services from an organization and to enter into contracts or agreements in order to carry out authorized functions;

(f) To provide appropriate notice of meetings to the industry and USDA and keep minutes of such meetings;

(g) To develop and administer programs, plans, and projects and enter into contracts or agreements, which must be approved by the Secretary before becoming effective, for promotion, research and information, including consumer and industry information, research and advertising

designed to strengthen hardwood lumber industry's position in the marketplace and to maintain, develop, and expand markets for covered hardwood lumber. The payment of costs for such activities shall be with funds collected pursuant to the Order, including funds collected pursuant to section 1211.50(f). Each contract or agreement shall provide that:

(1) The contractor or agreeing party shall develop and submit to the Board a program, plan, or project together with a budget that specifies the cost to be incurred to carry out the activity;

(2) The contractor or agreeing party shall keep accurate records of all of its transactions and make periodic reports to the Board of activities conducted, submit accounting for funds received and expended, and make such other reports as the Secretary or Board may require;

(3) The Secretary may audit the records of the contracting or agreeing party periodically; and

(4) Any subcontractor who enters into a contract with a Board contractor and who receives or otherwise uses funds allocated by the Board shall be subject to the same provisions as the contractor.

(h) To prepare and submit to the Secretary for approval 60 calendar days in advance of the beginning of a fiscal period, rates of assessment and a budget of the anticipated expenses to be incurred in the administration of the Order, including the probable cost of each promotion, research and information activity proposed to be developed or carried out by the Board;

(i) To maintain such records and books and prepare and submit such reports and records from time to time to the Secretary as the Secretary may prescribe; to make appropriate accounting with respect to the receipt and disbursement of all funds entrusted to it; and to keep records that accurately reflect the actions and transactions of the Board;

(j) To act as an intermediary between the Secretary and any manufacturer;

(k) To cause its books to be audited by a certified public accountant at the end of each fiscal year and at such other times as the Secretary may request, and to submit a report of the audit to the Secretary;

(l) To recommend changes to the assessment rate as provided in this part;

(m) To borrow funds necessary for startup expenses of the Order;

(n) To receive, investigate, and report to the Secretary complaints of violations of the Order, including investigating complaints of violation, and ensuring consistent, uniform and appropriate application of this Part;

(o) To consider and recommend to the Secretary new products and the application of the assessment to such products.

(p) To recommend to the Secretary such amendments to the Order as the Board considers appropriate;

(q) To periodically prepare and make public and to make available to manufacturers reports of its activities and, at least once each fiscal period, to make public an accounting of funds received and expended;

(r) To invest assessment funds collected but not yet disbursed pursuant to this Part. Investments shall be in any interest-bearing account or certificate of deposit of a bank that is a member of the Federal Reserve System, obligations fully guaranteed as to principal and interest by the United States or any agency of the United States, or general obligations of any State or any political subdivision of a State.

(s) To work to achieve an effective, continuous, and coordinated program of promotion, research, consumer information, evaluation, and industry information designed to strengthen the hardwood lumber, hardwood lumber products, hardwood lumber value-added products, and hardwood plywood industry's position in the market; maintain and expand existing markets and uses for covered hardwood; and to carry out programs, plans, and projects designed to provide maximum benefits to the hardwood lumber, hardwood lumber products, hardwood lumber value-added products and hardwood plywood industries.

§ 1211.48 Prohibited activities.

The Board may not engage in, and shall prohibit the employees and agents of the Board from engaging in:

(a) Any action that is a conflict of interest;

(b) Using funds collected by the Board under the Order to undertake any action for the purpose of influencing legislation or governmental action or policy, by local, state, national, and foreign governments, other than recommending to the Secretary amendments to this Part; and

(c) No program, plan, or project including advertising shall be false or misleading, or disparaging to another agricultural commodity.

Expenses and Assessments

§ 1211.50 Budget and expenses.

(a) At least 60 days before the beginning of each fiscal year, and as may be necessary thereafter, the Board shall prepare and submit to the Secretary a budget for the fiscal year covering its anticipated expenses and disbursements in administering the Order. Each such budget, which must be approved by the Secretary before it is implemented, shall include:

(1) A statement of objectives and strategy for each program, plan, or project developed and approved by the Board;

(2) A summary of anticipated revenue, with comparative data or at least one preceding year (except for the initial budget);

(3) A summary of proposed expenditures for each program, plan, or project; and

(4) Staff and administrative expense breakdowns, with comparative data for at least one preceding year (except for the initial budget).

(b) Each budget shall provide adequate funds to defray its proposed expenditures and to provide for a reserve.

(c) Subject to this section, any amendment or addition to an approved budget must be approved by the Department, including shifting funds from one program, plan, or project to another. Shifts of funds which do not cause an increase in the Board's approved budget and which are consistent with governing bylaws need not have prior approval by the Secretary.

(d) The Board may incur such expenses, including provision for a reserve, as are reasonable and likely to be incurred for maintenance and functioning of the Board, and to enable it to exercise its powers and perform its duties in accordance with the provisions of the Order. Such expenses shall be paid from funds received by the Board.

(e) With approval of the Secretary, the Board may borrow money for the payment of administrative expenses, subject to the same fiscal, budget, and audit controls as other funds of the Board. Any funds borrowed by the Board shall be expended only for startup costs and capital outlays and are limited to the first year of operation by the Board.

(f) The Board may accept voluntary contributions, and is encouraged to seek other appropriate funding sources to carry out activities authorized by the Order. Such contributions shall be free from any encumbrances by the donor and the Board shall retain complete control of their use. The Board may receive funds from outside sources (*i.e.,* Federal or State grants, Foreign Agricultural Service funds), with approval of the Secretary, for specific authorized projects.

(g) The Board shall reimburse the Secretary for all expenses the Secretary

incurs in the implementation, administration, and supervision of this Part, including all costs relating to the conducting of a referendum in connection with this Part.

(h) For fiscal years beginning three years after the establishment of the Board, the Board may not expend for administration, maintenance, and functioning of the Board in any fiscal year an amount that exceeds 15 percent of the assessments and other income received by the Board for that fiscal year. Reimbursements to the Secretary required under this section are excluded from this limitation on spending.

(i) The Board may establish an operating monetary reserve and may carry over to subsequent fiscal periods excess funds in any reserve so established: *Provided,* That, the funds in the reserve do not exceed one fiscal period's budget of expenses. Subject to approval by the Secretary, such reserve funds may be used to defray any expenses authorized under this subpart.

(j) Pending disbursement of assessments and all other revenue under a budget approved by the Secretary, the Board may invest assessments and all other revenues collected under this part in:

(1) Obligations of the United States or any agency of the United States;

(2) General obligations of any State or any political subdivision of a State;

(3) Interest bearing accounts or certificates of deposit of financial institutions that are members of the Federal Reserve System;

(4) Obligations fully guaranteed as to principal interest by the United States; or

(5) Other investments as authorized by the Secretary.

§ 1211.51 Financial statements.

(a) Upon the Secretary's request, the Board shall prepare and submit financial statements to the Secretary on a monthly or quarterly basis, or at any other time as requested by the Secretary. Each such financial statement shall include, but not be limited to, a balance sheet, income statement, and expense budget. The expense budget shall show expenditures during the time period covered by the report, year-to-date expenditures, and the unexpended budget.

(b) Each financial statement shall be submitted to the Secretary within 30 days after the end of the time period to which it applies.

(c) The Board shall submit to the Secretary an annual financial statement within 90 days after the end of the fiscal year to which it applies.

Assessments

§ 1211.52 Assessments.

(a) The Board's programs and expenses shall be paid by assessments on manufacturers of covered hardwood, other income of the Board, and other funds available to the Board. This section authorizes hardwood lumber manufacturers to be assessed on hardwood plywood and hardwood lumber, both in its green (rough) form and as it is kiln dried or air dried to create hardwood lumber products and hardwood lumber value-added products.

(b) Subject to the exemption specified in § 1211.53, each manufacturer shall pay the following assessment:

Covered hardwood	Assessment rate	Allowable deductions [1]
Hardwood lumber	$1/$1,000 in sales	N/A.
Hardwood lumber products	$1/$1,000 in sales	—dollar value of hardwood lumber purchases.
Hardwood lumber value-added products	$0.75/$1,000 in sales of value-added product plus $1.00 per $1,000 in sales of green (G/AD/KD) hardwood lumber.	—dollar value of hardwood lumber purchases.
Hardwood plywood	$3/$1,000 in sales	N/A.

[1] The deductions are necessary to take into account assessments already paid on green (G/AD/KD) hardwood lumber purchased by the manufacturer to make the product or value-added product.

(1) Hardwood lumber manufacturers that cut raw, green hardwood logs into hardwood lumber or kiln dry or air dry hardwood lumber that can be further processed into products shall pay at the rate of $1.00 per $1,000 in sales of green (G/AD/KD) hardwood lumber;

(2) Hardwood lumber manufacturers that manufacture hardwood lumber products shall pay at a rate of $1.00 per $1,000 in sales of hardwood lumber products minus the dollar value of green (G/AD/KD) hardwood lumber purchases;

(3) Hardwood lumber value-added product manufacturers shall pay a rate of $0.75 per $1,000 in sales of hardwood lumber value-added products, plus $1.00 per $1,000 in sales of green (G/AD/KD) hardwood lumber, minus the dollar value of the green (G/AD/KD) hardwood lumber purchases; and

(4) Hardwood plywood manufacturers shall pay at the rate of $3.00 per $1,000 in sales of hardwood plywood lumber.

(5) Brokered sales of hardwood lumber or hardwood lumber products are excluded from the calculation of assessments.

(6) Vertically integrated manufacturers that manufacture hardwood lumber, then transfer the lumber from one business unit to another within the same company to manufacture non-assessed product, shall pay assessments based on the fair market value of the non-assessed product, minus the fair market value of the green (G/AD/KD) hardwood lumber, minus the fair market value of the green (G/AD/KD) hardwood lumber purchases times $0.001. This formula is necessary to ensure that covered hardwood lumber in a vertically integrated company is appropriately assessed.

(c) Assessments shall be remitted to the Board on a quarterly basis, accompanied by a form that the Board shall develop, no later than thirtieth calendar day of the month following the end of the quarter in which the covered hardwood lumber was marketed. Any information collected pursuant to the collection of assessments, shall be kept confidential as specified in § 1211.72 so that no Board member or person subject to assessment shall have access to such information.

(d) The assessment rate specified in this section may be changed only upon a recommendation by the Board to the Secretary for implementation through rulemaking.

(e) If the assessment is not paid within 60 calendar days of the date it is due, the Board may impose a late payment charge and interest. The late payment charge and rate of interest shall be recommended by the Board to the Secretary through rulemaking. Persons failing to remit total assessments due in a timely manner may also be subject to actions under federal debt collection procedures.

(f) The Board may accept advance payment of assessments that will be credited toward any amount for which that person may become liable. The Board may not pay interest on any advance payment.

(g) If the Board is not in place by the date the first assessments are to be collected, the Secretary shall receive assessments and invest them on behalf of the Board, and shall pay such assessments and any interest earned to the Board when it is established.

(h) The Board may authorize other organizations to collect assessments on its behalf with the approval of the Secretary.

§ 1211.53 Exemption from assessment.

(a) Small hardwood lumber manufacturers and small hardwood plywood manufacturers shall be exempt from paying assessments as follows:

(1) Hardwood lumber manufacturers, hardwood lumber product manufacturers, and hardwood lumber value-added products manufacturers with sales of any assessed product combined to be less than $2 million are exempt from paying assessments.

(2) Hardwood plywood manufacturers with annual sales of less than $10 million are exempt from paying assessments.

(b) Hardwood lumber manufacturers and hardwood plywood manufacturers who meet the exemption threshold shall apply for an exemption, on a form provided by the Board. The certificate of exemption shall remain valid for as long as the annual sales of the respective hardwood lumber manufacturer and hardwood plywood manufacturer remain under the exemption threshold. Upon receipt of an application for exemption, the Board shall determine whether an exemption may be granted. The Board will then issue, if deemed appropriate, a certificate of exemption to each manufacturer who is eligible to receive one. Each person shall retain a copy of the certificate of exemption. The Board may develop additional procedures to administer this exemption as appropriate. Such procedures shall be implemented through rulemaking by the Secretary.

(c) Hardwood lumber manufacturers who did not apply to the Board for an exemption and have annual sales of less than $2 million or hardwood plywood manufacturers that have annual sales of less than $10 million during the fiscal year shall receive a refund from the Board for the applicable assessments within 30 calendar days after the end of the fiscal year. Board staff shall determine the assessments paid and refund the amount due to the manufacturer accordingly.

(d) Hardwood lumber manufacturers who received an exemption certificate from the Board but have annual sales of $2 million or more or hardwood plywood manufacturers that have annual sales of $10 million or more during the fiscal year shall pay the Board the applicable assessments owed on the annual sales of the covered hardwood within 30 calendar days after the end of the fiscal year and submit any necessary reports to the Board pursuant to § 1211.70.

(e) *Organic.* (1) A hardwood lumber or hardwood plywood manufacturer who operates under an approved National Organic Program (7 CFR part 205) (NOP) organic handling system plan may be exempt from the payment of assessments under this part provided that:

(i) Only agricultural products certified as ''organic'' or ''100 percent organic'' (as defined in the NOP) are eligible for exemption;

(ii) The exemption shall apply to all certified ''organic'' or ''100 percent organic'' (as defined in the NOP) products of a manufacturer regardless of whether the agricultural commodity subject to the exemption is manufactured by a person that also manufactures conventional or non-organic agricultural products of the same agricultural commodity as that for which the exemption is claimed;

(iii) The manufacturer maintains a valid certificate of organic operation as issued under the Organic Foods Production Act of 1990 (7 U.S.C. 6501–6522) (OFPA) and the NOP regulations issued under OFPA (7 CFR part 205); and

(iv) Any manufacturer so exempted shall continue to be obligated to pay assessments under this part that are associated with any agricultural products that do not qualify for an exemption under this section.

(2) To apply for exemption under this section, an eligible manufacturer shall submit a request to the Board on an *Organic Exemption Request Form* (Form AMS–15) at any time during the year initially, and annually thereafter on or before the start of the fiscal year, as long as the manufacturer continues to be eligible for the exemption.

(3) A manufacturer request for exemption shall include the following:

(i) The applicant's full name, company name, address, telephone and fax numbers, and email address (optional);

(ii) Certification that the applicant maintains a valid certificate of organic operation issued under the OFPA and the NOP;

(iii) Certification that the applicant manufactures organic products eligible to be labeled ''organic'' or ''100 percent organic'' under the NOP;

(iv) A requirement that the applicant attach a copy of their certificate of organic operation issued by a USDA-accredited certifying agent under the OFPA and the NOP;

(v) Certification, as evidenced by signature and date, that all information provided by the applicant is true; and

(vi) Such other information as may be required by the Board, with the approval of the Secretary.

(4) If a manufacturer complies with the requirements of this section, the Board will grant an assessment exemption and issue a Certificate of Exemption to the manufacturer within 30 calendar days. If the application is disapproved, the Board will notify the applicant of the reason(s) for disapproval within the same timeframe.

(5) The exemption will apply immediately following the issuance of a Certificate of Exemption.

(f) The Board may develop additional procedures to administer this exemption as appropriate. Such procedures shall be implemented through rulemaking by the Secretary.

Promotion, Research and Information

§ 1211.60 Programs, plans, and projects.

(a) The Board shall develop and submit to the Secretary for approval programs, plans, and projects authorized under this Part. Such programs, plans, or projects shall provide for the establishment, issuance, implementation, and administration of appropriate programs for promotion, research and information with respect to covered hardwood.

(b) No program, plan, or project shall be implemented prior to its approval by the Secretary. Once the Secretary approves a program, plan, or project, the Board shall take appropriate steps to implement it.

(c) The Board shall periodically review or evaluate each program, plan, or project implemented under this subpart to ensure that it contributes to an effective program of promotion, research or information. If the Board finds that any such program, plan, or project does not contribute to an effective program of promotion, research or information, then the Board shall terminate such program, plan, or project.

§ 1211.61 Independent evaluation.

Within four years of the first Board meeting and at least once every five years thereafter, the Board shall authorize and fund an independent evaluation of the effectiveness of the Order and programs conducted by the Board pursuant to the Act. The Board shall submit to the Secretary and make available to the public the results of

each periodic independent evaluation conducted under this section.

§ 1211.62 Patents, copyrights, trademarks, information, publications, and product formulations.

Patents, copyrights, trademarks, information, publications, and product formulations developed through the use of funds received by the Board under this part shall be the property of the U.S. Government, as represented by the Board, and shall, along with any rents, royalties, residual payments, or other income from the rental, sales, leasing, franchising, or other uses of such patents, copyrights, trademarks, information, publications, or product formulations, inure to the benefit of the Board; shall be considered income subject to the same fiscal, budget, and audit controls as other funds of the Board; and may be licensed subject to approval by the Secretary. Upon termination of this part, § 1211.83 shall apply to determine disposition of all such property.

Reports, Books and Records

§ 1211.70 Reports.

(a) Each hardwood lumber manufacturer and hardwood lumber plywood manufacturer will be required to provide periodically to the Board staff such information as the Board, with the approval of the Secretary, may require. Such information may include, but not be limited to:

(1) The name, address and telephone number of the manufacturer;

(2) The annual sales of covered hardwood lumber; and

(3) The annual sales of covered hardwood lumber for which assessments were paid.

(b) Such information shall accompany the collected payment of assessments on a quarterly basis specified in § 1211.52.

§ 1211.71 Books and records.

Each manufacturer, including those exempt under § 1211.53, shall maintain any books and records necessary to carry out the provisions of this subpart and regulations issued thereunder, including such records as are necessary to verify any required reports. Such books and records must be made available during normal business hours for inspection by the Board's or Secretary's employees or agents. A manufacturer must maintain the books and records for two years beyond the fiscal period to which they apply.

§ 1211.72 Confidentiality of information.

All information obtained from books, records, or reports under the Act, this subpart and the regulations issued thereunder shall be kept confidential by all persons, including all employees and former employees of the Board, all officers and employees and former officers and employees of contracting and subcontracting agencies or agreeing parties having access to such information. Such information shall not be available to Board members or other manufacturers. Only those persons having a specific need for such information solely to effectively administer the provisions of this subpart shall have access to such information. Only such information so obtained as the Secretary deems relevant shall be disclosed by them, and then only in a judicial proceeding or administrative hearing brought at the direction, or at the request, of the Secretary, or to which the Secretary or any officer of the United States is a party, and involving this subpart. Nothing in this section shall be deemed to prohibit:

(a) The issuance of general statements based upon the reports of the number of persons subject to this subpart or statistical data collected therefrom, which statements do not identify the information furnished by any person; and

(b) The publication, by direction of the Secretary, of the name of any person who has been adjudged to have violated this part, together with a statement of the particular provisions of this part violated by such person.

Miscellaneous

§ 1211.80 Right of the Secretary.

All fiscal matters, programs, plans, or projects, rules or regulations, reports, or other substantive actions proposed and prepared by the Board shall be submitted to the Secretary for approval.

§ 1211.81 Referenda.

(a) *Initial referendum.* The Order shall not become effective unless the Order is approved by a majority of manufacturers voting in the referendum who also represent a majority of the volume (board foot or equivalent) of covered hardwood lumber represented in the referendum and who, during a representative period determined by the Secretary, were engaged in the manufacturing of covered hardwood lumber.

(b) *Subsequent referenda.* Five years after the initial meeting of the Board, the Secretary shall hold a referendum to determine whether manufacturers favor the continuation of the Order. Thereafter, the Secretary shall conduct a referendum at least every seven years. The Order shall continue if it is favored by a majority of manufacturers voting in the referendum who also represent a majority of the volume (board foot or equivalent) of covered hardwood lumber represented in the referendum and who, during a representative period determined by the Secretary, were engaged in the manufacturing of covered hardwood lumber. The Secretary will also conduct a referendum if requested by the Board or if requested by 10 percent or more of all manufacturers eligible to vote in a referendum. In addition, the Secretary may hold a referendum at any time.

§ 1211.82 Suspension and termination.

(a) The Secretary shall suspend or terminate this part or subpart or a provision thereof, if the Secretary finds that this part or subpart or a provision thereof obstructs or does not tend to effectuate the purposes of the Act, or if the Secretary determines that this subpart or a provision thereof is not favored by persons voting in a referendum conducted pursuant to the Act.

(b) The Secretary shall suspend or terminate this subpart at the end of the fiscal period whenever the Secretary determines that its suspension or termination is favored by a majority of manufacturers voting in the referendum who represent a majority of the volume (board foot or equivalent) represented in the referendum, and who, during a representative period determined by the Secretary, have been engaged in the manufacturing of covered hardwood lumber.

(c) If, as a result of a referendum the Secretary determines that this subpart is not approved, the Secretary shall:

(1) Not later than one hundred and eighty (180) calendar days after making the determination, suspend or terminate, as the case may be, the collection of assessments under this subpart.

(2) As soon as practical, suspend or terminate, as the case may be, activities under this subpart in an orderly manner.

§ 1211.83 Proceedings after termination.

(a) Upon the termination of this subpart, the Board shall recommend to the Secretary not more than five of its members to serve as trustees for the purpose of liquidating the affairs of the Board. Such persons, upon designation by the Secretary, shall become trustees of all of the funds and property then in the possession or under control of the Board, including claims for any funds unpaid or property not delivered, or any other claim existing at the time of such termination.

(b) The said trustees shall:

(1) Continue in such capacity until discharged by the Secretary;

(2) Carry out the obligations of the Board under any contracts or agreements entered into pursuant to the Order;

(3) From time to time, account for all receipts and disbursements and deliver all property on hand, together with all books and records of the Board and the trustees, to such person or persons as the Secretary may direct; and

(4) Upon request of the Secretary, execute such assignments or other instruments necessary and appropriate to vest in such persons title and right to all funds, property and claims vested in the Board or the trustees pursuant to the Order.

(c) Any person to whom funds, property or claims have been transferred or delivered pursuant to the Order shall be subject to the same obligations imposed upon the Board and upon the trustees.

(d) Any residual funds not required to defray the necessary expenses of liquidation shall be turned over to the Secretary to be disposed of, to the extent practical, to one or more hardwood lumber and hardwood plywood industry organizations in the interest of continuing hardwood lumber and hardwood plywood promotion, research and information programs.

§ 1211.84 Effect of termination or amendment.

Unless otherwise expressly provided by the Secretary, the termination or amendment of this part or any subpart thereof, shall not:

(a) Affect or waive any right, duty, obligation or liability which shall have arisen or which may thereafter arise in connection with any provision of this part; or

(b) Release or extinguish any violation of this part; or

(c) Affect or impair any rights or remedies of the United States, or of the Secretary, or of any other persons with respect to any such violation.

§ 1211.85 Personal liability.

No member or employee of the Board shall be held personally responsible, either individually or jointly with others, in any way whatsoever, to any person for errors in judgment, mistakes, or other acts, either of commission or omission, as such member or employee, except for acts of dishonesty or willful misconduct.

§ 1211.86 Separability.

If any provision of this subpart is declared invalid or the applicability thereof to any person or circumstances is held invalid, the validity of the remainder of this subpart or the applicability thereof to other persons or circumstances shall not be affected thereby.

§ 1211.87 Amendments.

Amendments to this subpart may be proposed from time to time by the Board or by any interested person affected by the provisions of the Act, including the Secretary.

§ 1211.88 OMB control number.

The control numbers assigned to the information collection requirements of this part by the Office of Management and Budget pursuant to the Paperwork Reduction Act of 1995, 44 U.S.C. chapter 35, are OMB control number 0505–0001 (Board nominee background statement) and OMB control number 0581–NEW.

Dated: June 1, 2015.

Erin Morris,

Associate Administrator.

[FR Doc. 2015–13719 Filed 6–8–15; 8:45 am]

BILLING CODE 3410–02–P

DEPARTMENT OF TRANSPORTATION

Federal Aviation Administration

14 CFR Part 39

[Docket No. FAA–2015–1998; Directorate Identifier 2014–SW–035–AD]

RIN 2120–AA64

Airworthiness Directives; MD Helicopters Inc.

AGENCY: Federal Aviation Administration (FAA), DOT.

ACTION: Notice of proposed rulemaking (NPRM).

SUMMARY: We propose to adopt a new airworthiness directive (AD) for MD Helicopters Inc. (MDHI) Model 500N and 600N helicopters with certain rotating cone assemblies installed. This proposed AD would require establishing a life limit of 10,000 hours time-in-service (TIS) on these rotating cone assemblies. This proposed AD is prompted by the determination that MDHI created rotating cone assemblies with new dash numbers but incorrectly failed to identify them as life-limited parts. The proposed actions are intended to prevent operation of rotating cone assemblies past their life limits, failure of the rotating cone assemblies, loss of directional control, and subsequent loss of control of the helicopter.

DATES: We must receive comments on this proposed AD by August 10, 2015.

ADDRESSES: You may send comments by any of the following methods:

- *Federal eRulemaking Docket:* Go to *http://www.regulations.gov.* Follow the online instructions for sending your comments electronically.
- *Fax:* 202–493–2251.
- *Mail:* Send comments to the U.S. Department of Transportation, Docket Operations, M–30, West Building Ground Floor, Room W12–140, 1200 New Jersey Avenue SE., Washington, DC 20590–0001.
- *Hand Delivery:* Deliver to the ''Mail'' address between 9 a.m. and 5 p.m., Monday through Friday, except Federal holidays.

Examining the AD Docket

You may examine the AD docket on the Internet at *http://www.regulations.gov* or in person at the Docket Operations Office between 9 a.m. and 5 p.m., Monday through Friday, except Federal holidays. The AD docket contains this proposed AD, the economic evaluation, any comments received, and other information. The street address for the Docket Operations Office (telephone 800–647–5527) is in the **ADDRESSES** section. Comments will be available in the AD docket shortly after receipt.

For service information identified in this proposed AD, contact MD Helicopters, Inc., Attn: Customer Support Division, 4555 E. McDowell Rd., Mail Stop M615, Mesa, AZ 85215–9734; telephone 1–800–388–3378; fax 480–346–6813; or at *http://www.mdhelicopters.com.* You may review the referenced service information at the FAA, Office of the Regional Counsel, Southwest Region, 2601 Meacham Blvd., Room 663, Fort Worth, Texas 76137.

FOR FURTHER INFORMATION CONTACT: Galib Abumeri, Aerospace Engineer, Los Angeles Aircraft Certification Office, Transport Airplane Directorate, FAA, 3960 Paramount Blvd., Lakewood, California 90712, telephone 562–627–5324; email *Galib.Abumeri@faa.gov.*

SUPPLEMENTARY INFORMATION:

Comments Invited

We invite you to participate in this rulemaking by submitting written comments, data, or views. We also invite comments relating to the economic, environmental, energy, or federalism impacts that might result from adopting the proposals in this document. The most helpful comments reference a specific portion of the proposal, explain the reason for any

recommended change, and include supporting data. To ensure the docket does not contain duplicate comments, commenters should send only one copy of written comments, or if comments are filed electronically, commenters should submit only one time.

We will file in the docket all comments that we receive, as well as a report summarizing each substantive public contact with FAA personnel concerning this proposed rulemaking. Before acting on this proposal, we will consider all comments we receive on or before the closing date for comments. We will consider comments filed after the comment period has closed if it is possible to do so without incurring expense or delay. We may change this proposal in light of the comments we receive.

Discussion

We propose to adopt a new AD for MDHI Model 500N helicopters with a rotating cone assembly part number (P/N) 500N3740–81 installed and Model 600N helicopters with a rotating cone assembly P/N 500N3740–71 installed. This proposed AD would require establishing a new life limit for these part-numbered rotating cone assemblies. This proposed AD is prompted by the determination that MDHI created rotating cone assemblies with new dash numbers and did not identify them as life-limited parts. Although these parts have a life limit of 10,000 hours TIS, they were incorrectly omitted from the Airworthiness Limitation Section of the Rotorcraft Flight Manual. MDHI reports that some of the affected parts were sold as spares while others were installed on new helicopters in production.

The proposed actions are intended to prevent a rotating cone assembly remaining in service beyond its fatigue life. This condition could result in failure of the rotating cone assembly and subsequent loss of control of the helicopter.

FAA's Determination

We are proposing this AD because we evaluated all known relevant information and determined that an unsafe condition exists and is likely to exist or develop on other products of these same type designs.

Related Service Information

MDHI issued Service Bulletin SB500N–046 and SB600N–054 (SB) as a single bulletin on July 9, 2012. The SB calls for a one-time inspection within 100 flight hours to determine the rotating cone assembly's part number on MDHI Model 500N and 600N helicopters. The SB then states to correct the component record for certain rotating cone assemblies.

The SB also specifies determining the rotating cone assembly's total service time since new and recording this on the component record. MDHI reports that failure to comply with the SB may result in an aircraft exceeding the life limit of the rotating cone assembly and that this could lead to component failure and loss of directional control of the helicopter.

Proposed AD Requirements

This proposed AD would require within 1 year or at the next annual inspection, whichever comes later:

- Creating a component history card or equivalent record for the rotating cone assembly, P/N 500N3740–81 or P/N 500N3740–71, whichever applies to your helicopter, and recording a life limit of 10,000 hours TIS.
- Revising the Airworthiness Limitations section of the applicable maintenance manual or the Instruction for Continued Airworthiness by establishing a new retirement life of 10,000 hours TIS for each rotating cone assembly. Accomplish this requirement by making pen-and-ink changes or inserting a copy of this AD into the applicable maintenance manual or the Instruction for Continued Airworthiness.
- Removing from service any rotating cone assembly, P/N 500N3740–81 or P/N 500N3740–71, that has 10,000 or more hours TIS. Installing rotating cone assembly, P/N 500N3740–81 or P/N 500N3740–71, is prohibited unless you have complied with the previous requirements of this AD.

Differences Between This Proposed AD and the Service Information

The SB calls for inspecting the rotating cone assembly to determine its P/N. We make no requirement about how to determine the P/N. The compliance time for the SB is within 100 flight hours, while this proposed AD would require compliance within 1 year or by the next annual inspection, whichever comes later.

Costs of Compliance

We estimate that this proposed AD would affect 8 helicopters of U.S. Registry and that labor costs average $85 a work hour. Based on these estimates, we expect creating a component history card and revising the appropriate records would take 1 work-hour. No parts would be needed for a total cost of $85 per helicopter and $680 for the U.S. fleet.

Authority for This Rulemaking

Title 49 of the United States Code specifies the FAA's authority to issue rules on aviation safety. Subtitle I, section 106, describes the authority of the FAA Administrator. ''Subtitle VII: Aviation Programs,'' describes in more detail the scope of the Agency's authority.

We are issuing this rulemaking under the authority described in ''Subtitle VII, Part A, Subpart III, Section 44701: General requirements.'' Under that section, Congress charges the FAA with promoting safe flight of civil aircraft in air commerce by prescribing regulations for practices, methods, and procedures the Administrator finds necessary for safety in air commerce. This regulation is within the scope of that authority because it addresses an unsafe condition that is likely to exist or develop on products identified in this rulemaking action.

Regulatory Findings

We determined that this proposed AD would not have federalism implications under Executive Order 13132. This proposed AD would not have a substantial direct effect on the States, on the relationship between the national Government and the States, or on the distribution of power and responsibilities among the various levels of government.

For the reasons discussed, I certify this proposed regulation:

1. Is not a ''significant regulatory action'' under Executive Order 12866;

2. Is not a ''significant rule'' under the DOT Regulatory Policies and Procedures (44 FR 11034, February 26, 1979);

3. Will not affect intrastate aviation in Alaska to the extent that it justifies making a regulatory distinction; and

4. Will not have a significant economic impact, positive or negative, on a substantial number of small entities under the criteria of the Regulatory Flexibility Act.

We prepared an economic evaluation of the estimated costs to comply with this proposed AD and placed it in the AD docket.

List of Subjects in 14 CFR Part 39

Air transportation, Aircraft, Aviation safety, Incorporation by reference, Safety.

The Proposed Amendment

Accordingly, under the authority delegated to me by the Administrator, the FAA proposes to amend 14 CFR part 39 as follows:

PART 39—AIRWORTHINESS DIRECTIVES

■ 1. The authority citation for part 39 continues to read as follows:

Authority: 49 U.S.C. 106(g), 40113, 44701.

§ 39.13 [Amended]

■ 2. The FAA amends § 39.13 by adding the following new airworthiness directive (AD):

MD Helicopters Inc.: Docket No. FAA–2015–1998; Directorate Identifier 2014–SW–035–AD.

(a) Applicability

This AD applies to MD Helicopters Inc. (MDHI) Model 500N with a rotating cone assembly part number (P/N) 500N3740–81 installed, and Model 600N helicopters with a rotating cone assembly P/N 500N3740–71 installed, certificated in any category.

(b) Unsafe Condition

This AD defines the unsafe condition as a rotating cone assembly remaining in service beyond its fatigue life. This condition could result in failure of the rotating cone assembly and loss of control of the helicopter.

(c) Comments Due Date

We must receive comments by August 10, 2015.

(d) Compliance

You are responsible for performing each action required by this AD within the specified compliance time unless it has already been accomplished prior to that time.

(e) Required Actions

(1) Within 1 year or at the next annual inspection, whichever comes later:

(i) Create a component history card or equivalent record for each rotating cone assembly, P/N 500N3740–81 and P/N 500N3740–71, and record a life limit of 10,000 hours time-in-service (TIS).

(ii) Revise the Airworthiness Limitations Section of the applicable maintenance manual or Instructions for Continued Airworthiness by establishing a new retirement life of 10,000 hours TIS for each rotating cone assembly, P/N 500N3740–81 and P/N 500N3740–71, by making pen-and-ink changes or by inserting a copy of this AD into the Airworthiness Limitations Section of the maintenance manual or the Instructions for Continued Airworthiness.

(iii) Remove from service any rotating cone assembly, P/N 500N3740–81 and P/N 500N3740–71, that has 10,000 or more hours TIS.

(2) Do not install a rotating cone assembly, P/N 500N3740–81 or P/N 500N3740–71, on any helicopter unless you have complied with the requirements of this AD.

(f) Alternative Methods of Compliance (AMOC)

(1) The Manager, Los Angeles Aircraft Certification Office, FAA, may approve AMOCs for this AD. Send your proposal to: Galib Abumeri, Aerospace Engineer, Los Angeles Aircraft Certification Office, Transport Airplane Directorate, FAA, 3960 Paramount Blvd., Lakewood, California 90712, telephone 562–627–5324; email *9-ANM-LAACO-AMOC-REQUESTS@faa.gov.*

(2) For operations conducted under a 14 CFR part 119 operating certificate or under 14 CFR part 91, subpart K, we suggest that you notify your principal inspector, or lacking a principal inspector, the manager of the local flight standards district office or certificate holding district office before operating any aircraft complying with this AD through an AMOC.

(g) Additional Information

MD Helicopters Inc. Service Bulletin SB500N–046/SB600N–054, dated July 9, 2012, which is not incorporated by reference, contains additional information about the subject of this AD. For service information identified in this AD, contact MD Helicopters, Inc., Attn: Customer Support Division, 4555 E. McDowell Rd., Mail Stop M615, Mesa, AZ 85215–9734; telephone 1–800–388–3378; fax 480–346–6813; or at *http://www.mdhelicopters.com.* You may review a copy of information at the FAA, Office of the Regional Counsel, Southwest Region, 2601 Meacham Blvd., Room 663, Fort Worth, Texas 76137.

(h) Subject

Joint Aircraft Service Component (JASC) Code: 5302, Rotorcraft Tail Boom.

Issued in Fort Worth, Texas, on May 29, 2015.

Lance T. Gant,

Acting Directorate Manager, Rotorcraft Directorate, Aircraft Certification Service.

[FR Doc. 2015–13853 Filed 6–8–15; 8:45 am]

BILLING CODE 4910–13–P

DEPARTMENT OF TRANSPORTATION

Federal Aviation Administration

14 CFR Part 39

[Docket No. FAA–2015–2048; Directorate Identifier 2015–CE–015–AD]

RIN 2120–AA64

Airworthiness Directives; British Aerospace Regional Aircraft Airplanes

AGENCY: Federal Aviation Administration (FAA), Department of Transportation (DOT).

ACTION: Notice of proposed rulemaking (NPRM).

SUMMARY: We propose to adopt a new airworthiness directive (AD) for British Aerospace Regional Aircraft Jetstream Series 3101 and Jetsream Model 3201 airplanes. This proposed AD results from mandatory continuing airworthiness information (MCAI) originated by an aviation authority of another country to identify and correct an unsafe condition on an aviation product. The MCAI describes the unsafe condition as missing countersunk washers under the head of the main landing gear trunnion cap tension bolts that could cause fatigue in the bolt shanks. We are issuing this proposed AD to require actions to address the unsafe condition on these products.

DATES: We must receive comments on this proposed AD by July 24, 2015.

ADDRESSES: You may send comments by any of the following methods:

- *Federal eRulemaking Portal:* Go to *http://www.regulations.gov*. Follow the instructions for submitting comments.
- *Fax:* (202) 493–2251.
- *Mail:* U.S. Department of Transportation, Docket Operations, M–30, West Building Ground Floor, Room W12–140, 1200 New Jersey Avenue SE., Washington, DC 20590.
- *Hand Delivery:* U.S. Department of Transportation, Docket Operations, M–30, West Building Ground Floor, Room W12–140, 1200 New Jersey Avenue SE., Washington, DC 20590, between 9 a.m. and 5 p.m., Monday through Friday, except Federal holidays.

For service information identified in this proposed AD, contact BAE Systems (Operations) Limited, Customer Information Department, Prestwick International Airport, Ayrshire, KA9 2RW, Scotland, United Kingdom; telephone: +44 1292 675207; fax: +44 1292 675704; email: *RApublications@baesystems.com;* Internet: *http://www.baesystems.com/Businesses/RegionalAircraft/*. You may review this referenced service information at the FAA, Small Airplane Directorate, 901 Locust, Kansas City, Missouri 64106. For information on the availability of this material at the FAA, call (816) 329–4148.

Examining the AD Docket

You may examine the AD docket on the Internet at *http://www.regulations.gov* by searching for and locating Docket No. FAA–2015–2048; or in person at the Docket Management Facility between 9 a.m. and 5 p.m., Monday through Friday, except Federal holidays. The AD docket contains this proposed AD, the regulatory evaluation, any comments received, and other information. The street address for the Docket Office (telephone (800) 647–5527) is in the **ADDRESSES** section. Comments will be available in the AD docket shortly after receipt.

FOR FURTHER INFORMATION CONTACT: Taylor Martin, Aerospace Engineer, FAA, Small Airplane Directorate, 901 Locust, Room 301, Kansas City, Missouri 64106; telephone: (816) 329–4138; fax: (816) 329–4090; email: *taylor.martin@faa.gov*.

SUPPLEMENTARY INFORMATION:

Comments Invited

We invite you to send any written relevant data, views, or arguments about this proposed AD. Send your comments to an address listed under the **ADDRESSES** section. Include ''Docket No. FAA–2015–2048; Directorate Identifier 2015–CE–015–AD'' at the beginning of your comments. We specifically invite comments on the overall regulatory, economic, environmental, and energy aspects of this proposed AD. We will consider all comments received by the closing date and may amend this proposed AD because of those comments.

We will post all comments we receive, without change, to *http://regulations.gov,* including any personal information you provide. We will also post a report summarizing each substantive verbal contact we receive about this proposed AD.

Discussion

The European Aviation Safety Agency (EASA), which is the Technical Agent for the Member States of the European Community, has issued AD No.: 2015–0061, dated April 20, 2015 (referred to after this as ''the MCAI''), to correct an unsafe condition for the specified products. The MCAI states:

> The review of the BAE production drawing for main landing gear (MLG) fitting installation identified a risk of omitting installation of a countersunk washer under the head of the MLG trunnion cap tension bolts, potentially causing fatigue in the bolt shank under the head of such tension bolt(s).
>
> This condition, if not detected and corrected, could lead to failure of the bolt(s), thereby compromising the structural integrity of the other MLG tension bolts holding the MLG in place, possibly resulting in collapse of the MLG on take-off or landing with consequent damage to the aeroplane and injury to occupants.
>
> Although so far, no in-service bolt head failures have been reported since entry in to service of the type design in 1986, to address this potential unsafe condition, BAE Systems (Operations) Ltd issued Service Bulletin (SB) 57–JA120141 to provide inspection instructions.
>
> For the reasons described above, this AD requires inspection and, depending on findings, replacement of the MLG trunnion cap tension bolts.

You may examine the MCAI on the Internet at *http://www.regulations.gov* by searching for and locating Docket No. FAA–2015–2048.

Related Service Information Under 1 CFR Part 51

British Aerospace Regional Aircraft has issued British Aerospace Jetstream Series 3100 & 3200 Service Bulletin 57–JA120141, REVISION 1, dated April 8, 2014. The service information describes procedures for inspection and replacement of main landing gear trunnion cap tension bolts. This service information is reasonably available because the interested parties have access to it through their normal course of business or by the means identified in the **ADDRESSES** section of this NPRM.

FAA's Determination and Requirements of the Proposed AD

This product has been approved by the aviation authority of another country, and is approved for operation in the United States. Pursuant to our bilateral agreement with this State of Design Authority, they have notified us of the unsafe condition described in the MCAI and service information referenced above. We are proposing this AD because we evaluated all information and determined the unsafe condition exists and is likely to exist or develop on other products of the same type design.

Costs of Compliance

We estimate that this proposed AD will affect 66 products of U.S. registry. We also estimate that it would take about 6 work-hours per product to comply with the basic requirements of this proposed AD. The average labor rate is $85 per work-hour.

Based on these figures, we estimate the cost of the proposed AD on U.S. operators to be $33,660, or $510 per product.

In addition, we estimate that any necessary follow-on actions would take about 1 work-hour and require parts costing $1,200, for a cost of $1,285 per product. We have no way of determining the number of products that may need these actions.

Authority for This Rulemaking

Title 49 of the United States Code specifies the FAA's authority to issue rules on aviation safety. Subtitle I, section 106, describes the authority of the FAA Administrator. ''Subtitle VII: Aviation Programs,'' describes in more detail the scope of the Agency's authority.

We are issuing this rulemaking under the authority described in ''Subtitle VII, Part A, Subpart III, Section 44701: General requirements.'' Under that section, Congress charges the FAA with promoting safe flight of civil aircraft in air commerce by prescribing regulations for practices, methods, and procedures the Administrator finds necessary for safety in air commerce. This regulation is within the scope of that authority because it addresses an unsafe condition that is likely to exist or develop on products identified in this rulemaking action.

Regulatory Findings

We determined that this proposed AD would not have federalism implications under Executive Order 13132. This proposed AD would not have a substantial direct effect on the States, on the relationship between the national Government and the States, or on the distribution of power and responsibilities among the various levels of government.

For the reasons discussed above, I certify this proposed regulation:

(1) Is not a ''significant regulatory action'' under Executive Order 12866,

(2) Is not a ''significant rule'' under the DOT Regulatory Policies and Procedures (44 FR 11034, February 26, 1979),

(3) Will not affect intrastate aviation in Alaska, and

(4) Will not have a significant economic impact, positive or negative, on a substantial number of small entities under the criteria of the Regulatory Flexibility Act.

List of Subjects in 14 CFR Part 39

Air transportation, Aircraft, Aviation safety, Incorporation by reference, Safety.

The Proposed Amendment

Accordingly, under the authority delegated to me by the Administrator, the FAA proposes to amend 14 CFR part 39 as follows:

PART 39—AIRWORTHINESS DIRECTIVES

■ 1. The authority citation for part 39 continues to read as follows:

Authority: 49 U.S.C. 106(g), 40113, 44701.

§ 39.13 [Amended]

■ 2. The FAA amends § 39.13 by adding the following new AD:

British Aerospace Regional Aircraft: Docket No. FAA–2015–2048; Directorate Identifier 2015–CE–015–AD.

(a) Comments Due Date

We must receive comments by July 24, 2015.

(b) Affected ADs

None.

(c) Applicability

This AD applies to British Aerospace Regional Aircraft Jetstream Series 3101 and Jetsream Model 3201 airplanes, all serial numbers, certificated in any category.

(d) Subject

Air Transport Association of America (ATA) Code 32: Landing Gear.

(e) Reason

This AD was prompted by mandatory continuing airworthiness information (MCAI) originated by an aviation authority of another country to identify and correct an unsafe condition on an aviation product. The MCAI describes the unsafe condition as missing countersunk washers under the head of the main landing gear (MLG) trunnion cap tension bolts that could cause fatigue in the bolt shanks. We are issuing this AD to detect and correct missing countersunk washers, which could lead to failure of the bolt(s), thereby compromising the structural integrity of the other MLG tension bolts holding the MLG in place, possibly resulting in collapse of the MLG on take-off or landing with consequent damage to the airplane and injury to occupants.

(f) Actions and Compliance

Unless already done, do the actions in paragraphs (f)(1) through (f)(4) of this AD, including all subparagraphs, following the Accomplishment Instructions in British Aerospace Jetstream Series 3100 & 3200 Service Bulletin 57–JA120141, REVISION 1, dated April 8, 2014:

(1) This AD allows credit for the actions required in paragraphs (f)(3) and (f)(4), including all subparagraphs, of this AD if done before the effective date of this AD following the Accomplishment Instructions of British Aerospace Jetstream Series 3100 & 3200 Service Bulletin 57–JA120141, Original Issue, dated: July 31, 2012.

(2) For the purposes of this AD, owner/operators who do not track total flight cycles (FC), multiply the total number of airplane hours time-in-service by 0.75 to calculate the FC.

(3) *For Pre-Mod JM5218 airplanes:* Within 250 FC after the effective date of this AD, do a magnetic particle inspection (MPI) of each MLG trunnion cap tension bolt.

(i) If no crack is found during the MPI required by paragraph (f)(1) of this AD, before further flight, either re-install the crack-free bolt(s) or install a replacement bolt(s) having the same part number (P/N) as the original bolt. Install a countersunk washer under the bolt(s) ensuring the washer P/N is applicable to the diameter bolt installed as specified in figure 1 of paragraph (f)(3)(i) of this AD.

Bolt P/N	Washer P/N
MS21250H06040	PKS1000–6–2–S (washer).
MS21250H07040	PKS1000–7–2–S (washer).

Figure 1 of paragraph (f)(3)(i)—Pre-Mod JM5218 Replacement Parts

(ii) If a cracked bolt is found during the inspection required by paragraph (f)(3) of this AD, before further flight, replace each cracked bolt with a replacement bolt having the same P/N as the original bolt. Install a countersunk washer under the bolt ensuring the washer P/N is applicable to the diameter bolt installed as specified in figure 1 of paragraph (f)(3)(i) of this AD.

(4) *For Post-Mod JM5218 airplanes:* Visually inspect each MLG trunnion cap tension bolt to determine which type of bolt is installed.

(i) If it is determined the installed bolts are P/N MS21134H07045 or P/N MS21134H07059 during the inspection required in paragraph (f)(4) of this AD, before further flight (except as specified in paragraph (f)(4)(i)(A) of this AD), replace each 'old' bolt P/N with a 'new' bolt P/N as specified in figure 2 of paragraph (f)(4)(i) of this AD and install a washer having P/N PKS1000–7–2–S under each bolt.

Bolt P/N 'Old'	Bolt P/N 'New'
MS21134H07045	MS21134H07046, or MS21250H07046.
MS21134H07059	MS21134H07060, or MS21250H07060.

Figure 2 of paragraph (f)(4)(i)—Post-Mod JM5218 Replacement Parts

(A) If no 'new' replacement bolt is available to comply with paragraph (f)(4)(i) of this AD, the 'old' bolt may be reinstalled without a countersunk washer, provided that within 500 FC after reinstallation and repetitively thereafter at intervals not to exceed 500 FC, each affected bolt is inspected by MPI.

(B) Within 2,000 FC after reinstallation of a bolt as allowed by paragraph (f)(4)(i)(A) of this AD or before further flight if a crack was found during any MPI as required by paragraph (f)(4)(i)(A) of this AD, whichever occurs first, replace the 'old' bolt P/N with a 'new' bolt P/N as specified in figure 2 of paragraph (f)(4)(i) of this AD and install a washer having P/N PKS1000–7–2–S under each bolt.

(ii) If it is determined the installed bolts are P/N MS21250H07046 or P/N MS21250H07060 and no countersunk washer is installed during the inspection required in paragraph (f)(4) of this AD, before further flight, do an MPI of each MLG trunnion cap tension bolt.

(A) If no crack is found during the MPI required by paragraph (f)(4)(ii) of this AD, before further flight, either re-install the crack-free bolts or install replacement bolts having a 'new' bolt P/N as specified in figure 2 of paragraph (f)(4)(i) of this AD and install a countersunk washer P/N PKS1000–7–2–S under each bolt.

(B) If any crack is found during the MPI required by paragraph (f)(4)(ii) of this AD, before further flight, replace each cracked bolt with a serviceable one having a 'new' bolt P/N as specified in figure 2 of paragraph (f)(4)(i) of this AD and install a countersunk washer P/N PKS1000–7–2–S under each bolt.

(g) Other FAA AD Provisions

The following provisions also apply to this AD:

(1) *Alternative Methods of Compliance (AMOCs):* The Manager, Standards Office, FAA, has the authority to approve AMOCs for this AD, if requested using the procedures found in 14 CFR 39.19. Send information to ATTN: Taylor Martin, Aerospace Engineer, FAA, Small Airplane Directorate, 901 Locust, Room 301, Kansas City, Missouri 64106; telephone: (816) 329–4138; fax: (816) 329–4090; email: *taylor.martin@faa.gov*. Before using any approved AMOC on any airplane to which the AMOC applies, notify your appropriate principal inspector (PI) in the FAA Flight Standards District Office (FSDO), or lacking a PI, your local FSDO.

(2) *Airworthy Product:* For any requirement in this AD to obtain corrective actions from a manufacturer or other source, use these actions if they are FAA-approved. Corrective actions are considered FAA-approved if they are approved by the State of Design Authority (or their delegated agent). You are required to assure the product is airworthy before it is returned to service.

(h) Related Information

Refer to MCAI European Aviation Safety Agency (EASA) AD No.: 2015–0061, dated April 20, 2015; and British Aerospace Jetstream Series 3100 & 3200 Service Bulletin 57–JA120141, Original Issue, dated: July 31, 2012, for related information. You may examine the MCAI on the Internet at *http://www.regulations.gov* by searching for and locating Docket No. FAA–2015–2048. For service information related to this AD, contact BAE Systems (Operations) Limited, Customer Information Department, Prestwick International Airport, Ayrshire, KA9 2RW, Scotland, United Kingdom; telephone: +44 1292 675207; fax: +44 1292 675704; email: *RApublications@baesystems.com;* Internet: *http://www.baesystems.com/Businesses/RegionalAircraft/*. You may review this referenced service information at the FAA, Small Airplane Directorate, 901 Locust, Kansas City, Missouri 64106. For information on the availability of this material at the FAA, call (816) 329–4148.

Issued in Kansas City, Missouri, on June 1, 2015.

Earl Lawrence,

Manager, Small Airplane Directorate, Aircraft Certification Service.

[FR Doc. 2015–13918 Filed 6–8–15; 8:45 am]

BILLING CODE 4910–13–P

DEPARTMENT OF HOMELAND SECURITY

Coast Guard

33 CFR Parts 101 and 105

[Docket No. USCG–2013–1087]

Seafarers' Access to Maritime Facilities

Correction

In proposed rule document 2015–12657 appearing on pages 30189–30190 in the issue of Wednesday, May 27, 2015, make the following correction(s):

On page 30189, in the **DATES** section, in the fourth line, ''July 1, 2015'' should read ''July 27, 2015''.

[FR Doc. C1–2015–12657 Filed 6–8–15; 8:45 am]

BILLING CODE 1505–01–P

DEPARTMENT OF VETERANS AFFAIRS

38 CFR Part 4

RIN 2900–AP14

Schedule for Rating Disabilities; The Organs of Special Sense and Schedule of Ratings—Eye

AGENCY: Department of Veterans Affairs.

ACTION: Proposed rule.

SUMMARY: The Department of Veterans Affairs (VA) proposes to amend the portion of the VA Schedule for Rating Disabilities (VASRD or rating schedule) that addresses the organs of special sense and schedule of ratings—eye. The purpose of these changes is to incorporate medical advances that have occurred since the last review, update current medical terminology, and provide clear evaluation criteria. The proposed rule reflects advances in medical knowledge, recommendations from the National Academy of Sciences (NAS), and comments from subject matter experts and the public garnered as part of a public forum. The public forum, focusing on revisions to the organs of special sense and schedule of ratings for eye disabilities, was held on January 19–20, 2012.

DATES: Comments must be received on or before August 10, 2015.

ADDRESSES: Written comments may be submitted through *www.Regulations.gov;* by mail or hand-delivery to Director, Office of Regulation Policy and Management (02REG), Department of Veterans Affairs, 810 Vermont Avenue NW., Room 1068, Washington, DC 20420; or by fax to (202) 273–9026. Comments should indicate that they are submitted in response to ''RIN 2900–AP14–Schedule for Rating Disabilities; The Organs of Special Sense and Schedule of Ratings—Eye.'' Copies of comments received will be available for public inspection in the Office of Regulation Policy and Management, Room 1068, between the hours of 8:00 a.m. and 4:30 p.m., Monday through Friday (except holidays). Please call (202) 461–4902 for an appointment. (This is not a toll-free number.) In addition, during the comment period, comments may be viewed online through the Federal Docket Management System (FDMS) at *www.Regulations.gov*.

FOR FURTHER INFORMATION CONTACT: Nick Olmos-Lau, M.D., Medical Officer, Part 4 VASRD Staff (211C), Compensation Service, Veterans Benefits Administration, Department of Veterans Affairs, 810 Vermont Avenue NW., Washington, DC 20420, (202) 461–9700. (This is not a toll-free telephone number.)

SUPPLEMENTARY INFORMATION: As part of VA's ongoing revision of the VA Schedule for Rating Disabilities (VASRD or rating schedule), VA proposes changes to 38 CFR 4.77–4.79, which pertain to the organs of special sense and disabilities and disease of the eye. The proposed changes will: (1) Update the medical terminology of certain eye conditions; (2) add medical conditions frequently encountered but not currently found in the rating schedule; and (3) refine evaluation criteria based on medical advances that have occurred since the last revision and current understanding of functional changes associated with or resulting from disease or injury (pathophysiology).

I. § 4.77 Visual Fields

Current § 4.77(a) requires examiners to record the results of visual field testing on a standard Goldmann chart and include the Goldmann chart with the examination report. In order to improve the efficiency and timeliness of claims processing, VA proposes to eliminate the requirement that examiners provide VA with the Goldmann chart and instead only require the visual field measurements necessary for rating purposes.

An examination of visual fields requires an examiner to indicate the Veteran's maximum visual field at 16 prescribed points of measurement. Under the current regulation, if the results of an examination do not include the Goldmann chart used for visual field testing, it must be returned to the examiner for inclusion of the completed chart prior to evaluating the disability. This results in unnecessary delays in claims where all relevant information to evaluate visual field impairment is present, but is not in the prescribed format. In addition to reducing delays in processing time, eliminating the chart requirement expands the ability to evaluate disabilities on the basis of private treatment records, provided they contain sufficient evidence to evaluate the disability. Under the proposed change, an examination of a visual field impairment is sufficient for rating purposes if it provides, at a minimum, visual field measurements of at least 16 meridians 22½ degrees apart for each eye and it indicates the Goldmann equivalent used during testing. As this information need not be provided in a chart format, VA proposes to amend in current paragraph (a) the phrase ''The examiner must chart at least 16 meridians . . .'' to read ''The examiner must document the results for at least 16 meridians . . .''.

Similarly, VA proposes to amend the language in current paragraph (a) which directs an examiner to ''include the tracing of either the tangent screen or of the 30-degree threshold visual field . . .'' when additional testing is required. As above, VA proposes that the examiner need only ''document the results'' of the additional testing rather than provide the actual tracing itself.

No other changes to § 4.77 are proposed.

II. § 4.78 Muscle Function

Section 4.78(a) currently requires muscle function to be examined and measured using Goldmann perimeters. However, due to the increasing difficulty encountered by evaluation facilities in acquiring and repairing Goldmann perimeters, the Tangent Screen has been developed as an alternative method for documenting alteration of eye muscle function. David F. Chang, Chapter 2. Ophthalmologic Examination, Vaughan & Asbury's General Ophthalmology, *http://access medicine.mhmedical.com/content.aspx?bookid=387&Sectionid=40229319* (last visited Apr. 29, 2014). The Tangent Screen is an inexpensive device, commonly found in many eye clinics, and is used to test for diplopia due to eye muscle dysfunction. Like the Goldmann perimeter, the results of the Tangent Screen method are documented on a Goldmann chart recording sheet, which plots areas of diplopia across the major visual fields. Furthermore, the results of both tests are relatively similar. See Agnes M.F. Wong, MD, and James A. Sharpe, MD, A Comparison of Tangent Screen, Goldmann, and Humphrey Perimetry in the Detection and Localization of Occipital Lesions, Ophthalmology 1107:527–544 (2000). In order to accommodate more modern and readily available methods, VA proposes to amend § 4.78(a) to allow for measurement of muscle function using either Goldmann perimeters or Tangent Screen method.

Current § 4.78(a) requires examiners to plot the results of muscle function testing on a standard Goldmann chart and include the chart with the examination report. VA proposes to remove these requirements for the same reasons indicated in the section above discussing proposed changes to § 4.77. Under the proposed change, an examination of muscle function is sufficient for rating purposes if it identifies the quadrant(s) and range(s) of degrees in which diplopia exists.

No other changes to § 4.78 are proposed.

III. § 4.79 Schedule of Ratings—Eye

Current § 4.79 contains a General Rating Formula for Diagnostic Codes 6000 through 6009. This formula evaluates disease of the eye on the basis of incapacitating episodes or visual impairment (impairment of visual acuity, visual field, and/or muscle function), whichever provides the highest evaluation. Currently, ''incapacitating episodes'' is defined as a period of acute symptoms severe enough to require prescribed bed rest and treatment by a physician or other healthcare provider. This definition provides limited applicability of the rating formula as bed rest is no longer a uniformly valid method of treatment, nor is it a pertinent domain in the field of disability criteria. R.I. Cho & E. Savitsky, Ocular Trauma, Combat Casualty Care: Lessons Learned from OEF and OIF, 299 (M. Lenhart ed. 2012). Limiting the definition to bed rest categorically excludes periods of incapacitation due to eye disease requiring intensive treatment and medical management other than bed rest, as well as the potential for development of medical complications. Therefore, VA proposes to update the definition of an incapacitating episode to mean an episode that requires clinic visits for treatment for an active eye disease.

Through its definition, VA intends to require that these visits be documented in the medical record by a physician or other health care provider and that such visits must relate to the monitoring of progress, administration of treatment(s), and the development of complications related to the underlying active eye disability. Incorporating documented treatment allows for consideration of intensive interventional care, the use of complex drugs, and the placement of devices when evaluating the severity of a given eye disability. By providing evaluations based on the duration of treatment for an active eye disease, the proposed criteria more accurately reflect occupational disruption and impairment due to eye diseases that do not necessarily involve measurable visual impairment. This updated definition of incapacitating episodes aligns with modern medical practice and the treatment of eye diseases, providing an alternative basis for evaluation of eye disabilities in the absence of visual impairment. VA also proposes to add a non-exhaustive list of examples of treatment to the definition of incapacitating episodes. This list would clarify the evaluation criteria to claims processors and ease application of the rating schedule by indicating possible treatment options for the various eye diseases.

VA proposes a 60 percent evaluation for documented incapacitating episodes requiring 10 or more medical visits for monitoring or treatment of an active eye disease or complications per year. A 40 percent evaluation is proposed for documented incapacitating episodes requiring at least 7 but no more than 9 medical visits for monitoring or treatment of an active eye disease or complications per year. A 20 percent evaluation is proposed for documented incapacitating episodes requiring at least 4 but no more than 6 medical visits for monitoring or treatment of an active eye disease or complications per year. VA proposes a 10 percent evaluation for documented incapacitating episodes requiring 3 medical visits for monitoring or treatment of an active eye disease or complications per year.

VA would add a note to § 4.79 that would refer raters, when evaluating visual impairment due to the particular condition, to 38 CFR 4.75–4.78 and to § 4.79, diagnostic codes 6061–6090.

A. Diseases of the Eye—Organizational Headings

The current schedule of ratings for the eye contains one general category for Diseases of the Eye with a limited listing of diagnoses and/or disabilities. This category does not organize the listed disabilities in a manner that represents the current scientific understanding of the specific anatomy of the eye, etiology of the disease, or the disabling effect of the disease itself. When presented with a diagnosis that is not listed in the rating schedule, claims processors must rate by analogy to a listed diagnosis.

Section 4.27 directs claims processors to analogize these disabilities on the basis of disease similarity and residual disability to allow for easy identification of the source of each rating. However, it is specifically noted that ''the diagnostic terminology will be that of the medical examiner, with no attempt to translate the terms into schedule nomenclature.'' Id. In other words, the determination of disease type and residual disability is to be made by a medical professional; the claims processor should not partake in any type of medical determination when deciding how to rate analogously.

In order to ease the use of analogous codes when evaluating eye diseases, VA proposes to organize the Diseases of the Eye into nine categories. These diagnostic categories organize the listed disabilities into medically logical sets on the basis of diagnostic criteria, anatomical location, and disease etiology. By grouping disabilities according to medical criteria, the categories would ease the use of analogous coding by claims processors. Additionally, the categories would allow VA to track the use of analogous codes with more specificity, providing data on the need for inclusion of new disabilities in future revisions to the VASRD.

All disabilities contained in § 4.79 would be evaluated under the General Rating Formula for Diseases of the Eye unless otherwise directed. The organizational categories and specific diagnostic codes within each category are as follows:

B. Diseases of the Uveal Tract

The uveal tract consists of three eye structures: the iris, the ciliary body, and the choroid. This category of conditions includes infections, inflammations including Tuberculosis of the eye (DC 6010) and other diseases involving these three structures of the eye. This category would include the following diagnostic codes (DCs): DC 6000, choroidopathy, including uveitis, iritis, cyclitis, and choroiditis; and DC 6002, scleritis. VA proposes to continue evaluating both conditions under the General Rating Formula for Diseases of the Eye, as amended above.

C. Diseases of the Retina, Macula, and Vitreous

The retina is the inner layer of the eye, containing blood vessels and nerve structures that connect the eye with the optic nerve and brain. The retina participates in light, motion, and color perception and image formation. The macula is the visual center of the eye and contains receptors that perceive light and color. Vitreous is the thick, transparent substance that fills the eye, providing it with volume and shape. This category includes the following diagnostic codes:

1. Diagnostic Code 6006

Current DC 6006 addresses retinopathy or maculopathy. VA proposes to clarify this code as ''not otherwise specified,'' as new DCs are proposed to capture other specified types of retinopathy. If the retinopathy diagnosed is not one of the other specified diagnoses, it will be evaluated as DC 6006. This condition would continue to be evaluated under the General Rating Formula for Diseases of the Eye.

2. Diagnostic Code 6008

VA proposes to continue evaluating this condition, detachment of the retina, under the General Rating Formula for Diseases of the Eye. VA proposes no other changes to this diagnostic code.

3. Diagnostic Code 6011

Current DC 6011 instructs claims processors to evaluate retinal scars, atrophy, or irregularities as 10 percent disabling if such scars, etc., are centrally located and result in an irregular, duplicated, enlarged, or diminished image. Alternatively, claims processors may evaluate based on visual impairment. VA proposes to further expand this alternate rating criteria by directing claims processors to evaluate this condition under the General Rating Formula for Diseases of the Eye if this would result in a higher evaluation. In other words, the only change to the diagnostic code is to allow this condition to be evaluated on the basis of ''incapacitating episodes,'' in addition to visual impairment or the nature of the scar, atrophy, or irregularity itself.

4. New Diagnostic Code 6040

VA proposes to add a new DC 6040, titled ''Diabetic retinopathy,'' in order to account for retinal impairment specifically caused by diabetes in the Veteran population. Visual impairment is a common complication of diabetes mellitus. Diabetes is the most significant cause of visual impairment and blindness in the United States in working age adults. James Orcutt et al., Eye Disease in Veterans with Diabetes, 27 Diabetes Care B50 (2004). Epidemiologic studies of diabetic retinopathy show that 15 years after the onset of diabetes, retinopathy appears in 97 percent of patients with type 1 diabetes, 80 percent of type 2 diabetes treated with insulin, and 55 percent of type 2 diabetes treated without insulin. Id. The most severe form of retinopathy (proliferative) was evident 15 years after the initial diagnosis of diabetes in 30 percent of cases with type 1 diabetes, in 15 percent of those with type 2 diabetes treated with insulin, and in 5 percent of those not treated with insulin. Id. Of 429,918 patients treated at the VA hospital with diabetes in 1998, 9.5 percent developed proliferative retinopathy related to diabetes. In addition, the study noted that diabetic veterans with lower-extremity amputations have an increased risk for developing diabetic retinopathy. Id. at 52.

Currently, this condition is evaluated under DC 6006 (retinopathy or maculopathy) without any method of identifying those cases caused by diabetes. Given the significance of diabetes in the Veteran population and the likelihood of developing this related eye disease, VA proposes to add a separate diagnostic code to properly track and evaluate the Veteran population with diabetic retinopathy. VA proposes to continue evaluating this condition under the General Rating Formula for Diseases of the Eye.

5. New Diagnostic Code 6042

VA proposes to add a new DC 6042, titled ''Retinal dystrophy (including retinitis pigmentosa),'' in order to account for impairment due to this condition in the Veteran population. Retinal dystrophy is an important and growing group of disorders that cause blindness. Included within the larger group of retinal dystrophy is retinitis pigmentosa, perhaps the best known and most commonly recognized condition. While retinitis pigmentosa is hereditary, the onset of symptoms may be delayed until early adult years, meaning impairment may not manifest until well after an individual has begun his or her military service. In certain situations, disability compensation can be provided to Veterans with this condition when the symptoms first manifest themselves during active duty military service. To reinforce the potential for service-connection for these disabilities, VA proposes to add a specific diagnostic code for these conditions.

In retinitis pigmentosa there is a gradual loss of the eye photoreceptors (rods and cones) with a deposition of pigment caused by involutional changes of the cells of the retinal pigment epithelium layer. Retinitis pigmentosa, A.D.A.M. Medical Encyclopedia, PubMed Health, U.S. National Library of Medicine, *http://www.ncbi.nlm.nih.gov/pubmedhealth/PMH0002024/* (last visited Apr. 29, 2014). This leads to the gradual onset of night blindness, tripping over objects in the visual periphery due to constricion of the peripheral visual field, tunnel vision, and eventually total blindness. Id. There is currently no known effective treatment for this condition. Id. Given the functional effects of this disability, VA proposes to evaluate this condition under the General Rating Formula for Diseases of the Eye, which would allow for rating based on either visual impairment or on incapacitating episodes.

D. Glaucoma

Glaucoma is a group of diseases that can damage the eye's optic nerve and can result in loss of vision. Glaucoma, MayoClinic, *http://www.mayoclinic.org/diseases-conditions/glaucoma/basics/symptoms/con-20024042* (last visited Apr. 29, 2014). The most common types of glaucoma are open-angle glaucoma and angle-closure glaucoma. Id.

Angle closure glaucoma is due to a blockage of the fluid (aqueous humor) drainage canals, causing a rapid and dangerous increase in eye pressure. This is an acute emergency that can lead to permanent visual loss. These conditions can be primary or secondary to an injury, medication, inflammation, tumor, or other medical condition. Id. This category includes the following diagnostic codes:

1. Diagnostic Code 6012

Current DC 6012, angle-closure glaucoma, lists evaluation criteria based on either visual impairment or on incapacitating episodes, whichever results in a higher evaluation. In addition, a minimum 10 percent evaluation is provided for the requirement of continuous medication. For clarity and uniformity with the remainder of § 4.79, VA proposes to include the general instruction to evaluate this disability under the General Rating Formula for Diseases of the Eye with a minimum evaluation of 10 percent when continuous medication is required.

2. Diagnostic Code 6013

Current DC 6013, open-angle glaucoma, states to evaluate on the basis of visual impairment due to this condition. VA proposes to direct evaluation under the General Rating Formula for Diseases of the Eye, which includes evaluation on the basis of visual impairment or incapacitating episodes, whichever provides a higher evaluation. This proposal expands the evaluation criteria to provide an alternative measure of disability outside the realm of visual impairment for this disability, allowing VA to more accurately and adequately capture the disabling effects.

Current DC 6013 also provides a minimum 10 percent evaluation if continuous medication is required for treatment. VA proposes no change to this minimum evaluation.

E. Ocular Neoplasms and Trauma

This category includes current diagnostic codes for neoplasms of the eye (both malingnant and benign) as well as eye traumas. This category includes the following diagnostic codes:

1. Diagnostic Code 6007

VA proposes to continue evaluating DC 6007, intraocular hemorrhage, under the General Rating Formula for Diseases of the Eye. VA proposes no other changes to this diagnostic code.

2. Diagnostic Code 6009

Current DC 6009, unhealed eye injury, includes orbital trauma, as well as penetrating and non-penetrating eye injury. VA proposes to continue evaluating this condition under the General Rating Formula for Diseases of the Eye. VA also proposes to add a note stating that this code includes orbital trauma, as well as penetrating and non-penetrating eye injury. This note would facilitate the identification and recording of significant eye injuries in one DC.

3. Diagnostic Code 6014

Current DC 6014 evaluates malignant neoplasm of the eyeball only. VA proposes to replace the word ''eyeball'' with ''eye'' to conform with modern medical terminology. The preferred nomenclature in medicine for the organ of vision is the eye. While eyeball and eye are used interchangeably, it is customary to use the word eye when referring to diseases or anatomy. American Academy of Ophthalmology, Introducing Ophthalmology: A Primer for Office Staff, 8 (3d ed. 2013). Additionally, VA proposes to clarify that this diagnostic code includes malignant neoplasms of the orbit and adnexa. The most prevalent intraocular malignant neoplasms include uveal melanoma, intraocular lymphoma, and intraocular metastasis. These malignancies affect not only the eyeball, but often involve the orbit and adnexa. To ensure these malignancies are adequately evaluated under the VASRD, VA proposes to clarify that DC 6014 is not limited to neoplasms of the eyeball only. Malignant neoplasms of the skin are still excluded as these are evaluated under current DC 7818 within a different body system. VA proposes no changes to the evaluation criteria for DC 6014.

4. Diagnostic Code 6015

Current DC 6015 evaluates benign neoplasm of the eyeball and adnexa only. VA proposes to replace the word ''eyeball'' with ''eye'' to conform with modern medical terminology. Id. Additionally, VA proposes to expand the applicability of this diagnostic code to include benign neoplasms of the orbit, this includes lid tumors in adults, cavernous hemangioma, dermoid, epidermal cysts and other conditions. By expanding the applicability, the VASRD would provide a specific diagnostic code for the evaluation of benign growths of the orbit and adnexa. Benign neoplasms of the skin are still excluded as these are evaluated under current DC 7819 within a different body system. VA proposes no changes to the evaluation criteria for DC 6015.

F. Conditions of the Lacrimal System

The lacrimal system consists of the lacrimal glands and the nasolacrimal duct. This system is responsible for the secretion and drainage of tears and, when properly functioning, serves to moisten, lubricate, and protect the surface of the eye. Cat N. Burkat MD, and Mark J. Lucarelli MD, Anatomy of the Lacrimal System, The Lacrimal System: Diagnosis, Management, and Surgery, *http://link.springer.com/book/10.1007%2F978-0-387-35267-1*. This category includes DC 6025, which pertains to disorders of the lacrimal apparatus (epiphora, dacrocystitis, etc.). VA proposes no changes to this diagnostic code.

G. Corneal Diseases

The cornea is the eye's outermost layer. It is a clear, dome-shaped surface, overlying the pupil, that covers the front of the eye. Facts About the Cornea and Corneal Disease, National Eye Institute, *http://www.nei.nih.gov/health/cornealdisease/* (last visited Apr. 29, 2014). The cornea functions as a lens which focuses light on the retina. Id. An injury to the cornea generally produces redness, itching, tearing, and, depending on the severity of the injury, pain and blurring of vision. Id. This category includes the following diagnostic codes:

1. Diagnostic Code 6001

VA proposes to continue evaluating DC 6001, keratopathy, under the General Rating Formula for Diseases of the Eye. VA proposes no other changes to this diagnostic code.

2. Diagnostic Codes 6017 and 6018

Current DC 6017 states to evaluate trachomatous conjunctivitis on the basis of visual impairment when this condition is active, with a minimum evaluation of 30 percent. Current DC 6018 states to evaluate chronic conjunctivitis (nontrachomatous) on the basis of visual impairment when this condition is active, with a minimum evaluation of 10 percent.

VA proposes to direct evaluation of active trachomatous and nontrachomatous conjunctivitis under the General Rating Formula for Diseases of the Eye, which includes evaluation on the basis of visual impairment or incapacitating episodes, whichever provides a higher evaluation. This proposal expands the evaluation criteria to provide an alternative measure of disability outside the realm of visual impairment for these disabilities, allowing VA to more accurately and adequately capture the disabling effects. VA proposes to retain the respective minimum evaluations for cases of active conjunctivitis.

Once conjunctivitis (trachomatous or nontrachomatous) is found to be inactive, current DCs 6017 and 6018 state to evaluate based on residuals, including visual impairment or disfigurement under DC 7800. VA proposes no change to these evaluation criteria.

3. Diagnostic Code 6035

Current DC 6035 states to evaluate keratoconus on the basis of visual impairment due to this condition. VA proposes to direct evaluation under the General Rating Formula for Diseases of the Eye, which includes evaluation on the basis of visual impairment or incapacitating episodes, whichever provides a higher evaluation. This proposal expands the evaluation criteria to provide an alternative measure of disability outside the realm of visual impairment for this disability, allowing VA to more accurately and adequately capture the disabling effects.

4. Diagnostic Code 6036

Current DC 6036 states to evaluate status post corneal transplant on the basis of visual impairment due to this condition, with a minimum evaluation of 10 percent in the presence of pain, photophobia, and glare sensitivity. VA proposes to direct evaluation under the General Rating Formula for Diseases of the Eye, which includes evaluation on the basis of visual impairment or incapacitating episodes, whichever provides a higher evaluation. This proposal expands the evaluation criteria to provide an alternative measure of disability outside the realm of visual impairment for this disability, allowing VA to more accurately and adequately capture the disabling effects. VA intends to retain the minimum evaluation of 10 percent in the presence of pain, photophobia, and glare sensitivity.

H. External Eye Diseases, Including the Eyelash, Eyelid, and Eyebrow

The external eye disease category consists of a group of conditions involving the ocular-related structures, which have direct contact with the environment, and includes the eyelids, eyelashes, and eyebrows. While the cornea has direct contact with the environment as well, VA has provided a separate category for diseases of the cornea. The external eye diseases category includes nine conditions of the eyelashes, eyelids, and eyebrows listed in the current VASRD. This category

includes the following diagnostic codes in which no change is proposed to the current evaluation criteria: DC 6020, Ectropion; DC 6021, Entropion; DC 6022, Lagophthalmos; DC 6023, Loss of eyebrows, complete, unilateral or bilateral; DC 6024, Loss of eyelashes, complete, unilateral or bilateral; DC 6032, Loss of eyelids, partial or complete; and DC 6037, Pinguecula. It also includes the following diagnostic codes with specific proposed changes.

Current DC 6034 states to evaluate pterygium on the basis of visual impairment, disfigurement (DC 7800), conjunctivitis (DC 6018), etc., depending on the particular findings. Similarly, current DC 6091 states to evaluate symblepharon on the basis of visual impairment, lagophthalmos (DC 6022), disfigurement (DC 7800), etc., depending on the particular findings.

In both cases, VA proposes to replace the direction to evaluate on the basis of visual impairment with the General Rating Formula for Diseases of the Eye, which includes evaluation on the basis of visual impairment or incapacitating episodes, whichever provides a higher evaluation. This proposal expands the evaluation criteria to provide an alternative measure of disability outside the realm of visual impairment for these disabilities, allowing VA to more accurately and adequately capture the disabling effects. VA also proposes to include the phrase ''and combine in accordance with § 4.25'' to the rating instructions of DCs 6034 and 6091. The current language allows for multiple evaluations to be assigned and combined depending on the particular findings, but it is not entirely clear to the reader. Therefore, this addition would ensure consistency and clarity for field application.

VA proposes no other changes to these diagnostic codes.

I. Disease of the Lens

The lens is a crystalline, transparent structure covered by a capsule and suspended by a ligament that weakens with age. Henry Gray, Anatomy of the Human Body, 1019–20 (20th ed. 1918). The lens capsule is lined in the anterior portion by an epithelium that generates new lens fibers at the equators. Id. In addition to malformation and malposition, the main lens pathology is cataract formation. A cataract is a lens opacity which produces visual impairment by obscuration and altered light refraction. Facts About Cataract, National Eye Institute, *https://www.nei.nih.gov/health/cataract/cataract_facts.asp* (last visited Apr. 29, 2014). This category includes evaluation criteria for DC 6029, Aphakia or dislocation of crystalline lens for which VA proposes no changes. It also includes the following diagnostic codes with specific proposed changes.

Current DC 6027 states to evaluate preoperative cataracts on the basis of visual impairment. VA proposes to direct evaluation of preoperative cataracts under the General Rating Formula for Diseases of the Eye, which includes evaluation on the basis of visual impairment or incapacitating episodes, whichever provides a higher evaluation. This proposal expands the evaluation criteria to provide an alternative measure of disability outside the realm of visual impairment for this disability, allowing VA to more accurately and adequately capture the disabling effects.

Current DC 6027 also provides two evaluation options for postoperative cataracts depending on the presence or absence of a replacement lens. If a replacement lens is present, current DC 6027 states to evaluate on the basis of visual impairment. VA proposes to direct the evaluation of postoperative cataracts with a replacement lens under the General Rating Formula for Diseases of the Eye for the same reasons discussed above. If there is no replacement lens present, current DC 6027 states to evaluate based on aphakia (DC 6029). VA proposes only to insert the applicable DC. No substantive change is proposed.

J. Neuro-Ophthalmic Conditions

This category includes a listing of the most common and pertinent neuro-ophthalmic conditions, to include diseases of the anterior visual pathways, optic nerve disorders, cranial nerve palsies resulting in visual impairment, disorders of eye movements, and pupillary disorders. The field of neuro-ophthalmology bridges the gap between neurology and ophthalmology by providing particular attention to visual impairment due to diseases of the neural structures involved in vision. Since a substantial portion of the brain is involved with vision, many brain disorders produce visual impairment. This category includes the following diagnostic codes in which no change is proposed to the current evaluation criteria: DC 6016, Nystagmus, central; DC 6019, Ptosis, unilateral or bilateral; and DC 6030, Paralysis of accommodation (due to neuropathy of the Oculomotor Nerve (cranial nerve III)). It also includes the following diagnostic code with specific proposes changes.

1. Diagnostic Code 6026

Current DC 6026 states to evaluate optic neuropathy on the basis of visual impairment due to this condition. VA proposes to direct evaluation under the General Rating Formula for Diseases of the Eye, which includes evaluation on the basis of visual impairment or incapacitating episodes, whichever provides a higher evaluation. This proposal expands the evaluation criteria to provide an alternative measure of disability outside the realm of visual impairment for this disability, allowing VA to more accurately and adequately capture the disabling effects.

2. New Diagnostic Code 6046

VA proposes to add a new DC 6046, titled ''Post-chiasmal disorders.'' This category includes a variety of central visual disorders with brain involvement. This category incorporates ophthalmic residuals from traumatic brain injury (TBI) or other causes of cerebral injury, such as infectious, vascular conditions, or degenerative conditions. Post-chiasmal disorders may be associated with cognitive changes caused by the structural or functional alteration of the brain tissue, which are often associated with TBI. See James Garrity MD, Overview of Optic Nerve Disorders, The Merck Manual Home Health Handbook, *http://www.merckmanuals.com/home/eye_disorders/optic_nerve_disorders/overview_of_optic_nerve_disorders.html* (last visited Apr. 29, 2014) (each optic nerve splits at a structure in the brain called the optic chiasm). The alteration can lead to brain dysfunction which can manifest as a variety of visual impairments. Given the increased awareness and understanding of the chronic residuals of TBI in the medical community, particularly amongst the Veteran population, VA proposes this new diagnostic code to provide adequate and proper evaluations for Veterans with post-chiasmal disorders. Due to the varying presentation of post-chiasmal disorders, VA proposes to evaluate these conditions under the General Rating Formula for Diseases of the Eye to maximize the options available for an accurate evaluation.

IV. Technical Amendments

VA also would update Appendix A, B, and C of part 4 to reflect the above noted proposed amendments.

Executive Orders 12866 and 13563

Executive Orders 12866 and 13563 direct agencies to assess the costs and benefits of available regulatory alternatives and, when regulation is necessary, to select regulatory

approaches that maximize net benefits (including potential economic, environmental, public health and safety effects, and other advantages; distributive impacts; and equity). Executive Order 13563 (Improving Regulation and Regulatory Review) emphasizes the importance of quantifying both costs and benefits, reducing costs, harmonizing rules, and promoting flexibility. Executive Order 12866 (Regulatory Planning and Review) defines a ''significant regulatory action,'' which requires review by the Office of Management and Budget (OMB), as ''any regulatory action that is likely to result in a rule that may: (1) Have an annual effect on the economy of $100 million or more or adversely affect in a material way the economy, a sector of the economy, productivity, competition, jobs, the environment, public health or safety, or State, local, or tribal governments or communities; (2) Create a serious inconsistency or otherwise interfere with an action taken or planned by another agency; (3) Materially alter the budgetary impact of entitlements, grants, user fees, or loan programs or the rights and obligations of recipients thereof; or (4) Raise novel legal or policy issues arising out of legal mandates, the President's priorities, or the principles set forth in this Executive Order.''

The economic, interagency, budgetary, legal, and policy implications of this proposed rule have been examined, and it has been determined not to be a significant regulatory action under Executive Order 12866. VA's impact analysis can be found as a supporting document at *http://www.regulations.gov*, usually within 48 hours after the rulemaking document is published. Additionally, a copy of this rulemaking and its impact analysis are available on VA's Web site at *http://www.va.gov/orpm/*, by following the link for ''VA Regulations Published From FY 2004 Through Fiscal Year to Date.''

Regulatory Flexibility Act

The Secretary hereby certifies that this proposed rule would not have a significant economic impact on a substantial number of small entities as they are defined in the Regulatory Flexibility Act, 5 U.S.C. 601–612. This proposed rule would not affect any small entities. Only certain VA beneficiaries could be directly affected. Therefore, pursuant to 5 U.S.C. 605(b), this proposed rule is exempt from the initial and final regulatory flexibility analysis requirements of sections 603 and 604.

Unfunded Mandates

The Unfunded Mandates Reform Act of 1995 requires, at 2 U.S.C. 1532, that agencies prepare an assessment of anticipated costs and benefits before issuing any rule that may result in the expenditure by State, local, and tribal governments, in the aggregate, or by the private sector, of $100 million or more (adjusted annually for inflation) in any one year. This proposed rule would have no such effect on State, local, and tribal governments, or on the private sector.

Paperwork Reduction Act

This proposed rule contains no provisions constituting a collection of information under the Paperwork Reduction Act of 1995 (44 U.S.C. 3501–3521).

Catalog of Federal Domestic Assistance

The Catalog of Federal Domestic Assistance program numbers and titles for this rule are 64.009, Veterans Medical Care Benefits; 64.104, Pension for Non-Service-Connected Disability for Veterans; 64.109, Veterans Compensation for Service-Connected Disability; and 64.110, Veterans Dependency and Indemnity Compensation for Service-Connected Death.

Signing Authority

The Secretary of Veterans Affairs, or designee, approved this document and authorized the undersigned to sign and submit the document to the Office of the Federal Register for publication electronically as an official document of the Department of Veterans Affairs. Robert A. McDonald, Secretary of Veterans Affairs, approved this document on May 10, 2015, for publication.

List of Subjects in 38 CFR Part 4

Disability benefits, Pensions, Veterans.

Approved: June 2, 2015.

William F. Russo,

Acting Director, Office of Regulation Policy & Management.

For the reasons set out in the preamble, VA proposes to amend 38 CFR part 4, subpart B as set forth below:

PART 4—SCHEDULE FOR RATING DISABILITIES

Subpart B—Disability Ratings

■ 1. The authority citation for part 4 continues to read as follows:

Authority: 38 U.S.C. 1155, unless otherwise noted.

■ 2. Amend § 4.77 by revising paragraph (a) to read as follows:

§ 4.77 Visual fields.

(a) *Examination of visual fields.* Examiners must use either Goldmann kinetic perimetry or automated perimetry using Humphrey Model 750, Octopus Model 101, or later versions of these perimetric devices with simulated kinetic Goldmann testing capability. For phakic (normal) individuals, as well as for pseudophakic or aphakic individuals who are well adapted to intraocular lens implant or contact lens correction, visual field examinations must be conducted using a standard target size and luminance, which is Goldmann's equivalent III/4e. For aphakic individuals not well adapted to contact lens correction or pseudophakic individuals not well adapted to intraocular lens implant, visual field examinations must be conducted using Goldmann's equivalent IV/4e. The examiner must document the results for at least 16 meridians 22½ degrees apart for each eye and indicate the Goldmann equivalent used. See Table III for the normal extent (in degrees) of the visual fields at the 8 principal meridians (45 degrees apart). When the examiner indicates that additional testing is necessary to evaluate visual fields, the additional testing must be conducted using either a tangent screen or a 30-degree threshold visual field with the Goldmann III stimulus size. The examination report must document the results of either the tangent screen or of the 30-degree threshold visual field with the Goldmann III stimulus size.

* * * * *

■ 3. Amend § 4.78 by revising paragraph (a) to read as follows:

§ 4.78 Muscle function.

(a) *Examination of muscle function.* The examiner must use a Goldmann perimeter chart or the Tangent Screen method that identifies the four major quadrants (upward, downward, left and right lateral) and the central field (20 degrees or less) (see Figure 2). The examiner must document the results of muscle function testing by identifying the quadrant(s) and range(s) of degrees in which diplopia exists.

* * * * *

■ 4. Amend § 4.79 Schedule of ratings—eye by revising the tables Diseases of the Eye and *Ratings for Impairment of Muscle Function* to read as follows:

DISEASES OF THE EYE

	Rating
Unless otherwise directed, evaluate diseases of the eye under the General Rating Formula for Diseases of the Eye.	
General Rating Formula for Diseases of the Eye:	
Evaluate on the basis of either visual impairment due to the particular condition or on incapacitating episodes, whichever results in a higher evaluation.	
With documented incapacitating episodes requiring 10 or more medical visits for monitoring or treatment of an active eye disease or complications per year	60
With documented incapacitating episodes requiring at least 7 but no more than 9 medical visits for monitoring or treatment of an active eye disease or complications per year	40
With documented incapacitating episodes requiring at least 4 but no more than 6 medical visits for monitoring or treatment of an active eye disease or complications per year	20
With documented incapacitating episodes requiring 3 medical visits for monitoring or treatment of an active eye disease or complications per year	10
Note (1): For the purposes of evaluation under 38 CFR 4.79, an incapacitating episode is one which requires clinic visits for an active eye disease, as documented in the medical record by a physician or other health care provider, and relates to the monitoring of progress, administration of treatment(s), and to the development of complications related to the underlying active eye disability. Examples of treatment may include but are not limited to: Systemic immunosuppressants or biologic agents; intravitreal or periocular injections; laser treatments; or other surgical interventions.	
Note (2): For the purposes of evaluating visual impairment due to the particular condition, refer to 38 CFR 4.75–4.78 and to § 4.79, diagnostic codes 6061–6090.	
Diseases of the Uveal Tract	
6000 Choroidopathy, including uveitis, iritis, cyclitis, and choroiditis.	
6002 Scleritis.	
6010 Tuberculosis of the eye:	
Active	100
Inactive: Evaluate under § 4.88c or § 4.89 of this part, whichever is appropriate.	
Diseases of the Retina, Macula, and Vitreous	
6006 Retinopathy or maculopathy not otherwise specified.	
6008 Detachment of retina.	
6011 Retinal scars, atrophy, or irregularities:	
Localized scars, atrophy, or irregularities of the retina, unilateral or bilateral, that are centrally located and that result in an irregular, duplicated, enlarged, or diminished image	10
Alternatively, evaluate based on the General Rating Formula for Diseases of the Eye, if this would result in a higher evaluation.	
6040 Diabetic retinopathy.	
6042 Retinal dystrophy (including retinitis pigmentosa).	
Glaucoma	
6012 Angle-closure glaucoma.	
Evaluate under the General Rating Formula for Diseases of the Eye. Minimum evaluation if continuous medication is required	10
6013 Open-angle glaucoma.	
Evaluate under the General Rating Formula for Diseases of the Eye. Minimum evaluation if continuous medication is required	10
Ocular Neoplasms and Trauma	
6007 Introacular hemorrhage.	
6009 Unhealed eye injury.	
Note: This code includes orbital trauma, as well as penetrating and non-penetrating eye injury.	
6014 Malignant neoplasms of the eye, orbit, and adnexa (excluding skin):	
Malignant neoplasms of the eye, orbit, and adnexa (excluding skin) that require therapy that is comparable to those used for systemic malignancies, i.e., systemic chemotherapy, X-ray therapy more extensive than to the area of the eye, or surgery more extensive than enucleation	100
Note: Continue the 100-percent rating beyond the cessation of any surgical, X-ray, antineoplastic chemotherapy or other therapeutic procedure. Six months after discontinuance of such treatment, the appropriate disability rating will be determined by mandatory VA examination. Any change in evaluation based upon that or any subsequent examination will be subject to the provisions of § 3.105(e) of this chapter. If there has been no local recurrence or metastasis, evaluate based on residuals.	
Malignant neoplasm of the eye, orbit, and adnexa (excluding skin) that does not require therapy comparable to that for systemic malignancies:	
Separately evaluate visual impairment and nonvisual impairment, e.g., disfigurement (diagnostic code 7800), and combine the evaluations.	
6015 Benign neoplasms of the eye, orbit, and adnexa (excluding skin):	
Separately evaluate visual impairment and nonvisual impairment, e.g., disfigurement (diagnostic code 7800), and combine the evaluations.	
Conditions of the Lacrimal System	
6025 Disorders of the lacrimal apparatus (epiphora, dacrocystitis, etc.):	
Bilateral	20
Unilateral	10

DISEASES OF THE EYE—Continued

	Rating
Corneal Diseases	
6001 Keratopathy.	
6017 Trachomatous conjunctivitis:	
Active: Evaluate under the General Rating Formula for Diseases of the Eye, minimum rating	30
Inactive: Evaluate based on residuals, such as visual impairment and disfigurement (diagnostic code 7800).	
6018 Chronic conjunctivitis (nontrachomatous):	
Active: Evaluate under the General Rating Formula for Diseases of the Eye, minimum rating	10
Inactive: Evaluate based on residuals, such as visual impairment and disfigurement (diagnostic code 7800).	
6035 Keratoconus.	
6036 Status post corneal transplant:	
Rate under the General Rating Formula for Diseases of the Eye.	
Minimum, if there is pain, photophobia, and glare sensitivity	10
External Eye Diseases, Including the Eyelash, Eyelid, and Eyebrow	
6020 Ectropion:	
Bilateral	20
Unilateral	10
6021 Entropion:	
Bilateral	20
Unilateral	10
6022 Lagophthalmos:	
Bilateral	20
Unilateral	10
6023 Loss of eyebrows, complete, unilateral or bilateral	10
6024 Loss of eyelashes, complete, unilateral or bilateral	10
6032 Loss of eyelids, partial or complete:	
Separately evaluate both visual impairment due to eyelid loss and nonvisual impairment, e.g., disfigurement (diagnostic code 7800), and combine the evaluations.	
6034 Pterygium:	
Evaluate under the General Rating Formula for Diseases of the Eye, disfigurement (diagnostic code 7800), conjunctivitis (diagnostic code 6018), etc., depending on the particular findings, and combine in accordance with § 4.25.	
6037 Pinguecula:	
Evaluate based on disfigurement (diagnostic code 7800).	
6091 Symblepharon:	
Evaluate under the General Rating Formula for Diseases of the Eye, lagophthalmos (diagnostic code 6022), disfigurement (diagnostic code 7800), etc., depending on the particular findings, and combine in accordance with § 4.25.	
Disease of the Lens	
6027 Cataract:	
Preoperative: Evaluate under the General Rating Formula for Diseases of the Eye.	
Postoperative: If a replacement lens is present (pseudophakia), evaluate under the General Rating Formula for Diseases of the Eye. If there is no replacement lens, evaluate based on aphakia (diagnostic code 6029).	
6029 Aphakia or dislocation of crystalline lens:	
Evaluate based on visual impairment, and elevate the resulting level of visual impairment one step.	
Minimum (unilateral or bilateral)	30
Neuro-Ophthalmic Conditions	
6016 Nystagmus, central	10
6019 Ptosis, unilateral or bilateral:	
Evaluate based on visual impairment or, in the absence of visual impairment, on disfigurement (diagnostic code 7800).	
6026 Optic neuropathy: Evaluate under the General Rating Formula for Diseases of the Eye.	
6030 Paralysis of accommodation (due to neuropathy of the Oculomotor Nerve (cranial nerve III))	20
6046 Post-chiasmal disorders: Evaluate under the General Rating Formula for Diseases of the Eye.	

RATINGS FOR IMPAIRMENT OF MUSCLE FUNCTION

Degree of diplopia	Equivalent visual acuity
6090 Diplopia (double vision):	
(a) Central 20 degrees	5/200
(b) 21 degrees to 30 degrees	(1.5/60)
(1) Down	
(2) Lateral	15/200
(3) Up	(4.5/60)
(c) 31 degrees to 40 degrees	20/100
(1) Down	(6/30)
(2) Lateral	20/70 (6/21)

RATINGS FOR IMPAIRMENT OF MUSCLE FUNCTION—Continued

Degree of diplopia	Equivalent visual acuity
(3) Up	
Note: In accordance with 38 CFR 4.31, diplopia that is occasional or that is correctable with spectacles is evaluated at 0 percent	20/200 (6/60) 20/70 (6/21) 20/40 (6/12)

(Authority: 38 U.S.C. 1155).

■ 5. In Appendix A to Part 4, add §§ 4.77, 4.78, and 4.79 to read as follows:

APPENDIX A TO PART 4—TABLE OF AMENDMENTS AND EFFECTIVE DATES SINCE 1946

Sec.	Diagnostic code No.	
*	*	* * * * *
4.77		Revised [*insert effective date of final rule*].
4.78		Revised [*insert effective date of final rule*].
4.79		Introduction criterion [*insert effective date of final rule*]; Revised General Rating Formula for Diseases of the Eye [*insert effective date of final rule*]; General Rating Formula for Diseases of the Eye NOTE revised [*insert effective date of final rule*]; Organizational categories added [*insert effective date of final rule*].
	6000	Criterion [*insert effective date of final rule*].
	6001	Criterion [*insert effective date of final rule*].
	6002	Criterion [*insert effective date of final rule*].
	6006	Title [*insert effective date of final rule*]; criterion [*insert effective date of final rule*].
	6007	Criterion [*insert effective date of final rule*].
	6008	Criterion [*insert effective date of final rule*].
	6009	Criterion [*insert effective date of final rule*].
	6011	Evaluation [*insert effective date of final rule*].
	6012	Evaluation [*insert effective date of final rule*].
	6013	Evaluation [*insert effective date of final rule*].
	6014	Title [*insert effective date of final rule*].
	6015	Title [*insert effective date of final rule*].
	6017	Evaluation [*insert effective date of final rule*].
	6018	Evaluation [*insert effective date of final rule*].
	6019	Evaluation [*insert effective date of final rule*].
	6026	Evaluation [*insert effective date of final rule*].
	6027	Evaluation [*insert effective date of final rule*].
	6034	Evaluation [*insert effective date of final rule*].
	6035	Evaluation [*insert effective date of final rule*].
	6036	Evaluation [*insert effective date of final rule*].
	6040	Added [*insert effective date of final rule*].
	6042	Added [*insert effective date of final rule*].
	6046	Added [*insert effective date of final rule*].
	6091	Evaluation [*insert effective date of final rule*].
*	*	* * * * *

■ 6. In Appendix B to Part 4, The Eye, Diseases of the Eye, revise diagnostic codes 6000, 6003–6005, 6006–6009, 6011–15, 6017–6018, 6026–6027, 6034–6036, and add diagnostic codes 6040, 6042, and 6046 to read as follows:

APPENDIX A TO PART 4—NUMERICAL INDEX OF DISABILITIES

Diagnostic code No.	
* * * * *	
THE EYE	
Diseases of the Eye	
* * * * *	
6000	Choroidopathy, including uveitis, iritis, cyclitis, and choroiditis.
6001	Keratopathy.
6002	Scleritis.
6006	Retinopathy or maculopathy not otherwise specified.
6007	Intraocular hemorrhage.
6008	Detachment of retina.
6009	Unhealed eye injury.
6010	Tuberculosis of eye.
6011	Retinal scars, atrophy, or irregularities.
6012	Angle-closure glaucoma.
6013	Open-angle glaucoma.
6014	Malignant neoplasms of the eye, orbit, and adnexa (excluding skin).
6015	Benign neoplasms of the eye, orbit, and adnexa (excluding skin).
* * * * *	
6025	Disorders of the lacrimal apparatus (epiphora, dacrocystitis, etc.)
6026	Optic neuropathy.
6027	Cataract.
* * * * *	
6034	Pterygium.
6035	Keratoconus.
6036	Status post corneal transplant.
* * * * *	
6040	Diabetic retinopathy.
6042	Retinal dystrophy (including retinitis pigmentosa).
6046	Post-chiasmal disorders.
* * * * *	

■ 7. In Appendix C to Part 4, revise the disability entries for diagnostic codes 6006, 6014, and 6015, and add disability entries for Retinopathy, diabetic; Retinal dystrophy (including retinitis pigmentosa); and Post-chiasmal disorders to read as follows:

APPENDIX C TO PART 4—ALPHABETICAL INDEX OF DISABILITIES

	Diagnostic code No.
* * * * *	
New growths:	
Benign	

APPENDIX C TO PART 4—ALPHABETICAL INDEX OF DISABILITIES—Continued

	Diagnostic code No.
* * * * *	
Eye, orbit, and adnexa	6015
* * * * *	
Eye, orbit, and adnexa	6014
* * * * *	
Post-chiasmal disorders	6046
* * * * *	
Retinal dystrophy (including retinitis pigmentosa)	6042
Retinopathy, diabetic	6040
Retinopathy or maculopathy not otherwise specified	6006
* * * * *	

[FR Doc. 2015–13788 Filed 6–8–15; 8:45 am]

BILLING CODE 8320–01–P

ENVIRONMENTAL PROTECTION AGENCY

40 CFR Part 52

[EPA–R03–OAR–2015–0311; FRL–9928–67–Region 3]

Approval and Promulgation of Air Quality Implementation Plans; Pennsylvania; 2011 Lead Base Year Emissions Inventory

AGENCY: Environmental Protection Agency (EPA).

ACTION: Proposed rule.

SUMMARY: The Environmental Protection Agency (EPA) proposes to approve the State Implementation Plan (SIP) revision submitted by the Commonwealth of Pennsylvania regarding the 2011 lead base year emissions inventory. The base year emissions inventory SIP revision was submitted to meet the requirements of the Clean Air Act (CAA) for the Lyons 2008 lead National Ambient Air Quality Standards (NAAQS) nonattainment area (hereafter referred to as the ''Lyons Area'' or ''Area''). In the Rules and Regulations section of this **Federal Register**, EPA is approving the Commonwealth's SIP submittal as a direct final rule without prior proposal because the Agency views this as a noncontroversial submittal and anticipates no adverse comments. A more detailed description of the SIP submittal and EPA's evaluation is included in a Technical Support Document (TSD) prepared in support of this rulemaking action. A copy of the TSD is available, upon request, from the EPA Regional Office listed in the **ADDRESSES** section of this document or is also available electronically within the Docket for this rulemaking action. If no adverse comments are received in response to this action, no further activity is contemplated. If EPA receives adverse comments, the direct final rule will be withdrawn and all public comments received will be addressed in a subsequent final rule based on this proposed rule. EPA will not institute a second comment period. Any parties interested in commenting on this action should do so at this time.

DATES: Comments must be received in writing by July 9, 2015.

ADDRESSES: Submit your comments, identified by Docket ID Number EPA–R03–OAR–2015–0311 by one of the following methods:

A. *www.regulations.gov.* Follow the on-line instructions for submitting comments.

B. Email: *fernandez.cristina@epa.gov.*

C. Mail: EPA–R03–OAR–2015–0311, Cristina Fernandez, Associate Director, Office of Air Program Planning, Mailcode 3AP30, U.S. Environmental Protection Agency, Region III, 1650 Arch Street, Philadelphia, Pennsylvania 19103.

D. Hand Delivery: At the previously-listed EPA Region III address. Such deliveries are only accepted during the Docket's normal hours of operation, and special arrangements should be made for deliveries of boxed information.

Instructions: Direct your comments to Docket ID No. EPA–R03–OAR–2015–0311. EPA's policy is that all comments received will be included in the public docket without change, and may be made available online at *www.regulations.gov,* including any personal information provided, unless the comment includes information claimed to be Confidential Business Information (CBI) or other information whose disclosure is restricted by statute. Do not submit information that you consider to be CBI or otherwise protected through *www.regulations.gov* or email. The *www.regulations.gov* Web site is an ''anonymous access'' system, which means EPA will not know your identity or contact information unless you provide it in the body of your comment. If you send an email comment directly to EPA without going through *www.regulations.gov,* your email address will be automatically captured and included as part of the comment that is placed in the public docket and made available on the

Internet. If you submit an electronic comment, EPA recommends that you include your name and other contact information in the body of your comment and with any disk or CD–ROM you submit. If EPA cannot read your comment due to technical difficulties and cannot contact you for clarification, EPA may not be able to consider your comment. Electronic files should avoid the use of special characters, any form of encryption, and be free of any defects or viruses.

Docket: All documents in the electronic docket are listed in the *www.regulations.gov* index. Although listed in the index, some information is not publicly available, *i.e.,* CBI or other information whose disclosure is restricted by statute. Certain other material, such as copyrighted material, is not placed on the Internet and will be publicly available only in hard copy form. Publicly available docket materials are available either electronically in *www.regulations.gov* or in hard copy during normal business hours at the Air Protection Division, U.S. Environmental Protection Agency, Region III, 1650 Arch Street, Philadelphia, Pennsylvania 19103. Copies of the submittal are available at the Pennsylvania Department of Environmental Protection, Bureau of Air Quality Control, P.O. Box 8468, 400 Market Street, Harrisburg, Pennsylvania 17105.

FOR FURTHER INFORMATION CONTACT: Ellen Schmitt, (215) 814–5787, or by email at *schmitt.ellen@epa.gov.*

SUPPLEMENTARY INFORMATION: For further information, please see the information provided in the direct final action with the same title, ''Approval and Promulgation of Air Quality Implementation Plans; Pennsylvania; 2011 Lead Base Year Emissions Inventory,'' that is located in the ''Rules and Regulations'' section of this **Federal Register** publication.

Dated: May 20, 2015.

William C. Early,

Acting Regional Administrator, Region III.

[FR Doc. 2015–13946 Filed 6–8–15; 8:45 am]

BILLING CODE 6560–50–P

Notices

Federal Register

Vol. 80, No. 110

Tuesday, June 9, 2015

This section of the FEDERAL REGISTER contains documents other than rules or proposed rules that are applicable to the public. Notices of hearings and investigations, committee meetings, agency decisions and rulings, delegations of authority, filing of petitions and applications and agency statements of organization and functions are examples of documents appearing in this section.

DEPARTMENT OF AGRICULTURE

Submission for OMB Review; Comment Request

June 3, 2015.

The Department of Agriculture has submitted the following information collection requirement(s) to OMB for review and clearance under the Paperwork Reduction Act of 1995, Public Law 104–13. Comments regarding (a) whether the collection of information is necessary for the proper performance of the functions of the agency, including whether the information will have practical utility; (b) the accuracy of the agency's estimate of burden including the validity of the methodology and assumptions used; (c) ways to enhance the quality, utility and clarity of the information to be collected; (d) ways to minimize the burden of the collection of information on those who are to respond, including through the use of appropriate automated, electronic, mechanical, or other technological collection techniques and other forms of information technology.

Comments regarding this information collection received by July 9, 2015 will be considered. Written comments should be addressed to: Desk Officer for Agriculture, Office of Information and Regulatory Affairs, Office of Management and Budget (OMB), New Executive Office Building, 725–17th Street NW., Washington, DC, 20503. Commentors are encouraged to submit their comments to OMB via email to: *OIRA_Submission@omb.eop.gov* or fax (202) 395–5806 and to Departmental Clearance Office, USDA, OCIO, Mail Stop 7602, Washington, DC 20250–7602. Copies of the submission(s) may be obtained by calling (202) 720–8681.

An agency may not conduct or sponsor a collection of information unless the collection of information displays a currently valid OMB control number and the agency informs potential persons who are to respond to the collection of information that such persons are not required to respond to the collection of information unless it displays a currently valid OMB control number.

Forest Service

Title: Grazing Permit Administration Forms.

OMB Control Number: 0596–0003.

Summary of Collection: Domestic livestock grazing occurs on approximately 92 million acres of National Forest Service (NFS) lands. This grazing is subject to authorization and administrative oversight by the Forest Service (FS). The information is required for the issuance and administration of grazing permits, including fee collections, on NFS land as authorized by the Federal Land Policy and Management Act 1976, as amended, and subsequent Secretary of Agriculture Regulation 5 U.S. C. 301, 36 CFR 222, subparts A and C. The bills for collection of grazing fees are based on the number of domestic livestock grazed on national forest lands and are a direct result of issuance of the grazing permit. Information must be collected on an individual basis and is collected through the permit issuance and administration process. FS will collect information using several forms.

Need and Use of the Information: FS will collect information on the ownership or control of livestock and base ranch property and the need for additional grazing to round out year long ranching operations. FS uses the information collected in administering the grazing use program on NFS land. If information were not collected it would be impossible for the agency to administer a grazing use program in accordance with the statutes and regulations.

Description of Respondents: Farms; business or other for-profit; individuals or households.

Number of Respondents: 1,361.

Frequency of Responses: Reporting: Annually; Other (as needed basis).

Total Burden Hours: 529.

Charlene Parker,

Departmental Information Collection Clearance Officer.

[FR Doc. 2015–13994 Filed 6–8–15; 08:45 am]

BILLING CODE 3411–15–P

DEPARTMENT OF AGRICULTURE

National Agricultural Statistics Service

Notice of Intent To Request Revision and Extension of a Currently Approved Information Collection

AGENCY: National Agricultural Statistics Service, USDA.

ACTION: Notice and request for comments.

SUMMARY: In accordance with the Paperwork Reduction Act of 1995 this notice announces the intention of the National Agricultural Statistics Service (NASS) to request revision and extension of a currently approved information collection, the Stocks Reports. Revision to burden hours will be needed due to changes in the size of the target population, sampling design, and/or questionnaire length.

DATES: Comments on this notice must be received by August 10, 2015 to be assured of consideration.

ADDRESSES: You may submit comments, identified by docket number 0535–0007, by any of the following methods:

- *Email: OMBofficer@nass.usda.gov.* Include docket number above in the subject line of the message.
- *E-fax:* (855) 838–6382.
- *Mail:* Mail any paper, disk, or CD–ROM submissions to: David Hancock, NASS Clearance Officer, U.S. Department of Agriculture, Room 5336 South Building, 1400 Independence Avenue SW., Washington, DC 20250–2024.
- *Hand Delivery/Courier:* Hand deliver to: David Hancock, NASS Clearance Officer, U.S. Department of Agriculture, Room 5336 South Building, 1400 Independence Avenue SW., Washington, DC 20250–2024.

FOR FURTHER INFORMATION CONTACT: R. Renee Picanso, Associate Administrator, National Agricultural Statistics Service, U.S. Department of Agriculture, (202) 720–4333. Copies of this information collection and related instructions can be obtained without charge from David Hancock, NASS–OMB Clearance Officer, at (202) 690–2388 or at *ombofficer@nass.usda.gov.*

SUPPLEMENTARY INFORMATION:

Title: Stocks Reports.

OMB Control Number: 0535—0007.

Expiration Date of Approval: January 31, 2016.

Type of Request: Intent to Seek Approval to Revise and Extend an Information Collection for 3 years.

Abstract: The primary objective of the National Agricultural Statistics Service is to prepare and issue State and national estimates of crop and livestock production, stocks, disposition, and prices

The *Stocks Report* surveys provide estimates of stocks of grains, hops, oilseeds, peanuts, potatoes, and rice that are stored off-farm. These off-farm stocks are combined with on-farm stocks to estimate stocks in all positions. The grain S*tocks Reports* are a principle economic indicator as defined by OMB. Stocks statistics are used by the U.S. Department of Agriculture to help administer programs; by State agencies to develop, research, and promote the marketing of products; and by producers and buyers to find their best market opportunity(s). The *Stocks Reports* are instrumental in providing timely, accurate data to help grain market participants. Since the previous approval, NASS has made several changes that have resulted in a significant reduction in number of respondents contacted and the overall respondent burden. The potato stocks survey was changed from a monthly survey to a quarterly survey. The potato price survey has been dropped from this renewal. The sample size for the off-farm grain and oilseed operations has been decreased by approximately 500 operations (quarterly), due to mergers of some operations and improved sampling of operations by NASS.

The current expiration date for this docket is January 31, 2016. NASS intends to request that the survey be approved for another 3 years.

Authority: These data will be collected under the authority of 7 U.S.C. 2204(a). Individually identifiable data collected under this authority are governed by Section 1770 of the Food Security Act of 1985 as amended, 7 U.S.C. 2276, which requires USDA to afford strict confidentiality to non-aggregated data provided by respondents. This Notice is submitted in accordance with the Paperwork Reduction Act of 1995, Public Law 104–13 (44 U.S.C. 3501, *et seq.*), and Office of Management and Budget regulations at 5 CFR part 1320.

NASS also complies with OMB Implementation Guidance, ''Implementation Guidance for Title V of the E-Government Act, Confidential Information Protection and Statistical Efficiency Act of 2002 (CIPSEA),'' **Federal Register**, Vol. 72, No. 115, June 15, 2007, p. 33362.

Estimate of Burden: This information collection comprises 11 individual surveys that are conducted either 1, 4, 5, or 12 times a year for an estimated total of 23,000 responses. Average reporting burden for this collection of information ranges from 10 to 25 minutes per response.

Respondents: Farms and businesses.

Estimated Number of Respondents: 6,700.

Estimated Total Annual Burden on Respondents: 6,500 hours.

Comments: Comments are invited on: (a) Whether the proposed collection of information is necessary for the proper performance of the functions of the agency, including whether the information will have practical utility; (b) the accuracy of the agency's estimate of the burden of the proposed collection of information, including the validity of the methodology and assumptions used; (c) ways to enhance the quality, utility, and clarity of the information to be collected; and (d) ways to minimize the burden of the collection of information on those who are to respond, through the use of appropriate automated, electronic, mechanical, technological, or other forms of information technology collection methods.

All responses to this notice will become a matter of public record and be summarized in the request for OMB approval.

Signed at Washington, DC, May 26, 2015.

R. Renee Picanso,

Associate Administrator.

[FR Doc. 2015–14047 Filed 6–8–15; 8:45 am]

BILLING CODE 3410–20–P

DEPARTMENT OF AGRICULTURE

Natural Resources Conservation Service

[Docket No. NRCS–2015–0007]

Notice of Availability of Proposed Changes to Section I of the Louisiana Field Office Technical Guide for Public Review and Comment

AGENCY: Natural Resources Conservation Service (NRCS).

ACTION: Notice.

SUMMARY: NRCS is proposing to revise Section I of the Louisiana Field Office Technical Guide to include ''Guidance for Louisiana Food Security Act Wetland Determinations including Offsite Methods'' which will replace the existing ''Louisiana Conventions and Procedures for Performing Wetland Delineations'' (commonly referred as State Wetland Mapping Conventions).

DATES: *Effective Date:* This notice is effective June 9, 2015. Guidance for Louisiana Food Security Act Wetland Determinations including Offsite Methods is in final draft, subject to revision and will be utilized immediately in order to better service requests for wetland determinations for compliance with the Food Security Act of 1985 (as amended) in a timely manner.

Comment Date: Submit comments on or before July 9, 2015.

ADDRESSES: Comments should be submitted, identified by Docket Number NRCS–2015–0007, using any of the following methods:

- *Federal eRulemaking Portal: http://www.regulations.gov.* Follow the instructions for submitting comments.
- *Mail or hand-delivery:* Submit state specific comments to the Louisiana NRCS State Office, located at 3737 Government Street, Alexandria, LA 71302.
- NRCS will post all comments on *http://www.regulations.gov.* In general, personal information provided with comments will be posted. If your comment includes your address, phone number, email, or other personal identifying information, your comments, including personal information, may be available to the public. You may ask in your comment that your personal identifying information be withheld from public view, but this cannot be guaranteed.

FOR FURTHER INFORMATION CONTACT: Kevin D.Norton, State Conservationist. Phone: 318–473–7751

SUPPLEMENTARY INFORMATION: Guidance for Louisiana Food Security Act Wetland Determinations including Offsite Methods will be used as part of the technical documents and procedures to conduct wetland determinations on agricultural land as required by 16 U.S.C. 3822. NRCS is required by 16 U.S.C. 3862 to make available for public review and comment all proposed revisions to standards and procedures used to carry out highly erodible land and wetland provisions of the law.

All comments will be considered. If no comments are received, Guidance for Louisiana Food Security Act Wetland Determinations including Offsite Methods will be considered final.

Electronic copies of the proposed Guidance for Louisiana Food Security Act Wetland Determinations including Offsite Methods are available through *http://www.regulations.gov* by accessing Docket No. NRCS–2015–0007. Alternatively, copies can be downloaded or printed from the Louisiana NRCS Web site located at

http://www.nrcs.usda.gov/wps/portal/nrcs/site/la/home/. Requests for paper versions or inquiries may be directed to the Louisiana State Conservationist at the contact point shown above.

Signed this 5th day of May, 2015, in Alexandria, LA.

Kevin D. Norton,

State Conservationist.

[FR Doc. 2015–14063 Filed 6–8–15; 8:45 am]

BILLING CODE 3410–16–P

DEPARTMENT OF AGRICULTURE

Rural Housing Service

Notice of Intent to Accept Applications To Be an Intermediary Under the Certified Loan Application Packaging Process Within the Section 502 Direct Single Family Housing Program

AGENCY: Rural Housing Service, USDA.

ACTION: Notice.

SUMMARY: The Rural Housing Service (RHS or Agency) published a final rule on April 29, 2015, in the **Federal Register** that amended its regulations for the section 502 direct single family housing loan program to create a certified loan application packaging process. The section 502 direct single family housing loan program is authorized in Title V of the Housing Act of 1949.

Under the certified loan application packaging process, a certified loan application packager and its qualified employer will submit applications to the Agency via an intermediary (unless the applicable Rural Development State Director approves the certified packager to opt not to go through an intermediary). The intermediary will perform quality assurance reviews on the packaged loan applications as well as provide supplemental training, technical assistance, and support to certified packagers and qualified employers to promote quality standards and accountability.

Through this notice, the Agency will accept applications to be an intermediary under the certified loan application packaging process outlined in 7 CFR 3550.75 and other applicable regulations. Approval will be subject to fully meeting the conditions outlined within this notice and regulations, a recommendation by a review panel consisting of Agency staff at the state and national levels, and approval by the RHS Administrator.

Intermediaries operating under the loan application packaging pilot program, which expires on September 30, 2015, are not guaranteed an intermediary role beyond their participation in the pilot program and must apply under this application process should they wish to serve as an intermediary under the regulation.

DATES: Eligible parties interested in serving as an intermediary under the regulatory certified loan application packaging process must submit the requested items to the RHS Single Family Housing Direct Loan Division by July 9, 2015.

ADDRESSES: Submissions may be sent electronically to *SFHDIRECTPROGRAM@wdc.usda.gov* or by mail to Brooke Baumann, Branch Chief, Single Family Housing Direct Loan Division, USDA Rural Development, 1400 Independence Avenue SW., Room 2211, Washington, DC 20250–0783.

FOR FURTHER INFORMATION CONTACT: Brooke Baumann, Branch Chief, Single Family Housing Direct Loan Division, USDA Rural Development, Stop 0783, 1400 Independence Avenue SW., Washington, DC 20250–0783, Telephone: 202–690–4250. Email: *brooke.baumann@wdc.usda.gov.*

SUPPLEMENTARY INFORMATION: To apply to be an Agency-approved intermediary under the certified loan application packaging process, an interested party must furnish sufficient documentation to demonstrate to the Agency's satisfaction that they meet each of the conditions specified below.

(1)(a) Be a Section 501(c)(3) nonprofit organization as evidenced by the organization's Internal Revenue Service (IRS) nonprofit determination letter for 501 (c) (3) status.

(1)(b) Be in good standing in the State(s) of its operation as evidenced by a Certificate of Good Standing or equivalent documentation from the applicable Secretary of State(s) or recent State filings.

(1)(c) Have the capacity to serve multiple qualified employers and their Agency-certified loan application packagers throughout an entire State or entire States and have the capacity to perform quality assurance reviews on a large volume of packaged loan applications within three to five business days of receipt.

(1)(d) Identify what State or States the interested party proposes to serve and provide details on their capacity to serve the identified State(s). Applicants with the capacity to serve multiple States will be given extra scoring points from the review panel.

(2) Be engaged in affordable housing in accordance with their regulations, articles of incorporation, or bylaws.

(3) Be financially viable and demonstrate positive operating performance as evidenced by an independent audit paid for by the applicant seeking to be an intermediary.

(4) Have at least five years of verifiable experience with the Agency's direct single family housing programs (specifically the section 502 direct single family housing loan program, the section 504 single family housing repair programs, and/or the section 523 mutual self-help housing technical assistance program). Verifiable experiences would include, but are not exclusive to, routinely leveraging resources for individual transactions (*e.g.* providing affordable housing products to Agency borrowers), packaging loan applications, serving as an intermediary under the loan application packaging pilot program, and/or being a self-help grantee or technical and management assistance contractor. To the greatest extent possible, the submission should detail collaborations and dollars leveraged.

(5) Demonstrate that its quality assurance staff has experience with packaging, originating, or underwriting affordable housing loans. Provide a resume for each quality assurance staff member. The breadth and depth of their combined skills and qualifications will be considered during the Agency's application review process.

(6) Provide a quality control plan that is customized to the applicant's organization. The quality control plan must show there are controls in place to process application packages that will likely result in an eligibility determination by the Agency. At a minimum, but not limited to, the plan should include: procedures for obtaining and evaluating loan application documents (*e.g.* credit checks and income verification); measures the applicant will take to prevent the submission of incomplete or ineligible application packages to the Agency; the standard operating procedures for employees who will be involved with or affected by the quality control process; and, procedures for ensuring accurate information is submitted to the Agency.

(7) Ensure that their quality assurance staff completes an Agency-approved loan application packaging course and successfully pass any corresponding test within a reasonable amount of time if selected. Until other methods can be considered and vetted, the sole delivery method for the loan application packaging course will be the three-day classroom training co-presented by a designated Agency staff member and sponsored by the NeighborWorks

Training Institute, the Housing Assistance Council, or the Rural Community Assistance Corporation. Given the limited availability of this classroom training, the quality assurance staff will have no more than one year from the date of the intermediary's selection to complete this requirement. Intermediaries selected in this application process must submit documentation of the successful completion of the Agency-approved loan application packaging course within 30 days of course completion.

(8) Provide a letter jointly signed by the organization's Executive Director and Board President affirming the organization will not be the developer, builder, seller of, or have any other such financial interest in the properties for which the application packages are submitted by the organization as an intermediary pursuant to this notice.

(9) Provide a training and support plan that focuses on the measures the applicant will take to provide supplemental training, technical assistance, and support to certified loan application packagers and qualified employers to promote quality standards and accountability. (Note that the Agency may require implementation of Agency-developed and/or approved training and support plan once accepted as an intermediary pursuant to this notice.)

A State Housing Finance Agency interested in being an Agency-approved intermediary must apply under this notice. A State Housing Finance Agency, however, does not need to demonstrate meeting items 1 through 5 above, given the States' HFAs purpose, vision, and structure.

If selected as an intermediary under the certified loan application packaging process, a Memorandum of Understanding (MOU) between the intermediary and the Agency must be signed. The MOU will detail the roles and responsibilities of all parties; will require the intermediary's quality assurance staff to obtain Level 2 eAuthentication identifications and submit loan application packages to the Agency via its eForms Web site (once this process is fully tested); and will require the intermediary to periodically demonstrate that it still meets the requirements under the regulation. This notice should not be construed as containing all those roles and responsibilities.

Decisions by the Agency on intermediary applications are not appealable to the National Appeals Division.

Non-Discrimination Statement

USDA prohibits discrimination in all its programs and activities on the basis of race, color, national origin, age, disability, and where applicable, sex, marital status, familial status, parental status, religion, sexual orientation, political beliefs, genetic information, reprisal, or because all or part of an individual's income is derived from any public assistance program. (Not all prohibited bases apply to all programs. Persons with disabilities who require alternative means for communication of program information (Braille, large print, audiotape, etc.) should contact USDA's TARGET Center at (202) 720–2600 (voice and TDD).

If you wish to file a Civil Rights program complaint of discrimination, complete the USDA Program Discrimination Complaint Form, found online at: *http://www.ascr.usda.gov/complaint_filing_cust.html* or at any USDA Office, or call (866) 632–9992 to request the form. Send your completed complaint form or letter by mail to: U.S. Department of Agriculture, Director, Office of Adjudication, 1400 Independence Avenue SW., Washington, DC 20250; by fax at (202) 690–7442; or, by email at: *program.intake@usda.gov.* Individuals who are deaf, hard of hearing or have speech disabilities and who wish to file a program complaint should please contact USDA through the Federal Relay Service at (800) 877–8339 or (800) 845–6136 (in Spanish). USDA is an equal opportunity provider and employer. The full ''Non-Discrimination Statement'' is found at: *http://www.usda.gov.wps/portal/usda/usdahome?navtype=Non_Discrimination.*

Dated: May 28, 2015.

David Lipsetz,

Acting Administrator, Rural Housing Service.

[FR Doc. 2015–13996 Filed 6–8–15; 8:45 am]

BILLING CODE 3410–XV–P

DEPARTMENT OF COMMERCE

International Trade Administration

[A–520–804]

Certain Steel Nails From the United Arab Emirates: Final Results of Antidumping Duty Administrative Review; 2013–2014

AGENCY: Enforcement and Compliance, International Trade Administration, Department of Commerce

SUMMARY: On February 6, 2015, the Department of Commerce (the Department) published the preliminary results of the administrative review of the antidumping duty order on certain steel nails from the United Arab Emirates (UAE). The period of review (POR) is May 1, 2013, through April 30, 2014. The review covers two producers/exporters of the subject merchandise, Dubai Wire FZE (Dubai Wire) and Precision Fasteners, L.L.C. (Precision). For these final results, we continue to find that subject merchandise has been sold in the United States at less than normal value.

DATES: *Effective Date:* June 9, 2015.

FOR FURTHER INFORMATION CONTACT: Dmitry Vladimirov or Michael Romani, AD/CVD Operations, Office I, Enforcement and Compliance, International Trade Administration, U.S. Department of Commerce, 14th Street and Constitution Avenue NW., Washington, DC 20230; telephone: (202) 482–0665 or (202) 482–0198, respectively.

SUPPLEMENTARY INFORMATION:

Background

On February 6, 2015, the Department published the preliminary results of the administrative review of the antidumping duty order on certain steel nails from the UAE.[1] We invited interested parties to comment on the *Preliminary Results.* We received a case brief from Mid Continent Steel & Wire, Inc. (the petitioner) on March 9, 2015, and a rebuttal brief from Dubai Wire's affiliated importer, Itochu Building Products Inc., and affiliated distributor, PrimeSource Building Products Inc., (together, IBP) on March 16, 2015, both concerning Dubai Wire. We received no case or rebuttal briefs concerning Precision.

The Department conducted this administrative review in accordance with section 751 of the Tariff Act of 1930, as amended (the Act) and 19 CFR 351.213.

Scope of the Order

The merchandise subject to the *Order*[2] is certain steel nails from the UAE. The products are currently classifiable under the Harmonized Tariff Schedule of the United States (HTSUS) subheadings 7317.00.55, 7317.00.65, and 7317.00.75. The HTSUS numbers are provided for convenience and customs purposes. The written

[1] *See Certain Steel Nails From the United Arab Emirates: Preliminary Results of Antidumping Duty Administrative Review; 2013–2014,* 80 FR 6693 (February 6, 2015) (*Preliminary Results*).

[2] *See Certain Steel Nails from the United Arab Emirates: Amended Final Determination of Sales at Less Than Fair Value and Antidumping Duty Order,* 77 FR 27421 (May 10, 2012) (*Order*).

description of the scope of the order is dispositive.[3]

Analysis of the Comments Received

All issues raised in the case and rebuttal briefs by parties to this administrative review are addressed in the Issues and Decision Memorandum. A list of the issues which parties have raised and to which we have responded is in the Issues and Decision Memorandum and attached to this notice as an appendix. The Issues and Decision Memorandum is a public document and is on file electronically *via* Enforcement and Compliance's Antidumping and Countervailing Duty Centralized Electronic Service System (ACCESS). ACCESS is available to registered users at *https://access.trade.gov.* The Issues and Decision Memorandum is also available to all parties in the Central Records Unit (CRU), room 7046 of the main Department of Commerce building. In addition, a complete version of the Issues and Decision Memorandum can be accessed directly on the Internet at *http://enforcement.trade.gov/frn/index.html.* The signed Issues and Decision Memorandum and the electronic version of the Issues and Decision Memorandum are identical in content.

Changes Since the Preliminary Results

We made no changes to the *Preliminary Results.*

Final Results of the Review

As a result of our review, we determine that the following weighted-average dumping margins exist for the period May 1, 2013, through April 30, 2014:

Company	Weighted-average dumping margin (percent)
Dubai Wire FZE	18.13
Precision Fasteners, L.L.C.	184.41

Assessment Rates

The Department shall determine, and U.S. Customs and Border Protection (CBP) shall assess, antidumping duties on all appropriate entries covered by this review. We have continued to rely on facts available to establish Dubai Wire's weighted-average dumping margin and we have continued to rely on facts available with an adverse inference to establish Precision's weighted-average dumping margin in these final results. Therefore, we will instruct CBP to apply *ad valorem* assessment rates of 18.13 percent, and 184.41 percent to all entries of subject merchandise during the POR which were produced and/or exported by Dubai Wire and Precision, respectively.

We intend to issue instructions to CBP 15 days after publication of the final results of this review.

Cash Deposit Requirements

The following deposit requirements will be effective upon publication of the notice of final results of administrative review for all shipments of certain steel nails from the UAE entered, or withdrawn from warehouse, for consumption on or after the date of publication as provided by section 751(a)(2) of the Act: (1) the cash deposit rate for Dubai Wire and Precision will be the rates established in the final results of this administrative review; (2) for previously reviewed or investigated companies not listed above, the cash deposit rate will continue to be the company-specific rate published for the most recently completed segment of this proceeding; (3) if the exporter is not a firm covered in this review, a prior review, or the original investigation but the manufacturer is, the cash deposit rate will be the rate established for the manufacturer of the merchandise for the most recently completed segment of this proceeding; (4) the cash deposit rate for all other manufacturers or exporters will continue to be 4.30 percent.[4] These cash deposit requirements, when imposed, shall remain in effect until further notice.

Notification to Importers

This notice serves as a final reminder to importers of their responsibility under 19 CFR 351.402(f)(2) to file a certificate regarding the reimbursement of antidumping duties prior to liquidation of the relevant entries during this review period. Failure to comply with this requirement could result in the Department's presumption that reimbursement of antidumping duties occurred and the subsequent assessment of doubled antidumping duties.

Administrative Protective Orders

This notice also serves as a reminder to parties subject to administrative protective order (APO) of their responsibility concerning the disposition of proprietary information disclosed under APO in accordance with 19 CFR 351.305(a)(3). Timely written notification of the return or the destruction of APO materials or conversion to judicial protective order is hereby requested. Failure to comply with the regulations and the terms of an APO is a sanctionable violation.

We are issuing and publishing these final results of administrative review in accordance with sections 751(a)(1) and 777(i)(1) of the Act.

Dated: June 2, 2015.

Ronald K. Lorentzen,

Acting Assistant Secretary for Enforcement and Compliance.

Appendix

I. Summary
II. Background
III. Scope of the Order
IV. Discussion of the Issue
Comment 1: Application of Facts Available to Dubai Wire
V. Recommendation

[FR Doc. 2015–14078 Filed 6–8–15; 8:45 am]

BILLING CODE 3510–DS–P

[3] For a full description of the scope of the order, *see* the memorandum from Deputy Assistant Secretary Christian Marsh to Acting Assistant Secretary Ronald K. Lorentzen entitled ''Certain Steel Nails from the United Arab Emirates: Issues and Decision Memorandum for Final Results of Antidumping Duty Administrative Review; 2013–2014'' dated concurrently with and hereby adopted by this notice (Issues and Decision Memorandum).

[4] The all-others rate established in the *Order.*

DEPARTMENT OF COMMERCE

International Trade Administration

[C–570–968]

Aluminum Extrusions From the People's Republic of China: Preliminary Results, Preliminary Intent To Rescind, in Part, and Partial Rescission of Countervailing Duty Administrative Review; 2013

AGENCY: Enforcement and Compliance, International Trade Administration, Department of Commerce.

SUMMARY: In response to multiple requests from interested parties, the Department of Commerce (the Department) is conducting an administrative review of the countervailing duty order[1] on aluminum extrusions from the People's Republic of China (PRC). The period of review (POR) is January 1, 2013 through December 31, 2013. We preliminarily determine that the Guang Ya Group[2]

[1] *See Aluminum Extrusions from the People's Republic of China: Countervailing Duty Order,* 76 FR 30653 (May 26, 2011) (*Order*).

[2] For purposes of this administrative review, the Guang Ya Group includes Guang Ya Aluminium Industries Co. Ltd.; Foshan Guangcheng Aluminium Co., Ltd.; and Yonghi Guanghai Aluminium Industry Co., Ltd. Also, these companies submitted responses on the record of this review clarifying the usage of ''Aluminium'' in its name, rather than ''Aluminum,'' the form on which we both received a request for review and/or on which we initiated this review.

and the Jangho Companies [3] (mandatory respondents) received countervailable subsidies during the POR. Interested parties are invited to comment on these preliminary results of review.

DATES: *Effective Date:* June 9, 2015.

FOR FURTHER INFORMATION CONTACT: Davina Friedmann, Tyler Weinhold or Robert James, AD/CVD Operations, Office VI, Enforcement and Compliance, International Trade Administration, U.S. Department of Commerce, 14th Street and Constitution Avenue NW., Washington, DC 20230; telephone: (202) 482–0698, (202) 482–1121 or (202) 482–0649, respectively.

SUPPLEMENTARY INFORMATION:

Scope of the Order

The merchandise covered by the *Order* is aluminum extrusions which are shapes and forms, produced by an extrusion process, made from aluminum alloys having metallic elements corresponding to the alloy series designations published by The Aluminum Association commencing with the numbers 1, 3, and 6 (or proprietary equivalents or other certifying body equivalents).[4]

Imports of the subject merchandise are provided for under the following categories of the Harmonized Tariff Schedule of the United States (HTSUS): 7610.10.00, 7610.90.00, 7615.10.30, 7615.10.71, 7615.10.91, 7615.19.10, 7615.19.30, 7615.19.50, 7615.19.70, 7615.19.90, 7615.20.00, 7616.99.10, 7616.99.50, 8479.89.98, 8479.90.94, 8513.90.20, 9403.10.00, 9403.20.00, 7604.21.00.00, 7604.29.10.00, 7604.29.30.10, 7604.29.30.50, 7604.29.50.30, 7604.29.50.60, 7608.20.00.30, 7608.20.00.90, 8302.10.30.00, 8302.10.60.30, 8302.10.60.60, 8302.10.60.90, 8302.20.00.00, 8302.30.30.10, 8302.30.30.60, 8302.41.30.00, 8302.41.60.15, 8302.41.60.45, 8302.41.60.50, 8302.41.60.80, 8302.42.30.10, 8302.42.30.15, 8302.42.30.65, 8302.49.60.35, 8302.49.60.45, 8302.49.60.55, 8302.49.60.85, 8302.50.00.00, 8302.60.90.00, 8305.10.00.50, 8306.30.00.00, 8418.99.80.05, 8418.99.80.50, 8418.99.80.60, 8419.90.10.00, 8422.90.06.40, 8479.90.85.00, 8486.90.00.00, 8487.90.00.80, 8503.00.95.20, 8515.90.20.00, 8516.90.50.00, 8516.90.80.50, 8708.80.65.90, 9401.90.50.81, 9403.90.10.40, 9403.90.10.50, 9403.90.10.85, 9403.90.25.40, 9403.90.25.80, 9403.90.40.05, 9403.90.40.10, 9403.90.40.60, 9403.90.50.05, 9403.90.50.10, 9403.90.50.80, 9403.90.60.05, 9403.90.60.10, 9403.90.60.80, 9403.90.70.05, 9403.90.70.10, 9403.90.70.80, 9403.90.80.10, 9403.90.80.15, 9403.90.80.20, 9403.90.80.30, 9403.90.80.41, 9403.90.80.51, 9403.90.80.61, 9506.51.40.00, 9506.51.60.00, 9506.59.40.40, 9506.70.20.90, 9506.91.00.10, 9506.91.00.20, 9506.91.00.30, 9506.99.05.10, 9506.99.05.20, 9506.99.05.30, 9506.99.15.00, 9506.99.20.00, 9506.99.25.80, 9506.99.28.00, 9506.99.55.00, 9506.99.60.80, 9507.30.20.00, 9507.30.40.00, 9507.30.60.00, 9507.90.60.00, and 9603.90.80.50

The subject merchandise entered as parts of other aluminum products may be classifiable under the following additional Chapter 76 subheadings: 7610.10, 7610.90, 7615.19, 7615.20, and 7616.99 as well as under other HTSUS chapters. In addition, fin evaporator coils may be classifiable under HTSUS numbers: 8418.99.80.50 and 8418.99.80.60. While HTSUS subheadings are provided for convenience and customs purposes, the written description of the scope of this *Order* is dispositive.

The Department is conducting two scope inquiries concerning aluminum extrusions made from 5 series aluminum alloy. Petitioner (Aluminum Extrusions Fair Trade Committee) advocates that the Department impose a certification requirement related to these products, which the Department is considering in the context of these scope proceedings. Parties that wish to file comments on this potential certification requirement must do so on the record of these scope proceedings.[5] The final scope rulings, including our decision with respect to the certification issue, are currently due July 7, 2015.

The Department is conducting two scope inquiries concerning aluminum extrusions made from 5 series aluminum alloy. Petitioner (Aluminum Extrusions Fair Trade Committee) advocates that the Department impose a certification requirement related to these products, which the Department is considering in the context of these scope proceedings. Parties that wish to file comments on this potential certification requirement must do so on the record of these scope proceedings.[6] The final scope rulings, including our decision with respect to the certification issue, are currently due July 7, 2015.

Methodology

The Department conducted this review in accordance with section 751(a)(1)(A) of the Tariff Act of 1930, as amended (the Act). For each of the subsidy programs found countervailable, we preliminarily find that there is a subsidy, *i.e.,* a government-provided financial contribution that gives rise to a benefit to the recipient, and that the subsidy is specific.[7] For a full description of the methodology underlying all of the Department's conclusions, including our reliance, in part, on adverse facts available pursuant to sections 776(a) and (b) of the Act, *see* the Preliminary Decision Memorandum.

A list of topics discussed in the Preliminary Decision Memorandum is provided as an Appendix to the notice. The Preliminary Decision Memorandum is a public document and is on file electronically *via* Enforcement and Compliance's Antidumping and Countervailing Duty Centralized Electronic Service System (ACCESS). ACCESS is available to registered users at *http://access.trade.gov* and in the Central Records Unit, room 7046 of the main Department of Commerce building. In addition, a complete version of the Preliminary Decision Memorandum can be accessed directly on the Internet at *http://www/trade.gov/*

[3] For purposes of this administrative review, the Jangho companies includes Guangzhou Jangho Curtain Wall System Engineering Co., Ltd., (Guangzhou Jangho); Jangho Group Co., Ltd. (Jangho Group Co.); Beijing Jiangheyuan Holding Co., Ltd (Beijing Jiangheyuan); Beijing Jangho Curtain Wall System Engineering Co., Ltd. (Beijing Jangho); and Shanghai Jangho Curtain Wall System Engineering Co., Ltd., (Shanghai Jangho).

[4] *See* Memorandum from Christian Marsh, Deputy Assistant Secretary for Antidumping and Countervailing Duty Operations to Ronald K. Lorentzen, Acting Assistant Secretary for Enforcement and Compliance, ''Decision Memorandum for Preliminary Results of Countervailing Duty Administrative Review: Aluminum Extrusions from the People's Republic of China,'' dated concurrently with this notice (Preliminary Decision Memorandum) for a complete description of the scope of the *Order.*

[5] *See* Letter from Trending Imports LLC to the Department, ''Aluminum Extrusions from the People's Republic of China: Trending Imports LLC Request for Scope Ruling Concerning 5050 Alloy Extrusions,'' dated December 12, 2013, and Letter from Kota International, LTD to the Department, ''Antidumping Duty and Countervailing Duty Orders on Aluminum Extrusions from the People's Republic of China: Scope Ruling Request,'' dated October 21, 2013.

[6] *See* letter from Trending entitled, ''Aluminum Extrusions from the People's Republic of China: Trending Imports LLC Request for Scope Ruling Concerning 5050 Alloy Extrusions,'' dated December 12, 2013, and letter from Kota entitled, ''Antidumping Duty and Countervailing Duty Orders on Aluminum Extrusions from the People's Republic of China: Scope Ruling Request,'' dated October 21, 2013.

[7] *See* Sections 771(5)(B) and (D) of the Act regarding financial contribution; section 771(5)(E) of the Act regarding benefit; and section 771(5A) of the Act regarding specificity.

frn/index.html. The signed Preliminary Decision Memorandum is identical in content.

We were not able to make a preliminary determination concerning the countervailability of certain programs because we require additional information and/or need more time to consider information that was received close to the date of these preliminary results.[8] We intend to address these programs in a post-preliminary analysis memorandum.

Partial Rescission of Review

For those companies named in the *Initiation Notice*[9] for which all review requests have been timely withdrawn, we are rescinding this administrative review in accordance with 19 CFR 351.213(d)(1). These companies are listed at Appendix II to this notice. For these companies, countervailing duties shall be assessed at rates equal to the rates of the cash deposits for estimated countervailing duties required at the time of entry, or withdrawal from warehouse, for consumption, during the period January 1, 2013 through December 31, 2013, in accordance with 19 CFR 351.212(c)(2).

Intent To Rescind Administrative Review, In Part

Between August 1, 2014 and September 5, 2014, the Department received timely no-shipment certifications from certain companies.[10] Because there is no evidence on the record to indicate that these companies had entries of subject merchandise during the POR, pursuant to 19 CFR 351.213(d)(3), we intend to rescind the review with respect to these companies. A final decision regarding whether to rescind the review of these companies will be made in the final results of this review.

Preliminary Rate for Non-Selected Companies Under Review

There are 37 companies for which a review was requested and not rescinded, but were not selected as mandatory respondents. For these companies, we preliminarily did not calculate the non-selected rate using a methodology of weight-averaging rates of the Guang Ya Group and Jangho Group because doing so risks disclosure of proprietary information. Instead, we calculated an average rate using the mandatory respondents' publicly-ranged sales data for 2013. For further information on the calculation of the non-selected rate, refer to the section in the Preliminary Decision Memorandum entitled, ''Preliminary *Ad Valorem* Rate for Non-Selected Companies Under Review.''

For those companies that failed to respond to the Department's quantity and value questionnaire, we have relied on facts available, determined that those companies are non-cooperative and, on that basis, we found that application of adverse facts available is warranted in determining the subsidy rate for those companies. For further discussion of this determination, refer to the section in the Preliminary Decision Memorandum entitled, ''Use of Facts Otherwise Available and Adverse Inferences.''

Preliminary Results of Administrative Review

As a result of this administrative review, we preliminarily determine the following net subsidy rates for 2013:

Company	2013 Ad valorem rate (percent)
Guang Ya Group[11]	4.83
Jangho Companies[12]	1.61
Dynamic Technologies China Ltd	158.96
Foreign Trade Co. of Suzhou New & High Tech Industrial Development Zone	158.96
Foshan Shunde Aoneng Electrical Appliances Co., Ltd	158.96
Golden Dragon Precise Copper Tube Group	158.96
WTI Building Products, Ltd	158.96
Zhaoqing Asia Aluminum Factory Company Ltd	158.96
Allied Maker Limited	1.81
Alnan Aluminum Co. Ltd	1.81
Barcalente Metal Producers (Suzhou) Co. Ltd	1.81
Changzhou Changzheng Evaporator Co., Ltd	1.81
Classic & Contemporary Inc.	1.81
Danfoss Micro Channel Heat Exchanger (Jia Xing) Co. Ltd	1.81
Dongguan Golden Tiger Hardware Industrial Co., Ltd	1.81
Ever Extend Ent. Ltd	1.81
Fenghua Metal Product Factory	1.81
Guandong JMA Aluminum Profile (Group) Co., Ltd[13]	1.81
Guangdong Whirlpool Electrical Appliances Co. Ltd	1.81
Guangdong Zhongya Aluminum Company Limited	1.81
Hanyung Alcobis Co., Ltd	1.81
Hangyung Metal (Suzhou) Co., Ltd	1.81
Henan New Kelong Electrical Appliances, Co., Ltd	1.81
IDEX Dinglee Technology (Tianjin) Co., Ltd	1.81
IDEX Technology Suzhou Co., Ltd	1.81
Jiangsu Susun Group (HK) Co., Ltd	1.81
Justhere Co., Ltd	1.81
Kromet International Inc.	1.81
Metaltek Group Co. Ltd	1.81
North Fenghua Aluminum Limited	1.81
Nidec Sankyo Singapore Pte. Ltd	1.81
Nanhai Textiles Import & Export Co., Ltd	1.81
Permasteelisa Hong Kong Ltd	1.81

[8] *See* the Preliminary Decision Memorandum at section ''*Programs For Which We Do Not Yet Have Sufficient Information.*''

[9] *See Initiation of Antidumping and Countervailing Duty Administrative Reviews,* 79 FR 36462 (June 27, 2014) (*Initiation Notice*).

[10] *See* the accompanying Preliminary Decision Memorandum for a list of such companies under the section entitled, ''Intent to Partially Rescind Review and Partial Rescission of Review.''

Company	2013 Ad valorem rate (percent)
Permasteelisa South China Factory	1.81
Sapa Profiles (Shanghai) Co., Ltd	1.81
Shanghai Tongtai Precise Aluminum Alloy Manufacturing Co., Ltd	1.81
Shenyang Yuanda Aluminum Industry Engineering Co., Ltd	1.81
Taishan City Kam Kiu Aluminum Extrusion Co., Ltd	1.81
Taizhou United Imp & Exp Co Ltd	1.81
Union Industry (Asia) Co., Limited	1.81
Whirlpool Microwave Products Development Ltd	1.81
Zhejiang Dongfeng Refrigeration Components Co. Ltd	1.81
Zhongya Shaped Aluminum (HK) Holding Limited	1.81
Zhongshan Daya Hardware Co., Ltd	1.81
Zhaoqing New Zhongya Aluminum Co., Ltd	1.81

Disclosure and Public Comment

The Department intends to disclose to interested parties the calculations performed in connection with these preliminary results within five days of the date of publication of this notice.[14] As a result of the Department's intention to release a post-preliminary analysis memorandum, interested parties may submit case briefs on both the preliminary results and on the post-preliminary analysis memorandum no later than seven days after the disclosure of the calculations performed in connection with the post-preliminary analysis memorandum.[15] Rebuttal briefs, limited to issues raised in the case briefs, may be filed no later than five days after the date for filing case briefs.[16] Parties who submit case briefs or rebuttal briefs in this proceeding are encouraged to submit with each argument: (1) A statement of the issue; (2) a brief summary of the argument; and (3) a table of authorities.[17] Case and rebuttal briefs should be filed electronically using ACCESS.[18]

Pursuant to 19 CFR 351.310(c), interested parties who wish to request a hearing, or to participate if one is requested, must submit a written request to the Assistant Secretary for Enforcement and Compliance, filed electronically *via* ACCESS. An electronically filed document must be received successfully in its entirety by the Department's electronic records system, ACCESS, by 5:00 p.m. Eastern Standard Time within 30 days after the date of publication of this notice.[19] Requests should contain: (1) The party's name, address, and telephone number; (2) the number of participants; and (3) a list of issues to be discussed. Issues raised in the hearing will be limited to those raised in the respective case briefs. If a request for a hearing is made, parties will be notified of the date and time of the hearing to be held at the U.S. Department of Commerce, 14th Street and Constitution Avenue NW., Washington, DC 20230.

Unless the deadline is extended pursuant to section 751(a)(3)(A) of the Act, the Department intends to issue the final results of this administrative review, including the results of its analysis of the issues raised in all written case briefs, within 120 days after the date of publication of this notice, pursuant to section 751(a)(3)(A) of the Act and 19 CFR 351.213(h)(1).

Assessment Rates

Upon completion of the administrative review, the Department shall determine, and U.S. Customs and Border Protection (CBP) shall assess, countervailing duties on all appropriate entries covered by this review. We intend to issue assessment instructions to CBP 15 days after publication of the final results of this review.

Cash Deposit Requirements

The Department also intends to instruct CBP to collect cash deposits of estimated countervailing duties in the amounts indicated above for each company listed on shipments of subject merchandise entered, or withdrawn from warehouse, for consumption on or after the date of publication of the final results of this administrative review. For all non-reviewed firms, we will instruct CBP to collect cash deposits of estimated countervailing duties at the most recent company-specific or all-others rate applicable to the company, as appropriate. These cash deposit requirements, when imposed, shall remain in effect until further notice.

Notification to Interested Parties

We are issuing and publishing these preliminary results in accordance with sections 751(a)(1) and 777(i)(1) of the Act and 19 CFR 351.213.

Dated: June 1, 2015.

Ronald K. Lorentzen,

Acting Assistant Secretary for Enforcement and Compliance.

Appendix I—List of Topics Discussed in the Preliminary Decision Memorandum

Summary
Background
Scope of the Order
Subsidies Valuation Information
Loan Benchmark Rates
Use of Facts Otherwise Available and Adverse Inferences
Analysis of Programs
Programs for Which Additional Information Is Needed
Programs Preliminarily Determined Not To Confer Measurable Benefit or Not Used
Preliminary *Ad Valorem* Rate for Non-Selected Companies Under Review
Preliminary *Ad Valorem* Rate for Non-Cooperated Companies Under Review

Appendix II—List of Companies on Which We Are Rescinding This Administrative Review [20]

1. Acro Import and Export Co.

[11] *See* Footnote 2.

[12] *See* Footnote 3.

[13] Petitioner requested a review of Guangdong JMA Aluminum Profile Factory (Group) Co., Ltd. *See* Letter from the Aluminum Extrusions Fair Trade Committee regarding, ''Aluminum Extrusions from the People's Republic of China: Request for Administrative Review,'' dated June 2, 2014 (Petitioner's Request for Review). *See also,* Letter from Guangdong JMA Aluminium Profile Factory (Group) Co., Ltd regarding ''Aluminum Extrusions from China; Administrative Review Request,'' dated May 23, 2014. However, in the Department's *Initiation Notice,* this company's name was spelled *Guandone* JMA Aluminum Profile Factory (Group) Co., Ltd. Accordingly, this notice serves as a correction to the spelling of this company's name.

[14] *See* 19 CFR 351.224(b).

[15] *See* 19 CFR 351.309(c)(2).

[16] *See* 19 CFR 351.309(d).

[17] *See* 19 CFR 351.309(c)(2) and (d)(2).

[18] *See* 19 CFR 351.303.

[19] *See* 19 CFR 351.310(c).

[20] One company on which the review was initiated, tenKsolar Inc., provided a certified submission of its role as a U.S. importer located within the United States. *See* Letter from tenKSolar (Shanghai) Co., Ltd. regarding, ''Aluminum Extrusions from the People's Republic of China—Quantity and Value Questionnaire Response,'' dated September 4, 2014. Because tenKsolar is a

Continued

2. Activa International Inc.
3. Aluminicaste Fundicion de Mexico
4. Changshu Changshen Aluminum Products Co., Ltd.
5. Changzhou Tenglong Auto Parts Co., Ltd.
6. China Zhongwang Holdings, Ltd.
7. Chiping One Stop Industrial & Trade Co., Ltd.
8. Clear Sky Inc.
9. Cosco (J.M.) Aluminum Co., Ltd.
10. Dongguan Aoda Aluminum Co., Ltd.[21]
11. Dragonluxe Limited
12. Dynabright International Group (HK) Limited
13. First Union Property Limited
14. Foshan City Nanhai Hongjia Aluminum alloy Co., Ltd.
15. Foshan Jinlan Aluminum Co. Ltd.
16. Foshan JMA Aluminum Company Limited
17. Foshan Shanshui Fenglu Aluminum Co., Ltd.
18. Foshan Yong Li Jian Alu. Ltd.
19. Fujian Sanchuan Aluminum Co., Ltd.
20. Global PMX Dongguan Co., Ltd.
21. Global Point Technology (Far East) Limited
22. Gold Mountain International Development, Ltd.
23. Gran Cabrio Capital Pte. Ltd.
24. Gree Electric Appliances
25. GT88 Capital Pte. Ltd.
26. Guangdong Hao Mei Aluminum Co., Ltd.
27. Guangdong Jianmei Aluminum Profile Company Limited
28. Guangdong Nanhai Foodstuffs Imp. & Exp. Co., Ltd.
29. Guangdong Weiye Aluminum Factory Co., Ltd.
30. Guangdong Xingfa Aluminum Co., Ltd.
31. Guangdong Xin Wei Aluminum Products Co., Ltd.
32. Guangdong Yonglijian Aluminum Co., Ltd
33. Hangzhou Xingyi Metal Products Co., Ltd.
34. Hanwood Enterprises Limited
35. Hao Mei Aluminum Co., Ltd.
36. Hao Mei Aluminum International Co., Ltd.
37. Hong Kong Gree Electric Appliances Sales Limited
38. Honsense Development Company
39. Hui Mei Gao Aluminum Foshan Co., Ltd.
40. Idex Health
41. Innovative Aluminum (Hong Kong) Limited
44. iSource Asia
45. Jiangmen Qunxing Hardware Diecasting Co., Ltd.
46. Jiangsu Changfa Refrigeration Co., Ltd.
47. Jiangyin Trust International Inc
48. Jiangyin Xinhong Doors and Windows Co., Ltd.
49. Jiaxing Jackson Travel Products Co., Ltd.
50. Jiaxing Taixin Metal Products Co., Ltd.
51. Jiuyan Co., Ltd.
52. JMA (HK) Company Limited
53. Kam Kiu Aluminum Products Sdn Bhd
54. Kanal Precision Aluminum Product Co., Ltd.
55. Karlton Aluminum Company Ltd.
56. Kunshan Giant Light Metal Technology Co., Ltd.
57. Liaoning Zhongwang Group Co., Ltd.
58. Liaoyang Zhongwang Aluminum Profiled Co. Ltd.
59. Longkou Donghai Trade Co., Ltd.
60. Massoud & Bros. Co., Ltd.
61. Metaltek Metal Industry Co., Ltd.
62. Midea Air Conditioning Equipment Co., Ltd.
63. Midea International Trading Co., Ltd./ Midea International Trading Co., Ltd.
64. Miland Luck Limited
65. New Asia Aluminum & Stainless Steel Product Co., Ltd.
66. Nidec Sankyo (Zhejiang) Corporation
67. Ningbo Coaster International Co., Ltd.
68. Ningbo Hi Tech Reliable Manufacturing Company
69. Ningbo Lakeside Machiery Factory[22]
70. Ningbo Minmetals & Machinery Imp. & Exp. Corp.
71. Ningbo Yili Import and Export Co., Ltd.
72. North China Aluminum Co., Ltd.
73. Northern States Metals
74. PanAsia Aluminum (China) Limited
75. Pengcheng Aluminum Enterprise Inc.
76. Pingguo Aluminum Company Limited
77. Pingguo Asia Aluminum Co., Ltd.
78. Popular Plastics Company Limited
79. Press Metal International Ltd
80. Samuel, Son & Co., Ltd.
81. Sanchuan Aluminum Co., Ltd.
82. Shangdong Huasheng Pesticide Machinery Co.
83. Shangdong Nanshan Aluminum Co., Ltd.
84. Shanghai Automobile Air Conditioner Accessories Ltd.
85. Shanghai Canghai Aluminum Tube Packaging Co., Ltd
86. Shanghai Dongsheng Metal
87. Shanghai Shen Hang Imp & Exp Co., Ltd.
88. Shenzhen Hudson Technology Development Co., Ltd.
89. Shenzhen Jiuyuan Co., Ltd.
90. Sihui Shi Guo Yao Aluminum Co., Ltd.
91. Sincere Profit Limited
92. Skyline Exhibit Systems (Shanghai) Co., Ltd.
93. Suzhou JRP Import & Export Co., Ltd.
94. Suzhou New Hongji Precesion Part Co
95. Tai-Ao Aluminum (Taishan) Co. Ltd.
96. Taizhou Lifeng Manufacturing Corporation
97. tenKsolar (Shanghai) Co., Ltd.
98. tenKsolar, Inc.
98. Taogoasei America Inc./Toagoasei America Inc.
99. Tianjin Ganglv Nonferrous Metal Materials Co., Ltd.
100. Tianjin Jinmao Import & Export Corp., Ltd.
101. Tianjin Ruxin Electric Heat Transmission Technology Co., Ltd.
102. Tianjin Xiandai Plastic & Aluminum Products Co., Ltd.
103. Tiazhou Lifeng Manufacturing Corporation/Taizhou Lifeng Manufacturing Corporation, Ltd.
104. Top-Wok Metal Co., Ltd.
105. Traffic Brick Network, LLC
106. USA Worldwide Door Components (Pinghu) Co., Ltd.
107. Wenzhou Shengbo Decoration & Hardware
108. Whirlpool (Guangdong)
109. Xin Wei Aluminum Company Limited
110. Xinya Aluminum & Stainless Steel Product Co., Ltd.
111. Zhejiang Anji Xinxiang Aluminum Co., Ltd.
112. Zhejiang Yongkang Listar Aluminum Industry Co., Ltd.
113. Zhejiang Zhengte Group Co., Ltd.
114. Zhenjiang Xinlong Group Co., Ltd.
115. Zhongshan Gold Mountain Aluminum Factory Ltd.
116. Zhuhai Runxingtai Electrical Equipment Co., Ltd.

U.S. importer, we are rescinding the review of this entity.

[21] Petitioner requested a review of Dongguang Aoda Aluminum Co., Ltd. *See* Letter from the Aluminum Extrusions Fair Trade Committee regarding, ''Aluminum Extrusions from the People's Republic of China: Request for Administrative Review,'' dated June 2, 2014. However, in the Department's initiation notice, this company's name was spelled *Dongguan* Aoda Aluminum Co., Ltd. Accordingly, this notice serves as a correction to the spelling of this company's name.

[22] Homax Group Inc. (Homax) requested a review of Ningbo Lakeside Machinery Factory. *See* Letter from the Homax regarding, ''Aluminum Extrusions from the People's Republic of China: Request for Third Administrative Review of Countervailing Duty Order,'' dated May 30, 2014. However, in the Department's initiation notice, this company's name was spelled Ningbo Lakeside *Machiery* Factory. Accordingly, this notice serves as a correction to the spelling of this company's name.

[FR Doc. 2015–14076 Filed 6–8–15; 8:45 am]

BILLING CODE 3510–DS–P

DEPARTMENT OF COMMERCE

International Trade Administration

[C–570–913]

Certain New Pneumatic Off-The-Road Tires From the People's Republic of China: Rescission of the Countervailing Duty Administrative Review; 2013

AGENCY: Enforcement and Compliance, International Trade Administration, Department of Commerce.

SUMMARY: The Department of Commerce (the Department) is rescinding the administrative review of the countervailing duty (CVD) order on certain new pneumatic off-the-road (OTR) tires from the People's Republic of China (PRC) covering the period of review (POR) January 1, 2013, through December 31, 2013.

DATES: *Effective Date:* June 9, 2015.

FOR FURTHER INFORMATION CONTACT: Nicholas Czajkowski, AD/CVD Operations, Office VII, Enforcement and Compliance, International Trade Administration, U.S. Department of Commerce, 14th Street and Constitution Avenue NW., Washington, DC 20120; telephone (202) 482–1395.

SUPPLEMENTARY INFORMATION:

Background

On September 2, 2014, the Department published a notice of

opportunity to request an administrative review of the CVD order of OTR Tires from the PRC.[1] On September 30, 2014, Guizhou Tyre Co., Ltd. (GTC) and its affiliate, Guizhou Tyre Import and Export Co., Ltd. (GTCIE), requested a review covering their exports of subject merchandise during the POR.[2] Pursuant to this request, on October 30, 2014, the Department initiated a review for GTC and GTCIE.[3] On December 17, 2014, GTC and GTCIE timely withdrew their review request.[4]

Rescission of Review

Pursuant to 19 CFR 351.213(d)(1), the Secretary will rescind an administrative review, in whole or in part, if a party who requested the review withdraws its request within 90 days of the day of publication of the notice of initiation of the requested review. The aforementioned request for review was timely withdrawn and because no other party requested a review of GTC and GTCIE, or any other producer/exporter of subject merchandise, in accordance with 19 CFR 351.213(d)(1), we are rescinding this review in its entirety.

Assessment Rates

The Department will instruct U.S. Customs and Border Protection (CBP) to assess CVD duties on all entries of OTR Tires from the PRC made during the POR at rates equal to the cash deposit of estimated CVD duties required at the time of entry, or withdrawal from the warehouse, for consumption, in accordance with 19 CFR 351.212(c)(1)(i). The Department intends to issue appropriate assessment instructions to CBP 15 days after the date of publication of this notice in the **Federal Register**.

Notifications

This notice serves as a final reminder to importers of their responsibility under 19 CFR 351.402(f)(2) to file a certificate regarding the reimbursement of CVD duties prior to liquidation of the relevant entries during this POR. Failure to comply with this requirement could result in the Secretary's presumption that reimbursement of the CVD duties occurred and the subsequent assessment of double CVD duties.

This notice also serves as a reminder to parties subject to an administrative protective order (APO) of their responsibility concerning the return or destruction of proprietary information disclosed under APO in accordance with 19 CFR 351.305, which continues to govern business proprietary information in this segment of the proceeding. Timely written notification of the return/destruction of APO materials or conversion to judicial protective order is hereby requested. Failure to comply with the regulations and terms of an APO is a violation which is subject to sanction.

This notice is issued and published in accordance with section 777(i)(1) of the Tariff Act of 1930, as amended, and 19 CFR 351.213(d)(4).

Dated: May 29, 2015.

Christian Marsh,

Deputy Assistant Secretary for Antidumping and Countervailing Duty Operations.

[FR Doc. 2015–13830 Filed 6–8–15; 8:45 am]

BILLING CODE 3510–DS–P

[1] *See Antidumping or Countervailing Duty Order, Finding, or Suspended Investigation; Opportunity To Request Administrative Review,* 79 FR 51958 (September 2, 2014).

[2] *See* Letter to the Department, ''Request for Administrative Review: Countervailing Duty Order on Certain New Pneumatic Off-The-Road Tires from the People's Republic of China (Case No: C–570–913) (POR: January 1, 2013–December 31, 2013),'' dated September 30, 2014.

[3] *See Initiation of Antidumping and Countervailing Duty Administrative Reviews,* 79 FR 64565 (October 30, 2014).

[4] *See* Letter to the Department, ''GTC Withdrawal of Request for Administrative Review: Sixth Administrative Review of Countervailing Duty Order on Certain New Pneumatic Off-The-Road Tires from the People's Republic of China (Case No: C–570–913) (POR: January 1, 2013–December 31, 2013),'' dated December 17, 2014.

DEPARTMENT OF COMMERCE

International Trade Administration

[A–570–878]

Saccharin From the People's Republic of China: Revocation of the Antidumping Duty Order

AGENCY: Enforcement and Compliance, International Trade Administration, Department of Commerce.

SUMMARY: As a result of the determination by the International Trade Commission (ITC) that revocation of the antidumping duty (AD) order on saccharin from the People's Republic of China (PRC) is not likely to lead to continuation or recurrence of material injury to an industry in the United States within a reasonably foreseeable time, the Department of Commerce (the Department) is revoking the AD order on saccharin from the PRC.

DATES: *Effective Date:* June 8, 2014.

FOR FURTHER INFORMATION CONTACT: Laurel LaCivita, AD/CVD Operations, Office III, Enforcement and Compliance, International Trade Administration, U.S. Department of Commerce, 14th Street and Constitution Avenue NW., Washington, DC 20230; telephone: (202) 482–4243.

SUPPLEMENTARY INFORMATION:

Background

On July 9, 2003, the Department published the AD order on saccharin from the PRC[1] and, on June 8, 2009, at the conclusion of the first sunset review, the Department published a notice of continuation of the AD order on saccharin from the PRC.[2] On May 1, 2014, the Department initiated a second sunset review of the AD order on saccharin from the PRC, pursuant to section 751(c) of the Tariff Act of 1930, as amended (the Act). As a result of its review, the Department determined that revocation of the AD order on saccharin from the PRC would likely lead to a continuation or recurrence of dumping and notified the ITC of the magnitude of the margins of dumping likely to prevail were the order revoked.[3]

On May 28, 2015, the ITC published its determination, pursuant to sections 751(c) and 752(a) of the Act, that revocation of the AD order on saccharin from the PRC would not be likely to lead to the continuation or recurrence of material injury within a reasonably foreseeable time.[4]

Scope of the Order

The product covered by this AD order is saccharin. Saccharin is defined as a non-nutritive sweetener used in beverages and foods, personal care products such as toothpaste, table top sweeteners, and animal feeds. It is also used in metalworking fluids. There are four primary chemical compositions of saccharin: (1) Sodium saccharin (American Chemical Society Chemical Abstract Service (''CAS'') Registry 128–44–9); (2) calcium saccharin (CAS Registry 6485–34–3); (3) acid (or insoluble) saccharin (CAS Registry 81–07–2); and (4) research grade saccharin. Most of the U.S.-produced and imported grades of saccharin from the PRC are sodium and calcium saccharin, which are available in granular, powder, spray-dried powder, and liquid forms. The merchandise subject to this order is currently classifiable under subheading 2925.11.00 of the Harmonized Tariff Schedule of the United States (''HTSUS'') and includes all types of

[1] *See Notice of Antidumping Duty Order: Saccharin from the People's Republic of China,* 68 FR 40906 (July 9, 2003).

[2] *See Continuation of Antidumping Duty Order on Saccharin from the People's Republic of China,* 74 FR 27089 (June 8, 2009) (''*Continuation*'').

[3] *See Saccharin from the People's Republic of China: Final Results of Expedited Second Sunset Review of Antidumping Duty Order,* 79 FR 51139 (August 27, 2014).

[4] *See Investigation No. 731–TA–1013 (Second Review), Saccharin from China,* 80 FR 30487 (May 28, 2015); *see also, Saccharin from China* (*Inv. No. 731–TA–1013 (Second Review),* USITC Publication 4534, May 2015).

saccharin imported under this HTSUS subheading, including research and specialized grades. Although the HTSUS subheading is provided for convenience and customs purposes, the Department's written description of the scope of this order remains dispositive.

Revocation

As a result of the determination by the ITC that revocation of the AD order on saccharin from the PRC would not be likely to lead to continuation or recurrence of material injury to an industry in the United States, pursuant to section 751(d)(2) of the Act, the Department is revoking the AD order on saccharin from the PRC. Pursuant to section 751(d)(2) of the Act and 19 CFR 351.222(i)(2)(i), the effective date of revocation is June 8, 2014 (*i.e.,* the fifth anniversary of the effective date of publication in the **Federal Register** of the previous continuation of this order).[5]

Cash Deposits and Assessment of Duties

The Department will notify CBP, 15 days after publication of this notice, to terminate the suspension of liquidation and to discontinue the collection of cash deposits on entries of the subject merchandise from the PRC, entered or withdrawn from warehouse, on or after June 8, 2014. The Department will further instruct CBP to refund with interest all cash deposits on entries made on or after June 8, 2014.

Administrative Protective Order

This notice also serves as the only reminder to parties subject to administrative protective order (APO) of their responsibility concerning the return/destruction or conversion to judicial protective order of proprietary information disclosed under APO in accordance with 19 CFR 351.305(a)(3). Failure to comply is a violation of the APO which may be subject to sanctions.

This notice is published in accordance with sections 751(d)(2) and 777(i) the Act, and 19 CFR 351.218(f)(4).

Dated: May 29, 2015.

Paul Piquado,

Assistant Secretary for Enforcement and Compliance.

[FR Doc. 2015–14069 Filed 6–8–15; 8:45 am]

BILLING CODE 3510–DS–P

[5] *See Continuation.*

DEPARTMENT OF COMMERCE

International Trade Administration

[A–570–952]

Narrow Woven Ribbon With Woven Selvedge From the People's Republic of China: Preliminary Results of Administrative Review; 2013–2014

AGENCY: Enforcement and Compliance, International Trade Administration, Department of Commerce.

DATES: *Effective Date:* June 9, 2015.

SUMMARY: The Department of Commerce (''Department'') is conducting an administrative review of the antidumping duty order on narrow woven ribbon with woven selvedge (''NWR'') from the People's Republic of China (''PRC'') for the period of review (''POR'') September 1, 2013, through August 31, 2014. This review covers one company, Yama Ribbons Co., Ltd. (''Yama Ribbons'').[1] The Department preliminarily finds that Yama Ribbons did not have reviewable transactions during the POR.

FOR FURTHER INFORMATION CONTACT: Karine Gziryan, AD/CVD Operations, Office IV, Enforcement & Compliance, International Trade Administration, U.S. Department of Commerce, 14th Street and Constitution Avenue NW., Washington, DC 20230; telephone: (202) 482–4081.

SUPPLEMENTARY INFORMATION:

Scope of the Order

The products covered by the order are narrow woven ribbons with woven selvedge. The merchandise subject to the order is classifiable under the Harmonized Tariff Schedule of the United States (''HTSUS'') subheadings 5806.32.1020; 5806.32.1030; 5806.32.1050 and 5806.32.1060. Subject merchandise also may enter under HTSUS subheadings 5806.31.00; 5806.32.20; 5806.39.20; 5806.39.30; 5808.90.00; 5810.91.00; 5810.99.90; 5903.90.10; 5903.90.25; 5907.00.60; and 5907.00.80 and under statistical categories 5806.32.1080; 5810.92.9080; 5903.90.3090; and 6307.90.9889. Although the HTSUS subheadings are provided for convenience and customs purposes, the written product description in the *Order* remains dispositive.[2]

Methodology

The Department has conducted this review in accordance with section 751(a)(1)(B) of the Tariff Act of 1930, as amended (''the Act''). For a full description of the methodology underlying our conclusions, *see* Preliminary Decision Memorandum. This memorandum is a public document and is on file electronically via Enforcement and Compliance's Antidumping and Countervailing Duty Centralized Electronic Service System (''ACCESS''). ACCESS is available to registered users at *http://access.trade.gov* and in the Central Records Unit, room 7046 of the main Department of Commerce building. In addition, a complete version of the Preliminary Results Decision Memorandum can be accessed directly on the Internet at *http://www.trade.gov/enforcement/.* The signed Preliminary Results Decision Memorandum and the electronic versions of the Preliminary Results Decision Memorandum are identical in content.

Preliminary Results of Review

The Department preliminarily determines that Yama Ribbons did not have reviewable transactions during the POR.

Disclosure and Public Comment

Interested parties are invited to comment on the preliminary results and may submit case briefs and/or written comments, filed electronically using ACCESS, within 30 days of the date of publication of this notice, pursuant to 19 CFR 351.309(c)(1)(ii). Rebuttal briefs, limited to issues raised in the case briefs, will be due five days after the due date for case briefs, pursuant to 19 CFR 351.309(d). Parties who submit case or rebuttal briefs in this proceeding are requested to submit with each argument a statement of the issue, a summary of the argument not to exceed

[1] *See Initiation of Antidumping and Countervailing Duty Administrative Reviews,* 79 FR 64565 (October 31, 2014) (''*Initiation Notice*''). The Department determined in the underlying investigation that merchandise produced and exported by Yama Ribbons is excluded from the antidumping duty order. *See also Notice of Antidumping Duty Orders: Narrow Woven Ribbons With Woven Selvedge From Taiwan and the People's Republic of China: Antidumping Duty Orders,* 75 FR 53632, (September 1, 2010), as amended in *Narrow Woven Ribbons With Woven Selvedge From Taiwan and the People's Republic of China: Amended Antidumping Duty Orders,* 75 FR 56982 (September 17, 2010) (''*Order*''). However, merchandise which Yama exports but did not produce remains subject to the antidumping duty order on narrow woven ribbons with woven selvedge.

[2] For a complete description of the scope of the order, please see ''Decision Memorandum for Preliminary Results of Antidumping Duty Administrative Review: Narrow Woven Ribbons With Woven Selvedge from the People's Republic of China,'' from Christian Marsh, Deputy Assistant Secretary for Antidumping and Countervailing Duty Operations, to Paul Piquado, Assistant Secretary for Enforcement and Compliance (''Preliminary Decision Memorandum''), dated concurrently with, and hereby adopted by, this notice.

five pages, and a table of statutes, regulations, and cases cited, in accordance with 19 CFR 351.309(c)(2).

Pursuant to 19 CFR 351.310(c), interested parties, who wish to request a hearing, or to participate in a hearing if one is requested, must submit a written request to the Assistant Secretary for Enforcement and Compliance, U.S. Department of Commerce, filed electronically using ACCESS. Electronically filed case briefs/written comments and hearing requests must be received successfully in their entirety by the Department's electronic records system, ACCESS, by 5:00 p.m. Eastern Time, within 30 days after the date of publication of this notice.[3] Hearing requests should contain: (1) The party's name, address and telephone number; (2) the number of participants; and (3) a list of issues to be discussed. Issues raised in the hearing will be limited to those issues raised in the respective case briefs. If a request for a hearing is made, parties will be notified of the time and date of the hearing which will be held at the U.S. Department of Commerce, 1401 Constitution Avenue NW., Washington DC 20230. The Department intends to issue the final results of this administrative review, including the results of its analysis of the issues raised in any written briefs, not later than 120 days after the date of publication of this notice, pursuant to section 751(a)(3)(A) of the Act.

Assessment Rates

Upon issuance of the final results, the Department will determine, and U.S. Customs and Border Protection (''CBP'') shall assess, antidumping duties on all appropriate entries covered by this review.[4] The Department intends to issue assessment instructions to CBP 15 days after the publication date of the final results of this review. Pursuant to the Department's practice in NME cases, if we continue to determine that Yama Ribbons had no shipments of the subject merchandise, any suspended entries that entered under that exporter's case number (*i.e.,* at that exporter's rate) will be liquidated at the PRC-wide rate of 247.65 percent. For a full discussion of this practice, *see Non-Market Economy Antidumping Proceedings: Assessment of Antidumping Duties,* 76 FR 65694 (October 24, 2011).

Cash Deposit Requirements

The following cash deposit requirements will be effective upon publication of the final results of this administrative review for all shipments of the subject merchandise entered, or withdrawn from warehouse, for consumption on or after the publication date of the final results of review, as provided by section 751(a)(2)(C) of the Act: (1) For exports of merchandise made by Yama Ribbons of merchandise it did not produce, the cash deposit rate is the PRC-wide rate of 247.65, as stated in the Order;[5] (2) for previously investigated or reviewed PRC and non-PRC exporters which are not under review in this segment of the proceeding but which have separate rates, the cash deposit rate will continue to be the exporter-specific rate published for the most recent period; (3) for all PRC exporters of subject merchandise that have not been found to be entitled to a separate rate the cash deposit rate will be the PRC-wide rate of 247.65 percent; and (4) for all non-PRC exporters of subject merchandise which have not received their own rate, the cash deposit rate will be the rate applicable to the PRC exporter(s) that supplied that non-PRC exporter. These deposit requirements, when imposed, shall remain in effect until further notice.

Notification to Importers

This notice also serves as a preliminary reminder to importers of their responsibility under 19 CFR 351.402(f)(2) to file a certificate regarding the reimbursement of antidumping duties prior to liquidation of the relevant entries during this review period. Failure to comply with this requirement could result in the Department's presumption that reimbursement of antidumping duties occurred and the subsequent assessment of double antidumping duties.

We are issuing and publishing these results in accordance with sections 751(a)(1) and 777(i)(1) of the Act and 19 CFR 351.213.

Dated: May 29, 2015.

Paul Piquado,

Assistant Secretary for Enforcement and Compliance.

Appendix

List of Topics Discussed in the Preliminary Results Decision Memorandum

Summary
Background
Scope of the Order
Discussion of the Methodoogy
Preliminary Determination of No Shipments
Recommendation

[FR Doc. 2015–14073 Filed 6–8–15; 8:45 am]

BILLING CODE 3510–DS–P

[3] *See* 19 CFR 351.310(c).

[4] *See* 19 CFR 351.212(b)(1).

[5] *Order* at 75 FR 53632.

DEPARTMENT OF COMMERCE

National Institute of Standards and Technology

National Conference on Weights and Measures 100th Annual Meeting

AGENCY: National Institute of Standards and Technology, Commerce.

ACTION: Notice.

SUMMARY: The 100th Annual Meeting of the National Conference on Weights and Measures (NCWM) will be held in Philadelphia, Pennsylvania, from Sunday, July 19, 2015, through Thursday, July 23, 2015. This notice contains information about significant items on the NCWM Committee agendas but does not include all agenda items. As a result, the items are not consecutively numbered.

DATES: The meeting will be held from Sunday, July 19, 2015, through Thursday, July 23, 2015. The complete meeting schedule is available at www.ncwm.net.

ADDRESSES: This meeting will be held at the Sheraton Philadelphia Society Hill Hotel, 1 Dock Street, Philadelphia, Pennsylvania 19106.

FOR FURTHER INFORMATION CONTACT: Ms. Carol Hockert, Chief, Office of Weights and Measures, National Institute of Standards and Technology,100 Bureau Drive, Stop 2600, Gaithersburg, MD 20899–2600. You may also contact Ms. Hockert at (301) 975–5507 or by email at *carol.hockert@nist.gov*. The meeting is open to the public, but a paid registration is required. Please see the NCWM Web site (www.ncwm.net) to view the meeting agendas, registration forms, and hotel reservation information.

SUPPLEMENTARY INFORMATION: Publication of this notice on the NCWM's behalf is undertaken as a public service; NIST does not endorse, approve, or recommend any of the proposals or other information contained in this notice or in the publications of the NCWM.

The NCWM is an organization of weights and measures officials of the states, counties, and cities of the United States, federal agencies, and representatives from the private sector. These meetings bring together government officials and representatives of business, industry, trade associations, and consumer organizations on subjects related to the field of weights and measures technology, administration, and enforcement. NIST participates to encourage cooperation between federal agencies and the states in the

development of legal metrology requirements. NIST also promotes uniformity among the states in laws, regulations, methods, and testing equipment that comprise the regulatory control of commercial weighing and measuring devices, packaged goods, and other trade and commerce issues.

The following are brief descriptions of some of the significant agenda items that will be considered at the NCWM Annual Meeting. Comments will be taken on these and other issues during several public comment sessions. This meeting also includes work sessions in which the Committees may also accept comments, and where they will finalize recommendations for possible adoption at this meeting. The Committees may withdraw or carryover items that need additional development.

Some of the items listed below provide notice of projects under development by groups working to develop specifications, tolerances, and other requirements for devices used in the retail sales of engine fuels and the establishment of approximate gallon and liter equivalents to diesel fuel that would be used in marketing both compressed and liquefied natural gas. These notices are intended to make interested parties aware of these development projects and to make them aware that reports on the status of the project will be given at the Annual Meeting. The notices are also presented to invite the participation of manufacturers, experts, consumers, users, and others who may be interested in these efforts.

The Specifications and Tolerances Committee (S&T Committee) will consider proposed amendments to NIST Handbook 44, ''Specifications, Tolerances, and other Technical Requirements for Weighing and Measuring Devices.'' Those items address weighing and measuring devices used in commercial applications, that is, devices that are used to buy from or sell to the public or used for determining the quantity of products or services sold among businesses. Issues on the agenda of the NCWM Laws and Regulations Committee (L&R Committee) relate to proposals to amend NIST Handbook 130, ''Uniform Laws and Regulations in the area of Legal Metrology and Engine Fuel Quality'' and NIST Handbook 133, ''Checking the Net Contents of Packaged Goods.''

NCWM Specifications and Tolerances Committee

The following items are proposals to amend NIST Handbook 44:

Scales (Including Weigh-in-Motion Vehicle Scales for Use in the Enforcement of Highway Load Limits)

Item 320–4 Weigh-in-Motion Vehicle Scales for Use in Highway Weight Enforcement

The S&T Committee is recommending adoption of a new tentative code to be included in NIST Handbook 44 that will include the specifications, tolerances, and other technical requirements for the vehicle scales used by highway weight enforcement agencies to determine the axle loads, tandem axle loads, and gross vehicle weights of trucks and other large highway vehicles while they are in motion. A tentative code has a trial or experimental status. It is not intended to be enforced until adopted as a permanent code by the NCWM. The proposed tentative code includes recommended tests and tolerances for vehicle scales used to weigh vehicles in motion as well as user requirements that will ensure devices are maintained and operated properly, allowing weighing results to be used to carry out highway weight enforcement programs across the nation. The intended application of these scales is to weigh vehicles, while in motion, for the purpose of screening and sorting the vehicles to determine if a static weighment is necessary.

Belt-Conveyor Scale Systems

Item 321–1 Belt-Conveyor Scale Systems

Belt-conveyor scales are used in a wide variety of applications for weighing coal, grain, ore, and many other raw materials or products. Currently, only scales that are fully integrated into a conveyor system are permitted under NIST Handbook 44. The S&T Committee is recommending for adoption new definitions and proposals to broaden the scope of the requirements to allow fully ''self-contained weigh-belt systems'' to be covered by the specifications, tolerances, and other technical requirements in NIST Handbook 44 so these devices may be utilized in commercial transactions.

Liquid Measuring Devices

Item 330–2 S.2.2. Categories of Device and Methods of Sealing

The S&T Committee is recommending for adoption language that would allow device manufacturers to supply required security and configuration related data in ''event loggers'' (*i.e.,* digital systems that keep track of the number of times a calibration event occurs) to weights and measures officials and service personnel utilizing digital communications (*e.g.,* cellular or Internet connections) or other electronic means (*e.g.,* USB flash memory drive) in addition to the current requirement to provide a printed record of this information. This information is used to ascertain how many and what type of calibrations and configuration changes were made to a weighing and measuring device since the last official inspection or service. The S&T Committee originally considered a proposal which would allow the information to be provided in *lieu* of a printed record. However, based on comments received and an evaluation of the costs, practicality, and other aspects of the proposal including the data security and privacy concerns that may arise, the Committee agreed that the electronic form of the information is only permitted as a supplement to the printed record.

Liquefied Petroleum Gas and Anhydrous Ammonia Liquid-Measuring Devices

Item 332–2 N.3. Test Drafts—Use of Transfer Standards for Calibration and Verification

The S&T Committee has designated a ''Developing'' item on its agenda to allow the development of a proposal that would recognize the use of calibrated transfer standards (also called ''master meters'') in the verification and calibration of Liquefied Petroleum Gas and Anhydrous Ammonia Liquid-Measuring Devices. Currently, most official tests of these devices are conducted using volumetric test measures or using gravimetric testing. The proposal outlined in this item includes requirements for a minimum test draft, and would allow the use of ''master meters'' in both service-related and official testing. This item is also intended to explore the possibility of expanding the use of transfer standards to other types of measuring devices, including those used to measure petroleum at terminals and retail outlets and to meters used to deliver home heating fuel and other products.

Mass Flow Meters

Item 337–1 Diesel Energy Equivalents for Compressed and Liquefied Natural Gas

Natural gas is sold in the marketplace in both compressed (CNG) and liquefied (LNG) states as alternative fuel choices to gasoline and diesel fuel. The S&T Committee has recommended revisions to NIST Handbook 44 to define volume units for CNG and LNG in terms of the energy equivalents for a liter or gallon of diesel fuel. The availability of these

values should enable consumers to compare the cost and mileage economy of different fuels, and so enable informed purchasing decisions when considering the use, purchase, or lease of vehicles equipped to operate on different fuels.

Taximeters (and GPS Devices When Used in Transportation Services)

Items 354–1, 354–2, 354–3, 354–4, and 354–5

The S&T Committee is recommending for adoption this group of proposals (listed above), which includes proposed revisions and updates to the Taximeter Code in NIST Handbook 44 to address changes in technology related to indicating and recording elements (*i.e.,* printers) and operational features including the indications required to be presented to passengers.

Item 354–6 U.S. National Working Group on Taximeters and Global Positioning System-Based Systems for Time and Distance Measurement

The S&T Committee will hear a progress report from a national working group that is studying the use of Global Positioning Systems and smart phone/web based applications in transportation services in order to develop proposed specifications, tolerances, and other technical requirements to ensure accuracy and transparency for passengers, drivers, and businesses for inclusion in NIST Handbook 44. This item is designated as a ''Developing Item'' on the Committee's agenda to allow further study and refinement of these issues.

Other Items

Item 360–5 Electric Vehicle Fueling and Submetering

The S&T Committee is recommending adoption of a tentative code for use in electric vehicle charging and submetering for inclusion in NIST Handbook 44. The code was developed by a NIST U.S. National Working Group that continues to further refine the specifications, tolerances, and other technical requirements to ensure accuracy and transparency for drivers of electric vehicles and power resellers. The S&T Committee is also recommending for adoption proposed changes to the Section 5.55. ''Timing Devices'' in NIST Handbook 44 to address requirements for the timing mechanisms that are likely to be used in some recharging systems to determine additional charges for other services (*e.g.,* parking).

NCWM Laws and Regulations Committee (L&R Committee)

The following items are proposals to amend NIST Handbook 130 or NIST Handbook 133:

NIST Handbook 130—Section on Uniform Regulation for the Method of Sale of Commodities

Item 232–3 Animal Bedding

The L&R Committee is recommending the adoption of a uniform method of sale for animal bedding that will enhance the ability of consumers to make value comparisons and will ensure fair competition. Animal Bedding is generally defined as any material, except for baled straw, that is kept, offered or exposed for sale or sold to retail consumers for primary use as a medium for any pet or companion or livestock animal to nest or eliminate waste. If adopted, the proposal will require packers to advertise and sell packages of animal bedding on the basis of the expanded volume of the bedding. Most packages of animal bedding are compressed during packaging and the expanded volume is the amount of product that consumers will recover through unwrapping and decompressing the bedding according to the instructions provided by the packer. See also Item 260–3 for proposed Test Procedures for Verifying the Expanded Volume Declaration on Packages of Animal Bedding.

NIST Handbook 133—''Checking the Net Contents of Packaged Goods''

Item 260–1 Chitterling Test Procedure

The L&R Committee is recommending for adoption a proposal that will add a test procedure and purge allowance to NIST Handbook 133 so the drainage equipment and methods used by state and local weights and measures officials are identical to those used by the Food Safety and Inspection Service of the U.S. Department of Agriculture in packing plants. This test procedure will also be used in verifying the amount of purge from beef tripe.

Authority: 15 U.S.C. 272(b)(6).

Richard Cavanagh,

Acting Associate Director for Laboratory Programs.

[FR Doc. 2015–14007 Filed 6–8–15; 8:45 am]

BILLING CODE 3510–13–P

DEPARTMENT OF COMMERCE

National Oceanic and Atmospheric Administration

RIN 0648–XD987

Center for Independent Experts; Public Meeting

AGENCY: National Marine Fisheries Service (NMFS), National Oceanic and Atmospheric Administration (NOAA), Commerce.

ACTION: Notice of public meeting.

SUMMARY: NMFS has requested the Center for Independent Experts (CIE) meet to conduct a peer review of the agency's stock assessment of the General Model for Alaskan Crabs Stocks (GMACs) and its implementation for Bristol Bay Red King Assessment (BBRKC). This notice lists the time and place of that meeting.

DATES: The workshop will be held June 29–July 1, 2015, from 9 a.m. to 5 p.m.

ADDRESSES: The meeting will be held at the Alaska Fishery Science Center (AFSC), 7600 Sand Point Way NE., Building 4, Conference Room, Seattle, WA.

FOR FURTHER INFORMATION CONTACT: Jim Ianelli, 206–526–6510.

SUPPLEMENTARY INFORMATION: The Agenda is subject to change, and the latest version will be posted at *http://www.npfmc.org.*

Special Accommodations

The meeting is physically accessible to people with disabilities. Requests for sign language interpretation or other auxiliary aids should be directed to Jim Ianelli at 206–526–6510 at least 7 working days prior to the meeting date.

Dated: June 3, 2015

Emily H. Menashes,

Acting Director, Office of Sustainable Fisheries, National Marine Fisheries Service.

[FR Doc. 2015–13989 Filed 6–8–15; 8:45 am]

BILLING CODE 3510–22–P

DEPARTMENT OF COMMERCE

Patent and Trademark Office

Submission for OMB Review; Comment Request; ''Third-Party Submissions and Protests''

The Department of Commerce will submit to the Office of Management and Budget (OMB) for clearance the following proposal for collection of information under the provisions of the Paperwork Reduction Act (44 U.S.C. chapter 35).

Agency: United States Patent and Trademark Office, Commerce.

Title: Third-Party Submissions and Protests.

OMB Control Number: 0651–0062.

Form Number(s): PTO/SB/429.

Type of Request: Renewal.

Number of Respondents: 1,560.

Average Time per Response: 10 hours.

Burden Hours: 15,600.

Cost Burden: $237,619.25.

Needs and Uses: This information collection (the information collected via third-party submissions under 37 CFR 1.290 and protests under 37 CFR 1.291) is necessary so that the public may contribute to the quality of issued patents. Through the third-party submissions, members of the public may submit patents, published patent applications, or other printed publications of potential relevance to the examination of an application in accordance with 37 CFR 1.290. Through the protests, members of the public may call attention to any facts that—in the protestor's opinion—would make the grant of a patent improper. The USPTO will use this information, as appropriate, during the patent examination process to assist in evaluating the patent application and to, where necessary, avoid the issuance of an invalid patent.

Affected Public: Individuals or households; businesses or other for-profits; and not-for-profit institutions.

Frequency: On occasion.

Respondent's Obligation: Required to Obtain or Retain Benefits.

OMB Desk Officer: Nicholas A. Fraser, email: *Nicholas_A._Fraser@omb.eop.gov*.

Once submitted, the request will be publicly available in electronic format through *reginfo.gov*. Follow the instructions to view Department of Commerce collections currently under review by OMB.

Further information can be obtained by:

- Email: *InformationCollection@uspto.gov.* Include ''0651–0062 copy request'' in the subject line of the message.
- Mail: Marcie Lovett, Records Management Division Director, Office of the Chief Information Officer, United States Patent and Trademark Office, P.O. Box 1450, Alexandria, VA 22313–1450.

Written comments and recommendations for the proposed information collection should be sent on or before July 9, 2015 to Nicholas A. Fraser, OMB Desk Officer, via email to *Nicholas_A._Fraser@omb.eop.gov,* or by fax to 202–395–5167, marked to the attention of Nicholas A. Fraser.

Dated: June 1, 2015.

Marcie Lovett,

Records Management Division Director, USPTO, Office of the Chief Information Officer.

[FR Doc. 2015–14090 Filed 6–8–15; 8:45 am]

BILLING CODE 3510–16–P

DEPARTMENT OF COMMERCE

Patent and Trademark Office

Submission for OMB Review; Comment Request; ''Post Registration (Trademark Processing)''

The United States Patent and Trademark Office (USPTO) will submit to the Office of Management and Budget (OMB) for clearance the following proposal for collection of information under the provisions of the Paperwork Reduction Act (44 U.S.C. chapter 35).

Agency: United States Patent and Trademark Office, Commerce.

Title: Post Registration (Trademark Processing).

OMB Control Number: 0651–0055.

Form Number(s):

- PTO Form 1563
- PTO Form 1573
- PTO Form 1583
- PTO Form 1597
- PTO Form 1963
- PTO Global Form

Type of Request: Regular.

Number of Respondents: 185,047 responses per year. Of this total, the USPTO expects that 175,846 responses will be submitted through TEAS and 9,201 will be submitted on paper.

Average Hours Per Response: The USPTO estimates that it will take approximately 5 minutes (0.08 hours) to 35 minutes (0.58 hours) to complete a single item in this collection, depending on the instrument used. This includes the time to gather the necessary information, create the documents, and submit the completed request to the USPTO.

Burden Hours: 43,095.72 hours.

Cost Burden: $54,392,518.33.

Needs and Uses:

The United States Patent and Trademark Office (USPTO) administers the Trademark Act, 15 U.S.C. 1051 *et seq.,* which provides for the Federal registration of trademarks, service marks, collective trademarks and service marks, collective membership marks, and certification marks. Individuals and businesses that use or intend to use such marks in commerce may file an application to register their marks with the USPTO.

Such individuals and businesses may also submit various communications to the USPTO, including requests to amend their registrations to delete goods or services that are no longer being used by the registrant. Registered marks remain on the register for ten years and can be renewed, but will be cancelled unless the owner files with the USPTO a declaration attesting to the continued use (or excusable non-use) of the mark in commerce, and a renewal application, within specific deadlines. Applicants may also request to amend or divide a registration, respond to a post-registration Office action, and surrender a registration.

The rules implementing the Act are set forth in 37 CFR part 2. These rules mandate that each register entry include the mark, the goods and/or services in connection with which the mark is used, ownership information, dates of use, and certain other information. The USPTO also provides similar information concerning pending applications. The register and pending application information may be accessed by an individual or by businesses to determine the availability of a mark. By accessing the USPTO's information, parties may reduce the possibility of initiating use of a mark previously adopted by another. Thus, the Federal trademark registration process may reduce unnecessary litigation and its accompanying costs and burdens.

Affected Public: Individuals or households; businesses or other for-profit institutions, and not-for-profit institutions.

Frequency: On occasion.

Respondent's Obligation: Required to Obtain or Retain Benefits.

OMB Desk Officer: Nicholas A. Fraser, email: *Nicholas_A._Fraser@omb.eop.gov.*

Once submitted, the request will be publicly available in electronic format through reginfo.gov. Follow the instructions to view Department of Commerce collections currently under review by OMB.

Further information can be obtained by:

- Email: *InformationCollection@uspto.gov.* Include ''0651–0055 copy request'' in the subject line of the message.
- Mail: Marcie Lovett, Records Management Division Director, Office of the Chief Information Officer, United States Patent and Trademark Office, P.O. Box 1450, Alexandria, VA 22313–1450.

Written comments and recommendations for the proposed information collection should be sent on or before *July 9, 2015* to Nicholas A. Fraser, OMB Desk Officer, via email to

Nicholas_A._Fraser@omb.eop.gov, or by fax to 202 395–5167, marked to the attention of Nicholas A. Fraser.

Dated: June 1, 2015.

Marcie Lovett,

Records Management Division Director, USPTO, Office of the Chief Information Officer.

[FR Doc. 2015–14085 Filed 6–8–15; 8:45 am]

BILLING CODE 3510–16–P

DEPARTMENT OF COMMERCE

United States Patent and Trademark Office

Matters Related to First Inventor To File

ACTION: Proposed collection; comment request.

SUMMARY: The United States Patent and Trademark Office (USPTO), as part of its continuing effort to reduce paperwork and respondent burden, invites the general public and other Federal agencies to comment on proposed and/or continuing information collections, as required by the Paperwork Reduction Act of 1995, Public Law 104–13 (44 U.S.C. 3506(c)(2)(A)).

DATES: Written comments must be submitted on or before August 10, 2015.

ADDRESSES: Written comments may be submitted by any of the following methods:

- *Email: InformationCollection@uspto.gov.* Include ''0651–0071 comment'' in the subject line of the message.
- *Federal Rulemaking Portal: http://www.regulations.gov.*
- *Mail:* Marcie Lovett, Records Management Division Director, Office of the Chief Information Officer, United States Patent and Trademark Office, P.O. Box 1450, Alexandria, VA 22313–1450.

FOR FURTHER INFORMATION CONTACT: Requests for additional information should be directed to Raul Tamayo, Senior Legal Advisor, Office of Patent Legal Administration, United States Patent and Trademark Office, P.O. Box 1450, Alexandria, VA 22313–1450; by telephone at 571–272–7728; or by email to *Raul.Tamayo@uspto.gov* with ''0651–0071 comment'' in the subject line. Additional information about this collection is also available at *http://www.reginfo.gov* under ''Information Collection Review.''

SUPPLEMENTARY INFORMATION:

I. Abstract

The Leahy-Smith America Invents Act (AIA) was enacted into law on September 16, 2011. *See* Public Law 112–29, 125 Stat. 283 (2011). Section 3 of the AIA, *inter alia,* amended 35 U.S.C. 102 and 103 consistent with the objectives of the AIA, including the conversion of the United States patent system from a ''first to invent'' system to a ''first inventor to file'' system. The changes in section 3 of the AIA went into effect on March 16, 2013, but apply only to certain applications filed on or after March 16, 2013.

37 CFR 1.55(j), 1.78(a)(6) and 1.78(d)(6) require information needed to assist the USPTO in determining whether an application is subject to 35 U.S.C. 102 and 103 as amended by the AIA or 35 U.S.C. 102 and 103 in effect on March 15, 2013. 37 CFR 1.110 requires information needed to identify the inventor, and ownership on the effective filing date, of each claimed invention in an application or patent with more than one named inventor, when necessary for purposes of a USPTO proceeding. 37 CFR 1.130, 1.131, and 1.132 provide for the submission of affidavits or declarations needed (i) to show that a disclosure was by the inventor or joint inventor, or was by a party who obtained the subject matter from the inventor or a joint inventor (1.130), (ii) to show that there was a prior public disclosure by the inventor or a joint inventor, or by a party who obtained the subject matter from the inventor or a joint inventor (1.130), (iii) to establish prior invention or to disqualify a commonly owned patent or published application as prior art (1.131), or (iv) to submit evidence to traverse a rejection or objection on a basis not otherwise provided for (1.132).

The USPTO accounts for both electronic and paper submissions in this collection.

II. Method of Collection

Electronically when using the USPTO online filing system EFS-Web, or by mail, facsimile, or hand delivery.

III. Data

OMB Number: 0651–0071.

IC Instruments and Forms: The individual instruments in this collection, as well as any associated forms, are listed in the hourly cost burden table below.

Type of Review: Revision of a Previously Existing Information Collection.

Affected Public: Individuals or households; businesses or other for-profits; and not-for-profit institutions.

Estimated Number of Respondents: The USPTO estimates that it will receive a total of approximately 50,150 responses per year for this collection, of which approximately 12,538 will be filed by small entities. The USPTO estimates that approximately 48,646 of the responses for this collection will be submitted electronically via EFS-Web.

These estimates are based on the Agency's long-standing institutional knowledge of and experience with the type of information collected by these items.

Estimated Time per Response: The USPTO estimates that the responses in this collection will take the public from 2 to 10 hours to complete. This includes the time to gather the necessary information, create the document, and submit the completed request to the USPTO. Specifically, the USPTO estimates that: (1) Preparing an affidavit or declaration under 37 CFR 1.130, 1.131, or 1.132 will require, on average, 10 hours; (2) identifying under 37 CFR 1.55(j), 1.78(a)(6), or 1.78(d)(6) whether there is any claim or subject matter not disclosed in the prior foreign, provisional, or non-provisional application will require, on average, 2 hours; and (3) identifying under 37 CFR 1.110 inventorship and ownership of the subject matter of claims will require, on average, 2 hours. The USPTO calculates that, on balance, it takes the same amount of time to gather the necessary information, create the document, and submit it to the USPTO, whether the applicant submits the information in paper form or electronically.

These estimates are based on the Agency's long-standing institutional knowledge of and experience with the type of information collected and the length of time necessary to complete responses containing similar or like information.

Estimated Total Annual Respondent Burden Hours: 340,300 hours.

Estimated Total Annual Respondent (Hourly) Cost Burden: $132,376,700. The USPTO expects that attorneys will complete the instruments associated with this information collection. The professional hourly rate for attorneys is $389. Using this hourly rate, the USPTO estimates $132,376,700 per year for the total hourly costs associated with respondents.

IC No.	Information collection instrument	Estimated time for response (minutes) (a)	Estimated annual responses (b)	Estimated annual burden hours (a) × (b)/60 = (c)	Rate ($/hr)
1	Electronic Submissions Under 37 CFR 1.55(j)	120	9,700	19,400	$389.00
1	Submissions Under 37 CFR 1.55(j)	120	300	600	389.00
2	Electronic Submissions Under 37 CFR 1.78(a)(6)	120	7,760	15,520	389.00
2	Submissions Under 37 CFR 1.78(a)(6)	120	240	480	389.00
3	Electronic Submissions Under 37 CFR 1.78(d)(6)	120	1,940	3,880	389.00
3	Submissions Under 37 CFR 1.78(d)(6)	120	60	120	389.00
4	Electronic Identification of Inventorship and Ownership of the Subject Matter of Individual Claims under 37 CFR 1.110.	120	146	292	389.00
4	Identification of Inventorship and Ownership of the Subject Matter of Individual Claims under 37 CFR 1.110.	120	4	8	389.00
5	Electronic Rule 1.130, 1.131, and 1.132 Affidavits or Declarations.	600	29,100	291,000	389.00
5	Rule 1.130, 1.131, and 1.132 Affidavits or Declarations	600	900	9,000	389.00
Total			50,150	340,300	

Estimated Total Annual (Non-hour) Cost Burden: $8,475.50. The USPTO estimates that the total annualized (non-hour) cost burden for this collection is due to postage costs of $8,475.50 per year. Customers may incur postage costs when submitting some of the items covered by this collection to the USPTO by mail. The USPTO expects that approximately 97 percent of the responses in this collection will be submitted electronically. Of the remaining 3 percent, the vast majority—98 percent—will be submitted by mail, for a total of 1,474 mailed submissions. The average first class USPS postage cost for these items is estimated at $5.75; the cost of a one pound mailed submission in a flat rate envelope. Therefore, the USPTO estimates that the postage costs for the mailed submissions in this collection will total $8,475.50.

IV. Request for Comments

Comments are invited on:

(a) Whether the proposed collection of information is necessary for the proper performance of the functions of the agency, including whether the information shall have practical utility;

(b) the accuracy of the agency's estimate of the burden (including hours and cost) of the proposed collection of information, including the validity of the methodology and assumptions used;

(c) ways to enhance the quality, utility, and clarity of the information to be collected; and

(d) ways to minimize the burden of the collection of information on respondents, including through the use of automated collection techniques or other forms of information technology, *e.g.,* permitting electronic submission of responses.

Comments submitted in response to this notice will be summarized or included in the request for OMB approval of this information collection; they will also become a matter of public record.

Dated: June 1, 2015.

Marcie Lovett,

Records Management Division Director, USPTO, Office of the Chief Information Officer.

[FR Doc. 2015–14093 Filed 6–8–15; 8:45 am]

BILLING CODE 3510–16–P

DEPARTMENT OF COMMERCE

United States Patent and Trademark Office

Submission for OMB Review; Comment Request; ''Trademark Petitions''

The United States Patent and Trademark Office (USPTO) will submit to the Office of Management and Budget (OMB) for clearance the following proposal for collection of information under the provisions of the Paperwork Reduction Act (44 U.S.C. chapter 35).

Agency: United States Patent and Trademark Office, Commerce.

Title: Trademark Petitions.

OMB Control Number: 0651–0061.

Form Number(s):

- N/A.

Type of Request: Regular.

Number of Respondents: 2,988 per year.

Estimated Time per Response: The USPTO estimates that the items in this collection have an average response time of 55 minutes (0.92 hours), and that it will take approximately 35 minutes (0.58 hours) to 75 minutes (1.25 hours) to complete this information. This includes the time to gather the necessary information, create the documents, and submit the completed request to the USPTO.

Burden Hours: 2,749.67.

Cost Burden: $22,660.19.

Needs and Uses: The United States Patent and Trademark Office (USPTO) administers the Trademark Act, 15 U.S.C. 1051 *et seq.,* which provides for the registration of trademarks, service marks, collective trademarks and collective service marks, collective membership marks, and certification marks. Individuals and businesses that use or intend to use such marks in commerce may file an application to register their marks with the USPTO.

Individuals and businesses may also submit various communications to the USPTO, including letters of protest, requests to make special, responses to petition inquiry letters, petitions to make special, requests to restore a filing date, and requests for reinstatement.

The USPTO uses the information described in this collection to process letters of protest, requests to make special, responses to petition inquiry letters, petitions to make special, requests to restore filing date, and requests for reinstatement. The information is used by the public for a variety of private business purposes related to establishing and enforcing trademark rights. Information relating to the registration of a trademark is made publicly available by the USPTO. The release of information in a letter of protest is controlled and may be available upon request only.

Affected Public: Individuals and households; Businesses and other for-profit organizations; Not-for-profit institutions.

Frequency: Annually.

Respondent's Obligation: Required to obtain or retain benefits.

OMB Desk Officer: Nicholas A. Fraser, email: *Nicholas_A._Fraser@omb.eop.gov*.

Once submitted, the request will be publicly available in electronic format through *reginfo.gov*. Follow the instructions to view Department of Commerce collections currently under review by OMB.

Further information can be obtained by:

- Email: *InformationCollection@uspto.gov*. Include ''0651–0061 copy request'' in the subject line of the message.
- Mail: Marcie Lovett, Records Management Division Director, Office of the Chief Information Officer, United States Patent and Trademark Office, P.O. Box 1450, Alexandria, VA 22313–1450.

Written comments and recommendations for the proposed information collection should be sent on or before July 9, 2015 to Nicholas A. Fraser, OMB Desk Officer, via email to *Nicholas_A._Fraser@omb.eop.gov,* or by fax to 202–395–5167, marked to the attention of Nicholas A. Fraser.

Dated: June 1, 2015.

Marcie Lovett,

Records Management Division Director, USPTO, Office of the Chief Information Officer.

[FR Doc. 2015–14083 Filed 6–8–15; 8:45 am]

BILLING CODE 3510–16–P

DEPARTMENT OF COMMERCE

Patent and Trademark Office

Patent Review and Derivation Proceedings

ACTION: Proposed collection; comment request.

SUMMARY: The United States Patent and Trademark Office (USPTO), as part of its continuing effort to reduce paperwork and respondent burden, invites the general public and other Federal agencies to comment on proposed and/or continuing information collections, as required by the Paperwork Reduction Act of 1995, Public Law 104–13 (44 U.S.C. 3506(c)(2)(A)).

DATES: Written comments must be submitted on or before August 10, 2015.

ADDRESSES: Written comments may be submitted by any of the following methods:

- *Email: InformationCollection@uspto.gov.* Include ''0651–0069 comment'' in the subject line of the message.
- *Federal Rulemaking Portal: http://www.regulations.gov.*
- *Mail:* Marcie Lovett, Records Management Division Director, Office of the Chief Information Officer, United States Patent and Trademark Office, P.O. Box 1450, Alexandria, VA 22313–1450.

FOR FURTHER INFORMATION CONTACT: Requests for additional information should be directed to Susan Mitchell, Lead Administrative Patent Judge, Patent Trial and Appeal Board, United States Patent and Trademark Office (USPTO), P.O. Box 1450, Alexandria, VA 22313– 1450; by telephone at 571–272–8715; or by email at *susan.mitchell@uspto.gov* with ''0651–0069 comment'' in the subject line. Additional information about this collection is also available at *http://www.reginfo.gov* under ''Information Collection Review.''

SUPPLEMENTARY INFORMATION:

I. Abstract

The USPTO is required by 35 U.S.C. 131 and 151 to examine applications and, when appropriate, issue applications as patents. The Leahy-Smith America Invents Act, which was enacted into law on September 16, 2011, provided for many changes to the procedures of the Patent Trial and Appeal Board (''PTAB'' or ''Board'', formerly the Board of Patent Appeals and Interference) procedures. See Public Law 112–29, 125 Stat. 284 (2011). These changes included the introduction of *inter partes* review, post-grant review, derivation proceedings, and the transitional program for covered business method patents. In 2012, six rulemaking actions were taken to propose and implement new rules of practice for the multiple reviews and proceedings impacted by the items contained within this information collection.

This renewal seeks to enable the continuation of the review and proceeding processes outlined in the information collection below. The public will use this information collection to petition the Board to initiate *inter partes* reviews, post-grant reviews, covered business method patent reviews, and derivation proceedings, as well as initiate other actions, and to ensure that the associated fees and documentation are submitted to the USPTO.

II. Method of Collection

Electronically if applicants submit the information using the Patent Review Processing System (PRPS). Applicants may be able to submit the information via email if PRPS is unavailable, or by Priority Mail Express® if both PRPS and the Board's email address are unavailable.

III. Data

OMB Number: 0651–0069.

IC Instruments and Forms: The individual instruments in this collection, as well as their associated forms, are listed in the table below.

Type of Review: Revision of a Previously Existing Information Collection

Affected Public: Businesses or other for-profit organizations; individuals or households; not-for-profit institutions; Federal Government; and state, local, or tribal governments.

Estimated Number of Respondents: The USPTO estimates that this collection will generate approximately 11,349 responses per year. Of this total, the USPTO expects that 11,274 responses will be submitted through an electronic portal such as PRPS and 75 will be submitted on paper.

Estimated Time per Response: The USPTO estimates that it will take the public an average of 128.6 hours to complete an individual form in this collection, with estimated response times for individual forms ranging between approximately 6 minutes and approximately 165 hours and 18 minutes (0.10 hours to 165.3 hours) to complete, depending on the situation and collection tool used.

The time per response, estimated annual responses, and estimated annual hour burden associated with each instrument in this information collection is shown in the table below.

Estimated Total Annual Respondent Burden Hours: 1,459,184 hours.

Estimated Total Annual Respondent (Hourly) Cost Burden: $567,622,576. The USPTO expects that attorneys will complete the instruments associated with this information collection. The professional hourly rate for an attorney is $389. Using this hourly rate, the USPTO estimates $567,622,576 per year for the total hourly costs associated with respondents.

IC No.	Item	Hours (a)	Estimated Annual Responses (b)	Burden (hrs/yr) (a) × (b) = (c)	Rate ($/hr)
1	Petition for *Inter Partes* Review	124.0	1,685	208,940	$389.00
2	Petition for Post-Grant Review or Covered Business Method Patent Review.	165.3	181	29,919.3	389.00
3	Petition for Derivation	165.3	3	495.9	389.00
4	Patent Owner Preliminary Response to Petition for Initial *Inter Partes* Review.	91.6	1,109	101,584.4	389.00
5	Patent Owner Preliminary Response to Petition for Initial Post-Grant Review or Covered Business Method Patent Review.	91.6	134	12,274.4	389.00
6	Request for Rehearing	80.0	272	21,760	389.00
7	Motions, Replies and Oppositions After Institution in *Inter Partes* Review.	158.0	5,901	932,358	389.00
8	Motions, Replies and Oppositions After Institution in Post-Grant Review or Covered Business Method Review.	148.0	665	98,420	389.00
9	Motions, Replies and Oppositions in Derivation Proceeding.	120.0	7	840	389.00
10	Request for Oral Hearing	18.3	392	7,173.6	389.00
11	Request to Treat a Settlement as Business Confidential	2.0	397	794	389.00
12	Settlement	100.0	446	44,600	389.00
13	Arbitration Agreement and Award	4.0	2	8	389.00
14	Request to Make a Settlement Agreement Available	1.0	1	1	389.00
15	Notice of Judicial Review of a Board Decision (e.g., Notice of Appeal Under 35 U.S.C. § 142).	0.1	154	15.4	389.00
Totals			11,349	1,459,184	

Estimated Total Annual (Non-hour) Respondent Cost Burden: $60,404,425.50. There are no capital start-up or maintenance costs associated with this information collection. However, this collection does have annual (non-hour) costs in the form of filing fees and postage costs. The total annual (non-hour) costs for this collection are calculated in the accompanying tables.

Filing Fees

The IC items in this collection that contain filing fees are listed in the table below.

IC No.	Item	Responses (yr) (a)	Filing fees (b)	Total cost (yr) (a) × (b) = (c)
1	Petition for *Inter Partes* Review	1,685	$31,400.00 (average)	$52,909,000.00
2	Petition for Post-Grant Review or Covered Business Method Patent Review.	181	41,400.00 (average)	7,493,400.00
3	Petition for Derivation	3	400.00	1,200.00
14	Request to Make a Settlement Agreement Available	1	400.00	400.00
Totals		1,870		60,404,000.00

Postage Costs

Customers may incur postage costs when submitting two of the Information Collection instruments covered by this collection to the USPTO by mail. Only the Petition for *Inter Partes* Review and the Motions, Replies, and Oppositions After Institution in *Inter Partes* Review are eligible for paper filings, and only if authorized by the PTAB. The USPTO expects that approximately 99 percent of the responses to those two items will be submitted electronically. Of the remaining 1 percent, the vast majority—98 percent—will be submitted by mail, for a total of 74 mailed submissions. The average first class USPS postage cost for a one-pound mailed submission in a flat rate envelope is $5.75. Therefore, the USPTO estimates that the postage costs for the mailed submissions in this collection will total $425.50.

The USPTO estimates that the total annual (non-hour) cost burden for this collection, in the form of filing fees ($60,404,000.00) and postage costs ($425.50), is $60,404,425.50 per year.

IV. Request for Comments

Comments are invited on:

(a) Whether the proposed collection of information is necessary for the proper performance of the functions of the agency, including whether the information shall have practical utility;

(b) the accuracy of the agency's estimate of the burden (including hours and cost) of the proposed collection of information, including the validity of the methodology and assumptions used;

(c) ways to enhance the quality, utility, and clarity of the information to be collected; and

(d) ways to minimize the burden of the collection of information on respondents, including through the use of automated collection techniques or other forms of information technology, *e.g.,* permitting electronic submission of responses.

Comments submitted in response to this notice will be summarized or included in the request for OMB approval of this information collection; they will also become a matter of public record.

Dated: June 1, 2015.

Marcie Lovett,

Records Management Division Director, USPTO, Office of the Chief Information Officer.

[FR Doc. 2015–14094 Filed 6–8–15; 8:45 am]

BILLING CODE 3510–16–P

DEPARTMENT OF DEFENSE

Office of the Secretary

National Commission on the Future of the Army; Notice of Federal Advisory Committee Meeting

AGENCY: Department of Defense (DoD), Deputy Chief Management Officer.

ACTION: Notice of Federal Advisory Committee Meeting.

SUMMARY: The DoD is publishing this notice to announce two days of meetings of the National Commission on the Future of the Army (''the Commission''). The meetings will be partially closed to the public.

DATES: Date of the Closed Meetings: Wednesday, June 17, 2015, from 1:00 p.m. to 6:45 p.m. Date of the Open Meeting: Thursday, June 18, 2015, from 8:30 a.m. to 12:50 p.m.

ADDRESSES: Address of Closed Meeting, June 17: Rm 5133, Zachary Taylor Building, 2530 Crystal Dr., Arlington, VA 22202.

Address of Open Meeting, June 18: Polk Conference Room, Room 12158, James Polk Building 2521 S. Clark St., Arlington, VA 22202.

FOR FURTHER INFORMATION CONTACT: Mr. Don Tison, Designated Federal Officer, National Commission on the Future of the Army, 700 Army Pentagon, Room 3E406, Washington, DC 20310–0700, Email: *dfo.public@ncfa.ncr.gov* Desk (703) 692–9099. Facsimile (703) 697–8242.

SUPPLEMENTARY INFORMATION: Due to circumstances beyond the control of the Designated Federal Officer and the Department of Defense, the National Commission on the Future of the Army was unable to provide public notification of its meeting of June 17–18, 2015, as required by 41 CFR 102–3.150(a). Accordingly, the Advisory Committee Management Officer for the Department of Defense, pursuant to 41 CFR 102–3.150(b), waives the 15-calendar day notification requirement. This meeting will be held under the provisions of the Federal Advisory Committee Act (FACA) of 1972 (5 U.S.C., Appendix, as amended), the Government in the Sunshine Act of 1976 (5 U.S.C. 552b, as amended), and 41 CFR 102–3.150.

Purpose of Meetings

During the closed meeting on Wednesday, June 17, 2015, the Commission will hear classified testimony from individual witnesses and engage in discussion on Meeting War Plans and Defense Scenario Demands for Strategic Transport and Mobility, Threats to the Homeland, and Homeland Threat Responses.

During the open meeting on Thursday, June 18, 2015, the Commission will hear comments from several organizations, the Public will have the opportunity to provide verbal comments, and immediately afterwards the Commission will discuss topics raised during the organizational and public comment session.

Agendas

June 17, 2015—Closed Hearing: The Commission will hear comments from various Government organizations at the closed hearing on June 17, 2015, and the organizations have been asked to address: Meeting force requirements from the Defense Planning Guidance; guidance for employment of the Force; global force integration matrix; combatant command integrated priorities lists; operational plans and contingency plans; studies, analysis, assessments, and evaluations of plans, programs, and strategies for strategic mobility of Army forces from all three components; current threats to the homeland; regular and reserve components of the Army support current and anticipated homeland defense and disaster assistance missions in the United States; and Current and projected readiness (training levels, equipment status, and manning levels).

Speakers include, but are not limited to, representatives from these Government organizations: United States Transportation Command, Office of the Secretary of Defense's Cost Assessment and Program Evaluation Office (CAPE), the Federal Bureau of Investigation's National Counterterrorism Center, US Northern Command, Fifth U.S. Army, the Deputy Assistant Secretary of Homeland Defense Integration and Defense Support to Civil Authorities, and the Director, Army National Guard. All presentations and resulting discussion are classified.

June 18, 2015—Open Hearing: The Commission will hear verbal comments from Military Associations, not to exceed thirty minutes, and Public, not to exceed five minutes and immediately afterwards the Commission will discuss topics raised during the Organizational and public comments session.

Meeting Accessibility

In accordance with applicable law, 5 U.S.C. 552b(c), and 41 CFR 102–3.155, the DoD has determined that the portion of the meeting scheduled for Wednesday, June 17, 2015, from 1:00 p.m. to 6:45 p.m. will be closed to the public. Specifically, the Assistant Deputy Chief Management Officer, with the coordination of the DoD FACA Attorney, has determined in writing that this portion of the meeting will be closed to the public because it will discuss matters covered by 5 U.S.C. 552b(c)(1).

Pursuant to 41 CFR 102–3.140 through 102–3.165 and the availability of space, the meeting scheduled for June 18, 2015 from 8:30 a.m. to 12:50 p.m.at the James Polk Building is open to the public. Seating is limited and pre-registration is strongly encouraged. Media representatives are also encouraged to register. Members of the media must comply with the rules of photography and video filming in the James Polk Building. The closest public parking facility is located in the basement and along the streets. Visitors will be required to present one form of photograph identification. Visitors to the James Polk Office Building will be screened by a magnetometer, and all items that are permitted inside the building will be screened by an x-ray device. Visitors should keep their belongings with them at all times. The following items are strictly prohibited in the James Polk Office Building: Any pointed object, *e.g.,* knitting needles and letter openers (pens and pencils are permitted.); any bag larger than 18″ wide x 14″ high x 8.5″ deep; electric stun guns, martial arts weapons or devices; guns, replica guns, ammunition and fireworks; knives of any size; mace and pepper spray; razors and box cutters.

Written Comments

Pursuant to section 10(a)(3) of the FACA and 41 CFR 102–3.105(j) and 102–3.140, the public or interested organizations may submit written comments to the Commission in response to the stated agenda of the open and/or closed meeting or the Commission's mission. The Designated Federal Officer (DFO) will review all submitted written statements. Written

comments should be submitted to Mr. Donald Tison, DFO, via facsimile or electronic mail, the preferred modes of submission. Each page of the comment must include the author's name, title or affiliation, address, and daytime phone number. All comments received before Wednesday, June 10, 2015, will be provided to the Commission before the June 18, 2015, meeting. Comments received after Wednesday, June 10, 2015, will be provided to the Commission before its next meeting. All contact information may be found in the **FOR FURTHER INFORMATION CONTACT** section.

Oral Comments

In addition to written statements, twenty minutes will be reserved for individuals or interest groups to address the Commission on June 18, 2015. Those interested in presenting oral comments to the Commission must summarize their oral statement in writing and submit with their registration. The Commission's staff will assign time to oral commenters at the meeting; no more than five minutes each for individuals. While requests to make an oral presentation to the Commission will be honored on a first come, first served basis, other opportunities for oral comments will be provided at future meetings.

Registration

Individuals and entities who wish to attend the public hearing and meeting on Thursday, June 18, 2015 are encouraged to register for the event with the DFO using the electronic mail and facsimile contact information found in the **FOR FURTHER INFORMATION CONTACT** section. The communication should include the registrant's full name, title, affiliation or employer, email address, day time phone number. This information will assist the Commission in contacting individuals should it decide to do so at a later date. If applicable, include written comments and a request to speak during the oral comment session. (Oral comment requests must be accompanied by a summary of your presentation.) Registrations and written comments should be typed.

Additional Information

The DoD sponsor for the Commission is the Deputy Chief Management Officer. The Commission is tasked to submit a report, containing a comprehensive study and recommendations, by February 1, 2016 to the President of the United States and the Congressional defense committees. The report will contain a detailed statement of the findings and conclusions of the Commission, together with its recommendations for such legislation and administrative actions it may consider appropriate in light of the results of the study. The comprehensive study of the structure of the Army will determine whether, and how, the structure should be modified to best fulfill current and anticipated mission requirements for the Army in a manner consistent with available resources.

Dated: June 4, 2015.

Aaron Siegel,

Alternate OSD Federal Register Liaison Officer, Department of Defense.

[FR Doc. 2015–14029 Filed 6–8–15; 8:45 am]

BILLING CODE 5001–06–P

DEPARTMENT OF DEFENSE

Office of the Secretary

Defense Policy Board; Notice of Federal Advisory Committee Meeting

AGENCY: Department of Defense, Office of the Under Secretary of Defense (Policy).

ACTION: Federal advisory committee meeting notice.

SUMMARY: The Department of Defense (DoD) is publishing this notice to announce the following Federal advisory committee meeting of the Defense Policy Board (DPB). This meeting will be closed to the public.

DATES: *Quarterly Meeting:* Tuesday June 30, 2015, from 8:30 a.m. to 5:00 p.m. and Wednesday, July 1, 2015, from 8:00 a.m. to 11:00 a.m.

ADDRESSES: The Pentagon, 2000 Defense Pentagon, Washington, DC 20301–2000.

FOR FURTHER INFORMATION CONTACT: Ms. Ann Hansen, 2000 Defense Pentagon, Washington, DC 20301–2000. Phone: (703) 571–9232.

SUPPLEMENTARY INFORMATION: This meeting is being held under the provisions of the Federal Advisory Committee Act (FACA) of 1972 (5 U.S.C., Appendix, as amended), the Government in the Sunshine Act of 1976 (5 U.S.C. 552b, as amended) (''the Sunshine Act''), and the Federal Advisory Committee Management Act; Final Rule 41 CFR parts 101–6 and 102–3 (''the FACA Final Rule'').

Purpose of Meeting

To obtain, review and evaluate classified information related to the DPB's mission to advise on: (a) Issues central to strategic DoD planning; (b) policy implications of U.S. force structure and force modernization and on DoD's ability to execute U.S. defense strategy; (c) U.S. regional defense policies; and (d) other research and analysis of topics raised by the Secretary of Defense, the Deputy Secretary or the Under Secretary of Defense for Policy.

Meeting Agenda

Beginning at 8:30 a.m. on June 30 through the end of the meeting on July 1, the DPB will have secret through top secret (SCI) level discussions on national security issues regarding Russia regional implications.

Meeting Accessibility

Pursuant to the Sunshine Act and the FACA Final Rule, the Department of Defense has determined that this meeting shall be closed to the public. The Under Secretary of Defense (Policy), in consultation with the Department of Defense FACA Attorney, has determined in writing that this meeting be closed to the public because the discussions fall under the purview of Section 552b(c)(1) of the Sunshine Act and are so inextricably intertwined with unclassified material that they cannot reasonably be segregated into separate discussions without disclosing secret or higher classified material.

Committee's Designated Federal Officer or Point of Contact

Ann Hansen, *osd.pentagon.ousd-policy.mbx.defense-board@mail.mil.*

Written Statements

Pursuant to 41 CFR § § 102–3.105(j) and 102–3.140(c) and section 10(a)(3) of the FACA, the public or interested organizations may submit written statements to the membership of the DPB at any time regarding its mission or in response to the stated agenda of a planned meeting. Written statements should be submitted to the DPB's Designated Federal Officer (DFO); the DFO's contact information is listed in this notice or it can be obtained from the GSA's FACA Database—*http://www.facadatabase.gov/.*

Written statements that do not pertain to a scheduled meeting of the DPB may be submitted at any time. However, if individual comments pertain to a specific topic being discussed at a planned meeting, then these statements must be submitted no later than five business days prior to the meeting in question. The DFO will review all submitted written statements and provide copies to all committee members.

Dated: June 4, 2015.

Aaron Siegel,

Alternate OSD Federal Register Liaison Officer, Department of Defense.

[FR Doc. 2015–14070 Filed 6–8–15; 8:45 am]

BILLING CODE 5001–06–P

DEPARTMENT OF EDUCATION

Applications for New Awards; Skills for Success Program

AGENCY: Office of Innovation and Improvement, Department of Education

ACTION: Notice.

Overview Information: Skills for Success Program.

Notice inviting applications for new awards for fiscal year (FY) 2015.

Catalog of Federal Domestic Assistance (CFDA) Number: 84.215H.

DATES:

Applications Available: June 11, 2015.

Deadline for Notice of Intent To Apply: June 29, 2015.

Date of Informational Meeting: June 24, 2015.

Deadline for Transmittal of Applications: July 29, 2015.

Deadline for Intergovernmental Review: September 28, 2015.

Full Text of Announcement

I. Funding Opportunity Description

Purpose of Program: The Skills for Success Program supports Local Educational Agencies [1] (LEAs) and their partners in implementing, evaluating, and refining tools and approaches for developing the non-cognitive skills of middle-grades students in order to increase student success. Grants provide funding for the implementation, evaluation, and refinement of existing tools and approaches (*e.g.,* digital games, growth mindset classroom activities, experiential learning opportunities) that integrate the development of students' non-cognitive skills into classroom-level activities and existing strategies designed to improve schools. As grantees implement their projects, we expect them to collect, analyze, and use data to improve their tools and strategies throughout the project period. Ultimately, we expect grantees to identify and validate scalable tools and approaches that can be used by educators of high-need middle-grades students across the country. In addition, we expect that these grants will help build the capacity of LEAs and their partners to conduct research and apply that research to school- and district-level practices. This program also encourages sustainable partnerships that can continue the use of effective tools and approaches beyond the grant period.

Background: An emerging body of research indicates that interventions that focus on enhancing student attributes, such as growth mindsets, resilience, self-control, and other social and behavioral skills, such as self-efficacy, can have a significant and lasting impact on student achievement and behavior. This research suggests that non-cognitive factors may play an important role in students' academic, career, and life outcomes.[2] For example, teaching students that their minds can grow and develop through routine and focused practice, as compared to referring to intelligence as a fixed trait like eye color, can increase students' academic success.[3] This competition is designed to build on that research by expanding our knowledge and understanding about the tools and approaches for promoting non-cognitive skills or how educators can improve their students' non-cognitive skills as part of their broader efforts to enhance student educational outcomes, including efforts to improve academic achievement and attendance and reduce chronic absenteeism and exclusionary discipline.

For the FY 2015 competition, this program focuses on projects that implement, evaluate, and refine existing tools and approaches that are designed to improve students' non-cognitive skills during the middle grades. We consider the middle grades (grades 5–8) to be a particularly critical time in students' academic trajectories, especially in the context of increased expectations for what students should know and be able to do in order to be adequately prepared for college and career opportunities. Moreover, recent research demonstrates that educators of students in middle grades may be able to encourage non-cognitive skills development to improve student academic and behavioral outcomes.[4]

This competition supports projects that improve upon existing tools and approaches for enhancing students' non-cognitive skills by implementing these tools and approaches and collecting and using data, as well as leveraging other analytical methods, throughout the project. Through these grants, and LEAs' partnerships with nonprofit organizations, Institutions of Higher Education (IHEs), other LEAs, or some combination thereof, we expect to build LEAs' long-term capacity to implement, evaluate, and improve strategies that enhance students' non-cognitive skills. These partnerships could support capacity building by bringing additional resources and expertise to the implementation and evaluation of these tools and approaches. Strong partnerships could also help LEAs continue their work to develop students' non-cognitive skills beyond the grant period. By identifying and strengthening tools and approaches that enhance students' non-cognitive skills, LEAs are also expected to expand the impact of their projects by sharing their emerging practices with other LEAs or schools. Partnerships with nonprofit organizations and IHEs may also aid these dissemination efforts.

We include two absolute priorities in the FY 2015 competition. Applicants must address both absolute priorities.

The first absolute priority requires applicants to design projects that build upon existing tools and approaches that encourage middle-grades students to develop their non-cognitive skills. These projects are expected to improve student outcomes and behaviors; enhance the tools and approaches being utilized to enrich students' non-cognitive skills and behaviors through iterative analyses and improvements; and build knowledge from which other LEAs and schools can benefit. As efforts and investments in the non-cognitive area grow, we think it is important to identify potentially scalable strategies and models for students in the middle grades, and to build the evidence base supporting these approaches in order to determine how educators can effectively help students develop such skills and behaviors. These approaches might include, for example, implementing educator-led interventions for both individual students and groups of students (that are carried out directly with students), fostering changes in educators' instructional practices, or redesigning learning environments. Additionally, we ask applicants to

[1] Defined terms are noted throughout this document with initial capitals.

[2] The University of Chicago Consortium of Chicago School Research (June 2012). *Teaching Adolescents to Become Learners: The Role of Non-cognitive Factors in Shaping School Performance.* Available at: *https://ccsr.uchicago.edu/sites/default/files/publications/Noncognitive%20Report.pdf.*

[3] Blackwell, L.A., Trzesniewski, K.H., & Dweck, C.S. (2007). Implicit Theories of intelligence and achievement across the junior high school transition: A longitudinal study and an intervention. *Child Development,* 78, 246–263. *Available at: mtoliveboe.org/cmsAdmin/uploads/blackwell-theories-of-intelligence-child-dev-2007.pdf.*

[4] Yeager, David S., and Gregory M. Walton (April 2011). Social-Psychological Interventions in Education: They're Not Magic. Available at: *https://web.stanford.edu/~gwalton/home/Research_files/YeagerWalton2011.pdf.*

ensure that their proposed approach fits into existing school- or district-level strategies to improve students' learning outcomes.

We also include a priority that requires applicants to design projects that improve academic outcomes or learning environments for High-need Students. Persistent and significant gaps exist between High-need Students and their more advantaged peers, and this competition seeks to expand approaches that help ensure that all students succeed academically and learn essential life skills that support their success in college and their career.

Priorities: This competition includes two absolute priorities. We are establishing Absolute Priority 1 for the FY 2015 Skills for Success competition and any subsequent year in which we make awards from the list of unfunded applicants from this competition, in accordance with section 437(d)(1) of the General Education Provisions Act (GEPA), 20 U.S.C. 1232(d)(1). Absolute Priority 2 is from the Department's notice of final supplemental priorities and definitions (Supplemental Priorities), published in the **Federal Register** on December 10, 2014 (79 FR 73425).

Absolute Priorities: These priorities are absolute priorities. Under 34 CFR 75.105(c)(3) we consider only applications that meet these priorities.

These priorities are:

Absolute Priority 1—Developing Non-Cognitive Skills in Middle-Grades Students

Under this priority we provide funding to projects that implement, refine, and evaluate existing tools and approaches that encourage the development of non-cognitive skills for students in grades 5–8. Such tools and approaches may be designed to encourage the development of growth mindsets, resilience, and self-control, among other attributes. Applicants must demonstrate how their proposed approach would develop students' non-cognitive skills and fit into existing school- or district-level improvement strategies. Projects will share their learnings with other LEAs.

Absolute Priority 2—Supporting High-Need Students

Under this priority we provide funding to projects that are designed to improve academic outcomes, learning environments, or both, for High-need Students.

Definitions: The following definitions are from 34 CFR 77.1, the Supplemental Priorities, and section 9101 of the Elementary and Secondary Education Act of 1965, as amended (ESEA) (20 U.S.C. 7801), and apply to the priorities and selection criteria in this notice. The source of each definition is noted in parentheses following the text of the definition.

High-minority school means a school as that term is defined by an LEA, which must define the term in a manner consistent with its State's Teacher Equity Plan, as required by section 1111(b)(8)(C) of the ESEA. The applicant must provide the definition(s) of High-minority Schools used in its application. (Supplemental Priorities)

High-need students means students who are at risk of educational failure or otherwise in need of special assistance and support, such as students who are living in poverty, who attend High-minority Schools, who are far below grade level, who have left school before receiving a Regular High School Diploma, who are at risk of not graduating with a diploma on time, who are homeless, who are in foster care, who have been incarcerated, who have disabilities, or who are English learners. (Supplemental Priorities)

Local educational agency means (a) In general—a public board of education or other public authority legally constituted within a State for either administrative control or direction of, or to perform a service function for, public elementary schools or secondary schools in a city, county, township, school district, or other political subdivision of a State, or of or for a combination of school districts or counties that is recognized in a State as an administrative agency for its public elementary schools or secondary schools.

(b) Administrative control and direction—The term includes any other public institution or agency having administrative control and direction of a public elementary school or secondary school.

(c) BIA schools—The term includes an elementary school or secondary school funded by the Bureau of Indian Affairs but only to the extent that including the school makes the school eligible for programs for which specific eligibility is not provided to the school in another provision of law and the school does not have a student population that is smaller than the student population of the local educational agency receiving assistance under this Act with the smallest student population, except that the school shall not be subject to the jurisdiction of any State educational agency other than the Bureau of Indian Affairs.

(d) Educational service agencies—The term includes educational service agencies and consortia of those agencies.

(e) State educational agency—The term includes the State educational agency in a State in which the State educational agency is the sole educational agency for all public schools. (ESEA)

Logic model (also referred to as theory of action) means a well-specified conceptual framework that identifies key components of the proposed process, product, strategy, or practice (*i.e.,* the active ''ingredients'' that are hypothesized to be critical to achieving the relevant outcomes) and describes the relationships among the key components and outcomes, theoretically and operationally. (34 CFR 77.1)

Nonprofit, as applied to an agency, organization, or institution, means that it is owned and operated by one or more corporations or associations whose net earnings do not benefit, and cannot lawfully benefit, any private shareholder or entity. (34 CFR 77.1)

Quasi-experimental design study means a study using a design that attempts to approximate an experimental design by identifying a comparison group that is similar to the treatment group in important respects. These studies, depending on design and implementation, can meet What Works Clearinghouse Evidence Standards with reservations (but not What Works Clearinghouse Evidence Standards without reservations). (34 CFR 77.1)

Randomized controlled trial means a study that employs random assignment of, for example, students, teachers, classrooms, schools, or districts to receive the intervention being evaluated (the treatment group) or not to receive the intervention (the control group). The estimated effectiveness of the intervention is the difference between the average outcomes for the treatment group and for the control group. These studies, depending on design and implementation, can meet What Works Clearinghouse Evidence Standards without reservations. (34 CFR 77.1)

Regular high school diploma means the standard high school diploma that is awarded to students in the State and that is fully aligned with the State's academic content standards or a higher diploma and does not include a General Education Development credential, certificate of attendance, or any alternative award. (Supplemental Priorities)

Relevant outcome means the student outcome(s) (or the ultimate outcome if not related to students) the proposed process, product, strategy, or practice is designed to improve; consistent with

the specific goals of a program. (34 CFR 77.1)

Strong theory means a rationale for the proposed process, product, strategy, or practice that includes a Logic Model. (34 CFR 77.1)

What Works Clearinghouse Evidence Standards means the standards set forth in the What Works Clearinghouse Procedures and Standards Handbook (Version 3.0, March 2014), which can be found at the following link: *http://ies.ed.gov/ncee/wwc/DocumentSum.aspx?sid=19.* (34 CFR 77.1)

Waiver of Proposed Rulemaking: Under the Administrative Procedure Act (5 U.S.C. 553), the Department generally offers interested parties the opportunity to comment on proposed priorities and requirements. Section 437(d)(1) of GEPA, however, allows the Secretary to exempt from rulemaking requirements, regulations governing the first grant competition under a new or substantially revised program authority. This is the first grant competition for this program under 20 U.S.C. 7243–7243c and therefore qualifies for this exemption. In order to ensure timely grant awards, the Secretary has decided to forego public comment on Absolute Priority 1 and the Eligible Applicants requirement under section 437(d)(1) of GEPA. This priority and this requirement will apply to the FY 2015 grant competition and any subsequent year in which we make awards from the list of unfunded applications for this competition.

Program Authority: 20 U.S.C. 7243–7243c.

Applicable Regulations: (a) The Education Department General Administrative Regulations (EDGAR) in 34 CFR parts 75, 76, 77, 79, 81, 82, 84, 86, 97, 98, and 99. (b) The Office of Management and Budget Guidelines to Agencies on Governmentwide Debarment and Suspension (Nonprocurement) in 2 CFR part 180, as adopted and amended as regulations of the Department in 2 CFR part 3485. (c) The Uniform Administrative Requirements, Cost Principles, and Audit Requirements for Federal Awards in 2 CFR part 200, as adopted and amended in 2 CFR part 3474. (d) The Supplemental Priorities (79 FR 73425).

Note: The regulations in 34 CFR part 86 apply to IHEs only.

II. Award Information

Type of Award: Discretionary grants.

Estimated Available Funds: $2,000,000.

Contingent upon the availability of funds and the quality of applications, we may make additional awards in FY 2016 or later years from the list of unfunded applicants from this competition.

Estimated Range of Awards: $400,000–600,000 per year.

Estimated Average Size of Awards: $500,000 per year.

Funding for the second and third years is subject to the availability of funds and the approval of continuation awards (see 34 CFR 75.253).

Estimated Number of Awards: 4–5.

Note: The Department is not bound by any estimates in this notice.

Project Period: 12–36 months.

III. Eligibility Information

1. *Eligible Applicants:* The following entities are eligible to apply for Skills for Success grants:

(a) An LEA.

(b) An LEA in partnership with—

(1) A nonprofit;

(2) An IHE; or

(3) Other LEAs.

2. *Cost Sharing or Matching:* This program does not require cost sharing or matching.

IV. Application and Submission Information

1. *Address to Request Application Package:* You can obtain an application package via the Internet or from the Education Publications Center (ED Pubs). To obtain a copy via the Internet, use the following address: *www2.ed.gov/programs/skillssuccess/index.html.* To obtain a copy from ED Pubs, write, fax, or call the following: ED Pubs, U.S. Department of Education, P.O. Box 22207, Alexandria, VA 22304. Telephone, toll free: 1–877–433–7827. FAX: (703) 605–6794.

If you use a telecommunications device for the deaf (TDD) or a text telephone (TTY), call, toll free: 1–877–576–7734.

You can contact ED Pubs at its Web site, also: *www.EDPubs.gov* or at its email address: *edpubs@inet.ed.gov.*

If you request an application package from ED Pubs, be sure to identify this program or competition as follows: CFDA number 84.215H.

Individuals with disabilities can obtain a copy of the application package in an accessible format (*e.g.,* braille, large print, audiotape, or compact disc) by contacting the person listed under *Accessible Format* in section VIII of this notice.

2. a. *Content and Form of Application Submission:* Requirements concerning the content of an application, together with the forms you must submit, are in the application package for this competition.

Deadline for Notice of Intent to Apply: June 29, 2015.

We will be able to develop a more efficient process for reviewing grant applications if we know the approximate number of applicants that intend to apply for funding under this competition. Therefore, the Secretary strongly encourages each potential applicant to notify us of the applicant's intent to submit an application by completing a Web-based form. Applicants may access this form online at *https://www.surveymonkey.com/r/VB5L3BR.* Applicants that do not complete this form may still submit an application. Page Limit: The application narrative (Part III of the application) is where you, the applicant, address the selection criteria that reviewers use to evaluate your application. Applicants submitting an application should limit the application narrative to no more than 25 pages. Applicants also are strongly encouraged not to include lengthy appendices for the application that contain information that they were unable to include in the narrative. Applicants should use the following standards:

- A ''page'' is 8.5″ x 11″, on one side only, with 1″ margins at the top, bottom, and both sides.
- Double space (no more than three lines per vertical inch) all text in the application narrative, including titles, headings, footnotes, quotations, references, and captions.
- Use a font that is either 12 point or larger or no smaller than 10 pitch (characters per inch).
- Use one of the following fonts: Times New Roman, Courier, Courier New, or Arial.

The page limit for the application does not apply to Part I, the cover sheet; Part II, the budget section, including the narrative budget justification; Part IV, the assurances and certifications; or the one-page abstract, the resumes, the bibliography, or the letters of support for the application.

b. *Submission of Proprietary Information:*

Given the types of projects that may be proposed in applications for the Skills for Success Program, some applications may include business information that applicants consider proprietary. The Department's regulations define ''business information'' in 34 CFR 5.11.

We plan on posting the application narrative section of funded Skills for Success applications on the Department's Web site, so you may wish to request confidentiality of business information. Identifying proprietary information in the submitted

application will help facilitate this public disclosure process.

Consistent with Executive Order 12600, please designate in your application any information that you feel is exempt from disclosure under Exemption 4 of the Freedom of Information Act. In the appropriate Appendix section of your application, under ''Other Attachments Form,'' please list the page number or numbers on which we can find this information. For additional information please see 34 CFR 5.11(c).

3. *Submission Dates and Times:*

Applications Available: June 11, 2015.

Deadline for Notice of Intent to Apply: June 29, 2015.

Date of Informational Meeting: We intend to hold a Webinar to provide technical assistance to interested applicants on June 24, 2015. You may obtain detailed information regarding this meeting on the Skills for Success Web site at *www2.ed.gov/programs/skillssuccess/index.html.*

Deadline for Transmittal of Applications: July 29, 2015.

Applications for grants under this competition must be submitted electronically using the Grants.gov Apply site (Grants.gov). For information (including dates and times) about how to submit your application electronically, or in paper format by mail or hand delivery if you qualify for an exception to the electronic submission requirement, please refer to section IV. 7. *Other Submission Requirements* of this notice.

We do not consider an application that does not comply with the deadline requirements.

Individuals with disabilities who need an accommodation or auxiliary aid in connection with the application process should contact the person listed under **FOR FURTHER INFORMATION CONTACT** in section VII of this notice. If the Department provides an accommodation or auxiliary aid to an individual with a disability in connection with the application process, the individual's application remains subject to all other requirements and limitations in this notice.

Deadline for Intergovernmental Review: September 28, 2015.

4. *Intergovernmental Review:* This competition is subject to Executive Order 12372 and the regulations in 34 CFR part 79. Information about Intergovernmental Review of Federal Programs under Executive Order 12372 is in the application package for this competition.

5. *Funding Restrictions:* We reference regulations outlining funding restrictions in the *Applicable Regulations* section of this notice.

6. *Data Universal Numbering System Number, Taxpayer Identification Number, and System for Award Management:* To do business with the Department of Education, you must—

a. Have a Data Universal Numbering System (DUNS) number and a Taxpayer Identification Number (TIN);

b. Register both your DUNS number and TIN with the System for Award Management (SAM) (formerly the Central Contractor Registry (CCR)), the Government's primary registrant database;

c. Provide your DUNS number and TIN on your application; and

d. Maintain an active SAM registration with current information while your application is under review by the Department and, if you are awarded a grant, during the project period.

You can obtain a DUNS number from Dun and Bradstreet. A DUNS number can be created within one to two business days.

If you are a corporate entity, agency, institution, or organization, you can obtain a TIN from the Internal Revenue Service. If you are an individual, you can obtain a TIN from the Internal Revenue Service or the Social Security Administration. If you need a new TIN, please allow two to five weeks for your TIN to become active.

The SAM registration process can take approximately seven business days, but may take upwards of several weeks, depending on the completeness and accuracy of the data entered into the SAM database by an entity. Thus, if you think you might want to apply for Federal financial assistance under a program administered by the Department, please allow sufficient time to obtain and register your DUNS number and TIN. We strongly recommend that you register early.

Note: Once your SAM registration is active, you will need to allow 24 to 48 hours for the information to be available in Grants.gov and before you can submit an application through Grants.gov.

If you are currently registered with SAM, you may not need to make any changes. However, please make certain that the TIN associated with your DUNS number is correct. Also note that you will need to update your registration annually. This may take three or more business days.

Information about SAM is available at *www.SAM.gov.* To further assist you with obtaining and registering your DUNS number and TIN in SAM or updating your existing SAM account, we have prepared a SAM.gov Tip Sheet, which you can find at: *www2.ed.gov/fund/grant/apply/sam-faqs.html.*

In addition, if you are submitting your application via Grants.gov, you must (1) be designated by your organization as an Authorized Organization Representative (AOR); and (2) register yourself with Grants.gov as an AOR. Details on these steps are outlined at the following Grants.gov Web page: *www.grants.gov/web/grants/register.html.*

7. *Other Submission Requirements:* Applications for grants for the Skills for Success Program must be submitted electronically unless you qualify for an exception to this requirement in accordance with the instructions in this section.

a. *Electronic Submission of Applications.*

Applications for Skills for Success grants, CFDA number 84.215H, must be submitted electronically using the Governmentwide Grants.gov Apply site at *www.Grants.gov.* Through this site, you will be able to download a copy of the application package, complete it offline, and then upload and submit your application. You may not email an electronic copy of a grant application to us.

We will reject your application if you submit it in paper format unless, as described elsewhere in this section, you qualify for one of the exceptions to the electronic submission requirement *and* submit, no later than two weeks before the application deadline date, a written statement to the Department that you qualify for one of these exceptions. Further information regarding calculation of the date that is two weeks before the application deadline date is provided later in this section under *Exception to Electronic Submission Requirement.*

You may access the electronic grant application for the Skills for Success Program at *www.Grants.gov.* You must search for the downloadable application package for this competition by the CFDA number. Do not include the CFDA number's alpha suffix in your search (*e.g.,* search for 84.215, not 84.215H).

Please note the following:

- When you enter the Grants.gov site, you will find information about submitting an application electronically through the site, as well as the hours of operation.
- Applications received by Grants.gov are date and time stamped. Your application must be fully uploaded and submitted and must be date and time stamped by the Grants.gov system no later than 4:30:00 p.m., Washington, DC time, on the application deadline date.

Except as otherwise noted in this section, we will not accept your application if it is received—that is, date and time stamped by the Grants.gov system—after 4:30:00 p.m., Washington, DC time, on the application deadline date. We do not consider an application that does not comply with the deadline requirements. When we retrieve your application from Grants.gov, we will notify you if we are rejecting your application because it was date and time stamped by the Grants.gov system after 4:30:00 p.m., Washington, DC time, on the application deadline date.

• The amount of time it can take to upload an application will vary depending on a variety of factors, including the size of the application and the speed of your Internet connection. Therefore, we strongly recommend that you do not wait until the application deadline date to begin the submission process through Grants.gov.

• You should review and follow the Education Submission Procedures for submitting an application through Grants.gov that are included in the application package for this competition to ensure that you submit your application in a timely manner to the Grants.gov system. You can also find the Education Submission Procedures pertaining to Grants.gov under News and Events on the Department's G5 system home page at *www.G5.gov.*

• You will not receive additional point value because you submit your application in electronic format, nor will we penalize you if you qualify for an exception to the electronic submission requirement, as described elsewhere in this section, and submit your application in paper format.

• You must submit all documents electronically, including all information you typically provide on the following forms: The Application for Federal Assistance (SF 424), the Department of Education Supplemental Information for SF 424, Budget Information—Non-Construction Programs (ED 524), and all necessary assurances and certifications.

• You must upload any narrative sections and all other attachments to your application as files in a PDF (Portable Document) read-only, non-modifiable format. Do not upload an interactive or fillable PDF file. If you upload a file type other than a read-only, non-modifiable PDF or submit a password-protected file, we will not review that material.

• Your electronic application must comply with any page-limit requirements described in this notice.

• After you electronically submit your application, you will receive from Grants.gov an automatic notification of receipt that contains a Grants.gov tracking number. (This notification indicates receipt by Grants.gov only, not receipt by the Department.) The Department then will retrieve your application from Grants.gov and send a second notification to you by email. This second notification indicates that the Department has received your application and has assigned your application a PR/Award number (an ED-specified identifying number unique to your application).

• We may request that you provide us original signatures on forms at a later date.

Application Deadline Date Extension in Case of Technical Issues with the Grants.gov System: If you are experiencing problems submitting your application through Grants.gov, please contact the Grants.gov Support Desk, toll free, at 1–800–518–4726. You must obtain a Grants.gov Support Desk Case Number and must keep a record of it.

If you are prevented from electronically submitting your application on the application deadline date because of technical problems with the Grants.gov system, we will grant you an extension until 4:30:00 p.m., Washington, DC time, the following business day to enable you to transmit your application electronically or by hand delivery. You also may mail your application by following the mailing instructions described elsewhere in this notice.

If you submit an application after 4:30:00 p.m., Washington, DC time, on the application deadline date, please contact the person listed under **FOR FURTHER INFORMATION CONTACT** in section VII of this notice and provide an explanation of the technical problem you experienced with Grants.gov, along with the Grants.gov Support Desk Case Number. We will accept your application if we can confirm that a technical problem occurred with the Grants.gov system and that that problem affected your ability to submit your application by 4:30:00 p.m., Washington, DC time, on the application deadline date. The Department will contact you after a determination is made on whether your application will be accepted.

Note: The extensions to which we refer in this section apply only to the unavailability of, or technical problems with, the Grants.gov system. We will not grant you an extension if you failed to fully register to submit your application to Grants.gov before the application deadline date and time or if the technical problem you experienced is unrelated to the Grants.gov system.

Exception to Electronic Submission Requirement: You qualify for an exception to the electronic submission requirement, and may submit your application in paper format, if you are unable to submit an application through the Grants.gov system because—

• You do not have access to the Internet; or

• You do not have the capacity to upload large documents to the Grants.gov system; *and*

• No later than two weeks before the application deadline date (14 calendar days or, if the fourteenth calendar day before the application deadline date falls on a Federal holiday, the next business day following the Federal holiday), you mail or fax a written statement to the Department, explaining which of the two grounds for an exception prevents you from using the Internet to submit your application.

If you mail your written statement to the Department, it must be postmarked no later than two weeks before the application deadline date. If you fax your written statement to the Department, we must receive the faxed statement no later than two weeks before the application deadline date.

Address and mail or fax your statement to: Kelly Terpak, U.S. Department of Education, 400 Maryland Avenue SW., Room 4C107, Washington, DC 20202–5930. FAX: (202) 205–5631.

Your paper application must be submitted in accordance with the mail or hand delivery instructions described in this notice.

b. *Submission of Paper Applications by Mail.*

If you qualify for an exception to the electronic submission requirement, you may mail (through the U.S. Postal Service or a commercial carrier) your application to the Department. You must mail the original and two copies of your application, on or before the application deadline date, to the Department at the following address:

U.S. Department of Education, Application Control Center, Attention: (CFDA Number 84.215H), LBJ Basement Level 1, 400 Maryland Avenue SW., Washington, DC 20202–4260

You must show proof of mailing consisting of one of the following:

(1) A legibly dated U.S. Postal Service postmark.

(2) A legible mail receipt with the date of mailing stamped by the U.S. Postal Service.

(3) A dated shipping label, invoice, or receipt from a commercial carrier.

(4) Any other proof of mailing acceptable to the Secretary of the U.S. Department of Education.

If you mail your application through the U.S. Postal Service, we do not

accept either of the following as proof of mailing:

(1) A private metered postmark.

(2) A mail receipt that is not dated by the U.S. Postal Service.

If your application is postmarked after the application deadline date, we will not consider your application.

Note: The U.S. Postal Service does not uniformly provide a dated postmark. Before relying on this method, you should check with your local post office.

c. *Submission of Paper Applications by Hand Delivery.*

If you qualify for an exception to the electronic submission requirement, you (or a courier service) may deliver your paper application to the Department by hand. You must deliver the original and two copies of your application by hand, on or before the application deadline date, to the Department at the following address:

U.S. Department of Education, Application Control Center, Attention: (CFDA Number 84.215H), 550 12th Street SW., Room 7039, Potomac Center Plaza, Washington, DC 20202–4260

The Application Control Center accepts hand deliveries daily between 8:00 a.m. and 4:30:00 p.m., Washington, DC time, except Saturdays, Sundays, and Federal holidays.

Note for Mail or Hand Delivery of Paper Applications: If you mail or hand deliver your application to the Department—

(1) You must indicate on the envelope and—if not provided by the Department—in Item 11 of the SF 424 the CFDA number, including suffix letter, if any, of the competition under which you are submitting your application; and

(2) The Application Control Center will mail to you a notification of receipt of your grant application. If you do not receive this notification within 15 business days from the application deadline date, you should call the U.S. Department of Education Application Control Center at (202) 245–6288.

V. Application Review Information

1. *Selection Criteria:* The selection criteria for this competition are from 34 CFR 75.210, and are listed below. The points assigned to each criterion are indicated in the parentheses next to the criterion. An applicant may earn up to a total of 100 points based on the selection criteria for the application.

A. *Significance.* (up to 20 points)

The Secretary considers the significance of the proposed project. In determining the significance of the proposed project, the Secretary considers the following factors:

1. The likely utility of the products (such as information, materials, processes, or techniques) that will result from the proposed project, including the potential for their being used effectively in a variety of other settings.

2. The extent to which the proposed project involves the development or demonstration of promising new strategies that build on, or are alternatives to, existing strategies.

3. The potential contribution of the proposed project to the development and advancement of theory, knowledge, and practices in the field of study.

B. *Quality of the project design.* (up to 45 points)

The Secretary considers the quality of the design of the proposed project. In determining the quality of the design of the proposed project, the Secretary considers the following factors:

1. The extent to which the proposed project is supported by Strong Theory.

2. The extent to which the proposed project represents an exceptional approach to the priority or priorities established for the competition.

3. The extent to which the proposed activities constitute a coherent, sustained program of research and development in the field, including, as appropriate, a substantial addition to an ongoing line of inquiry.

4. The extent to which performance feedback and continuous improvement are integral to the design of the proposed project.

C. *Quality of the management plan.* (up to 15 points)

The Secretary considers the quality of the management plan for the proposed project. In determining the quality of the management plan for the proposed project, the Secretary considers the following factors:

1. The adequacy of procedures for ensuring feedback and continuous improvement in the operation of the proposed project.

2. The adequacy of the management plan to achieve the objectives of the proposed project on time and within budget, including clearly defined responsibilities, timelines, and milestones for accomplishing project tasks.

3. The relevance and demonstrated commitment of each partner in the proposed project to the implementation and success of the project.

D. *Quality of the project evaluation.* (up to 20 points)

The Secretary considers the quality of the evaluation to be conducted of the proposed project. In determining the quality of the evaluation, the Secretary considers the following factors:

1. The extent to which the methods of evaluation provide for examining the effectiveness of project implementation strategies.

2. The extent to which the evaluation will provide guidance about effective strategies suitable for replication or testing in other settings.

3. The extent to which the methods of evaluation will provide performance feedback and permit periodic assessment of progress toward achieving intended outcomes.

4. The extent to which the methods of evaluation will, if well-implemented, produce evidence about the project's effectiveness that would meet the What Works Clearinghouse Evidence Standards with reservations.

Note: Applicants may wish to review the following technical assistance resources on evaluation:

(1) WWC Procedures and Standards Handbook: *http://ies.ed.gov/ncee/wwc/references/idocviewer/doc.aspx?docid=19&tocid=1;* and (2) IES/NCEE Technical Methods papers: *http://ies.ed.gov/ncee/tech_methods.* In addition, we invite applicants to view two Webinar recordings that were hosted by the Institute of Education Sciences (IES). The first Webinar addresses strategies for designing and executing well-designed Quasi-experimental Design Studies. This Webinar is available at: *http://ies.ed.gov/ncee/wwc/news.aspx?sid=23.* The second Webinar focuses on more rigorous evaluation designs, including strategies for designing and executing Randomized Controlled Trials. This Webinar is available at: *http://ies.ed.gov/ncee/wwc/news.aspx?sid=18.*

2. *Review and Selection Process:* Peer reviewers will review all applications eligible for Skills for Success grants that are submitted by the established deadline.

We remind potential applicants that in reviewing applications in any discretionary grant competition, the Secretary may consider, under 34 CFR 75.217(d)(3), the past performance of the applicant in carrying out a previous award, such as the applicant's use of funds, achievement of project objectives, and compliance with grant conditions. The Secretary may also consider whether the applicant failed to submit a timely performance report or submitted a report of unacceptable quality.

In addition, in making a competitive grant award, the Secretary also requires various assurances including those applicable to Federal civil rights laws that prohibit discrimination in programs or activities receiving Federal financial assistance from the Department of Education (34 CFR 100.4, 104.5, 106.4, 108.8, and 110.23).

3. *Special Conditions:* Under 2 CFR 3474.10, the Secretary may impose special conditions and, in appropriate circumstances, high-risk conditions on a grant if the applicant or grantee is not financially stable; has a history of unsatisfactory performance; has a financial or other management system that does not meet the standards in 2 CFR part 200, subpart D; has not fulfilled the conditions of a prior grant; or is otherwise not responsible.

VI. Award Administration Information

1. *Award Notices:* If your application is successful, we notify your U.S. Representative and U.S. Senators and send you a Grant Award Notification (GAN); or we may send you an email containing a link to access an electronic version of your GAN. We may notify you informally, also.

If your application is not evaluated or not selected for funding, we notify you.

2. *Administrative and National Policy Requirements:* We identify administrative and national policy requirements in the application package and reference these and other requirements in the *Applicable Regulations* section of this notice.

We reference the regulations outlining the terms and conditions of an award in the *Applicable Regulations* section of this notice and include these and other specific conditions in the GAN. The GAN also incorporates your approved application as part of your binding commitments under the grant.

3. *Reporting:* (a) If you apply for a grant under this competition, you must ensure that you have in place the necessary processes and systems to comply with the reporting requirements in 2 CFR part 170 should you receive funding under the competition. This does not apply if you have an exception under 2 CFR 170.110(b).

(b) At the end of your project period, you must submit a final performance report, including financial information, as directed by the Secretary. If you receive a multi-year award, you must submit an annual performance report that provides the most current performance and financial expenditure information as directed by the Secretary under 34 CFR 75.118. The Secretary may also require more frequent performance reports under 34 CFR 75.720(c). For specific requirements on reporting, please go to *www.ed.gov/fund/grant/apply/appforms/appforms.html.*

4. *Performance Measures:* We have established two performance measures for the Skills for Success grants.

(1) The percentage of grantees that demonstrate improvement in participating students' academic and behavioral outcomes.

(2) The percentage of grantees that demonstrate that at least one tool or approach for enhancing participating students' non-cognitive skills is effective; refined, if necessary; and validated.

5. *Continuation Awards:* In making a continuation award under 34 CFR 75.253, the Secretary considers, among other things: Whether a grantee has made substantial progress in achieving the goals and objectives of the project; Whether the grantee has expended funds in a manner that is consistent with its approved application and budget; and, if the Secretary has established performance measurement requirements, the performance targets in the grantee's approved application. In making a continuation grant, the Secretary also considers whether the grantee is operating in compliance with the assurances in its approved application, including those applicable to Federal civil rights laws that prohibit discrimination in programs or activities receiving Federal financial assistance from the Department (34 CFR 100.4, 104.5, 106.4, 108.8, and 110.23).

VII. Agency Contact

FOR FURTHER INFORMATION CONTACT: Kelly Terpak, U.S. Department of Education, 400 Maryland Avenue SW., Room 4C107, Washington, DC 20202–5930. Telephone: (202) 205–5231. FAX: (202) 205–5631.

If you use a TDD or a TTY, call the Federal Relay Service, toll free, at 1–800–877–8339.

VIII. Other Information

Accessible Format: Individuals with disabilities can obtain this document and a copy of the application package in an accessible format (*e.g.,* braille, large print, audiotape, or compact disc) on request to the program contact person listed under **FOR FURTHER INFORMATION CONTACT** in section VII of this notice.

Electronic Access to This Document: The official version of this document is the document published in the **Federal Register**. Free Internet access to the official edition of the **Federal Register** and the Code of Federal Regulations is available via the Federal Digital System at: *www.gpo.gov/fdsys.* At this site you can view this document, as well as all other documents of this Department published in the **Federal Register**, in text or Adobe Portable Document Format (PDF). To use PDF you must have Adobe Acrobat Reader, which is available free at the site.

You may also access documents of the Department published in the **Federal Register** by using the article search feature at: *www.federalregister.gov.* Specifically, through the advanced search feature at this site, you can limit your search to documents published by the Department.

Dated: June 4, 2015.

Nadya Chinoy Dabby,

Assistant Deputy Secretary for Innovation and Improvement.

[FR Doc. 2015–14081 Filed 6–8–15; 8:45 am]

BILLING CODE 4000–01–P

DEPARTMENT OF EDUCATION

Federal Need Analysis Methodology for the 2016–17 Award Year—Federal Pell Grant, Federal Perkins Loan, Federal Work-Study, Federal Supplemental Educational Opportunity Grant, William D. Ford Federal Direct Loan, Iraq and Afghanistan Service Grant and TEACH Grant Programs

Correction

In notice document 2015–12803 beginning on page 30217 in the issue of Wednesday, May 27, 2015, make the following correction:

On page 30220, the table titled ''INDEPENDENT STUDENTS WITH DEPENDENTS OTHER THAN A SPOUSE'' is corrected in part to read as follows:

INDEPENDENT STUDENTS WITH DEPENDENTS OTHER THAN A SPOUSE—Continued

If the age of the student is	And they are	
	Married	Single
	Then the education savings and asset protection allowance is	
* * * * *	*	*
64	10,400	5,700
* * * * *	*	*

[FR Doc. C1–2015–12803 Filed 6–8–15; 8:45 am]

BILLING CODE 1505–01–D

DEPARTMENT OF ENERGY

[Certification Notice—235]

Notice of Filing of Self-Certification of Coal Capability Under the Powerplant and Industrial Fuel Use Act

AGENCY: Office of Electricity Delivery and Energy Reliability, DOE.

ACTION: Notice of filing.

SUMMARY: On April 30, 2015, Pio Pico Energy Center, LLC, as owner and operator of a new base load electric powerplant, submitted a coal capability self-certification to the Department of Energy (DOE) pursuant to § 201(d) of the Powerplant and Industrial Fuel Use Act of 1978 (FUA), as amended, and DOE regulations. FUA and regulations thereunder require DOE to publish a notice of filing of self-certification in the **Federal Register**. 42 U.S.C. 8311(d) and 10 CFR 501.61(c).

ADDRESSES: Copies of coal capability self-certification filings are available for public inspection, upon request, in the Office of Electricity Delivery and Energy Reliability, Mail Code OE–20, Room 8G–024, Forrestal Building, 1000 Independence Avenue SW., Washington, DC 20585.

FOR FURTHER INFORMATION CONTACT: Christopher Lawrence at (202) 586–5260.

SUPPLEMENTARY INFORMATION: Title II of FUA, as amended (42 U.S.C. 8301 *et seq.*), provides that no new base load electric powerplant may be constructed or operated without the capability to use coal or another alternate fuel as a primary energy source. Pursuant to FUA in order to meet the requirement of coal capability, the owner or operator of such a facility proposing to use natural gas or petroleum as its primary energy source shall certify to the Secretary of Energy (Secretary) prior to construction, or prior to operation as a base load electric powerplant, that such powerplant has the capability to use coal or another alternate fuel. Such certification establishes compliance with FUA section 201(a) as of the date it is filed with the Secretary. 42 U.S.C. 8311.

The following owner of a proposed new base load electric powerplant has filed a self-certification of coal-capability with DOE pursuant to FUA section 201(d) and in accordance with DOE regulations in 10 CFR 501.60 and 501.61:

OWNER: Pio Pico Energy Center, LLC
CAPACITY: 313 megawatts (MW)
PLANT LOCATION: Pio Pico Energy Center, LLC, 7363 Calzada De La Fuente, San Diego, CA 92154
IN-SERVICE DATE: Approximately September 30, 2016

Issued in Washington, DC, on June 3, 2015.

Brian Mills,

Director, Permitting and Siting, Office of Electricity Delivery and Energy Reliability.

[FR Doc. 2015–14059 Filed 6–8–15; 8:45 am]

BILLING CODE 6450–01–P

DEPARTMENT OF ENERGY

Federal Energy Regulatory Commission

[Docket No. ER15–1810–000]

Dillon Power, LLC; Supplemental Notice that Initial Market-Based Rate Filing Includes Request for Blanket Section 204 Authorization

This is a supplemental notice in the above-referenced proceeding of Dillon Power, LLC's application for market-based rate authority, with an accompanying rate tariff, noting that such application includes a request for blanket authorization, under 18 CFR part 34, of future issuances of securities and assumptions of liability.

Any person desiring to intervene or to protest should file with the Federal Energy Regulatory Commission, 888 First Street, NE., Washington, DC 20426, in accordance with Rules 211 and 214 of the Commission's Rules of Practice and Procedure (18 CFR 385.211 and 385.214). Anyone filing a motion to intervene or protest must serve a copy of that document on the Applicant.

Notice is hereby given that the deadline for filing protests with regard to the applicant's request for blanket authorization, under 18 CFR part 34, of future issuances of securities and assumptions of liability, is June 22, 2015.

The Commission encourages electronic submission of protests and interventions in lieu of paper, using the FERC Online links at *http://www.ferc.gov.* To facilitate electronic service, persons with Internet access who will eFile a document and/or be listed as a contact for an intervenor must create and validate an eRegistration account using the eRegistration link. Select the eFiling link to log on and submit the intervention or protests.

Persons unable to file electronically should submit an original and 5 copies of the intervention or protest to the Federal Energy Regulatory Commission, 888 First Street NE., Washington, DC 20426.

The filings in the above-referenced proceeding are accessible in the Commission's eLibrary system by clicking on the appropriate link in the above list. They are also available for electronic review in the Commission's Public Reference Room in Washington, DC. There is an eSubscription link on the Web site that enables subscribers to receive email notification when a document is added to a subscribed docket(s). For assistance with any FERC Online service, please email *FERCOnlineSupport@ferc.gov.* or call (866) 208–3676 (toll free). For TTY, call (202) 502–8659.

Dated: June 2, 2015.

Nathaniel J. Davis, Sr.,

Deputy Secretary.

[FR Doc. 2015–14017 Filed 6–8–15; 8:45 am]

BILLING CODE 6717–01–P

DEPARTMENT OF ENERGY

Federal Energy Regulatory Commission

Combined Notice of Filings #1

Take notice that the Commission received the following electric corporate filings:

Docket Numbers: EC15–150–000.
Applicants: Banco Santander, S.A., Tonopah Solar I, LLC.
Description: Application for Authorization for Disposition of Jurisdictional Facilities and Requests for Confidential Treatment, Expedited Consideration, and Waivers of Banco Santander, S.A., et al.
Filed Date: 5/29/15.
Accession Number: 20150529–5507.
Comments Due: 5 p.m. ET 6/19/15.

Docket Numbers: EC15–151–000.
Applicants: Pilot Hill Wind, LLC.
Description: Application Pursuant to Section 203 of the Federal Power Act of Pilot Hill Wind, LLC for Authorization for Disposition of Jurisdictional Facilities and Request for Expedited Action.
Filed Date: 6/1/15.
Accession Number: 20150601–5432.
Comments Due: 5 p.m. ET 6/22/15.

Take notice that the Commission received the following exempt wholesale generator filings:

Docket Numbers: EG15–90–000.
Applicants: Adelanto Solar, LLC.
Description: Notice of Self-Certification of Exempt Wholesale Generator Status of Adelanto Solar, LLC.
Filed Date: 5/29/15.
Accession Number: 20150529–5535.
Comments Due: 5 p.m. ET 6/19/15.

Docket Numbers: EG15–91–000.
Applicants: Adelanto Solar II, LLC.
Description: Notice of Self-Certification of Exempt Wholesale Generator Status of Adelanto Solar II, LLC.
Filed Date: 5/29/15.
Accession Number: 20150529–5536.
Comments Due: 5 p.m. ET 6/19/15.

Take notice that the Commission received the following electric rate filings:

Docket Numbers: ER10–2977–005.
Applicants: Mesquite Power, LLC.
Description: Supplement to May 5, 2015 Notice of Non-Material Change in Status of Mesquite Power, LLC.
Filed Date: 6/1/15.
Accession Number: 20150601–5409.
Comments Due: 5 p.m. ET 6/22/15.

Docket Numbers: ER12–778–002.
Applicants: Puget Sound Energy, Inc.
Description: Compliance filing per 35: Attachment H–1 Formula TX Rate Compliance Filing to be effective 6/1/2015.
Filed Date: 6/1/15.
Accession Number: 20150601–5117.
Comments Due: 5 p.m. ET 6/22/15.

Docket Numbers: ER12–1179–023.
Applicants: Southwest Power Pool, Inc.
Description: Compliance filing per 35: Compliance Filing in ER12–1179—Bid Limit for TCR Auction to be effective N/A.
Filed Date: 6/1/15.
Accession Number: 20150601–5125.
Comments Due: 5 p.m. ET 6/22/15.

Docket Numbers: ER12–2414–003.
Applicants: New York Independent System Operator, Inc.
Description: Compliance filing per 35: Compliance filing revision of BSM Rules to be effective 6/22/2012.
Filed Date: 6/1/15.
Accession Number: 20150601–5128.
Comments Due: 5 p.m. ET 6/22/15.

Docket Numbers: ER13–1928–004.
Applicants: Duke Energy Progress, Inc., Duke Energy Carolinas, LLC.
Description: Compliance filing per 35: Order No. 1000 Interregional—SERTP & PJM to be effective 1/1/2015.
Filed Date: 5/26/15.
Accession Number: 20150526–5302.
Comments Due: 5 p.m. ET 6/16/15.

Docket Numbers: ER14–2518–003.
Applicants: New York Independent System Operator, Inc.
Description: Compliance filing per 35: Outage States compliance with 4/30/15 order to be effective 5/1/2015.
Filed Date: 6/1/15.
Accession Number: 20150601–5127.
Comments Due: 5 p.m. ET 6/22/15.

Docket Numbers: ER15–704–003.
Applicants: Pacific Gas and Electric Company.
Description: Compliance filing per 35: Compliance Filing to Revise CCSF WDT SA Appendices B, C and D to be effective 7/1/2015.
Filed Date: 6/1/15.
Accession Number: 20150601–5124.
Comments Due: 5 p.m. ET 6/22/15.

Docket Numbers: ER15–1152–001.
Applicants: Southwest Power Pool, Inc.
Description: Compliance filing per 35: Compliance Filing in ER15–1152—Transitional ARR Allocation Process to be effective 5/1/2015.
Filed Date: 6/1/15.
Accession Number: 20150601–5104.
Comments Due: 5 p.m. ET 6/22/15.

Docket Numbers: ER15–1404–001.
Applicants: Mississippi Power Company.
Description: Compliance filing per 35: MRA 26 Rate Case Compliance Filing to be effective 4/1/2015.
Filed Date: 6/1/15.
Accession Number: 20150601–5126.
Comments Due: 5 p.m. ET 6/22/15.

Docket Numbers: ER15–1475–001.
Applicants: North Star Solar, LLC.
Description: Supplement to May 1, 2015 North Star Solar, LLC tariff filing amendment.
Filed Date: 6/1/15.
Accession Number: 20150601–5419.
Comments Due: 5 p.m. ET 6/22/15.

Docket Numbers: ER15–1821–000.
Applicants: J. Aron & Company.
Description: Section 205(d) rate filing per 35.13(a)(2)(iii): Category 1 Seller Request for Central to be effective 5/30/2015.
Filed Date: 5/29/15.
Accession Number: 20150529–5449.
Comments Due: 5 p.m. ET 6/19/15.

Docket Numbers: ER15–1822–000.
Applicants: NorthWestern Corporation.
Description: Initial rate filing per 35.12 SA 743—Agreement with Montana Environmental Trust Group to be effective 6/1/2015.
Filed Date: 5/29/15.
Accession Number: 20150529–5450.
Comments Due: 5 p.m. ET 6/19/15.

Docket Numbers: ER15–1823–000.
Applicants: Pacific Gas and Electric Company.
Description: Section 205(d) rate filing per 35.13(a)(2)(iii): Western WDT May 2015 Biannual Filing to be effective 8/1/2015.
Filed Date: 5/29/15.
Accession Number: 20150529–5474.
Comments Due: 5 p.m. ET 6/19/15.

Docket Numbers: ER15–1824–000.
Applicants: Pacific Gas and Electric Company.
Description: Section 205(d) rate filing per 35.13(a)(2)(iii): Western IA May 2015 Biannual Filing to be effective 8/1/2015.
Filed Date: 5/29/15.
Accession Number: 20150529–5475.
Comments Due: 5 p.m. ET 6/19/15.

Docket Numbers: ER15–1825–000.
Applicants: California Independent System Operator Corporation.
Description: Section 205(d) rate filing per 35.13(a)(2)(iii): 2015–05–28 RSI Phase 1A Tariff Amendment to be effective 1/10/2016.
Filed Date: 5/29/15.
Accession Number: 20150529–5477.
Comments Due: 5 p.m. ET 6/19/15.

Docket Numbers: ER15–1826–000.
Applicants: Entergy Services, Inc.
Description: Ninth Annual filing implementing Service Schedule MSS–3 Rough Production Cost Equalization Bandwidth Calculation of Entergy Services, Inc. on behalf of the Entergy Operating Companies.

Filed Date: 5/29/15.
Accession Number: 20150529–5499.
Comments Due: 5 p.m. ET 6/19/15.

Docket Numbers: ER15–1827–000.
Applicants: Southwest Power Pool, Inc.
Description: Section 205(d) rate filing per 35.13(a)(2)(iii): 1148R21 American Electric Power NITSA and NOA to be effective 5/1/2015.
Filed Date: 6/1/15.
Accession Number: 20150601–5101.
Comments Due: 5 p.m. ET 6/22/15.

Docket Numbers: ER15–1828–000.
Applicants: Fenton Power Partners I, LLC.
Description: Section 205(d) rate filing per 35.13(a)(2)(iii): Market-Based Rate Tariff Revision & Request for Notice Requirement Waiver to be effective 6/1/2015.
Filed Date: 6/1/15.
Accession Number: 20150601–5102.
Comments Due: 5 p.m. ET 6/22/15.

Docket Numbers: ER15–1829–000.
Applicants: Hoosier Wind Project, LLC.
Description: Section 205(d) rate filing per 35.13(a)(2)(iii): Market-Based Rate Tariff Revision & Request for Notice Requirement Waiver to be effective 6/1/2015.
Filed Date: 6/1/15.
Accession Number: 20150601–5107.
Comments Due: 5 p.m. ET 6/22/15.

Docket Numbers: ER15–1830–000.
Applicants: Wapsipinicon Wind Project, LLC.
Description: Section 205(d) rate filing per 35.13(a)(2)(iii): Market-Based Rate Tariff Revision & Request for Notice Requirement Waiver to be effective 6/1/2015.
Filed Date: 6/1/15.
Accession Number: 20150601–5108.
Comments Due: 5 p.m. ET 6/22/15.

Docket Numbers: ER15–1831–000.
Applicants: AEP Texas Central Company.
Description: Section 205(d) rate filing per 35.13(a)(2)(iii): TCC–TNC-Brazos Electric Power Cooperative Amend & Restated TSA to be effective 5/5/2015.
Filed Date: 6/1/15.
Accession Number: 20150601–5112.
Comments Due: 5 p.m. ET 6/22/15.

Docket Numbers: ER15–1832–000.
Applicants: AEP Texas North Company.
Description: Section 205(d) rate filing per 35.13(a)(2)(iii): TCC–TNC-Brazos Electric Cooperative Amend & Restated TSA Concurrence to be effective 5/5/2015.
Filed Date: 6/1/15.
Accession Number: 20150601–5114.
Comments Due: 5 p.m. ET 6/22/15.

Docket Numbers: ER15–1833–000.
Applicants: Duke Energy Indiana, Inc.
Description: Tariff Withdrawal per 35.15: Cancellation of DMOC Tariff Volume No. 6 and No. 7 to be effective 8/1/2015.
Filed Date: 6/2/15.
Accession Number: 20150602–5009.
Comments Due: 5 p.m. ET 6/23/15.

Docket Numbers: ER15–1834–000.
Applicants: Duke Energy Ohio, Inc.
Description: Tariff Withdrawal per 35.15: Cancellation of DMOC Tariff Volume No. 6 and No. 7 to be effective 8/1/2015.
Filed Date: 6/2/15.
Accession Number: 20150602–5011.
Comments Due: 5 p.m. ET 6/23/15.

Docket Numbers: ER15–1835–000.
Applicants: New York Independent System Operator, Inc., Niagara Mohawk Power Corporation.
Description: Section 205(d) rate filing per 35.13(a)(2)(iii): NMPC—Fortistar LGIA SA No. 2220 to be effective 6/1/2015.
Filed Date: 6/2/15.
Accession Number: 20150602–5018.
Comments Due: 5 p.m. ET 6/23/15.

Docket Numbers: ER15–1836–000.
Applicants: PPL Electric Utilities Corporation.
Description: Notice of Cancellation of Interconnection Agreements of PPL Electric Utilities Corporation.
Filed Date: 5/29/15.
Accession Number: 20150529–5500.
Comments Due: 5 p.m. ET 6/19/15.

Take notice that the Commission received the following electric securities filings:

Docket Numbers: ES15–31–000.
Applicants: Ameren Transmission Company of Illinois.
Description: Application for Authorization under Federal Power Act Section 204 of Ameren Transmission Company of Illinois.
Filed Date: 5/29/15.
Accession Number: 20150529–5531.
Comments Due: 5 p.m. ET 6/19/15.

The filings are accessible in the Commission's eLibrary system by clicking on the links or querying the docket number.

Any person desiring to intervene or protest in any of the above proceedings must file in accordance with Rules 211 and 214 of the Commission's Regulations (18 CFR 385.211 and 385.214) on or before 5:00 p.m. Eastern time on the specified comment date. Protests may be considered, but intervention is necessary to become a party to the proceeding.

eFiling is encouraged. More detailed information relating to filing requirements, interventions, protests, service, and qualifying facilities filings can be found at: *http://www.ferc.gov/docs-filing/efiling/filing-req.pdf.* For other information, call (866) 208–3676 (toll free). For TTY, call (202) 502–8659.

Dated: June 2, 2015.

Nathaniel J. Davis, Sr.,

Deputy Secretary.

[FR Doc. 2015–14014 Filed 6–8–15; 08:45 am]

BILLING CODE 6717–01–P

DEPARTMENT OF ENERGY

Federal Energy Regulatory Commission

Combined Notice of Filings

Take notice that the Commission has received the following Natural Gas Pipeline Rate and Refund Report filings:

Docket Numbers: RP15–773–000.
Applicants: Trailblazer Pipeline Company LLC.
Description: Annual Incidental Purchases and Sales Report of Trailblazer Pipeline Company LLC under RP15–773.
Filed Date: 3/30/15.
Accession Number: 20150330–5578.
Comments Due: 5 p.m. ET 5/4/15.

Docket Numbers: RP15–805–000.
Applicants: Vector Pipeline L. P.
Description: Annual Fuel Use Report of Vector Pipeline L. P. under RP15–805.
Filed Date: 3/31/15.
Accession Number: 20150331–5475.
Comments Due: 5 p.m. ET 5/4/15.

Docket Numbers: RP15–1029–000.
Applicants: Gulf Crossing Pipeline Company LLC.
Description: Section 4(d) rate filing per 154.204: Cap Rel Neg Rate Agmt (Vanguard 597, 598 to Tenaska 1728, 1729) to be effective 6/1/2015.
Filed Date: 6/1/15.
Accession Number: 20150601–5091.
Comments Due: 5 p.m. ET 6/15/15.

Docket Numbers: RP15–1030–000.
Applicants: Gulf South Pipeline Company, LP.
Description: Section 4(d) rate filing per 154.204: Cap Rel Neg Rate Agmt (Encana 37663 to BP 44703) to be effective 6/1/2015.
Filed Date: 6/1/15.
Accession Number: 20150601–5092.
Comments Due: 5 p.m. ET 6/15/15.

Docket Numbers: RP15–1031–000.
Applicants: Gulf South Pipeline Company, LP.
Description: Section 4(d) rate filing per 154.204: Cap Rel Neg Rate Agmts (CenterPoint(various) to BP(various) eff June 1) to be effective 6/1/2015.
Filed Date: 6/1/15.

Accession Number: 20150601–5093.
Comments Due: 5 p.m. ET 6/15/15.

Docket Numbers: RP15–1032–000.
Applicants: Gulf South Pipeline Company, LP.
Description: Section 4(d) rate filing per 154.204: Cap Rel Neg Rate Agmt (Willmut 35221 to BP 44724) to be effective 6/1/2015.
Filed Date: 6/1/15.
Accession Number: 20150601–5094.
Comments Due: 5 p.m. ET 6/15/15.

Docket Numbers: RP15–1033–000.
Applicants: Gulf South Pipeline Company, LP.
Description: Section 4(d) rate filing per 154.204: Cap Rel Neg Rate Agmts (Atlanta Gas 8438 to Various eff 6/1/15) to be effective 6/1/2015.
Filed Date: 6/1/15.
Accession Number: 20150601–5095.
Comments Due: 5 p.m. ET 6/15/15.

Docket Numbers: RP15–1034–000.
Applicants: Gulf South Pipeline Company, LP.
Description: Section 4(d) rate filing per 154.204: Amendments to Neg Rate Agmts (QEP 36601–43, 37657–153) to be effective 6/1/2015.
Filed Date: 6/1/15.
Accession Number: 20150601–5096.
Comments Due: 5 p.m. ET 6/15/15.

Docket Numbers: RP15–1035–000.
Applicants: Enable Gas Transmission, LLC.
Description: Section 4(d) rate filing per 154.204: Negotiated Rate Filing—June 2015- ANR 4026 Removal to be effective 6/1/2015.
Filed Date: 6/1/15.
Accession Number: 20150601–5097.
Comments Due: 5 p.m. ET 6/15/15.

Docket Numbers: RP15–1036–000.
Applicants: TC Offshore LLC.
Description: Section 4(d) rate filing per 154.204: Arena Amended Neg Rate Agmt to be effective 6/1/2015.
Filed Date: 6/1/15.
Accession Number: 20150601–5098.
Comments Due: 5 p.m. ET 6/15/15.

Docket Numbers: RP15–1037–000.
Applicants: Discovery Gas Transmission LLC.
Description: Section 4(d) rate filing per 154.403(d)(2): 2015 FL&U Submittal to be effective 7/1/2015.
Filed Date: 6/1/15.
Accession Number: 20150601–5103.
Comments Due: 5 p.m. ET 6/15/15.

Docket Numbers: RP15–1038–000.
Applicants: Dominion Transmission, Inc.
Description: Section 4(d) rate filing per 154.204: DTI—June 1, 2015 Nonconforming Service Agreements to be effective 7/1/2015.
Filed Date: 6/1/15.
Accession Number: 20150601–5105.
Comments Due: 5 p.m. ET 6/15/15.

Docket Numbers: RP15–1039–000.
Applicants: Eastern Shore Natural Gas Company.
Description: Section 4(d) rate filing per 154.204: Fuel Retention and Cash Out Adjustment Filing to be effective 7/1/2015.
Filed Date: 6/1/15.
Accession Number: 20150601–5116.
Comments Due: 5 p.m. ET 6/15/15.

Docket Numbers: RP15–1040–000.
Applicants: Equitrans, L.P.
Description: Section 4(d) rate filing per 154.204: Negotiated Capacity Release Agreements- 6/1/2015 to be effective 6/1/2015.
Filed Date: 6/1/15.
Accession Number: 20150601–5123.
Comments Due: 5 p.m. ET 6/15/15.

The filings are accessible in the Commission's eLibrary system by clicking on the links or querying the docket number.

Any person desiring to intervene or protest in any of the above proceedings must file in accordance with Rules 211 and 214 of the Commission's Regulations (18 CFR 385.211 and 385.214) on or before 5 p.m. Eastern time on the specified comment date. Protests may be considered, but intervention is necessary to become a party to the proceeding.

eFiling is encouraged. More detailed information relating to filing requirements, interventions, protests, service, and qualifying facilities filings can be found at: *http://www.ferc.gov/docs-filing/efiling/filing-req.pdf.* For other information, call (866) 208–3676 (toll free). For TTY, call (202) 502–8659.

Filings in Existing Proceedings

Docket Numbers: RP15–618–002.
Applicants: Discovery Gas Transmission LLC.
Description: Compliance filing per 154.203: Gas Quality Compliance Filing to be effective 7/1/2015.
Filed Date: 6/1/15.
Accession Number: 20150601–5100.
Comments Due: 5 p.m. ET 6/15/15.

Any person desiring to protest in any of the above proceedings must file in accordance with Rule 211 of the Commission's Regulations (18 CFR 385.211) on or before 5 p.m. Eastern time on the specified comment date.

The filings are accessible in the Commission's eLibrary system by clicking on the links or querying the docket number.

eFiling is encouraged. More detailed information relating to filing requirements, interventions, protests, service, and qualifying facilities filings can be found at: *http://www.ferc.gov/docs-filing/efiling/filing-req.pdf.* For other information, call (866) 208–3676 (toll free). For TTY, call (202) 502–8659.

Dated: June 2, 2015.

Nathaniel J. Davis, Sr.,

Deputy Secretary.

[FR Doc. 2015–14025 Filed 6–8–15; 8:45 am]

BILLING CODE 6717–01–P

DEPARTMENT OF ENERGY

Federal Energy Regulatory Commission

[Docket No. ER15–1841–000]

Panda Liberty LLC; Supplemental Notice That Initial Market-Based Rate Filing Includes Request for Blanket Section 204 Authorization

This is a supplemental notice in the above-referenced proceeding Panda Liberty LLC's application for market-based rate authority, with an accompanying rate tariff, noting that such application includes a request for blanket authorization, under 18 CFR part 34, of future issuances of securities and assumptions of liability.

Any person desiring to intervene or to protest should file with the Federal Energy Regulatory Commission, 888 First Street NE., Washington, DC 20426, in accordance with Rules 211 and 214 of the Commission's Rules of Practice and Procedure (18 CFR 385.211 and 385.214). Anyone filing a motion to intervene or protest must serve a copy of that document on the Applicant.

Notice is hereby given that the deadline for filing protests with regard to the applicant's request for blanket authorization, under 18 CFR part 34, of future issuances of securities and assumptions of liability, is June 23, 2015.

The Commission encourages electronic submission of protests and interventions in lieu of paper, using the FERC Online links at *http://www.ferc.gov.* To facilitate electronic service, persons with Internet access who will eFile a document and/or be listed as a contact for an intervenor must create and validate an eRegistration account using the eRegistration link. Select the eFiling link to log on and submit the intervention or protests.

Persons unable to file electronically should submit an original and 5 copies of the intervention or protest to the Federal Energy Regulatory Commission, 888 First Street NE., Washington, DC 20426.

The filings in the above-referenced proceeding are accessible in the

Commission's eLibrary system by clicking on the appropriate link in the above list. They are also available for electronic review in the Commission's Public Reference Room in Washington, DC. There is an eSubscription link on the Web site that enables subscribers to receive email notification when a document is added to a subscribed docket(s). For assistance with any FERC Online service, please email *FERCOnlineSupport@ferc.gov.* or call (866) 208–3676 (toll free). For TTY, call (202) 502–8659.

Dated: June 3, 2015.

Nathaniel J. Davis, Sr.,

Deputy Secretary.

[FR Doc. 2015–14024 Filed 6–8–15; 8:45 am]

BILLING CODE 6717–01–P

DEPARTMENT OF ENERGY

Federal Energy Regulatory Commission

[Docket No. ER15–1676–000]

Balko Wind Transmission, LLC; Supplemental Notice That Initial Market-Based Rate Filing Includes Request for Blanket Section 204 Authorization

This is a supplemental notice in the above-referenced proceeding of Balko Wind Transmission, LLC's application for market-based rate authority, with an accompanying rate tariff, noting that such application includes a request for blanket authorization, under 18 CFR part 34, of future issuances of securities and assumptions of liability.

Any person desiring to intervene or to protest should file with the Federal Energy Regulatory Commission, 888 First Street, NE., Washington, DC 20426, in accordance with Rules 211 and 214 of the Commission's Rules of Practice and Procedure (18 CFR 385.211 and 385.214). Anyone filing a motion to intervene or protest must serve a copy of that document on the Applicant.

Notice is hereby given that the deadline for filing protests with regard to the applicant's request for blanket authorization, under 18 CFR part 34, of future issuances of securities and assumptions of liability, is June 22, 2015.

The Commission encourages electronic submission of protests and interventions in lieu of paper, using the FERC Online links at *http://www.ferc.gov.* To facilitate electronic service, persons with Internet access who will eFile a document and/or be listed as a contact for an intervenor must create and validate an eRegistration account using the eRegistration link. Select the eFiling link to log on and submit the intervention or protests.

Persons unable to file electronically should submit an original and 5 copies of the intervention or protest to the Federal Energy Regulatory Commission, 888 First Street NE., Washington, DC 20426.

The filings in the above-referenced proceeding are accessible in the Commission's eLibrary system by clicking on the appropriate link in the above list. They are also available for electronic review in the Commission's Public Reference Room in Washington, DC. There is an eSubscription link on the Web site that enables subscribers to receive email notification when a document is added to a subscribed docket(s). For assistance with any FERC Online service, please email *FERCOnlineSupport@ferc.gov,* or call (866) 208–3676 (toll free). For TTY, call (202) 502–8659.

Dated: June 2, 2015.

Nathaniel J. Davis, Sr.,

Deputy Secretary.

[FR Doc. 2015–14016 Filed 6–8–15; 8:45 am]

BILLING CODE 6717–01–P

DEPARTMENT OF ENERGY

Federal Energy Regulatory Commission

Combined Notice of Filings #2

Take notice that the Commission received the following electric rate filings:

Docket Numbers: ER15–1837–000.

Applicants: Midcontinent Independent System Operator, Inc., Ameren Illinois Company.

Description: Section 205(d) rate filing per 35.13(a)(2)(iii): 2015–06–02_SA 2782 ATXI–AIC Construction Agreement to be effective 6/2/2015.

Filed Date: 6/2/15.

Accession Number: 20150602–5108.

Comments Due: 5 p.m. ET 6/23/15.

Docket Numbers: ER15–1838–000.

Applicants: New England Power Company, Massachusetts Electric Company.

Description: Section 205(d) rate filing per 35.13(a)(2)(iii): Amended Service Agmt with Paxton Municipal Light Dept. & Notice Waiver Request to be effective 4/1/2015.

Filed Date: 6/2/15.

Accession Number: 20150602–5150.

Comments Due: 5 p.m. ET 6/23/15.

Docket Numbers: ER15–1839–000.

Applicants: Interstate Power and Light Company.

Description: Section 205(d) rate filing per 35.13(a)(2)(iii): IPL Change in Depreciation Rates for Wholeasle Production Service to be effective 7/1/2015.

Filed Date: 6/2/15.

Accession Number: 20150602–5158.

Comments Due: 5 p.m. ET 6/23/15.

Docket Numbers: ER15–1840–000.

Applicants: Pacific Gas and Electric Company.

Description: Section 205(d) rate filing per 35.13(a)(2)(iii): CDWR WPA Regarding Wind Gap Pre-Energization Testing to be effective 6/1/2015 under ER15–1840 Filing Type: 10.

Filed Date: 6/2/15.

Accession Number: 20150602–5159.

Comments Due: 5 p.m. ET 6/23/15.

Docket Numbers: ER15–1841–000.

Applicants: Panda Liberty LLC.

Description: Initial rate filing per 35.12 FERC Electric Tariff, Volume No. 1 (MBR Application) to be effective 7/17/2015 under ER15–1841 Filing Type: 400.

Filed Date: 6/2/15.

Accession Number: 20150602–5161.

Comments Due: 5 p.m. ET 6/23/15.

Take notice that the Commission received the following electric reliability filings:

Docket Numbers: RR15–11–000.

Applicants: North American Electric Reliability Corporation.

Description: Request of the North American Electric Reliability Corporation for Approval of the Amended Compliance and Certification Committee Charter.

Filed Date: 6/2/15.

Accession Number: 20150602–5107.

Comments Due: 5 p.m. ET 6/23/15.

The filings are accessible in the Commission's eLibrary system by clicking on the links or querying the docket number.

Any person desiring to intervene or protest in any of the above proceedings must file in accordance with Rules 211 and 214 of the Commission's Regulations (18 CFR 385.211 and 385.214) on or before 5:00 p.m. Eastern time on the specified comment date. Protests may be considered, but intervention is necessary to become a party to the proceeding.

eFiling is encouraged. More detailed information relating to filing requirements, interventions, protests, service, and qualifying facilities filings can be found at: *http://www.ferc.gov/docs-filing/efiling/filing-req.pdf.* For other information, call (866) 208–3676 (toll free). For TTY, call (202) 502–8659.

Dated: June 2, 2015.

Nathaniel J. Davis, Sr.,

Deputy Secretary.

[FR Doc. 2015–14015 Filed 6–8–15; 8:45 am]

BILLING CODE 6717–01–P

DEPARTMENT OF ENERGY

Federal Energy Regulatory Commission

Combined Notice of Filings #1

Take notice that the Commission received the following electric corporate filings:

Docket Numbers: EC15–152–000.
Applicants: American Transmission Company LLC.
Description: Application for Authority to Acquire Transmission Facilities of American Transmission Company LLC.
Filed Date: 6/2/15.
Accession Number: 20150602–5199.
Comments Due: 5 p.m. ET 6/23/15.

Docket Numbers: EC15–153–000.
Applicants: PowerOne Corporation, ResCom Energy LLC.
Description: Application under Section 203 of ResCom Energy LLC, et al.
Filed Date: 6/2/15.
Accession Number: 20150602–5204.
Comments Due: 5 p.m. ET 6/23/15.

Take notice that the Commission received the following electric rate filings:

Docket Numbers: ER10–2437–002.
Applicants: Arizona Public Service Company.
Description: Arizona Public Service Company Notice of Non-Material Change in Status.
Filed Date: 6/2/15.
Accession Number: 20150602–5200.
Comments Due: 5 p.m. ET 6/23/15.

Docket Numbers: ER10–2740–008; ER10–2742–006.
Applicants: Rocky Road Power, LLC, Tilton Energy LLC.
Description: Notice of Change in Status of Rocky Road Power, LLC, et al.
Filed Date: 6/2/15.
Accession Number: 20150602–5193.
Comments Due: 5 p.m. ET 6/23/15.

Docket Numbers: ER15–1364–001.
Applicants: Midcontinent Independent System Operator, Inc.
Description: Compliance filing per 35: 2015–06–03_SA 768 Compliance ATC–UPPCo Bill of Sales to be effective N/A.
Filed Date: 6/3/15.
Accession Number: 20150603–5034.
Comments Due: 5 p.m. ET 6/24/15.

Docket Numbers: ER15–1366–001.
Applicants: Midcontinent Independent System Operator, Inc.
Description: Compliance filing per 35: 2015–06–03_SA 2761 Compliance ATC–UPPCo CFA to be effective N/A.
Filed Date: 6/3/15.
Accession Number: 20150603–5039.
Comments Due: 5 p.m. ET 6/24/15.

Docket Numbers: ER15–1368–001.
Applicants: Midcontinent Independent System Operator, Inc.
Description: Compliance filing per 35: 2015–06–03_SA 2762 Compliance ATC–UPPCo PCA to be effective N/A.
Filed Date: 6/3/15.
Accession Number: 20150603–5043.
Comments Due: 5 p.m. ET 6/24/15.

Docket Numbers: ER15–1408–001.
Applicants: Midcontinent Independent System Operator, Inc.
Description: Compliance filing per 35: 2015–06–03_SA 2768 Compliance ATC-City of Plymouth CFA to be effective N/A.
Filed Date: 6/3/15.
Accession Number: 20150603–5065.
Comments Due: 5 p.m. ET 6/24/15.

Docket Numbers: ER15–1842–000.
Applicants: Southern California Edison Company.
Description: Tariff Withdrawal per 35.15: Notice of Cancellation FTSA with M–S–R to be effective 6/1/2015.
Filed Date: 6/3/15.
Accession Number: 20150603–5006.
Comments Due: 5 p.m. ET 6/24/15.

Docket Numbers: ER15–1843–000.
Applicants: NextEra Energy, Inc.
Description: Petition for Waiver of Affiliate Pricing Rules of NextEra Energy, Inc. under ER15–1843.
Filed Date: 6/2/15.
Accession Number: 20150602–5201.
Comments Due: 5 p.m. ET 6/23/15.

Docket Numbers: ER15–1844–000.
Applicants: PJM Interconnection, L.L.C.
Description: Section 205(d) rate filing per 35.13(a)(2)(iii): Original WMPA Service Agreement 4159; Queue AA1–131 to be effective 5/26/2015.
Filed Date: 6/3/15.
Accession Number: 20150603–5048.
Comments Due: 5 p.m. ET 6/24/15.

Docket Numbers: ER15–1845–000.
Applicants: New York Independent System Operator, Inc., Consolidated Edison Company of New York, Inc.
Description: Section 205(d) rate filing per 35.13(a)(2)(iii): O&R Con Ed-Ramapo Interconnection Agreement (SA 2216) to be effective 6/4/2015.
Filed Date: 6/3/15.
Accession Number: 20150603–5089.
Comments Due: 5 p.m. ET 6/24/15.

Docket Numbers: ER15–1846–000.
Applicants: New York Independent System Operator, Inc., Consolidated Edison Company of New York, Inc.
Description: Section 205(d) rate filing per 35.13(a)(2)(iii): SA 2217 O&R Con Ed-Sugarloaf interconnection agreement to be effective 6/4/2015.
Filed Date: 6/3/15.
Accession Number: 20150603–5091.
Comments Due: 5 p.m. ET 6/24/15.

Docket Numbers: ER15–1847–000.
Applicants: Tucson Electric Power Company.
Description: Section 205(d) rate filing per 35.13(a)(2)(iii): Re-collation Filing to be effective 6/3/2015.
Filed Date: 6/3/15.
Accession Number: 20150603–5128.
Comments Due: 5 p.m. ET 6/24/15.

Docket Numbers: ER15–1848–000.
Applicants: RTO Energy Trading, LLC.
Description: Tariff Withdrawal per 35.15: Notice of Cancellation of Market-Based Rate Tariff to be effective 6/30/2015.
Filed Date: 6/3/15.
Accession Number: 20150603–5131.
Comments Due: 5 p.m. ET 6/24/15.

The filings are accessible in the Commission's eLibrary system by clicking on the links or querying the docket number.

Any person desiring to intervene or protest in any of the above proceedings must file in accordance with Rules 211 and 214 of the Commission's Regulations (18 CFR 385.211 and 385.214) on or before 5:00 p.m. Eastern time on the specified comment date. Protests may be considered, but intervention is necessary to become a party to the proceeding.

eFiling is encouraged. More detailed information relating to filing requirements, interventions, protests, service, and qualifying facilities filings can be found at: *http://www.ferc.gov/docs-filing/efiling/filing-req.pdf.* For other information, call (866) 208–3676 (toll free). For TTY, call (202) 502–8659.

Dated: June 3, 2015.

Nathaniel J. Davis, Sr.,

Deputy Secretary.

[FR Doc. 2015–14023 Filed 6–8–15; 8:45 am]

BILLING CODE 6717–01–P

DEPARTMENT OF ENERGY

Federal Energy Regulatory Commission

Notice of Commission Staff Attendance

The Federal Energy Regulatory Commission (Commission) hereby gives notice that members of the Commission's staff may attend the following meetings related to the

transmission planning activities of the PJM Interconnection, L.L.C. (PJM):

PJM Planning Committee June 11, 2015, 9:30 a.m.–12:00 p.m. (EST).

PJM Transmission Expansion Advisory Committee June 11, 2015, 11:00 a.m.–3:00 p.m. (EST).

The above-referenced meetings will be held at: PJM Conference and Training Center, PJM Interconnection, 2750 Monroe Boulevard, Audubon, PA 19403.

The above-referenced meetings are open to stakeholders.

Further information may be found at *www.pjm.com.*

The discussions at the meeting described above may address matters at issue in the following proceedings:

Docket Nos. ER15–738 and ER15–739, *PJM Interconnection, L.L.C.*
Docket Nos. ER15–596, *PJM Interconnection, L.L.C.*
Docket Nos. ER15–33, *et al., The Dayton Power and Light Company*
Docket No. ER15–994, *PJM Interconnection, L.L.C.*
Docket No. ER15–639, *PJM Interconnection, L.L.C.*
Docket No. ER15–61, *PJM Interconnection, L.L.C. and American Transmission Systems Incorporated*
Docket No. ER14–2867, *Baltimore Gas & Electric Company, et al., and PJM Interconnection, L.L.C.*
Docket No. ER14–972 and ER14–1485, *PJM Interconnection, L.L.C.*
Docket No. ER14–1485, *PJM Interconnection, L.L.C.*
Docket No. ER14–2864, *PJM Interconnection, L.L.C.*
Docket No. ER13–90, *Public Service Electric and Gas Company and PJM Interconnection, L.L.C.*
Docket No. ER13–198, *PJM Interconnection, L.L.C.*
Docket No. ER13–1960, *ISO New England Inc. and New England Power Pool Participants Committee*
Docket No. ER13–1957, *ISO New England, Inc. et al.*
Docket No. ER13–195, *Indicated PJM Transmission Owners*
Docket No. ER13–1947, *PJM Interconnection, L.L.C.*
Docket No. ER13–1946, *New York Independent System Operator, Inc.*
Docket No. ER13–1945, *Midcontinent Independent System Operator, Inc.*
Docket No. ER13–1944, *PJM Interconnection, L.L.C.*
Docket No. ER13–1943, *Midcontinent Independent System Operator, Inc.*
Docket No. ER13–1942, *New York Independent System Operator, Inc.*
Docket No. ER13–1926, *PJM Interconnection, L.L.C. and Duquesne Light Company*
Docket No. ER13–1924, *PJM Interconnection, L.L.C. and Duquesne Light Company*
Docket No. ER15–1344, *PJM Interconnection, L.L.C.*
Docket No. ER15–1387, *PJM Transmission Owners*
Docket No. EL15–40, *Public Service Electric and Gas Company* v. *PJM Interconnection, L.L.C.*
Docket No. EL15–18, *Consolidated Edison Company of New York, Inc.* v. *PJM Interconnection, L.L.C.*
Docket EL15–41, *Essential Power Rock Springs, LLC et. al.* v. *PJM Interconnection, L.L.C.*

For more information, contact the following: Jonathan Fernandez, Office of Energy Market Regulation, Federal Energy Regulatory Commission, (202) 502–6604, *Jonathan.Fernandez@ferc.gov;* Alina Halay, Office of Energy Market Regulation, Federal Energy Regulatory Commission, (202) 502–6474, *Alina.Halay@ferc.gov.*

Dated: June 3, 2015.

Kimberly D. Bose,

Secretary.

[FR Doc. 2015–14106 Filed 6–8–15; 8:45 am]

BILLING CODE 6717–01–P

FEDERAL COMMUNICATIONS COMMISSION

Radio Broadcasting Services; AM or FM Proposals To Change The Community of License

AGENCY: Federal Communications Commission.

ACTION: Notice.

SUMMARY: The following applicants filed AM or FM proposals to change the community of license: Brown, William W, Station KWXM, Facility Id 190441, BMPH–20150507AAQ, From Homer, LA, To Simsboro, LA; Jackson Hole Broadcasting, Inc., Station KJNT, Facility Id 161525, BP–20150213ADN, From Jackson, WY, To Etna, WY; Kona Coast Radio, LLC, Station KIIQ, Facility Id 85056, BPH–20150406ACS, From Limon, CO, To Deer Trail, CO; Lazer Licenses, LLC, Station KXSM, Facility Id 34526, BPH–20150506ACG, From Hollister, CA, To Chualar, CA; Point Five LLC, Station New, Facility Id 191522, BMPH–20150507ACA, From Barstow, CA, To Kramer Junction, CA.

DATES: The agency must receive comments on or before August 10, 2015.

ADDRESSES: Federal Communications Commission, 445 12th Street SW., Washington, DC 20554.

FOR FURTHER INFORMATION CONTACT: Tung Bui, 202–418–2700.

SUPPLEMENTARY INFORMATION: The full text of these applications is available for inspection and copying during normal business hours in the Commission's Reference Center, 445 12th Street SW., Washington, DC 20554 or electronically via the Media Bureau's Consolidated Data Base System, *http://svartifoss2.fcc.gov/prod/cdbs/pubacc/prod/cdbs_pa.htm.*

Federal Communications Commission.

James D. Bradshaw,

Deputy Chief, Audio Division Media Bureau.

[FR Doc. 2015–13999 Filed 6–8–15; 8:45 am]

BILLING CODE 6712–01–P

FEDERAL COMMUNICATIONS COMMISSION

[OMB 3060–0349]

Information Collection Being Reviewed by the Federal Communications Commission

AGENCY: Federal Communications Commission.

ACTION: Notice and request for comments.

SUMMARY: As part of its continuing effort to reduce paperwork burdens, and as required by the Paperwork Reduction Act (PRA) of 1995 (44 U.S.C. 3501–3520), the Federal Communications Commission (FCC or Commission) invites the general public and other Federal agencies to take this opportunity to comment on the following information collections. Comments are requested concerning: Whether the proposed collection of information is necessary for the proper performance of the functions of the Commission, including whether the information shall have practical utility; the accuracy of the Commission's burden estimate; ways to enhance the quality, utility, and clarity of the information collected; ways to minimize the burden of the collection of information on the respondents, including the use of automated collection techniques or other forms of information technology; and ways to further reduce the information collection burden on small business concerns with fewer than 25 employees.

The FCC may not conduct or sponsor a collection of information unless it displays a currently valid OMB control number. No person shall be subject to any penalty for failing to comply with a collection of information subject to the PRA that does not display a valid OMB control number.

DATES: Written PRA comments should be submitted on or before August 10,

2015. If you anticipate that you will be submitting comments, but find it difficult to do so within the period of time allowed by this notice, you should advise the contact listed below as soon as possible.

ADDRESSES: Direct all PRA comments to Cathy Williams, FCC, via email to *PRA@fcc.gov* and to *Cathy.Williams@fcc.gov*.

FOR FURTHER INFORMATION CONTACT: For additional information about the information collection, contact Cathy Williams at (202) 418–2918.

SUPPLEMENTARY INFORMATION:

OMB Control Number: 3060–0349.

Title: Equal Employment Opportunity (''EEO'') Policy, Sections 73.2080, 76.73, 76.75, 76.79 and 76.1702.

Form Number: N/A.

Type of Review: Extension of a currently approved collection.

Respondents: Business or other for-profit entities; Not-for-profit institutions.

Number of Respondents and Responses: 14,178 respondents and 14,178 responses.

Estimated Time per Response: 42 hours.

Frequency of Response: Recordkeeping requirement; Annual and five-year reporting requirements.

Obligation to Respond: Required to obtain or retain benefits. Statutory authority for this information collection is contained in 47 CFR 154(i) and 303 of the Communications Act of 1934, as amended.

Total Annual Burden: 595,476 hours.

Total Annual Costs: None.

Privacy Impact Assessment(s): No impacts.

Nature and Extent of Confidentiality: There is no need for confidentiality and respondents are not being asked to submit confidential information to the Commission.

Needs and Uses: Section 73.2080 provides that equal opportunity in employment shall be afforded by all broadcast stations to all qualified persons and no person shall be discriminated against in employment by such stations because of race, color, religion, national origin or sex.

Section 73.2080 requires that each broadcast station employment unit with 5 or more full-time employees shall establish, maintain and carry out a program to assure equal opportunity in every aspect of a broadcast station's policy and practice.

Section 76.73 provides that equal opportunity in employment shall be afforded by all multichannel video program distributors (''MVPD'') to all qualified persons and no person shall be discriminated against in employment by such entities because of race, color, religion, national origin, age or sex.

Section 76.75 requires that each MVPD employment unit shall establish, maintain and carry out a program to assure equal opportunity in every aspect of an MVPD entity's policy and practice.

Section 76.79 requires that every MVPD employment unit maintain, for public inspection, a file containing copies of all annual employment reports and related documents.

Section 76.1702 requires that every MVPD place certain information concerning its EEO program in the public inspection file and on its Web site if it has a Web site.

Federal Communications Commission.

Gloria J. Miles,

Federal Register Liaison Officer, Office of the Secretary.

[FR Doc. 2015–14071 Filed 6–8–15; 8:45 am]

BILLING CODE 6712–01–P

BOARD OF GOVERNORS OF THE FEDERAL RESERVE SYSTEM

DEPARTMENT OF THE TREASURY

Agency Information Collection Activities; Renewal of a Currently Approved Collection; Comment Request; Prohibition on Funding of Unlawful Internet Gambling

AGENCY: Board of Governors of the Federal Reserve System (''Board'') and Departmental Offices, Department of the Treasury (''Treasury'') (collectively, the ''Agencies'').

ACTION: Joint notice and request for comment.

SUMMARY: The Agencies are soliciting comments concerning the currently approved recordkeeping requirements associated with a joint rule, which is being renewed without change, implementing the Unlawful Internet Gambling Enforcement Act of 2006 (the ''Act''). This notice is published jointly by the Agencies as part of their continuing effort to reduce paperwork and respondent burden. The public and other Federal agencies are invited to take this opportunity to comment on this information collection, as required by the Paperwork Reduction Act of 1995, Public Law 104–13 (44 U.S.C. 3506(c)(2)(A)).

DATES: Comments must be submitted on or before August 10, 2015.

ADDRESSES: Interested parties are invited to submit written comments to either or both of the Agencies. All comments, which should refer to the Office of Management and Budget (OMB) control numbers, will be shared between the Agencies. Direct all written comments as follows:

Board: You may submit comments, identified by OMB control no. *7100–0317,* by any of the following methods:

- *Agency Web site: http://www.federalreserve.gov.* Follow the instructions for submitting comments at *http://www.federalreserve.gov/apps/foia/proposedregs.aspx.*
- *Federal E-Rulemaking Portal: http://www.regulations.gov.* Follow the instructions for submitting comments.
- *Email: regs.comments@federalreserve.gov.* Include docket number in the subject line of the message.
- *FAX:* 202/452–3819 or 202/452–3102.
- *Mail:* Robert deV Frierson, Secretary, Board of Governors of the Federal Reserve System, 20th Street and Constitution Avenue NW., Washington, DC 20551.

All public comments are available from the Board's Web site at *http://www.federalreserve.gov/apps/foia/proposedregs.aspx* as submitted, unless modified for technical reasons. Accordingly, your comments will not be edited to remove any identifying or contact information. Public comments may also be viewed electronically or in paper form in Room MP–500 of the Board's Martin Building (20th and C Streets NW.) between 9:00 a.m. and 5:00 p.m. on weekdays.

Treasury: You may submit comments, identified by OMB control no. *1505–0204,* by regular mail to Martha Chacon, Staff Assistant, U.S. Department of the Treasury, 1500 Pennsylvania Avenue NW., Room 2000, Washington, DC 20220. In addition, comments may be sent by fax to (202) 622–1974, or by electronic mail to *Martha.Chacon-Ospina@treasury.gov.* In general, the Treasury will make all comments available in their original format, including any business or personal information provided such as names, addresses, email addresses, or telephone numbers, for public inspection and copying in the Treasury library, 1500 Pennsylvania Avenue NW., Washington, DC 20220, on official business days between the hours of 10 a.m. and 5 p.m. You can make an appointment to inspect comments by calling (202) 622–0990. All comments received, including attachments and other supporting materials, are part of the public record and subject to public disclosure. You should only submit comments that you wish to make publicly available.

Additionally, commenters should send a copy of their comments to the OMB desk officer for the Agencies by

mail to the Office of Information and Regulatory Affairs, Office of Management and Budget, New Executive Office Building, Room 10235 725 17th Street NW., Paperwork Reduction Project (1505–0204 for Treasury or 7100–0317 for the Board), Washington, DC 20503 or by fax to 202–395–6974.

FOR FURTHER INFORMATION CONTACT: Requests for additional information or a copy of the collection may be obtained by contacting:

Board: Federal Reserve Board Acting Clearance Officer—Mark Tokarski—Office of the Chief Data Officer, Board of Governors of the Federal Reserve System, Washington, DC 20551 (202) 452–3829. Telecommunications Device for the Deaf (TDD) users may contact (202) 263–4869, Board of Governors of the Federal Reserve System, Washington, DC 20551.

Treasury: Steven D. Laughton, Deputy Assistant General Counsel (Banking and Finance), (202) 622–8413, U.S. Department of the Treasury, 1500 Pennsylvania Avenue NW., Room 2001, Washington, DC 20220.

SUPPLEMENTARY INFORMATION:

Request for Comment on Information Collection

The public is invited to submit comments concerning:

a. Whether the proposed collection of information is necessary for the proper performance of the Agencies' functions; including whether the information has practical utility;

b. The accuracy of the Agencies' estimate of the burden of the proposed information collection, including the validity of the methodology and assumptions used;

c. Ways to enhance the quality, utility, and clarity of the information to be collected;

d. Ways to minimize the burden of information collection on respondents, including through the use of automated collection techniques or other forms of information technology; and

e. Estimates of capital or start up costs and costs of operation, maintenance, and purchase of services to provide information.

Comments submitted in response to this notice will be shared between the Agencies. All comments received, including attachments and other supporting materials, are part of the public record and will be included in the submission to the Office of Management and Budget (OMB).

Title: Prohibition on Funding of Unlawful Internet Gambling.

OMB Control Numbers:

Board: 7100–0317.

Treasury: 1505–0204.

Abstract: On November 18, 2008, the Agencies published a joint notice of final rulemaking in the **Federal Register** (73 FR 69382) adopting a rule on a prohibition on the funding of unlawful Internet gambling pursuant to the Act. Identical sets of the final joint rule with identically numbered sections were adopted by the Board and the Treasury within their respective titles of the Code of Federal Regulations (12 CFR part 233 for the Board and 31 CFR part 132 for the Treasury). The compliance date for the joint rule was June 1, 2010 (74 FR 62687). The collection of information is set out in sections 5 and 6 of the joint rule.[1] Section 5 of the joint rule, as required by the Act, requires all non-exempt participants in designated payment systems to establish and implement written policies and procedures reasonably designed to identify and block or otherwise prevent or prohibit transactions in connection with unlawful Internet gambling.[2] Section 6 of the joint rule provides non-exclusive examples of policies and procedures deemed by the Agencies to be reasonably designed to identify and block or otherwise prevent or prohibit transactions restricted by the Act.

Type of Review: Extension of a currently approved collection.

Affected Public: Businesses or other for-profit and not-for-profit organizations.

Respondent burden: For the purpose of estimating burden and accounting for it with OMB, the total number of depository institutions listed for each Agency includes the number of entities regulated by the Agency and half of the remaining depository institutions and third-party processors. Each Agency is also accounting for the burden for half of the card system operators and money transmitting business operators to which the Agencies estimate the final rule applies.

Board:

Estimated number of recordkeepers: 3,039 depository institutions, 3,170 credit unions, 7 card system operators, 10 money transmitting business operators, and 3 new or de novo institutions.

Estimated average annual burden hours per recordkeeper: Ongoing annual burden of 8 hours per recordkeeper for depository institutions, credit unions, card system operators, and money transmitting business operators. One-time burden of 100 hours for new or de novo institutions.

Estimated frequency: Annually.

Estimated total annual recordkeeping burden: Ongoing burden, 49,808 hours and one-time burden, 300 hours.

Treasury:

Estimated number of recordkeepers: 3,748 depository institutions, 3,170 credit unions, 7 card system operators, 10 money transmitting business operators, and 3 new or de novo institutions.

Estimated average annual burden hours per recordkeeper: Ongoing annual burden of 8 hours per recordkeeper for depository institutions, credit unions, card system operators, and money transmitting business operators. One-time burden of 100 hours for new or de novo institutions.

Estimated frequency: Annually.

Estimated total annual recordkeeping burden: Ongoing burden, 55,480 hours and one-time burden, 300 hours.

The Agencies may not conduct or sponsor, and a person is not required to respond to, a collection of information unless the collection of information displays a valid OMB control number.

By the Board of Governors of the Federal Reserve System on May 27, 2015.

Robert deV Frierson,

Secretary of the Board.

Dated: May 28, 2015.

By the Department of the Treasury.

Dawn D. Wolfgang,

Treasury PRA Clearance Officer.

[FR Doc. 2015–14104 Filed 6–8–15; 8:45 am]

BILLING CODE 6210–01–P; 4810–25–P

[1] Section 802 of the Act requires the Agencies to prescribe joint regulations requiring each designated payment system, and all participants in such systems, to identify and block or otherwise prevent or prohibit restricted transactions through the establishment of policies and procedures reasonably designed to identify and block or otherwise prevent or prohibit the acceptance of restricted transactions. 31 U.S.C. 5364(a). Section 802 also requires the Agencies to include in the joint rule non-exclusive examples of reasonably designed policies and procedures. 31 U.S.C. 5364(b).

[2] 12 CFR 233.5 and 233.6; and 31 CFR 132.5 and 132.6.

FEDERAL RESERVE SYSTEM

Formations of, Acquisitions by, and Mergers of Bank Holding Companies

The companies listed in this notice have applied to the Board for approval, pursuant to the Bank Holding Company Act of 1956 (12 U.S.C. 1841 *et seq.*) (BHC Act), Regulation Y (12 CFR part 225), and all other applicable statutes and regulations to become a bank holding company and/or to acquire the assets or the ownership of, control of, or the power to vote shares of a bank or bank holding company and all of the banks and nonbanking companies

owned by the bank holding company, including the companies listed below.

The applications listed below, as well as other related filings required by the Board, are available for immediate inspection at the Federal Reserve Bank indicated. The applications will also be available for inspection at the offices of the Board of Governors. Interested persons may express their views in writing on the standards enumerated in the BHC Act (12 U.S.C. 1842(c)). If the proposal also involves the acquisition of a nonbanking company, the review also includes whether the acquisition of the nonbanking company complies with the standards in section 4 of the BHC Act (12 U.S.C. 1843). Unless otherwise noted, nonbanking activities will be conducted throughout the United States.

Unless otherwise noted, comments regarding each of these applications must be received at the Reserve Bank indicated or the offices of the Board of Governors not later than July 3, 2015.

A. Federal Reserve Bank of Kansas City (Dennis Denney, Assistant Vice President) 1 Memorial Drive, Kansas City, Missouri 64198–0001:

1. *National Bank Holdings Corporation,* through its subsidiary, NBH Colorado Corporation, both in Greenwood Village, Colorado; to merge with Pine River Bank Corporation, and thereby indirectly acquire Pine River Valley Bank, both in Bayfield, Colorado. Immediately thereafter, NBH Colorado Corporation will merge into National Bank Holdings Corporation. In addition, NBH Colorado Corporation, Greenwood Village, Colorado, also has applied to become a bank holding company.

Board of Governors of the Federal Reserve System, June 4, 2015.

Margaret McCloskey Shanks,

Deputy Secretary of the Board.

[FR Doc. 2015–14075 Filed 6–8–15; 8:45 am]

BILLING CODE 6210–01–P

GENERAL SERVICES ADMINISTRATION

[OMB Control No. 3090–0287; Docket 2015–0001; Sequence 10]

Office of Mission Assurance; Information Collection; Background Investigations for Child Care Workers

AGENCY: Office of Mission Assurance, General Services Administration (GSA).

ACTION: Notice of request for comments regarding an existing OMB information collection.

SUMMARY: Under the provisions of the Paperwork Reduction Act, the Regulatory Secretariat Division will be submitting to the Office of Management and Budget (OMB) a request to review and approve a previously approved information collection requirement regarding the collection of personal data for background investigations for child care workers accessing GSA owned and leased controlled facilities.

DATES: Submit comments on or before: August 10, 2015.

ADDRESSES: Submit comments identified by Information Collection 3090–0287, Background Investigations for Child Care Workers by any of the following methods:

• *Regulations.gov: http://www.regulations.gov.* Submit comments via the Federal eRulemaking portal by searching the OMB control number. Select the link ''Submit a Comment'' that corresponds with ''Information Collection 3090–0287, Background Investigations for Child Care Workers''. Follow the instructions provided at the ''Submit a Comment'' screen. Please include your name, company name (if any), and ''Information Collection 3090–0287, Background Investigations for Child Care Workers'' on your attached document.

• *Mail:* General Services Administration, Regulatory Secretariat Division (MVCB), 1800 F Street NW., Washington, DC 20405. ATTN: Ms. Flowers/IC 3090–0287, Background Investigations for Child Care Workers.

Instructions: Please submit comments only and cite Information Collection 3090–0287, Background Investigations for Child Care Workers, in all correspondence related to this collection. All comments received will be posted without change to *http://www.regulations.gov,* including any personal and/or business confidential information provided.

FOR FURTHER INFORMATION CONTACT: Mr. Douglas Baker, Chief Security Officer, Office of Mission Assurance, GSA by telephone at 202–684–5005 or email at *douglas.baker@gsa.gov.*

SUPPLEMENTARY INFORMATION:

A. Purpose

Homeland Security Presidential Directive (HSPD) 12 ''Policy for a Common Identification Standard for Federal Employees and Contractors'' requires the implementation of a governmentwide standard for secure and reliable forms of identification for Federal employees and contractors. OMB's implementing instructions requires all contract employees requiring routine access to federally controlled facilities for greater than six (6) months to receive a background investigation. The minimum background investigation is the National Agency Check with Written Inquiries or NACI and the Office of Personnel Management offers a childcare NACI (CNACI).

However, there is no requirement in the law or HSPD–12 that requires child care employees to be subject to the NACI/CNACI since employees of child care providers are neither government employees nor government contractors. The child care providers are required to complete the criminal history background checks mandated in the Crime Control Act of 1990, Public Law 101–647, dated November 29, 1990, as amended by Public Law 102–190, dated December 5, 1991. These statutes require that each employee of a child care center located in a Federal building or in leased space must undergo a background check.

According to GSA policy, child care workers (as described above) will need to submit the following:

1. An original signed copy of a *Basic National Agency Check Criminal History,* GSA Form 176; and

2. Two sets of fingerprints on FBI Fingerprint Cards, for FD–87 and/or electronic prints from an enrollment center.

3. Electronically submit the e-qip (SF85) application for completion of the CNACI.

This is not a request to collect new information; this is a request to change the form that is currently being used to collect this information. The new GSA forms will be less of a public burden.

B. Annual Reporting Burden

Respondents: 1,200.
Responses per Respondent: 1.
Hours per Response: 1.
Total Burden Hours: 1,200.

C. Public Comments

Public comments are particularly invited on: Whether this collection of information is necessary and whether it will have practical utility; whether our estimate of the public burden of this collection of information is accurate, and based on valid assumptions and methodology; ways to enhance the quality, utility, and clarity of the information to be collected.

Obtaining Copies of Proposals: Requesters may obtain a copy of the information collection documents from the General Services Administration, Regulatory Secretariat Division (MVCB), 1800 F Street NW., Washington, DC 20405, telephone 202–501–4755. Please cite Background Investigations for Child Care Workers, in all correspondence.

Dated: June 3, 2015.

David A. Shive,

Acting Chief Information Officer.

[FR Doc. 2015–13995 Filed 6–8–15; 8:45 am]

BILLING CODE 6820–23–P

GOVERNMENT ACCOUNTABILITY OFFICE

Physician-focused Payment Model Technical Advisory Committee Nomination Letters

AGENCY: Government Accountability Office (GAO).

ACTION: Notice on letters of nomination of candidates.

SUMMARY: The Medicare Access and CHIP Reauthorization Act of 2015 established the Physician-Focused Payment Model Technical Advisory Committee to provide comments and recommendations to the Secretary of Health and Human Services on physician payment models, and gave the Comptroller General responsibility for appointing the committee's 11 members. The Advisory Committee members shall include individuals with national recognition for their expertise in physician-focused payment models and related delivery of care. No more than 5 members of the Committee shall be providers of services or suppliers, or representatives of providers of services or suppliers. A member of the committee shall not be an employee of the federal government.

GAO is accepting nominations of individuals for this committee. For appointments to be made in October 2015, I am announcing the following: Letters of nomination and resumes should be submitted by July 22, 2015 to ensure adequate opportunity for review and consideration of nominees. Acknowledgement of submissions will be provided within two weeks of submission. Please contact Mary Giffin at (202) 512–3710 if you do not receive an acknowledgement.

ADDRESSES: *Email: PTACcommittee@gao.gov.*

Mail: ATTN: PTAC Appointments, U.S. GAO, 441 G Street NW., Washington, DC 20548.

FOR MORE INFORMATION CONTACT: GAO Office of Public Affairs, (202) 512–4800.

Authority: Pub. L. 114–10, § 101(e), 129 Stat. 87, 115 (2015).

Gene L. Dodaro,

Comptroller General of the United States.

[FR Doc. 2015–13983 Filed 6–8–15; 8:45 am]

BILLING CODE 1610–02–M

DEPARTMENT OF HEALTH AND HUMAN SERVICES

Centers for Disease Control and Prevention

[60-Day 15–15ANC; Docket No. CDC–2015–0044]

Proposed Data Collection Submitted for Public Comment and Recommendations

AGENCY: Centers for Disease Control and Prevention (CDC), Department of Health and Human Services (HHS).

ACTION: Notice with comment period.

SUMMARY: The Centers for Disease Control and Prevention (CDC), as part of its continuing efforts to reduce public burden and maximize the utility of government information, invites the general public and other Federal agencies to take this opportunity to comment on proposed and/or continuing information collections, as required by the Paperwork Reduction Act of 1995. This notice invites comment on a newly proposed information collection entitled ''Formative and Summative Evaluation of the National Diabetes Prevention Program''. Mixed methods will be used to describe program performance.

DATES: Written comments must be received on or before August 10, 2015.

ADDRESSES: You may submit comments, identified by Docket No. CDC–2015–0044 by any of the following methods: Federal eRulemaking Portal: *Regulation.gov.* Follow the instructions for submitting comments.

Mail: Leroy A. Richardson, Information Collection Review Office, Centers for Disease Control and Prevention, 1600 Clifton Road NE., MS–D74, Atlanta, Georgia 30329.

Instructions: All submissions received must include the agency name and Docket Number. All relevant comments received will be posted without change to *Regulations.gov,* including any personal information provided. For access to the docket to read background documents or comments received, go to *Regulations.gov.*

Please note: *All public comment should be submitted through the Federal eRulemaking portal (Regulations.gov) or by U.S. mail to the address listed above.*

FOR FURTHER INFORMATION CONTACT: To request more information on the proposed project or to obtain a copy of the information collection plan and instruments, contact the Information Collection Review Office, Centers for Disease Control and Prevention, 1600 Clifton Road NE., MS–D74, Atlanta, Georgia 30329; phone: 404–639–7570; Email: *omb@cdc.gov.*

SUPPLEMENTARY INFORMATION: Under the Paperwork Reduction Act of 1995 (PRA) (44 U.S.C. 3501–3520), Federal agencies must obtain approval from the Office of Management and Budget (OMB) for each collection of information they conduct or sponsor. In addition, the PRA also requires Federal agencies to provide a 60-day notice in the **Federal Register** concerning each proposed collection of information, including each new proposed collection, each proposed extension of existing collection of information, and each reinstatement of previously approved information collection before submitting the collection to OMB for approval. To comply with this requirement, we are publishing this notice of a proposed data collection as described below. Comments are invited on: (a) Whether the proposed collection of information is necessary for the proper performance of the functions of the agency, including whether the information shall have practical utility; (b) the accuracy of the agency's estimate of the burden of the proposed collection of information; (c) ways to enhance the quality, utility, and clarity of the information to be collected; (d) ways to minimize the burden of the collection of information on respondents, including through the use of automated collection techniques or other forms of information technology; and (e) estimates of capital or start-up costs and costs of operation, maintenance, and purchase of services to provide information. Burden means the total time, effort, or financial resources expended by persons to generate, maintain, retain, disclose or provide information to or for a Federal agency. This includes the time needed to review instructions; to develop, acquire, install and utilize technology and systems for the purpose of collecting, validating and verifying information, processing and maintaining information, and disclosing and providing information; to train personnel and to be able to respond to a collection of information, to search data sources, to complete and review the collection of information; and to transmit or otherwise disclose the information.

Proposed Project

Formative and Summative Evaluation of the National Diabetes Prevention Program—New—National Center for Chronic Disease Prevention and Health Promotion (NCCDPHP), Centers for Disease Control and Prevention (CDC).

Background and Brief Description

Diabetes takes a significant toll on the public's health and, subsequently, our nation's health care system. In addition to 29.1 million people in the U.S. population diagnosed with diabetes, CDC estimates that 86 million adults aged 20 or older have prediabetes. Evidence-based lifestyle change programs have proven effective for preventing or delaying the onset of type 2 diabetes. However, several challenges must be addressed to achieve large-scale adoption and implementation of evidence-based lifestyle change programs. Implementation barriers include creating a shared vision among inherently different organizations, managing costs, managing variations in the quality of interventions, and training and appropriate referral of those at risk to lifestyle change programs.

In response to these challenges, CDC led the development of the National Diabetes Prevention Program (National DPP), a lifestyle change program aimed to increase knowledge and awareness of healthy eating and activities among people at-risk for diabetes. The National DPP funded six grantees to establish and expand ''a network of structured, evidence-based lifestyle change programs designed to prevent type 2 diabetes among people at high risk.'' Grantees are responsible for sustaining and scaling up the National DPP, which involves establishing evidence-based lifestyle change programs in multiple states and building a system to strategically recruit participants at high risk for diabetes.

As a central component of the National DPP, grantees promote sites' participation in the CDC's Diabetes Prevention Recognition Program (DPRP). The DPRP recognizes organizations that demonstrate effective delivery of proven type 2 diabetes prevention lifestyle interventions. To sustain the programs beyond the funding period, grantees are responsible for

- gaining concrete support for delivery sites from insurance companies in the form of reimbursement, and
- developping delivery sites' capacity to obtain and maintain DPRP recognition, and
- actively educating employers and insurance companies on the cost savings of including the lifestyle change program as a covered health benefit and reimbursing delivery sites on a pay-for-performance basis.

The National DPP has the potential for increasing the availability and reach of lifestyle change programs for those at risk for type 2 diabetes, improving the quality of programs and resources offered, and creating sustainable changes in how third-party payers offer and reimburse for programs to ensure that they are available to individuals regardless of their ability to pay.

CDC plans to collect information needed to evaluate the role of program-level factors on the effectiveness of National DPP efforts and to identify best practices. The best practices will draw from many different implementation strategies and take into account the barriers that arise in a variety of different delivery settings. Specifically, this assessment will reveal the impact of recruitment strategies and delivery models on factors such as reaching targeted demographics and participant completion rates. As a result of the assessment, the successes and challenges experienced by all programs can be used by other organizations to sustain and increase the effectiveness of their own lifestyle change programs. This information is necessary for translating the National DPP into various settings nationwide.

CDC plans to distribute an assessment tool (spreadsheet) to all six grantees, who will, in turn, disseminate the tool to their partner organizations across 23 states and 2 tribes and tribal organizations. The spreadsheets are a means for grantees and intervention sites to report on program components and progress. Grantees are responsible for completing their specific data collection spreadsheet and for distributing the spreadsheets to their interventions sites. Each grantee will collect information from its intervention sites, collate the site-specific spreadsheet reports into an aggregate grantee report, and submit the aggregate spreadsheet report to the CDC.

Program coordinators at each intervention site will be asked to describe their intervention, identify barriers and facilitators to implementation, and identify resources used to hold the lifestyle change classes. The estimated burden per response is 30 minutes. Project directors at the grantee level will be asked similar questions about resource use and implementation strategies, but will also be asked to discuss elements related to the reach of their National DPP programs. The estimated burden per response for a grantee is 8 hours.

CDC will use the information to investigate how to (1) expand the reach and sustainability of the National DPP program, (2) ensure the quality of the program as it is offered within communities, (3) increase referrals, and (4) secure sustained commitment among insurance providers to reimburse organizations providing the program so it is accessible to individuals most in need of this intervention. Finally, CDC will use the information to inform the development of data-driven technical assistance for National DPP grantees and their intervention sites.

OMB approval is requested for three years, in which there will be two waves of information collection. Wave one will include 110 NDPP Intervention Sites and 6 NDPP Grantees, and wave two will include 120 NDPP Intervention Sites and 6 NDPP Grantees. Over the three-year clearance period, the total burden estimate is based on 73 annualized responses from NDPP Intervention Sites (110 + 120/3) and 4 annualized responses from NDPP Grantees (6 + 6/3).

Participation is voluntary and there are no costs to respondents other than their time.

ESTIMATED ANNUALIZED BURDEN HOURS

Type of respondents	Form name	Number of respondents	Number of responses per respondent	Average burden per response (in hrs.)	Total burden (in hrs.)
NDPP Intervention Sites	Spreadsheet for NDPP Intervention Sites.	73	1	30/60	37
NDPP FOA Grantees	Spreadsheet for NDPP Grantees	4	1	8	32
Total					69

Leroy A. Richardson,

Chief, Information Collection Review Office, Office of Scientific Integrity, Office of the Associate Director for Science, Office of the Director, Centers for Disease Control and Prevention.

[FR Doc. 2015–13955 Filed 6–8–15; 8:45 am]

BILLING CODE 4163–18–P

DEPARTMENT OF HEALTH AND HUMAN SERVICES

Administration for Children and Families

Submission for OMB Review; Comment Request

Title: National Child Abuse and Neglect Data System

OMB No.: 0970–0424.

Description: The Administration on Children, Youth and Families in the U.S. Department of Health and Human Services (HHS) established the National Child Abuse and Neglect Data System (NCANDS) to respond to the 1988 and 1992 amendments (P.L. 100–294 and P.L. 102–295) to the Child Abuse Prevention and Treatment Act (42 U.S.C. 5101 *et seq.*), which called for the creation of a coordinated national data collection and analysis program, both universal and case specific in scope, to examine standardized data on false, unfounded, or unsubstantiated reports.

In 1996, the Child Abuse Prevention and Treatment Act was amended by Public Law 104–235 to require that any state receiving the Basic State Grant work with the Secretary of the Department of Health and Human Services (HHS) to provide specific data on child maltreatment, to the extent practicable. These provisions were retained and expanded upon in the 2010 reauthorization of CAPTA (Pub. L. 111–320).

Each state to which a grant is made under this section shall annually work with the Secretary to provide, to the maximum extent practicable, a report that includes the following:

1. The number of children who were reported to the state during the year as victims of child abuse or neglect.

2. Of the number of children described in paragraph (1), the number with respect to whom such reports were—

A. substantiated;

B. unsubstantiated; or

C. determined to be false.

3. Of the number of children described in paragraph (2)—

A. the number that did not receive services during the year under the state program funded under this section or an equivalent state program;

B. the number that received services during the year under the state program funded under this section or an equivalent state program; and

C. the number that were removed from their families during the year by disposition of the case.

4. The number of families that received preventive services, including use of differential response, from the state during the year.

5. The number of deaths in the state during the year resulting from child abuse or neglect.

6. Of the number of children described in paragraph (5), the number of such children who were in foster care.

7. A. The number of child protective service personnel responsible for the—

i. intake of reports filed in the previous year;

ii. screening of such reports;

iii. assessment of such reports; and

iv. investigation of such reports.

B. The average caseload for the workers described in subparagraph (A).

8. The agency response time with respect to each such report with respect to initial investigation of reports of child abuse or neglect.

9. The response time with respect to the provision of services to families and children where an allegation of child abuse or neglect has been made.

10. For child protective service personnel responsible for intake, screening, assessment, and investigation of child abuse and neglect reports in the state—

A. information on the education, qualifications, and training requirements established by the state for child protective service professionals, including for entry and advancement in the profession, including advancement to supervisory positions;

B. data of the education, qualifications, and training of such personnel;

C. demographic information of the child protective service personnel; and

D. information on caseload or workload requirements for such personnel, including requirements for average number and maximum number of cases per child protective service worker and supervisor.

11. The number of children reunited with their families or receiving family preservation services that, within five years, result in subsequent substantiated reports of child abuse or neglect, including the death of the child.

12. The number of children for whom individuals were appointed by the court to represent the best interests of such children and the average number of out of court contacts between such individuals and children.

13. The annual report containing the summary of activities of the citizen review panels of the state required by subsection (c)(6).

14. The number of children under the care of the state child protection system who are transferred into the custody of the state juvenile justice system.

15. The number of children referred to a child protective services system under subsection (b)(2)(B)(ii).

16. The number of children determined to be eligible for referral, and the number of children referred, under subsection (b)(2)(B)(xxi), to agencies providing early intervention services under part C of the Individuals with Disabilities Education Act (20 U.S.C. 1431 *et seq.*).

The Children's Bureau proposes to continue collecting the NCANDS data through the two files of the Detailed Case Data Component, the Child File (the case-level component of NCANDS) and the Agency File (additional aggregate data, which cannot be collected at the case level). Technical assistance will be provided so that all states may provide the Child File and Agency File data to NCANDS. There are no proposed changes to the NCANDS data collection instruments. New fields were implemented during the previous OMB clearance cycle in support of the CAPTA Reauthorization Act of 2010 and to improve reporting on federal performance measures.

Respondents: State governments, the District of Columbia, and the Commonwealth of Puerto Rico.

ANNUAL BURDEN ESTIMATES

Instrument	Number of respondents	Number of responses per respondent	Average burden hours per response	Total burden hours
Detailed Case Data Component: Child File and Agency File	52	1	82	4,264

Estimated Total Annual Burden Hours: 4,264.

Additional Information: Copies of the proposed collection may be obtained by writing to the Administration for Children and Families, Office of Planning, Research and Evaluation, 370 L'Enfant Promenade SW., Washington, DC 20447, Attn: ACF Reports Clearance Officer. All requests should be identified by the title of the information collection. Email address: *infocollection@acf.hhs.gov.*

OMB Comment: OMB is required to make a decision concerning the collection of information between 30 and 60 days after publication of this document in the **Federal Register**. Therefore, a comment is best assured of having its full effect if OMB receives it within 30 days of publication. Written comments and recommendations for the proposed information collection should be sent directly to the following:

Office of Management and Budget, Paperwork Reduction Project, Email: *OIRA_SUBMISSION@OMB.EOP.GOV,* Attn: Desk Officer for the Administration for Children and Families.

Robert Sargis,

Reports Clearance Officer.

[FR Doc. 2015–14060 Filed 6–8–15; 8:45 am]

BILLING CODE 4184–01–P

DEPARTMENT OF HEALTH AND HUMAN SERVICES

Administration for Children and Families

Submission for OMB Review; Comment Request

Title: Maternal and Infant Home Visiting Program Evaluation (MIHOPE) Check-in Project.

OMB No.: 0970–0402.

Description: The Administration for Children and Families (ACF), in partnership with the Health Resources and Services Administration (HRSA), both of the U.S. Department of Health and Human Services (HHS), is proposing a data collection activity as part of the Maternal and Infant Home Visiting Program Evaluation (MIHOPE) Check-in project. The purpose of the MIHOPE Check-in project is to maintain up-to-date contact information for families that participated in MIHOPE (the national evaluation of the Maternal, Infant, and Early Childhood Home Visiting program), so it is possible to conduct future follow-up studies and assess the potential long-term impact of the program. In addition to contact information, the MIHOPE Check-in project will also administer a brief survey on child and family outcomes.

Respondents: Adult participants in MIHOPE and adult primary caregivers of children who participated in MIHOPE.

ANNUAL BURDEN ESTIMATES

Instrument	Total number of respondents	Annualized number of respondents	Number of responses per respondent	Average burden hours per response	Total annual burden hours
Child and Family Outcome Survey and Updating Contact Information	4,300	1433	3	.50	2,150

Estimated Total Annual Burden Hours: 2150.

Additional Information: Copies of the proposed collection may be obtained by writing to the Administration for Children and Families, Office of Planning, Research and Evaluation, 370 L'Enfant Promenade SW., Washington, DC 20447, Attn: OPRE Reports Clearance Officer. All requests should be identified by the title of the information collection. Email address: *OPREinfocollection@acf.hhs.gov.*

OMB Comment: OMB is required to make a decision concerning the collection of information between 30 and 60 days after publication of this document in the **Federal Register**. Therefore, a comment is best assured of having its full effect if OMB receives it within 30 days of publication. Written comments and recommendations for the proposed information collection should be sent directly to the following: Office of Management and Budget, Paperwork Reduction Project, Email: *OIRA_SUBMISSION@OMB.E0P.GOV,* Attn: Desk Officer for the Administration for Children and Families.

Robert Sargis,

ACF Reports Clearance Officer.

[FR Doc. 2015–14034 Filed 6–8–15; 8:45 am]

BILLING CODE 4184–22–P

DEPARTMENT OF HEALTH AND HUMAN SERVICES

Administration for Community Living

Applications for New Awards; National Institute on Disability, Independent Living, and Rehabilitation Research—Advanced Rehabilitation Research Training Program

AGENCY: Administration for Community Living, Department of Health and Human Services.

ACTION: Notice.

Overview Information:

National Institute on Disability, Independent Living, and Rehabilitation Research (NIDILRR)—Advanced Rehabilitation Research Training (ARRT) Program—Advanced Rehabilitation Research Policy Fellowship.

Notice inviting applications for new awards for fiscal year (FY) 2015.

Catalog of Federal Domestic Assistance (CFDA) Number: 84.133P–5.

DATES: *Applications Available:* June 9, 2015.

Note: On July 22, 2014, President Obama signed the Workforce Innovation Opportunity Act (WIOA). WIOA was effective immediately. One provision of WIOA transferred the National Institute on Disability and Rehabilitation Research (NIDRR) from the Department of Education to the Administration for Community Living (ACL) in the Department of Health and Human Services. In addition, NIDRR's name was changed to the National Institute on Disability, Independent Living, and Rehabilitation Research (NIDILRR). For FY 2015, all NIDILRR priority notices will be published as ACL notices, and ACL will make all NIDILRR awards. During this transition period, however, NIDILRR will continue to review grant applications using Department of Education tools. NIDILRR will post previously-approved application kits to grants.gov, and NIDILRR applications submitted to grants.gov will be forwarded to the Department of Education's G–5 system for peer review.

We are using Department of Education application kits and peer review systems during this transition year in order to provide for a smooth and orderly process for our applicants.

Date of Pre-Application Meeting: July 1, 2015.

Deadline for Transmittal of Applications: August 10, 2015.

Full Text of Announcement

I. Funding Opportunity Description

Purpose of Program: The purpose of the Disability and Rehabilitation Research Projects and Centers Program is to plan and conduct research, demonstration projects, training, and related activities, including international activities, to develop methods, procedures, and rehabilitation technology. The Program's activities are designed to maximize the full inclusion and integration into society, employment, independent living, family support, and economic and social self-sufficiency of individuals with disabilities, especially individuals with the most severe disabilities, and to improve the effectiveness of services authorized under the Rehabilitation Act of 1973, as amended (Rehabilitation Act).

Advanced Rehabilitation Research Training Program

The purpose of NIDILRR's ARRT program, which is funded through the Disability and Rehabilitation Research Projects and Centers Program, is to provide advanced research training and experience to individuals with doctorates, or similar advanced degrees, who have clinical or other relevant experience. ARRT projects train rehabilitation researchers, including researchers with disabilities, with particular attention to research areas that support the implementation and objectives of the Rehabilitation Act, and that improve the effectiveness of services authorized under the Rehabilitation Act. Additional information on the ARRT program can be found at: *www.ed.gov/rschstat/research/pubs/res-program.html#ARRT.*

Absolute Priority:

For FY 2015 and any subsequent year in which we make awards from the list of unfunded applicants from this competition, this priority is an absolute priority. Under 45 CFR part 75 we consider only applications that meet this program priority.

This priority is:

Advanced Rehabilitation Research Policy Fellowship.

Note: This priority is from the notice of final priority for this program, published in the **Federal Register** on July 21, 2014 (79 FR 42400).

Program Authority: 29 U.S.C. 764(b)(2)(A).

Applicable Regulations: (a) The Department of Health and Human Services General Administrative Regulations in 45 CFR part 75 (b) Audit Requirements for Federal Awards in 45 CFR part 75 Subpart F; (c) 45 CFR part 75 Non-procurement Debarment and Suspension; (d) 45 CFR part 75 Requirement for Drug-Free Workplace (Financial Assistance); (e) The regulations for this program in 34 CFR part 350; (f) The notice of final priority for this program, published in the **Federal Register** on June 11, 2013 (78 FR 34901); and (g) The notice of final priorities and definitions, published in the **Federal Register** on July 21, 2014 (79 FR 42400).

II. Award Information

Type of Award: Discretionary grants.

Estimated Available Funds: $150,000.

Contingent upon the availability of funds and the quality of applications, we may make additional awards in FY 2015 and any subsequent year from the list of unfunded applicants from this competition.

Maximum Award: $150,000.

We will reject any application that proposes a budget exceeding $150,000 for a single budget period of 12 months. The Administrator of the Administration for Community Living may change the maximum amount through a notice published in the **Federal Register**.

Note: Consistent with 45 CFR part 75, indirect cost reimbursement for a training grant is limited to eight percent of a modified total direct cost base, defined as total direct costs less stipends, tuition and related fees, equipment, and the amount of each subaward in excess of $25,000. Indirect costs can also be determined in the grantee's negotiated indirect cost rate agreement if that amount is less than the amount calculated under the formula above.

Estimated Number of Awards: 1.

Note: The Department is not bound by any estimates in this notice.

Project Period: Up to 60 months.

III. Eligibility Information

1. *Eligible Applicants:* Institutions of Higher Education.

2. *Cost Sharing or Matching:* This program does not require cost sharing or matching.

IV. Application and Submission Information

1. *Address to Request Application Package:* You can obtain an application package via grants.gov, or by contacting Patricia Barrett: U.S. Department of Health and Human Services, 400 Maryland Avenue SW., Room 5142, PCP, Washington, DC 20202–2700. Telephone: (202) 245–6211 or by email: *patricia.barrett@ed.gov.*

If you request an application from Patricia Barrett, be sure to identify this program as follows: CFDA number 84.133P–5.

2. *Content and Form of Application Submission:* Requirements concerning the content of an application, together with the forms you must submit, are in the application package for this competition. Page Limit: The project narrative section of the application is where you, the applicant, address the selection criteria that reviewers use to evaluate your application. We recommend that you limit Part III to the equivalent of no more than 75 pages, using the following standards:

- A ''page'' is 8.5″ x 11″, on one side only, with 1″ margins at the top, bottom, and both sides.
- Double space (no more than three lines per vertical inch) all text in the application narrative. You are not required to double space titles, headings, footnotes, references, and captions, or text in charts, tables, figures, and graphs.
- Use a font that is either 12 point or larger or no smaller than 10 pitch (characters per inch).
- Use one of the following fonts: Times New Roman, Courier, Courier New, or Arial. An application submitted in any other font (including Times Roman or Arial Narrow) will not be accepted.

The recommended page limit only applies to the project narrative section of your application, which is uploaded to Grants.gov under the ''Project Narrative'' heading. It does not apply to the material you will upload under the other nine required Grants.gov heading, and one optional heading for ''other attachment Forms,'' which are listed in the Application package for Grants.gov, available at *www.ed.gov/fund/grant/apply/grantapps/index.html.*

Note 1: Please submit an appendix that lists every collaborating organization and individual named in the application, including staff, consultants, contractors, and advisory board members. We will use this information to help us screen for conflicts of interest with our reviewers.

Note 2: An applicant should consult NIDRR's Long-Range Plan for Fiscal Years 2013–2017 (78 FR 20299) (Plan) when preparing its application. The Plan is organized around the following research domains: (1) Community

Living and Participation; (2) Health and Function; and (3) Employment.

3. *Submission Dates and Times:*

Applications Available: June 9, 2015.

Date of Pre-Application Meeting: Interested parties are invited to participate in a pre-application meeting and to receive information and technical assistance through individual consultation with NIDILRR staff. The pre-application meeting will be held July 1, 2015. Interested parties may participate in this meeting by conference call with NIDILRR staff from the Administration for Community Living between 1:00 p.m. and 3:00 p.m., Washington, DC time. NIDILRR staff also will be available from 3:30 p.m. to 4:30 p.m., Washington, DC time, on the same day, by telephone, to provide information and technical assistance through individual consultation. For further information or to make arrangements to participate in the meeting via conference call or to arrange for an individual consultation, contact Carolyn Baron, U.S. Department of Health and Human Services, 550 12th Street SW., Room 5134, PCP, Washington, DC 20202; or by email to: *Carolyn.Baron@ed.gov*.

Deadline for Transmittal of Applications: August 10, 2015.

Applications for grants under this competition must be submitted electronically using the Grants.gov Apply site (Grants.gov). For information (including dates and times) about how to submit your application electronically, or in paper format by mail if you qualify for an exception to the electronic submission requirement, please refer to section IV.7. *Other Submission Requirements* of this notice.

We do not consider an application that does not comply with the deadline requirements.

Individuals with disabilities who need an accommodation or auxiliary aid in connection with the application process should contact the person listed under **FOR FURTHER INFORMATION CONTACT** in section VII of this notice. If the Department provides an accommodation or auxiliary aid to an individual with a disability in connection with the application process, the individual's application remains subject to all other requirements and limitations in this notice.

4. *Intergovernmental Review:* This program is not subject to Executive Order 12372.

5. *Funding Restrictions:* We reference regulations outlining funding restrictions in the *Applicable Regulations* section of this notice.

6. *Data Universal Numbering System Number, Taxpayer Identification Number, and System for Award Management:* To do business with the Department of Health and Human Services, you must—

a. Have a Data Universal Numbering System (DUNS) number and a Taxpayer Identification Number (TIN);

b. Register both your DUNS number and TIN with the System for Award Management (SAM) (formerly the Central Contractor Registry (CCR)), the Government's primary registrant database;

c. Provide your DUNS number and TIN on your application; and

d. Maintain an active SAM registration with current information while your application is under review by the Department and, if you are awarded a grant, during the project period.

You can obtain a DUNS number from Dun and Bradstreet. A DUNS number can be created within one to two business days.

If you are a corporate entity, agency, institution, or organization, you can obtain a TIN from the Internal Revenue Service. If you are an individual, you can obtain a TIN from the Internal Revenue Service or the Social Security Administration. If you need a new TIN, please allow two to five weeks for your TIN to become active.

The SAM registration process can take approximately seven business days, but may take upwards of several weeks, depending on the completeness and accuracy of the data entered into the SAM database by an entity. Thus, if you think you might want to apply for Federal financial assistance under a program administered by the Department, please allow sufficient time to obtain and register your DUNS number and TIN. We strongly recommend that you register early.

Note: Once your SAM registration is active, you will need to allow 24 to 48 hours for the information to be available in Grants.gov and before you can submit an application through Grants.gov.

If you are currently registered with SAM, you may not need to make any changes. However, please make certain that the TIN associated with your DUNS number is correct. Also note that you will need to update your registration annually. This may take three or more business days.

Information about SAM is available at *www.SAM.gov*. To further assist you with obtaining and registering your DUNS number and TIN in SAM or updating your existing SAM account, we have prepared a SAM.gov Tip Sheet, which you can find at: *http://www2.ed.gov/fund/grant/apply/sam-faqs.html*.

In addition, if you are submitting your application via Grants.gov, you must (1) be designated by your organization as an Authorized Organization Representative (AOR); and (2) register yourself with Grants.gov as an AOR. Details on these steps are outlined at the following Grants.gov Web page: *www.grants.gov/web/grants/register.html*.

7. *Other Submission Requirements:* Applications for grants under this competition must be submitted electronically unless you qualify for an exception to this requirement in accordance with the instructions in this section.

a. Electronic Submission of Applications.

Applications for grants under the Advanced Rehabilitation Research Policy Fellowship ARRT competition, CFDA Number 84.133P–5, must be submitted electronically using the Governmentwide Grants.gov Apply site at *www.Grants.gov*. Through this site, you will be able to download a copy of the application package, complete it offline, and then upload and submit your application. You may not email an electronic copy of a grant application to us.

We will reject your application if you submit it in paper format unless, as described elsewhere in this section, you qualify for one of the exceptions to the electronic submission requirement *and* submit, no later than two weeks before the application deadline date, a written statement to the Department that you qualify for one of these exceptions. Further information regarding calculation of the date that is two weeks before the application deadline date is provided later in this section under *Exception to Electronic Submission Requirement*.

You may access the electronic grant application for this ARRT competition at *www.Grants.gov*. You must search for the downloadable application package for this competition by the CFDA number. Do not include the CFDA number's alpha suffix in your search (*e.g.,* search for 84.133, not 84.133P).

Please note the following:

- When you enter the Grants.gov site, you will find information about submitting an application electronically through the site, as well as the hours of operation.
- Applications received by Grants.gov are date and time stamped. Your application must be fully uploaded and submitted and must be date and time stamped by the Grants.gov system no later than 4:30:00 p.m., Washington, DC time, on the application deadline date.

Except as otherwise noted in this section, we will not accept your application if it is received—that is, date and time stamped by the Grants.gov system—after 4:30:00 p.m., Washington, DC time, on the application deadline date. We do not consider an application that does not comply with the deadline requirements. When we retrieve your application from Grants.gov, we will notify you if we are rejecting your application because it was date and time stamped by the Grants.gov system after 4:30:00 p.m., Washington, DC time, on the application deadline date.

• The amount of time it can take to upload an application will vary depending on a variety of factors, including the size of the application and the speed of your Internet connection. Therefore, we strongly recommend that you do not wait until the application deadline date to begin the submission process through Grants.gov.

• You should review and follow the Education Submission Procedures for submitting an application through Grants.gov that are included in the application package for this competition to ensure that you submit your application in a timely manner to the Grants.gov system. You can also find the Education Submission Procedures pertaining to Grants.gov under News and Events on the Department's G5 system home page at *www.G5.gov*.

• You will not receive additional point value because you submit your application in electronic format, nor will we penalize you if you qualify for an exception to the electronic submission requirement, as described elsewhere in this section, and submit your application in paper format.

• You must submit all documents electronically, including all information you typically provide on the following forms: the Application for Federal Assistance (SF 424), the Department of Education Supplemental Information for SF 424, Budget Information—Non-Construction Programs (ED 524), and all necessary assurances and certifications.

• You must upload any narrative sections and all other attachments to your application as files in a PDF (Portable Document) read-only, non-modifiable format. Do not upload an interactive or fillable PDF file. If you upload a file type other than a read-only, non-modifiable PDF or submit a password-protected file, we will not review that material. Additional, detailed information on how to attach files is in the application instructions.

• Your electronic application must comply with any page-limit requirements described in this notice.

• After you electronically submit your application, you will receive from Grants.gov an automatic notification of receipt that contains a Grants.gov tracking number. (This notification indicates receipt by Grants.gov only, not receipt by the Department.) The Department then will retrieve your application from Grants.gov and send a second notification to you by email. This second notification indicates that the Department has received your application and has assigned your application a PR/Award number (an ED-specified identifying number unique to your application).

Application Deadline Date Extension in Case of Technical Issues with the Grants.gov System: If you are experiencing problems submitting your application through Grants.gov, please contact the Grants.gov Support Desk, toll free, at 1–800–518–4726. You must obtain a Grants.gov Support Desk Case Number and must keep a record of it.

If you are prevented from electronically submitting your application on the application deadline date because of technical problems with the Grants.gov system, we will grant you an extension until 4:30:00 p.m., Washington, DC time, the following business day to enable you to transmit your application electronically. You also may mail your application by following the mailing instructions described elsewhere in this notice.

If you submit an application after 4:30:00 p.m., Washington, DC time, on the application deadline date, please contact the person listed under **FOR FURTHER INFORMATION CONTACT** in section VII of this notice and provide an explanation of the technical problem you experienced with Grants.gov, along with the Grants.gov Support Desk Case Number. We will accept your application if we can confirm that a technical problem occurred with the Grants.gov system and that the problem affected your ability to submit your application by 4:30:00 p.m., Washington, DC time, on the application deadline date. The Department will contact you after a determination is made on whether your application will be accepted.

Note: The extensions to which we refer in this section apply only to the unavailability of, or technical problems with, the Grants.gov system. We will not grant you an extension if you failed to fully register to submit your application to Grants.gov before the application deadline date and time or if the technical problem you experienced is unrelated to the Grants.gov system.

Exception to Electronic Submission Requirement: You qualify for an exception to the electronic submission requirement, and may submit your application in paper format, if you are unable to submit an application through the Grants.gov system because—

• You do not have access to the Internet; or

• You do not have the capacity to upload large documents to the Grants.gov system;

and

• No later than two weeks before the application deadline date (14 calendar days or, if the fourteenth calendar day before the application deadline date falls on a Federal holiday, the next business day following the Federal holiday), you mail or fax a written statement to the Department, explaining which of the two grounds for an exception prevents you from using the Internet to submit your application.

If you mail your written statement to the Department, it must be postmarked no later than two weeks before the application deadline date. If you fax your written statement to the Department, we must receive the faxed statement no later than two weeks before the application deadline date.

Address and mail or fax your statement to: Patricia Barrett, U.S. Department of Health and Human Services, 400 Maryland Avenue SW., Room 5142, Potomac Center Plaza (PCP), Washington, DC 20202–2700. FAX: (202) 245–7323.

Your paper application must be submitted in accordance with the mail instructions described in this notice.

b. Submission of Paper Applications by Mail.

If you qualify for an exception to the electronic submission requirement, you may mail (through the U.S. Postal Service or a commercial carrier) your application to the Department. You must mail the original and two copies of your application, on or before the application deadline date, to the Department at the following address: U.S. Department of Education, Application Control Center, Attention: (CFDA Number 84.133P–5), LBJ Basement Level 1, 400 Maryland Avenue SW., Washington, DC 20202–4260.

You must show proof of mailing consisting of one of the following:

(1) A legibly dated U.S. Postal Service postmark.

(2) A legible mail receipt with the date of mailing stamped by the U.S. Postal Service.

(3) A dated shipping label, invoice, or receipt from a commercial carrier.

(4) Any other proof of mailing acceptable to the Administrator of the Administration for Community Living

of the U.S. Department of Health and Human Services.

If you mail your application through the U.S. Postal Service, we do not accept either of the following as proof of mailing:

(1) A private metered postmark.

(2) A mail receipt that is not dated by the U.S. Postal Service.

If your application is postmarked after the application deadline date, we will not consider your application.

Note: The U.S. Postal Service does not uniformly provide a dated postmark. Before relying on this method, you should check with your local post office.

Note for Mail Delivery of Paper Applications: If you mail your application to the Department—

(1) You must indicate on the envelope and—if not provided by the Department—in Item 11 of the SF 424 the CFDA number, including suffix letter, if any, of the competition under which you are submitting your application; and

(2) The Application Control Center will mail to you a notification of receipt of your grant application. If you do not receive this notification within 15 business days from the application deadline date, you should call the U.S. Department of Education Application Control Center at (202) 245–6288.

V. Application Review Information

1. *Selection Criteria:* The selection criteria for this competition are from 34 CFR 350.54 and are listed in the application package.

2. *Review and Selection Process:* Final award decisions will be made by the Administrator, ACL. In making these decisions, the Administrator will take into consideration: The ranking of the review panel; reviews for programmatic and grants management compliance; the reasonableness of the estimated cost to the government considering the available funding and anticipated results; and the likelihood that the proposed project will result in the benefits expected. Under Section 75.205, item (3) history of performance is an item that is reviewed. In addition, in making a competitive grant award, the Administrator of the Administration for Community Living also requires various assurances including those applicable to Federal civil rights laws that prohibit discrimination in programs or activities receiving Federal financial assistance from the Department of Health and Human Services 45 CFR part 75.

3. *Special Conditions:* Under 45 CFR part 75 the Administrator of the Administration for Community Living may impose special conditions on a grant if the applicant or grantee is not financially stable; has a history of unsatisfactory performance; has a financial or other management system that does not meet the standards in 45 CFR part 75, as applicable; has not fulfilled the conditions of a prior grant; or is otherwise not responsible.

VI. Award Administration Information

1. *Award Notices:* If your application is successful, we send you a Notice of Award (NOA) or we may send you an email containing a link to access an electronic version of your NOA. We may notify you informally, also.

If your application is not evaluated or not selected for funding, we notify you.

2. *Administrative and National Policy Requirements:* We identify administrative and national policy requirements in the application package and reference these and other requirements in the *Applicable Regulations* section of this notice.

We reference the regulations outlining the terms and conditions of an award in the *Applicable Regulations* section of this notice and include these and other specific conditions in the NOA. The NOA also incorporates your approved application as part of your binding commitments under the grant.

3. *Reporting:* (a) If you apply for a grant under this competition, you must ensure that you have in place the necessary processes and systems to comply with the reporting requirements in 45 CFR part 75 should you receive funding under the competition. This does not apply if you have an exception under 45 CFR part 75.

(b) At the end of your project period, you must submit a final performance report, including financial information, as directed by the Administrator of the Administration for Community Living. If you receive a multi-year award, you must submit an annual performance report that provides the most current performance and financial expenditure information as directed by the Administrator of the Administration for Community Living under 45 CFR part 75. All NIDILRR grantees will submit their annual and final reports through NIDILRR's online reporting system and as designated in the terms and conditions of your NOA. The Administrator of the Administration for Community Living may also require more frequent performance reports under 45 CFR part 75. For specific requirements on reporting, please go to *www.ed.gov/fund/grant/apply/grantapps/index.html.*

(c) FFATA and FSRS Reporting

The Federal Financial Accountability and Transparency Act (FFATA) requires data entry at the FFATA Subaward Reporting System (*http://www.FSRS.gov*) for all sub-awards and sub-contracts issued for $25,000 or more as well as addressing executive compensation for both grantee and sub-award organizations.

For further guidance please see the following link: *http://www.acl.gov/Funding_Opportunities/Grantee_Info/FFATA.aspx.*

If you receive a multi-year award, you must submit an annual performance report that provides the most current performance and financial expenditure information. Annual and Final Performance reports will be submitted through NIDILRR's online Performance System and as designated in the terms and conditions of your NOA. At the end of your project period, you must submit a final performance report, including financial information.

Note: NIDILRR will provide information by letter to successful grantees on how and when to submit the report.

4. *Performance Measures:* To evaluate the overall success of its research program, NIDILRR assesses the quality of its funded projects through a review of grantee performance and accomplishments. Performance measures for the ARRT program include—

- The percentage of NIDILRR-supported fellows, post-doctoral trainees, and doctoral students who publish results of NIDILRR-sponsored research in refereed journals.
- The average number of publications per award based on NIDILRR-funded research and development activities in refereed journals.

For these reviews, NIDILRR uses information submitted by grantees as part of its Annual Performance Reports.

5. *Continuation Awards:* In making a continuation award, the Administrator of the Administration for Community Living may consider, under 45 CFR part 75, the extent to which a grantee has made ''substantial progress toward meeting the objectives in its approved application.'' This consideration includes the review of a grantee's progress in meeting the targets and projected outcomes in its approved application, and whether the grantee has expended funds in a manner that is consistent with its approved application and budget. In making a continuation grant, the Administrator also considers whether the grantee is operating in compliance with the assurances in its approved application, including those applicable to Federal civil rights laws

that prohibit discrimination in programs or activities receiving Federal financial assistance from the Department. Continuation funding is also subject to availability of funds.

VII. Agency Contact

FOR FURTHER INFORMATION CONTACT: Patricia Barrett, U.S. Department of Health and Human Services, 400 Maryland Avenue SW., Room 5142, PCP, Washington, DC 20202–2700. Telephone: (202) 245–6211 or by email: *patricia.barrett@ed.gov.*

If you use a TDD or a TTY, call the Federal Relay Service (FRS), toll free, at 1–800–877–8339.

VIII. Other Information

Electronic Access to This Document: The official version of this document is the document published in the **Federal Register**. Free Internet access to the official edition of the **Federal Register** and the Code of Federal Regulations is available via the Federal Digital System at: *www.gpo.gov/fdsys.* At this site you can view this document, as well as all other documents of this Department published in the **Federal Register**, in text or Adobe Portable Document Format (PDF). To use PDF you must have Adobe Acrobat Reader, which is available free at the site.

You may also access documents of the Department published in the **Federal Register** by using the article search feature at: *www.federalregister.gov.* Specifically, through the advanced search feature at this site, you can limit your search to documents published by the Department.

Dated: June 3, 2015.

John Tschida,

Director, National Institute on Disability, Independent Living, and Rehabilitation Research.

[FR Doc. 2015–14054 Filed 6–8–15; 8:45 am]

BILLING CODE 4154–01–P

DEPARTMENT OF HEALTH AND HUMAN SERVICES

Administration for Community Living

Agency Information Collection Activities: Submission for OMB Review; Comment Request; Protection and Advocacy for Assistive Technology (PAAT) Program Performance Report

AGENCY: Administration for Community Living, HHS.

ACTION: Notice.

SUMMARY: The Administration on Intellectual and Developmental Disabilities (AIDD), Administration for Community Living (ACL) is announcing an opportunity to comment on the proposed collection of information by the agency. Under the Paperwork Reduction Act of 1995 (the PRA), Federal agencies are required to publish notice in the **Federal Register** concerning each proposed collection of information, including each proposed extension of an existing collection of information, and to allow 60 days for public comment in response to the notice. This notice collects comments on the information collection requirements relating to an existing collection: Protection and Advocacy for Assistive Technology (PAAT) Program Performance Report (0985–0046).

DATES: Submit written comments on the collection of information by August 10, 2015.

ADDRESSES: Submit written comments on the collection of information by email to *Clare.Barnett@acl.gov.*

FOR FURTHER INFORMATION CONTACT: Clare Barnett, Administration for Community Living, Administration on Intellectual and Developmental Disabilities, Office of Program Support, One Massachusetts Avenue NW., Room 4204, Washington, DC 20201, 202–357–3426.

SUPPLEMENTARY INFORMATION: Federal statute requires the Protection and Advocacy (P&A) System in each State to annually prepare and submit to the Secretary a report that includes documentation of the progress made. AIDD reviews the program performance report (PPR) for compliance and for program outcomes. AIDD will aggregate the information in the PPRs into a national profile of programmatic activities and accomplishments, and permit AIDD to track accomplishments against goals and formulate areas of technical assistance and compliance with Federal requirements.

ACL estimates the burden of this collection of information as follows:

ANNUAL BURDEN ESTIMATES

Instrument	Number of respondents	Number of responses per respondent	Average burden hours per response	Total burden hours
PADD SGP	57	1	16	912

Estimated Total Annual Burden Hours: 912.

Dated: June 3, 2015.

Kathy Greenlee,

Administrator & Assistant Secretary for Aging.

[FR Doc. 2015–14053 Filed 6–8–15; 8:45 am]

BILLING CODE 4154–01–P

DEPARTMENT OF HEALTH AND HUMAN SERVICES

Administration on Community Living

Proposed Information Collection Activity; Comment Request; Protection and Advocacy Statement of Goals and Priorities

AGENCY: Administration for Community Living, Administration on Intellectual and Developmental Disabilities, HHS.

ACTION: Notice.

SUMMARY: Federal statute and regulation require each Protection and Advocacy (P&A) System to prepare and submit to HHS a Statement of Goals and Priorities (SGP) for the P&A for Developmental Disabilities (PADD) program for each coming fiscal year. While the P&A is mandated to protect and advocate under a range of different Federally authorized disabilities programs, only the PADD program requires an SGP. Following the required public input for the coming fiscal year, the P&As submit the final version of this SGP to the Administration on Intellectual and Developmental Disabilities (AIDD). AIDD will analyze each SGP for compliance and aggregate the information in the SGPs into a national profile of programmatic emphasis for P&A Systems in the coming year. This aggregation will provide AIDD with a

tool for monitoring of the P&As, including the public input requirement. Furthermore, it will provide an overview of program priorities, and permit AIDD to track accomplishments against goals, permitting the formulation of technical assistance and compliance with the Developmental Disabilities Assistance and Bill of Rights Act of 2000.

DATES: Submit written comments on the collection of information by August 10, 2015.

ADDRESSES: Submit written comments on the collection of information by email to: *Valerie.Bond@aoa.hhs.gov.*

FOR FURTHER INFORMATION CONTACT: Valerie Bond, Administration on Community Living, Administration on Intellectual and Developmental Disabilities, Office of Program Support, One Massachusetts Avenue NW., Room 4302, Washington, DC 20201, 202–690–5841.

SUPPLEMENTARY INFORMATION: In compliance with the requirements of section 506 (c)(2)(A) of the Paperwork Reduction Act of 1995, the Administration on Community Living is soliciting public comment on the specific aspects of the information collection described above. Copies of the proposed collection of information can be obtained and comments may be forwarded by writing to: Valerie Bond, Administration on Community Living, Administration on Intellectual and Developmental Disabilities, Office of Program, One Massachusetts Avenue, NW., Room 4302, Washington, DC 20201.

The Department specifically requests comments on: (a) Whether the proposed Collection of information is necessary for the proper performance of the function of the agency, including whether the information shall have practical utility; (b) the accuracy of the agency's estimate of the burden of the proposed collection of information; (c) the quality, utility, and clarity of the information to be collected; (d) ways to minimize the burden information to be collected; and (e) ways to minimize the burden of the collection of information on respondents, including through the use of automated collection technique comments and or other forms of information technology. Consideration will be given to comments and suggestions submitted within 60 days of this publication.

Respondents: 57 Protection and Advocacy Systems

ANNUAL BURDEN ESTIMATES

Instrument	Number of respondents	Number of responses per respondent	Average burden hours per response	Total burden hours
State Developmental Disabilities Council 5-Year State Plan	57	1	44	2,508

Estimated Total Annual Burden Hours: 2,508.

Dated: June 3, 2015.

Kathy Greenlee,

Administrator and Assistant Secretary for Aging.

[FR Doc. 2015–14050 Filed 6–8–15; 8:45 am]

BILLING CODE 4154–01–P

DEPARTMENT OF HEALTH AND HUMAN SERVICES

Food and Drug Administration

[Docket No. FDA–2014–N–0373]

Agency Information Collection Activities; Announcement of Office of Management and Budget Approval; Risk and Benefit Perception Scale Development

AGENCY: Food and Drug Administration, HHS.

ACTION: Notice.

SUMMARY: The Food and Drug Administration (FDA) is announcing that a collection of information entitled ''Risk and Benefit Perception Scale Development'' has been approved by the Office of Management and Budget (OMB) under the Paperwork Reduction Act of 1995.

FOR FURTHER INFORMATION CONTACT: FDA PRA Staff, Office of Operations, Food and Drug Administration, 8455 Colesville Rd., COLE–14526, Silver Spring, MD 20993–0002, *PRAStaff@fda.hhs.gov.*

SUPPLEMENTARY INFORMATION: On November 28, 2015, the Agency submitted a proposed collection of information entitled ''Risk and Benefit Perception Scale Development'' to OMB for review and clearance under 44 U.S.C. 3507. An Agency may not conduct or sponsor, and a person is not required to respond to, a collection of information unless it displays a currently valid OMB control number. OMB has now approved the information collection and has assigned OMB control number 0910–0784. The approval expires on May 31, 2018. A copy of the supporting statement for this information collection is available on the Internet at *http://www.reginfo.gov/public/do/PRAMain.*

Dated: June 3, 2015.

Leslie Kux,

Associate Commissioner for Policy.

[FR Doc. 2015–14027 Filed 6–8–15; 8:45 am]

BILLING CODE 4164–01–P

DEPARTMENT OF HEALTH AND HUMAN SERVICES

Food and Drug Administration

[Docket No. FDA–2011–N–0672]

Agency Information Collection Activities; Announcement of Office of Management and Budget Approval; Prominent and Conspicuous Mark of Manufacturers on Single-Use Devices

AGENCY: Food and Drug Administration, HHS.

ACTION: Notice.

SUMMARY: The Food and Drug Administration (FDA) is announcing that a collection of information entitled, ''Prominent and Conspicuous Mark of Manufacturers on Single-Use Devices'' has been approved by the Office of Management and Budget (OMB) under the Paperwork Reduction Act of 1995.

FOR FURTHER INFORMATION CONTACT: FDA PRA Staff, Office of Operations, Food and Drug Administration, 8455 Colesville Rd., COLE–14526, Silver Spring, MD 20993–0002, *PRAStaff@fda.hhs.gov.*

SUPPLEMENTARY INFORMATION: On April 23, 2015, the Agency submitted a proposed collection of information entitled, ''Prominent and Conspicuous Mark of Manufacturers on Single-Use Devices'' to OMB for review and clearance under 44 U.S.C. 3507. An

Agency may not conduct or sponsor, and a person is not required to respond to, a collection of information unless it displays a currently valid OMB control number. OMB has now approved the information collection and has assigned OMB control number 0910–0577. The approval expires on May 31, 2018. A copy of the supporting statement for this information collection is available on the Internet at *http://www.reginfo.gov/public/do/PRAMain.*

Dated: June 3, 2015.

Leslie Kux,

Associate Commissioner for Policy.

[FR Doc. 2015–14057 Filed 6–8–15; 8:45 am]

BILLING CODE 4164–01–P

DEPARTMENT OF HEALTH AND HUMAN SERVICES

Food and Drug Administration

[Docket No. FDA–2014–N–2294]

Agency Information Collection Activities; Announcement of Office of Management and Budget Approval; Evaluation of the Food and Drug Administration's 'Fresh Empire' Multicultural Youth Tobacco Prevention Campaign

AGENCY: Food and Drug Administration, HHS.

ACTION: Notice.

SUMMARY: The Food and Drug Administration (FDA) is announcing that a collection of information entitled, ''Evaluation of the Food and Drug Administration's 'Fresh Empire' Multicultural Youth Tobacco Prevention Campaign'' has been approved by the Office of Management and Budget (OMB) under the Paperwork Reduction Act of 1995.

FOR FURTHER INFORMATION CONTACT: FDA PRA Staff, Office of Operations, Food and Drug Administration, 8455 Colesville Rd., COLE–14526, Silver Spring, MD 20993–0002, *PRAStaff@fda.hhs.gov*.

SUPPLEMENTARY INFORMATION: On April 15, 2015, the Agency submitted a proposed collection of information entitled, ''Evaluation of the Food and Drug Administration's 'Fresh Empire' Multicultural Youth Tobacco Prevention Campaign'' to OMB for review and clearance under 44 U.S.C. 3507. An Agency may not conduct or sponsor, and a person is not required to respond to, a collection of information unless it displays a currently valid OMB control number. OMB has now approved the information collection and has assigned OMB control number 0910–0788. The approval expires on May 31, 2018. A copy of the supporting statement for this information collection is available on the Internet at *http://www.reginfo.gov/public/do/PRAMain.*

Dated: June 3, 2015.

Leslie Kux,

Associate Commissioner for Policy.

[FR Doc. 2015–14056 Filed 6–8–15; 8:45 am]

BILLING CODE 4164–01–P

DEPARTMENT OF HEALTH AND HUMAN SERVICES

Office of the Secretary

[Document Identifier: HHS–OS–0990–New–30D]

Agency Information Collection Activities; Submission to OMB for Review and Approval; Public Comment Request

AGENCY: Office of the Secretary, HHS.

ACTION: Notice.

SUMMARY: In compliance with section 3507(a)(1)(D) of the Paperwork Reduction Act of 1995, the Office of the Secretary (OS), Department of Health and Human Services, has submitted an Information Collection Request (ICR), described below, to the Office of Management and Budget (OMB) for review and approval. The ICR is for a new collection. Comments submitted during the first public review of this ICR will be provided to OMB. OMB will accept further comments from the public on this ICR during the review and approval period.

DATES: Comments on the ICR must be received on or before July 9, 2015.

ADDRESSES: Submit your comments to *OIRA_submission@omb.eop.gov* or via facsimile to (202) 395–5806.

FOR FURTHER INFORMATION CONTACT: Information Collection Clearance staff, *Information.CollectionClearance@hhs.gov* or (202) 690–6162.

SUPPLEMENTARY INFORMATION: When submitting comments or requesting information, please include the Information Collection Request Title and document identifier HHS–OS–0990–New–30D for reference.

Information Collection Request Title: Midwest HIV Prevention and Pregnancy Planning Initiative (MHPPPI).

Abstract: HHS Office of the Assistant Secretary for Health (OASH)/Office of Women's Health (OWH) is seeking an approval on a new information collection request by the Office of Management and Budget (OMB), the program office initiatives on the evaluation of the MHPPPI will be conducted by the AIDS Foundation of Chicago's (AFC) internal Research, Evaluation and Data Services (REDS) department, which specializes in documenting, evaluating and analyzing the process, impact and outcomes of health programs. The evaluation framework for MHPPPI includes process monitoring, impact evaluation, outcome evaluation and dissemination. The impact evaluation will be informed by an initial climate survey of a sample of medical providers within the Midwest to develop a conservative baseline estimate of the counterfactual model. The counterfactual model will postulate what would have happened without the intervention. The impact evaluation will also document and analyze the degree to which services are integrated in medical settings based on change agent surveys administered through participating trainees. The outcome evaluation will assess changes that occurred in each domain as a result of the intervention, including knowledge, attitudes and behaviors related to the specific training content. The overall evaluation goal is to assess whether or not MHPPPI:

(1) Increased the knowledge of providers,

(2) Facilitated the integration of pregnancy planning into the care of HIV-positive women/women with HIV-positive partners, and

(3) Increased access to innovative HIV prevention options in communities with high HIV prevalence.

Likely Respondents:

- HIV Primary Care Providers
  - Anyone who provides primary HIV care to persons of reproductive age (15–49)
- Reproductive Health Care Providers
  - Anyone who provides reproductive health care to HIV+ persons or HIV – persons with HIV+ partners.
- HIV-positive and HIV-negative women receiving reproductive health care

TOTAL ESTIMATED ANNUALIZED BURDEN—HOURS

Form name	Number of respondents	Number of responses per respondent	Average burden per response (in hours)	Total burden hours
Provider Survey	300	1	15/60	75
Patient Qualitative Interview	20	1	1	20
Provider Qualitative Interview	20	1	1	20
Total				105

Darius Taylor,

Information Collection Clearance Officer.

[FR Doc. 2015–14000 Filed 6–8–15; 8:45 am]

BILLING CODE 4150–28–P

DEPARTMENT OF HEALTH AND HUMAN SERVICES

National Institutes of Health

National Institute on Drug Abuse; Notice of Webinar Meeting

SUMMARY: Pursuant to the NIH Reform Act of 2006 (42 U.S.C. Sec.281 (d)(4)), notice is hereby given that the National Institute on Drug Abuse (NIDA) will provide two opportunities to enable public discussion on the Institute's proposal to reorganize its extramural program.

DATES: Opportunity # 1: Beginning June 12, 2015, the NIDA Director will make available an online summary of the proposed reorganization at: *http://www.drugabuse.gov/about-nida/noras-blog.* Comments will be invited.

Opportunity # 2: A public webinar will take place on June 19, 2015 at 3 p.m. Eastern Time, with attendance limited to space available.

ADDRESSES: Webex Meeting via: *https://nih.webex.com/nih/j.php?MTID=mcc2b711f67cee4a9abe2b2a9c1d78a0d.* Participants are encouraged to join this meeting at the link provided at least 20 minutes prior to the scheduled start time.

Instructions for joining the event can be found below:

1. Enter the Web URL above into your web browser address bar and hit enter.

2. If requested, enter your name and email address. 3. If a password is required, enter the meeting password: *Success1*

4. Click ''Join.''

For audio support to this event, the audio conference information is as follows:

Phone Number: *1–877–668–4493 Call-in toll-free number (US/Canada).*

Participant Code No. *620 763 396.*

Any interested person may file written comments by sending an email to *NIDAOrgComments@mail.nih.gov* by June 24, 2015. The statement should include the individual's name, contact information and, when applicable, professional affiliation.

FOR FURTHER INFORMATION CONTACT: Dave Daubert, Deputy Executive Officer, National Institute on Drug Abuse, Office of Management, 6001 Executive Boulevard, NSC Building, Room 5274,Bethesda, MD 20892, 301–402–1652, *daubert@nih.gov.*

SUPPLEMENTARY INFORMATION: The agenda for the web meeting will consist of updates made to the proposed reorganization plans for the NIDA extramural program based on findings by the National Advisory Council on Drug Abuse. The proposal seeks to bridge and integrate the key areas of translational neuroscience and neurobehavioral research, as well as capitalize on emerging scientific opportunities, while reducing barriers to scientific and interdisciplinary collaboration.

Members of the public wishing to attend the Webinar must view the discussion via webex link *https://nih.webex.com/nih/j.php?MTID=mcc2b711f67cee4a9abe2b2a9c1d78a0d* and enter the audio conference information above from their telephone. Upon opening the link provided, please contact your IT support group for assistance in uploading any necessary drivers (*e.g.* MBR2 player) prior to the start of this event.

Dated: June 3, 2015.

Nora Volkow,

Director, National Institute on Drug Abuse, National Institutes of Health.

[FR Doc. 2015–14062 Filed 6–8–15; 8:45 am]

BILLING CODE 4140–01–P

DEPARTMENT OF HEALTH AND HUMAN SERVICES

National Institutes of Health

National Human Genome Research Institute; Notice of Closed Meetings

Pursuant to section 10(d) of the Federal Advisory Committee Act, as amended (5 U.S.C. App.), notice is hereby given of the following meetings.

The meetings will be closed to the public in accordance with the provisions set forth in sections 552b(c)(4) and 552b(c)(6), Title 5 U.S.C., as amended. The grant applications and the discussions could disclose confidential trade secrets or commercial property such as patentable material, and personal information concerning individuals associated with the grant applications, the disclosure of which would constitute a clearly unwarranted invasion of personal privacy.

Name of Committee: National Human Genome Research Institute Special Emphasis Panel; Genome Sequencing Program Coordinating Center (GSPCC).

Date: June 23, 2015.

Time: 11:00 a.m. to 2:00 p.m.

Agenda: To review and evaluate grant applications.

Place: National Human Genome Research Institute 3rd Floor Conference Room, 5635 Fishers Lane Rockville, MD, (Telephone Conference Call).

Contact Person: Lita Proctor, Ph.D., Extramural Research Programs Staff, Program Director, Human Microbiome Project, National Human Genome Research Institute 5635 Fishers Lane, Suite 4076, Bethesda, MD 20892, 301 496–4550, *proctorlm@mail.nih.gov.*

This notice is being published less than 15 days prior to the meeting due to the timing limitations imposed by the review and funding cycle.

Name of Committee: National Human Genome Research Institute Special Emphasis Panel; Sequencing Center RFAs.

Date: July 20–21, 2015.

Time: 8:00 a.m. to 5:00 p.m.

Agenda: To review and evaluate grant applications.

Place: Renaissance Arlington Capital View Hotel, Studio B, 2800 South Potomac Avenue, Arlington, VA 22202.

Contact Person: Rudy O. Pozzatti, Ph.D., Scientific Review Officer Scientific Review Branch, National Human Genome Research Institute 5635 Fishers Lane, Suite 4076, MSC 9306, Rockville, MD 20852, (301) 402–0838, *pozzattr@mail.nih.gov.*

(Catalogue of Federal Domestic Assistance Program Nos. 93.172, Human Genome Research, National Institutes of Health, HHS)

Dated: June 4, 2015.

David Clary,

Program Analyst, Office of Federal Advisory Committee Policy.

[FR Doc. 2015–14043 Filed 6–8–15; 8:45 am]

BILLING CODE 4140–01–P

DEPARTMENT OF HEALTH AND HUMAN SERVICES

National Institutes of Health

Center for Scientific Review; Notice of Closed Meetings

Pursuant to section 10(d) of the Federal Advisory Committee Act, as amended (5 U.S.C. App.), notice is hereby given of the following meetings.

The meetings will be closed to the public in accordance with the provisions set forth in sections 552b(c)(4) and 552b(c)(6), Title 5 U.S.C., as amended. The grant applications and the discussions could disclose confidential trade secrets or commercial property such as patentable material, and personal information concerning individuals associated with the grant applications, the disclosure of which would constitute a clearly unwarranted invasion of personal privacy.

Name of Committee: Center for Scientific Review Special Emphasis Panel; Clinical and Translational Imaging Applications.

Date: June 24, 2015.

Time: 10:00 a.m. to 5:00 p.m.

Agenda: To review and evaluate grant applications.

Place: National Institutes of Health, 6701 Rockledge Drive, Bethesda, MD 20892.

Contact Person: Eileen W. Bradley, DSC, Chief, SBIB IRG, Center for Scientific Review, National Institutes of Health, 6701 Rockledge Drive, Room 5100, MSC 7854, Bethesda, MD 20892, (301) 435–1179, *bradleye@csr.nih.gov*.

Name of Committee: Center for Scientific Review Special Emphasis Panel; Immune Mediators and Glia.

Date: June 25, 2015.

Time: 4:00 p.m. to 5:00 p.m.

Agenda: To review and evaluate grant applications.

Place: Crystal Gateway Marriott, 1700 Jefferson Davis Highway, Arlington, VA 22202.

Contact Person: Carole L. Jelsema, Ph.D., Chief and Scientific Review Officer, Center for Scientific Review, National Institutes of Health, 6701 Rockledge Drive, Room 4176, MSC 7850, Bethesda, MD 20892, (301) 435–1248, *jelsemac@csr.nih.gov*.

Name of Committee: Center for Scientific Review Special Emphasis Panel; Risk, Prevention and Intervention for Addictions.

Date: June 29–30, 2015.

Time: 8:00 a.m. to 5:00 p.m.

Agenda: To review and evaluate grant applications.

Place: Palomar Hotel, 2121 P Street NW., Washington, DC 20037.

Contact Person: Kristen Prentice, Ph.D., Scientific Review Officer, Center for Scientific Review, National Institutes of Health, 6701 Rockledge Drive, Room 3112, MSC 7808, Bethesda, MD 20892, (301) 496–0726, *prenticekj@mail.nih.gov*.

Name of Committee: Center for Scientific Review Special Emphasis Panel; RFA–RM–14–008: Study of Nuclear Bodies and Compartments.

Date: July 6, 2015.

Time: 8:00 a.m. to 6:00 p.m.

Agenda: To review and evaluate grant applications.

Place: Embassy Suites at the Chevy Chase Pavilion, 4300 Military Road NW., Washington, DC 20015.

Contact Person: Thomas Beres, Ph.D., Scientific Review Officer, Center for Scientific Review, National Institutes of Health, 6701 Rockledge Dr. Rm. 5201, MSC 7840, Bethesda, MD 20892, 301–435–1175, *berestm@mail.nih.gov*.

Name of Committee: Center for Scientific Review Special Emphasis Panel; RFA–RM–14–008: Study of Nuclear Bodies and Compartments.

Date: July 6, 2015.

Time: 8:00 a.m. to 6:00 p.m.

Agenda: To review and evaluate grant applications.

Place: Embassy Suites at the Chevy Chase Pavilion, 4300 Military Road NW., Washington, DC 20015.

Contact Person: David Balasundaram, Ph.D., Scientific Review Officer, Center for Scientific Review, National Institutes of Health, 6701 Rockledge Drive, Room 5189, MSC 7840, Bethesda, MD 20892, 301–435–1022, *balasundaramd@csr.nih.gov*.

Name of Committee: Center for Scientific Review Special Emphasis Panel; Small Business: Endocrinology, Metabolism, Nutrition, and Reproductive Sciences.

Date: July 8, 2015.

Time: 8:00 a.m. to 7:00 p.m.

Agenda: To review and evaluate grant applications.

Place: Residence Inn Bethesda, 7335 Wisconsin Avenue, Bethesda, MD 20814.

Contact Person: Clara M. Cheng, Ph.D., Scientific Review Officer, Center for Scientific Review, National Institutes of Health, 6701 Rockledge Drive, Room 6170 MSC 7892, Bethesda, MD 20817, 301–435–1041, *chengc@csr.nih.gov*.

Name of Committee: Center for Scientific Review Special Emphasis Panel; Fellowships: Risk, Prevention and Health Behavior.

Date: July 9–10, 2015.

Time: 8:00 a.m. to 5:00 p.m.

Agenda: To review and evaluate grant applications.

Place: Embassy Suites at the Chevy Chase Pavilion, 4300 Military Road NW., Washington, DC 20015.

Contact Person: Martha M. Faraday, Ph.D., Scientific Review Officer, Center for Scientific Review, National Institutes of Health, 6701 Rockledge Drive, Room 3110, MSC 7808, Bethesda, MD 20892, (301) 435–3575, *faradaym@csr.nih.gov*.

(Catalogue of Federal Domestic Assistance Program Nos. 93.306, Comparative Medicine; 93.333, Clinical Research, 93.306, 93.333, 93.337, 93.393–93.396, 93.837–93.844, 93.846–93.878, 93.892, 93.893, National Institutes of Health, HHS)

Dated: June 4, 2015.

David Clary,

Program Analyst, Office of Federal Advisory Committee Policy.

[FR Doc. 2015–14046 Filed 6–8–15; 8:45 am]

BILLING CODE 4140–01–P

DEPARTMENT OF HEALTH AND HUMAN SERVICES

National Institutes of Health

National Institute on Aging; Notice of Closed Meeting

Pursuant to section 10(d) of the Federal Advisory Committee Act, as amended (5 U.S.C. App.), notice is hereby given of the following meeting.

The meeting will be closed to the public in accordance with the provisions set forth in sections 552b(c)(4) and 552b(c)(6), Title 5 U.S.C., as amended. The grant applications and the discussions could disclose confidential trade secrets or commercial property such as patentable material, and personal information concerning individuals associated with the grant applications, the disclosure of which would constitute a clearly unwarranted invasion of personal privacy.

Name of Committee: National Institute on Aging Special Emphasis Panel; Juvenile Protective Factors and Aging.

Date: July 6, 2015.

Time: 12:00 p.m. to 2:00 p.m.

Agenda: To review and evaluate grant applications.

Place: National Institute on Aging, Gateway Building, Suite 2C212, 7201 Wisconsin Avenue, Bethesda, MD 20892, (Telephone Conference Call).

Contact Person: Elaine Lewis, Ph.D., Scientific Review Branch, National Institute on Aging, Gateway Building, Suite 2C212, MSC–9205, 7201 Wisconsin Avenue, Bethesda, MD 20892, 301–402–7707 *elainelewis@nia.nih.gov*.

(Catalogue of Federal Domestic Assistance Program Nos. 93.866, Aging Research, National Institutes of Health, HHS)

Dated: June 4, 2015.

Melanie J. Gray,

Program Analyst, Office of Federal Advisory Committee Policy.

[FR Doc. 2015–14040 Filed 6–8–15; 8:45 am]

BILLING CODE 4140–01–P

DEPARTMENT OF HEALTH AND HUMAN SERVICES

National Institutes of Health

National Institute of General Medical Sciences; Notice of Closed Meeting

Pursuant to section 10(d) of the Federal Advisory Committee Act, as amended (5 U.S.C. App.), notice is hereby given of the following meeting.

The meetings will be closed to the public in accordance with the provisions set forth in sections 552b(c)(4) and 552b(c)(6), Title 5 U.S.C., as amended. The grant applications and the discussions could disclose confidential trade secrets or commercial property such as patentable material, and personal information concerning individuals associated with the grant applications, the disclosure of which would constitute a clearly unwarranted invasion of personal privacy.

Name of Committee: National Institute of General Medical Sciences Initial Review Group; Training and Workforce Development Subcommittee—A.

Date: July 8, 2015.

Time: 8:00 a.m. to 5:00 p.m.

Agenda: To review and evaluate grant applications.

Place: Courtyard by Marriott Chevy Chase, 5520 Wisconsin Avenue, Chevy Chase, MD 20815.

Contact Person: John J. Laffan, Ph.D., Scientific Review Officer, Office of Scientific Review, National Institute of General Medical Sciences, National Institutes of Health, 45 Center Drive, Room 3An.18J, Bethesda, MD 20892, 301–594–2773, *laffanjo@mail.nih.gov*.

(Catalogue of Federal Domestic Assistance Program Nos. 93.375, Minority Biomedical Research Support; 93.821, Cell Biology and Biophysics Research; 93.859, Pharmacology, Physiology, and Biological Chemistry Research; 93.862, Genetics and Developmental Biology Research; 93.88, Minority Access to Research Careers; 93.96, Special Minority Initiatives, National Institutes of Health, HHS)

Dated: June 4, 2015.

Melanie J. Gray,

Program Analyst, Office of Federal Advisory Committee Policy.

[FR Doc. 2015–14038 Filed 6–8–15; 8:45 am]

BILLING CODE 4140–01–P

DEPARTMENT OF HEALTH AND HUMAN SERVICES

National Institutes of Health

National Institute of Neurological Disorders and Stroke: Notice of Closed Meetings

Pursuant to section 10(d) of the Federal Advisory Committee Act, as amended (5 U.S.C. App.), notice is hereby given of the following meetings.

The meetings will be closed to the public in accordance with the provisions set forth in sections 552b(c)(4) and 552b(c)(6), Title 5 U.S.C., as amended. The grant applications and the discussions could disclose confidential trade secrets or commercial property such as patentable material, and personal information concerning individuals associated with the grant applications, the disclosure of which would constitute a clearly unwarranted invasion of personal privacy.

Name of Committee: National Institute of Neurological Disorders and Stroke Special Emphasis Panel; Clinical Trials in Neurological Disorders.

Date: June 25–26, 2015.

Time: 8:00 a.m. to 12:00 p.m.

Agenda: To review and evaluate grant applications.

Place: The Warwick Allerton Hotel, 701 North Michigan Avenue, Chicago, IL 60611.

Contact Person: Shanta Rajaram, Ph.D., Scientific Review Officer, Scientific Review Branch, Division of Extramural Research, NINDS/NIH/DHHS/Neuroscience Center, 6001 Executive Blvd., Suite 3208, MSC9529, Bethesda, MD 20852, (301) 435–6033, *rajarams@mail.nih.gov.*

Name of Committee: National Institute of Neurological Disorders and Stroke Special Emphasis Panel; Member Conflict Review.

Date: July 1, 2015.

Time: 11:00 a.m. to 12:00 p.m.

Agenda: To review and evaluate grant applications.

Place: National Institutes of Health, Neuroscience Center, 6001 Executive Boulevard, Rockville, MD 20852, (Telephone Conference Call).

Contact Person: Elizabeth A Webber, Ph.D., Scientific Review Officer, Scientific Review Branch, Division of Extramural Research, NINDS/NIH/DHHS/Neuroscience Center, 6001 Executive Boulevard, Suite 3208, MSC 9529, Bethesda, MD 20892–9529, 301–496–1917, *webbere@mail.nih.gov.*

(Catalogue of Federal Domestic Assistance Program Nos. 93.853, Clinical Research Related to Neurological Disorders; 93.854, Biological Basis Research in the Neurosciences, National Institutes of Health, HHS)

June 3, 2015.

Carolyn Baum,

Program Analyst, Office of Federal Advisory Committee Policy.

[FR Doc. 2015–13963 Filed 6–8–15; 8:45 am]

BILLING CODE 4140–01–P

DEPARTMENT OF HEALTH AND HUMAN SERVICES

National Institutes of Health

Center for Scientific Review: Notice of Closed Meetings

Pursuant to section 10(d) of the Federal Advisory Committee Act, as amended (5 U.S.C. App.), notice is hereby given of the following meetings.

The meetings will be closed to the public in accordance with the provisions set forth in sections 552b(c)(4) and 552b(c)(6), Title 5 U.S.C., as amended. The grant applications and the discussions could disclose confidential trade secrets or commercial property such as patentable material, and personal information concerning individuals associated with the grant applications, the disclosure of which would constitute a clearly unwarranted invasion of personal privacy.

Name of Committee: Center for Scientific Review Special Emphasis Panel; PAR Panel: Physical Activity and Weight Control Interventions among Cancer Survivors: Effects on Biomarkers of Prognosis.

Date: June 17, 2015.

Time: 4:30 p.m. to 6:00 p.m.

Agenda: To review and evaluate grant applications.

Place: National Institutes of Health, 6701 Rockledge Drive, Bethesda, MD 20892, (Telephone Conference Call).

Contact Person: Denise Wiesch, Ph.D., Scientific Review Officer, Center for Scientific Review, National Institutes of Health, 6701 Rockledge Drive, Room 3138, MSC 7770, Bethesda, MD 20892, (301) 437–3478, *wieschd@csr.nih.gov.*

This notice is being published less than 15 days prior to the meeting due to the timing limitations imposed by the review and funding cycle.

Name of Committee: Center for Scientific Review Special Emphasis Panel; Fellowships: Cell Biology, Developmental Biology, and Bioengineering.

Date: June 30–July 1, 2015.

Time: 8:00 a.m. to 6:00 p.m.

Agenda: To review and evaluate grant applications.

Place: Bethesda North Marriott Hotel & Conference Center, 5701 Marinelli Road, Bethesda, MD 20852.

Contact Person: Raj K. Krishnaraju, Ph.D., Scientific Review Officer, Center for Scientific Review, National Institutes of Health, 6701 Rockledge Drive, Room 6190, Bethesda, MD 20892, 301–435–1047, *kkrishna@csr.nih.gov.*

Name of Committee: Center for Scientific Review Special Emphasis Panel; Member Conflict: Surgical Sciences and Bioengineering.

Date: June 30, 2015.

Time: 11:00 a.m. to 4:00 p.m.

Agenda: To review and evaluate grant applications.

Place: National Institutes of Health, 6701 Rockledge Drive, Bethesda, MD 20892, (Virtual Meeting).

Contact Person: Mehrdad Mohseni, MD, Scientific Review Officer, Center for Scientific Review, National Institutes of Health, 6701 Rockledge Drive, Room 5211, MSC 7854, Bethesda, MD 20892, 301–435–0484, *mohsenim@csr.nih.gov.*

Name of Committee: Center for Scientific Review Special Emphasis Panel; Member Conflict: Oncology Basic Translational.

Date: July 1, 2015.

Time: 8:00 a.m. to 6:00 p.m.

Agenda: To review and evaluate grant applications.

Place: National Institutes of Health, 6701 Rockledge Drive, Bethesda, MD 20892.

Contact Person: Ola Mae Zack Howard, Ph.D., Scientific Review Officer, Center for Scientific Review, National Institutes of Health, 6701 Rockledge Dr. Room 4192, MSC 7806, Bethesda, MD 20892, 301–451–4467, *howardz@mail.nih.gov.*

Name of Committee: Center for Scientific Review Special Emphasis Panel; Small Business: Cancer diagnostics and Treatments (CDT).

Date: July 1, 2015.

Time: 11:00 a.m. to 6:00 p.m.

Agenda: To review and evaluate grant applications.

Place: National Institutes of Health, 6701 Rockledge Drive, Bethesda, MD 20892, (Telephone Conference Call).

Contact Person: Lawrence Ka-Yun Ng, Ph.D., Scientific Review Officer, Center for Scientific Review, National Institutes of Health, 6701 Rockledge Drive, Room 6152, MSC 7804, Bethesda, MD 20892, 301–435–1719, *ngkl@csr.nih.gov.*

Name of Committee: Center for Scientific Review Special Emphasis Panel; Member Conflicts: Kidney, Nutrition, Obesity, and Diabetes Epidemiology.

Date: July 2, 2015.

Time: 11:00 a.m. to 12:30 p.m.

Agenda: To review and evaluate grant applications.

Place: National Institutes of Health, 6701 Rockledge Drive, Bethesda, MD 20892, (Telephone Conference Call).

Contact Person: Denise Wiesch, Ph.D., Scientific Review Officer, Center for Scientific Review, National Institutes of Health, 6701 Rockledge Drive, Room 3138, MSC 7770, Bethesda, MD 20892, (301) 437–3478, *wieschd@csr.nih.gov.*

(Catalogue of Federal Domestic Assistance Program Nos. 93.306, Comparative Medicine; 93.333, Clinical Research, 93.306, 93.333, 93.337, 93.393–93.396, 93.837–93.844, 93.846–93.878, 93.892, 93.893, National Institutes of Health, HHS)

Dated: June 3, 2015.

Michelle Trout,

Program Analyst, Office of Federal Advisory Committee Policy.

[FR Doc. 2015–13962 Filed 6–8–15; 8:45 am]

BILLING CODE 4140–01–P

DEPARTMENT OF HEALTH AND HUMAN SERVICES

National Institutes of Health

Eunice Kennedy Shriver National Institute of Child Health and Human Development: Notice of Closed Meeting

Pursuant to section 10(d) of the Federal Advisory Committee Act, as amended (5 U.S.C. App.), notice is hereby given of the following meeting.

The meeting will be closed to the public in accordance with the provisions set forth in section 552b(c)(4) and 552b(c)(6), Title 5 U.S.C., as amended. The grant applications and the discussions could disclose confidential trade secrets or commercial property such as patentable material, and personal information concerning individuals associated with the grant applications, the disclosure of which would constitute a clearly unwarranted invasion of personal privacy.

Name of Committee: National Institute of Child Health and Human Development Special Emphasis Panel.

Date: July 21, 2015.

Time: 11:00 a.m. to 12:00 p.m.

Agenda: To review and evaluate grant applications.

Place: National Institutes of Health, 6100 Executive Boulevard, Rockville, MD 20852, (Telephone Conference Call).

Contact Person: Peter Zelazowski, Ph.D., Scientific Review Officer, Scientific Review Branch, Eunice Kennedy Shriver National Institute of Child Health and Human Development, NIH, 6100 Executive Boulevard, Room 5B01, Bethesda, MD 20892–9304, (301) 435–6902, *Peter.zelazowski@mail.nih.gov.*

(Catalogue of Federal Domestic Assistance Program Nos. 93.864, Population Research; 93.865, Research for Mothers and Children; 93.929, Center for Medical Rehabilitation Research; 93.209, Contraception and Infertility Loan Repayment Program, National Institutes of Health, HHS)

Dated: June 3, 2015.

Michelle Trout,

Program Analyst, Office of Federal Advisory Committee Policy.

[FR Doc. 2015–13959 Filed 6–8–15; 8:45 am]

BILLING CODE 4140–01–P

DEPARTMENT OF HEALTH AND HUMAN SERVICES

National Institutes of Health

National Heart, Lung, and Blood Institute: Notice of Closed Meetings

Pursuant to section 10(d) of the Federal Advisory Committee Act, as amended (5 U.S.C. App.), notice is hereby given of the following meetings.

The meetings will be closed to the public in accordance with the provisions set forth in sections 552b(c)(4) and 552b(c)(6), Title 5 U.S.C., as amended. The grant applications and the discussions could disclose confidential trade secrets or commercial property such as patentable material, and personal information concerning individuals associated with the grant applications, the disclosure of which would constitute a clearly unwarranted invasion of personal privacy.

Name of Committee: National Heart, Lung, and Blood Institute Special Emphasis Panel; NHLBI Lung Primary Prevention Review.

Date: July 1, 2015.

Time: 8:00 a.m. to 1:00 p.m.

Agenda: To review and evaluate grant applications.

Place: Hilton Garden Inn Washington, DC/Bethesda, 7301 Waverly Street, Bethesda, MD 20814.

Contact Person: YingYing Li-Smerin, MD, Ph.D. Scientific Review Officer, Office of Scientific Review/DERA National Heart, Lung, and Blood Institute, 6701 Rockledge Drive, Room 7184, Bethesda, MD 20892–7924, 301–435–0277 *lismerin@nhlbi.nih.gov.*

Name of Committee: National Heart, Lung, and Blood Institute Special Emphasis Panel; NHLBI Lung Primary Prevention Review.

Date: July 1, 2015.

Time: 1:00 p.m. to 5:00 p.m.

Agenda: To review and evaluate grant applications.

Place: Hilton Garden Inn Washington, DC/Bethesda, 7301 Waverly Street, Bethesda, MD 20814.

Contact Person: YingYing Li-Smerin, MD, Ph.D. Scientific Review Officer, Office of Scientific Review/DERA National Heart, Lung, and Blood Institute, 6701 Rockledge Drive, Room 7184, Bethesda, MD 20892–7924, 301–435–0277 *lismerin@nhlbi.nih.gov.*

(Catalogue of Federal Domestic Assistance Program Nos. 93.233, National Center for Sleep Disorders Research; 93.837, Heart and Vascular Diseases Research; 93.838, Lung Diseases Research; 93.839, Blood Diseases and Resources Research, National Institutes of Health, HHS)

Dated: June 3, 2015.

Michelle Trout,

Program Analyst, Office of Federal Advisory Committee Policy.

[FR Doc. 2015–13960 Filed 6–8–15; 8:45 am]

BILLING CODE 4140–01–P

DEPARTMENT OF HEALTH AND HUMAN SERVICES

National Institutes of Health

Office of the Director, National Institutes of Health; Notice of Meeting

Pursuant to section 10(a) of the Federal Advisory Committee Act, as amended (5 U.S.C. App.), notice is hereby given of a meeting of the NIH

Scientific Management Review Board (SMRB). The meeting will be open to the public through teleconference at the number listed below.

The NIH Reform Act of 2006 (Public Law 109–482) provides organizational authorities to HHS and NIH officials to: (1) establish or abolish national research institutes; (2) reorganize the offices within the Office of the Director, NIH including adding, removing, or transferring the functions of such offices or establishing or terminating such offices; and (3) reorganize, divisions, centers, or other administrative units within an NIH national research institute or national center including adding, removing, or transferring the functions of such units, or establishing or terminating such units. The purpose of the SMRB is to advise appropriate HHS and NIH officials on the use of these organizational authorities and identify the reasons underlying the recommendations.

Name of Committee: Scientific Management Review Board (SMRB).

Date: July 6, 2015.

Time: 11:00 a.m. to 1:00 p.m. ET (Times are approximate and subject to change).

Agenda: At this meeting, the SMRB Working Group on the NIH Grant Review, Award, and Management Process will report their findings and recommendations on ways to streamline the grant award process, and present the Board with a draft of the Report on this topic. The SMRB members will deliberate the findings and recommendations developed by the Working Group and vote on whether to approve the Report. Time will be allotted on the agenda for public comment. To sign up for public comment, please submit your name and affiliation to the contact person listed below by 5:00 p.m. EST, June 29, 2015. Sign up will be restricted to one sign up per email. In the event that time does not allow for all those interested to present oral comments, anyone may file written comments using the contact person address below.

Place: National Institutes of Health, Office of the Director, NIH, Office of Science Policy, 6705 Rockledge Drive, Suite 750, Bethesda, MD 20892 (Telephone Conference Call).

Call-in Information: Toll-Free Number: 1–888–603–9605. Participant Passcode: 9573616.

Contact Person: Sarah Rhodes, Office of Science Policy, Office of the Director, NIH, National Institutes of Health, 6705 Rockledge Drive, Suite 750, Bethesda, MD 20892, *smrb@mail.nih.gov,* (301) 443–5851.

The draft meeting agenda and other information about the SMRB, including information about access to the webcast, will be available prior to the meeting at *http://smrb.od.nih.gov.*

The teleconference will include opportunity for public comment, time allowing. In addition, any interested person may file written comments with the committee via email or regular mail. Comments via email should be sent to *smrb@mail.nih.gov* with ''SMRB Public Comment'' as the subject line, and comments via regular mail should be sent to 6705 Rockledge Drive, Suite 750, Bethesda, MD 20892, Attention: Sarah Rhodes. Comments should include the name, address, telephone number and, when applicable, the business or professional affiliation of the commenter. Written comments will be provided to SMRB members; those received by 5:00 p.m. EST, June 29, 2015, will be shared with the members prior to the meeting.

(Catalogue of Federal Domestic Assistance Program Nos. 93.14, Intramural Research Training Award; 93.22, Clinical Research Loan Repayment Program for Individuals from Disadvantaged Backgrounds; 93.232, Loan Repayment Program for Research Generally; 93.39, Academic Research Enhancement Award; 93.936, NIH Acquired Immunodeficiency Syndrome Research Loan Repayment Program; 93.187, Undergraduate Scholarship Program for Individuals from Disadvantaged Backgrounds, National Institutes of Health, HHS)

Dated: June 4, 2015.

Melanie J. Gray,

Program Analyst, Office of Federal Advisory Committee Policy.

[FR Doc. 2015–14037 Filed 6–8–15; 8:45 am]

BILLING CODE 4140–01–P

DEPARTMENT OF HEALTH AND HUMAN SERVICES

National Institutes of Health

National Cancer Institute; Amended Notice of Meeting

Notice is hereby given of a change in the meeting of the National Cancer Institute Special Emphasis Panel, July 7, 2015, 11:00 a.m. to July 08, 2015, 06:00 p.m., National Cancer Institute Shady Grove, Shady Grove, 9609 Medical Center Drive, 2W032/034, Rockville, MD, 20850 which was published in the **Federal Register** on May 15, 2015 (80 FR 27982).

The meeting notice is amended to change the dates of the meeting to July 30–31, 2015 from 11:00 a.m. to 6:00 p.m. The meeting is closed to the public.

Dated: June 4, 2015.

Melanie J. Gray,

Program Analyst, Office of Federal Advisory Committee Policy.

[FR Doc. 2015–14042 Filed 6–8–15; 8:45 a.m.]

BILLING CODE 4140–01–P

DEPARTMENT OF HEALTH AND HUMAN SERVICES

National Institutes of Health

National Institute on Aging; Notice of Closed Meeting

Pursuant to section 10(d) of the Federal Advisory Committee Act, as amended (5 U.S.C. App.), notice is hereby given of the following meeting.

The meeting will be closed to the public in accordance with the provisions set forth in sections 552b(c)(4) and 552b(c)(6), Title 5 U.S.C., as amended. The contract proposals and the discussions could disclose confidential trade secrets or commercial property such as patentable material, and personal information concerning individuals associated with the contract proposals, the disclosure of which would constitute a clearly unwarranted invasion of personal privacy.

Name of Committee: National Institute on Aging Special Emphasis Panel; Aging and Neurodegeneration.

Date: July 9, 2015.

Time: 12:00 p.m. to 4:00 p.m.

Agenda: To review and evaluate contract proposals.

Place: National Institute on Aging, Gateway Building, 2C212, 7201 Wisconsin Avenue, Bethesda, MD 20892, (Telephone Conference Call).

Contact Person: Isis S. Mikhail, DRPH, MD, MPH, National Institute on Aging, Gateway Building, 7201 Wisconsin Avenue, Suite 2C212, Bethesda, MD 20892, 301–402–7704, *mikhaili@mail.nih.gov.*

(Catalogue of Federal Domestic Assistance Program Nos. 93.866, Aging Research, National Institutes of Health, HHS)

Dated: June 4, 2015.

Melanie J. Gray,

Program Analyst, Office of Federal Advisory Committee Policy.

[FR Doc. 2015–14041 Filed 6–8–15; 8:45 am]

BILLING CODE 4140–01–P

DEPARTMENT OF HEALTH AND HUMAN SERVICES

National Institutes of Health

National Cancer Institute; Amended Notice of Meeting

Notice is hereby given of a change in the meeting of the National Cancer Advisory Board, June 23, 2015, 6:30 p.m. to June 24, 2015, 5:00 p.m., National Institutes of Health, Building 31, 31 Center Drive, C Wing, 6th Floor, Conference Room 10, Bethesda, MD 20892 which was published in the **Federal Register** on May 15, 2015 (80 FR 27979).

This meeting is being amended to change the start time of the open session on June 24, 2015 from 9:00 a.m. to 8:30 a.m. The start time of the closed session will change to 4:30 p.m. and end at 6:00 p.m. The meeting is partially closed to the public.

Dated: June 4, 2015

Melanie J. Gray,

Program Analyst, Office of Federal Advisory Committee Policy.

[FR Doc. 2015–14044 Filed 6–8–15; 8:45 am]

BILLING CODE 4140–01–P

DEPARTMENT OF HEALTH AND HUMAN SERVICES

National Institutes of Health

National Institute on Minority Health and Health Disparities; Notice of Closed Meeting

Pursuant to section 10(d) of the Federal Advisory Committee Act, as amended (5 U.S.C. App.), notice is hereby given of the following meeting.

The meeting will be closed to the public in accordance with the provisions set forth in sections 552b(c)(4) and 552b(c)(6), Title 5 U.S.C., as amended. The grant applications and the discussions could disclose confidential trade secrets or commercial property such as patentable materials, and personal information concerning individuals associated with the grant applications, the disclosure of which would constitute a clearly unwarranted invasion of personal privacy.

Name of Committee: National Institute on Minority Health and Health Disparities Special Emphasis Panel; NIMHD Support for Conference and Scientific Meeting (R13).

Date: July 13, 2015.

Time: 12:00 p.m. to 5:00 p.m.

Agenda: To review and evaluate grant applications.

Place: National Institute on Minority Health, and Health Disparities, 6707 Democracy Boulevard, Suite 800, Bethesda, MD 20892.

Contact Person: Deborah Ismond, Ph.D., Scientific Review Officer, National Institute on Minority Health, and Health Disparities, National Institutes of Health, 6707 Democracy Blvd., Suite 800, Bethesda, MD 20892, (301) 402–1366, *mlaudesharp@mail.nih.gov.*

Dated: June 4, 2015.

David Clary,

Program Analyst, Office of Federal Advisory Committee Policy.

[FR Doc. 2015–14045 Filed 6–8–15; 8:45 am]

BILLING CODE 4140–01–P

DEPARTMENT OF HEALTH AND HUMAN SERVICES

National Institutes of Health

National Institute of General Medical Sciences; Notice of Closed Meetings

Pursuant to section 10(d) of the Federal Advisory Committee Act, as amended (5 U.S.C. App.), notice is hereby given of the following meetings.

The meetings will be closed to the public in accordance with the provisions set forth in sections 552b(c)(4) and 552b(c)(6), Title 5 U.S.C., as amended. The grant applications and the discussions could disclose confidential trade secrets or commercial property such as patentable material, and personal information concerning individuals associated with the grant applications, the disclosure of which would constitute a clearly unwarranted invasion of personal privacy.

Name of Committee: National Institute of General Medical Sciences Initial Review Group; Training and Workforce Development Subcommittee—B.

Date: June 30, 2015.

Time: 8:00 a.m. to 5:00 p.m.

Agenda: To review and evaluate grant applications.

Place: Embassy Row Hotel, 2015 Massachusetts Avenue NW., Washington, DC 20036.

Contact Person: Lisa A. Newman, SCD, Scientific Review Officer, Office of Scientific Review, National Institute of General Medical Sciences, National Institutes of Health, 45 Center Drive, Room 3An.12L, Bethesda, MD 20892, 301–594–2704, *newmanla2@nigms.nih.gov*.

Name of Committee: National Institute of General Medical Sciences Special Emphasis Panel; Conduct the initial scientific review and assess the merit of SCORE applications.

Date: June 30–July 1, 2015.

Time: 8:00 a.m. to 2:00 p.m.

Agenda: To review and evaluate grant applications.

Place: Marriott-Residence Inn Bethesda Downtown, 7335 Wisconsin Avenue, Bethesda, MD 20814.

Contact Person: Shinako Takada, Ph.D., Scientific Review Officer, Office of Scientific Review, National Institute of General Medical Sciences, National Institutes of Health, 45 Center Drive, Room 3An.18B, Bethesda, MD 20892, 301–594–2048, *shinako.takada@nih.gov*.

(Catalogue of Federal Domestic Assistance Program Nos. 93.375, Minority Biomedical Research Support; 93.821, Cell Biology and Biophysics Research; 93.859, Pharmacology, Physiology, and Biological Chemistry Research; 93.862, Genetics and Developmental Biology Research; 93.88, Minority Access to Research Careers; 93.96, Special Minority Initiatives, National Institutes of Health, HHS)

Dated: June 4, 2015.

Melanie J. Gray,

Program Analyst, Office of Federal Advisory Committee Policy.

[FR Doc. 2015–14039 Filed 6–8–15; 8:45 am]

BILLING CODE 4140–01–P

DEPARTMENT OF HEALTH AND HUMAN SERVICES

National Institutes of Health

National Heart, Lung, and Blood Institute: Notice of Closed Meeting

Pursuant to section 10(d) of the Federal Advisory Committee Act, as amended (5 U.S.C. App.), notice is hereby given of the following meeting.

The meeting will be closed to the public in accordance with the provisions set forth in sections 552b(c)(4) and 552b(c)(6), Title 5 U.S.C., as amended. The grant applications and the discussions could disclose confidential trade secrets or commercial property such as patentable material, and personal information concerning individuals associated with the grant applications, the disclosure of which would constitute a clearly unwarranted invasion of personal privacy.

Name of Committee: Heart, Lung, and Blood Initial Review Group Clinical Trials Review Committee

Date: June 29–30, 2015

Time: 8:00 a.m. to 5:00 p.m.

Agenda: To review and evaluate grant applications

Place: Residence Inn Bethesda, 7335 Wisconsin Avenue, Bethesda, MD 20814

Contact Person: Keary A Cope, Ph.D. Scientific Review Officer, Office of Scientific Review/DERA National Heart, Lung, and Blood Institute, 6701 Rockledge Drive, Room 7190, Bethesda, MD 20892–7924, 301–435–2222 *copeka@mail.nih.gov*.

(Catalogue of Federal Domestic Assistance Program Nos. 93.233, National Center for Sleep Disorders Research; 93.837, Heart and Vascular Diseases Research; 93.838, Lung Diseases Research; 93.839, Blood Diseases and Resources Research, National Institutes of Health, HHS)

Dated: June 3, 2015.

Michelle Trout,

Program Analyst, Office of Federal Advisory Committee Policy.

[FR Doc. 2015–13961 Filed 6–8–15; 8:45 am]

BILLING CODE 4140–01–P

DEPARTMENT OF HEALTH AND HUMAN SERVICES

National Institutes of Health

Eunice Kennedy Shriver National Institute of Child Health and Human Development: Notice of Closed Meeting

Pursuant to section 10(d) of the Federal Advisory Committee Act, as amended (5 U.S.C. App.), notice is hereby given of the following meeting.

The meeting will be closed to the public in accordance with the provisions set forth in section 552b(c)(4) and 552b(c)(6), Title 5 U.S.C., as amended. The grant applications and the discussions could disclose confidential trade secrets or commercial property such as patentable material, and personal information concerning individuals associated with the grant applications, the disclosure of which would constitute a clearly unwarranted invasion of personal privacy.

Name of Committee: National Institute of Child Health and Human Development Special Emphasis Panel.

Date: July 22, 2015.

Time: 2:00 p.m. to 4:00 p.m.

Agenda: To review and evaluate grant applications.

Place: National Institutes of Health, 6100 Executive Boulevard, Rockville, MD 20852, (Telephone Conference Call).

Contact Person: Sherry L. Dupere, Ph.D., Scientific Review Officer, Scientific Review Branch, Eunice Kennedy Shriver National Institute of Child Health and Human Development, NIH, 6100 Executive Boulevard, Room 5B01, Bethesda, MD 20892–9304, (301) 451–3415, *duperes@mail.nih.gov.*

(Catalogue of Federal Domestic Assistance Program Nos. 93.864, Population Research; 93.865, Research for Mothers and Children; 93.929, Center for Medical Rehabilitation Research; 93.209, Contraception and Infertility Loan Repayment Program, National Institutes of Health, HHS)

Dated: June 3, 2015.

Michelle Trout,

Program Analyst, Office of Federal Advisory Committee Policy.

[FR Doc. 2015–13958 Filed 6–8–15; 8:45 am]

BILLING CODE 4140–01–P

DEPARTMENT OF HOMELAND SECURITY

U.S. Customs and Border Protection

Accreditation and Approval of Bennett Testing Service, Inc., as a Commercial Gauger and Laboratory

AGENCY: U.S. Customs and Border Protection, Department of Homeland Security.

ACTION: Notice of accreditation and approval of Bennett Testing Service, Inc., as a commercial gauger and laboratory.

SUMMARY: Notice is hereby given, pursuant to CBP regulations, that Bennett Testing Service, Inc., has been approved to gauge and accredited to test petroleum and petroleum products for customs purposes for the next three years as of November 3, 2014.

DATES: *Effective Dates:* The accreditation and approval of Bennett Testing Service, Inc., as commercial gauger and laboratory became effective on November 3, 2014. The next triennial inspection date will be scheduled for November 2017.

FOR FURTHER INFORMATION CONTACT: Approved Gauger and Accredited Laboratories Manager, Laboratories and Scientific Services Directorate, U.S. Customs and Border Protection, 1300 Pennsylvania Avenue NW, Suite 1500N, Washington, DC 20229, tel. 202–344–1060.

SUPPLEMENTARY INFORMATION: Notice is hereby given pursuant to 19 CFR 151.12 and 19 CFR 151.13, that Bennett Testing Service, Inc., 1045 E. Hazelwood Ave., Rahway, NJ 07065, has been approved to gauge and accredited to test petroleum and petroleum products for customs purposes, in accordance with the provisions of 19 CFR 151.12 and 19 CFR 151.13. Bennett Testing Service, Inc., is approved for the following gauging procedures for petroleum and certain petroleum products set forth by the American Petroleum Institute (API):

API Chapters	Title
3	Tank gauging.
7	Temperature Determination.
8	Sampling.
12	Calculations.
17	Maritime Measurements.

Bennett Testing Service, Inc., is accredited for the following laboratory analysis procedures and methods for petroleum and certain petroleum products set forth by the U.S. Customs and Border Protection Laboratory Methods (CBPL) and American Society for Testing and Materials (ASTM):

CBPL No.	ASTM	Title
27–48	ASTM D–4052	Standard test method for density and relative density of liquids by digital density meter.

Anyone wishing to employ this entity to conduct laboratory analyses and gauger services should request and receive written assurances from the entity that it is accredited or approved by the U.S. Customs and Border Protection to conduct the specific test or gauger service requested. Alternatively, inquiries regarding the specific test or gauger service this entity is accredited or approved to perform may be directed to the U.S. Customs and Border Protection by calling (202) 344–1060. The inquiry may also be sent to *cbp.labhq@dhs.gov.* Please reference the Web site listed below for a complete listing of CBP approved gaugers and accredited laboratories. *http://www.cbp.gov/about/labs-scientific/commercial-gaugers-and-laboratories*

Dated: June 1, 2015.

Donald A. Cousins,

Director, Scientific Services, Laboratories and Scientific Services Directorate.

[FR Doc. 2015–13993 Filed 6–8–15; 8:45 am]

BILLING CODE 9111–14–P

DEPARTMENT OF HOMELAND SECURITY

Federal Emergency Management Agency

[Docket No. FEMA–2014–0002; Internal Agency Docket No. FEMA–B–1359]

Proposed Flood Hazard Determinations

AGENCY: Federal Emergency Management Agency; DHS.

ACTION: Notice; correction.

SUMMARY: On January 30, 2014, FEMA published in the **Federal Register** a proposed flood hazard determination notice at 79 FR 4949–4950 that contained a table which included a Web

page address through which the Preliminary Flood Insurance Rate Map (FIRM), and where applicable, the Flood Insurance Study (FIS) report for the communities listed in the table could be accessed. The information available through the Web page address has subsequently been updated. The table provided here represents the proposed flood hazard determinations and communities affected for Talbot County, Maryland and Incorporated Areas.

DATES: Comments are to be submitted on or before September 8, 2015.

ADDRESSES: The Preliminary FIRM, and where applicable, the FIS report for each community are available for inspection at both the online location and the respective Community Map Repository address listed in the table below. Additionally, the current effective FIRM and FIS report for each community are accessible online through the FEMA Map Service Center at *www.msc.fema.gov* for comparison.

You may submit comments, identified by Docket No. FEMA–B–1359, to Luis Rodriguez, Chief, Engineering Management Branch, Federal Insurance and Mitigation Administration, FEMA, 500 C Street SW., Washington, DC 20472, (202) 646–4064, or (email) *Luis.Rodriguez3@fema.dhs.gov.*

FOR FURTHER INFORMATION CONTACT: Luis Rodriguez, Chief, Engineering Management Branch, Federal Insurance and Mitigation Administration, FEMA, 500 C Street SW., Washington, DC 20472, (202) 646–4064 or (email) *Luis.Rodriguez3@fema.dhs.gov.*

SUPPLEMENTARY INFORMATION: FEMA proposes to make flood hazard determinations for each community listed in the table below, in accordance with Section 110 of the Flood Disaster Protection Act of 1973, 42 U.S.C. 4104, and 44 CFR 67.4(a).

These proposed flood hazard determinations, together with the floodplain management criteria required by 44 CFR 60.3, are the minimum that are required. They should not be construed to mean that the community must change any existing ordinances that are more stringent in their floodplain management requirements. The community may at any time enact stricter requirements of its own, or pursuant to policies established by other Federal, State, or regional entities. These flood hazard determinations are used to meet the floodplain management requirements of the NFIP and are also used to calculate the appropriate flood insurance premium rates for new buildings built after the FIRM and FIS report become effective.

Use of a Scientific Resolution Panel (SRP) is available to communities in support of the appeal resolution process. SRPs are independent panels of experts in hydrology, hydraulics, and other pertinent sciences established to review conflicting scientific and technical data and provide recommendations for resolution. Use of the SRP may only be exercised after FEMA and local communities have been engaged in a collaborative consultation process for at least 60 days without a mutually acceptable resolution of an appeal. Additional information regarding the SRP process can be found online at *http://www.floodsrp.org/pdfs/srp_fact_sheet.pdf.*

The communities affected by the flood hazard determinations are provided in the table below. Any request for reconsideration of the revised flood hazard determinations shown on the Preliminary FIRM and FIS report that satisfies the data requirements outlined in 44 CFR 67.6(b) is considered an appeal. Comments unrelated to the flood hazard determinations will also be considered before the FIRM and FIS report are made final.

Correction

In the proposed flood hazard determination notice published at 79 FR 4949–4950 in the January 30, 2014, issue of the **Federal Register**, FEMA published a table titled ''Talbot County, Maryland, and Incorporated Areas.'' This table contained a Web page address through which the Preliminary FIRM, and where applicable, FIS report for the communities listed in the table could be accessed online. A Revised Preliminary FIRM and/or FIS report have subsequently been issued for some or all of the communities listed in the table. The information available through the Web page address listed in the table has been updated to reflect the Revised Preliminary information and is to be used in lieu of the information previously available.

(Catalog of Federal Domestic Assistance No. 97.022, ''Flood Insurance.'')

Dated: May 21, 2015.

Roy E. Wright,

Deputy Associate Administrator for Mitigation, Department of Homeland Security, Federal Emergency Management Agency.

Community	Community map repository address
Talbot County, Maryland, and Incorporated Areas	
Maps Available for Inspection Online at: http://www.fema.gov/preliminaryfloodhazarddata	
Town of Easton	Town Hall, 14 South Harrison Street, Easton, MD 21601.
Town of Oxford	Municipal Building, 101 Market Street, Oxford, MD 21654.
Town of St. Michaels	Edgar M. Bosley, Jr. Municipal Building, 300 Mill Street, St. Michaels, MD 21663.
Unincorporated Areas of Talbot County	Talbot County Office of Planning and Permits, 215 Bay Street, Suite 2, Easton, MD 21601.

[FR Doc. 2015–14011 Filed 6–8–15; 8:45 am]

BILLING CODE 9110–12–P

DEPARTMENT OF HOMELAND SECURITY

Federal Emergency Management Agency

[Internal Agency Docket No. FEMA–4216–DR; Docket ID FEMA–2015–0002]

Kentucky; Amendment No. 1 to Notice of a Major Disaster Declaration

AGENCY: Federal Emergency Management Agency, DHS.

ACTION: Notice.

SUMMARY: This notice amends the notice of a major disaster declaration for the Commonwealth of Kentucky (FEMA–4216–DR), dated April 30, 2015, and related determinations.

DATES: *Effective Date:* June 2, 2015.

FOR FURTHER INFORMATION CONTACT: Dean Webster, Office of Response and Recovery, Federal Emergency Management Agency, 500 C Street SW., Washington, DC 20472, (202) 646–2833.

SUPPLEMENTARY INFORMATION: The notice of a major disaster declaration for the Commonwealth of Kentucky is hereby amended to include the following areas among those areas determined to have been adversely affected by the event declared a major disaster by the President in his declaration of April 30, 2015.

Ballard and Wayne Counties for Public Assistance.

Ballard County for snow assistance under the Public Assistance program for any continuous 48-hour period during or proximate the incident period.

The following Catalog of Federal Domestic Assistance Numbers (CFDA) are to be used for reporting and drawing funds: 97.030, Community Disaster Loans; 97.031, Cora Brown Fund; 97.032, Crisis Counseling; 97.033, Disaster Legal Services; 97.034, Disaster Unemployment Assistance (DUA); 97.046, Fire Management Assistance Grant; 97.048, Disaster Housing Assistance to Individuals and Households in Presidentially Declared Disaster Areas; 97.049, Presidentially Declared Disaster Assistance—Disaster Housing Operations for Individuals and Households; 97.050 Presidentially Declared Disaster Assistance to Individuals and Households—Other Needs; 97.036, Disaster Grants—Public Assistance (Presidentially Declared Disasters); 97.039, Hazard Mitigation Grant.

W. Craig Fugate,

Administrator, Federal Emergency Management Agency.

[FR Doc. 2015–14020 Filed 6–8–15; 8:45 am]

BILLING CODE 9111–23–P

DEPARTMENT OF HOMELAND SECURITY

Federal Emergency Management Agency

[Internal Agency Docket No. FEMA–4223–DR; Docket ID FEMA–2015–0002]

Texas; Major Disaster and Related Determinations

AGENCY: Federal Emergency Management Agency, DHS.

ACTION: Notice.

SUMMARY: This is a notice of the Presidential declaration of a major disaster for the State of Texas (FEMA–4223–DR), dated May 29, 2015, and related determinations.

DATES: *Effective Date:* May 29, 2015.

FOR FURTHER INFORMATION CONTACT: Dean Webster, Office of Response and Recovery, Federal Emergency Management Agency, 500 C Street SW., Washington, DC 20472, (202) 646–2833.

SUPPLEMENTARY INFORMATION: Notice is hereby given that, in a letter dated May 29, 2015, the President issued a major disaster declaration under the authority of the Robert T. Stafford Disaster Relief and Emergency Assistance Act, 42 U.S.C. 5121 *et seq.* (the ''Stafford Act''), as follows:

I have determined that the damage in certain areas of the State of Texas resulting from severe storms, tornadoes, straight-line winds, and flooding during the period of May 4, 2015, and continuing, is of sufficient severity and magnitude to warrant a major disaster declaration under the Robert T. Stafford Disaster Relief and Emergency Assistance Act, 42 U.S.C. 5121 *et seq.* (the ''Stafford Act''). Therefore, I declare that such a major disaster exists in the State of Texas.

In order to provide Federal assistance, you are hereby authorized to allocate from funds available for these purposes such amounts as you find necessary for Federal disaster assistance and administrative expenses.

You are authorized to provide Individual Assistance and Public Assistance in the designated areas and Hazard Mitigation throughout the State. Consistent with the requirement that Federal assistance be supplemental, any Federal funds provided under the Stafford Act for Hazard Mitigation and Other Needs Assistance will be limited to 75 percent of the total eligible costs. Federal funds provided under the Stafford Act for Public Assistance also will be limited to 75 percent of the total eligible costs, with the exception of projects that meet the eligibility criteria for a higher Federal cost-sharing percentage under the Public Assistance Alternative Procedures Pilot Program for Debris Removal implemented pursuant to section 428 of the Stafford Act.

Further, you are authorized to make changes to this declaration for the approved assistance to the extent allowable under the Stafford Act.

The time period prescribed for the implementation of section 310(a), Priority to Certain Applications for Public Facility and Public Housing Assistance, 42 U.S.C. 5153, shall be for a period not to exceed six months after the date of this declaration.

The Federal Emergency Management Agency (FEMA) hereby gives notice that pursuant to the authority vested in the Administrator, under Executive Order 12148, as amended, Kevin L. Hannes of FEMA is appointed to act as the Federal Coordinating Officer for this major disaster.

The following areas of the State of Texas have been designated as adversely affected by this major disaster:

Harris, Hays, and Van Zandt Counties for Individual Assistance.

Cooke, Gaines, Grimes, Harris, Hays, Navarro, and Van Zandt Counties for Public Assistance.

All areas within the State of Texas are eligible for assistance under the Hazard Mitigation Grant Program.

The following Catalog of Federal Domestic Assistance Numbers (CFDA) are to be used for reporting and drawing funds: 97.030, Community Disaster Loans; 97.031, Cora Brown Fund; 97.032, Crisis Counseling; 97.033, Disaster Legal Services; 97.034, Disaster Unemployment Assistance (DUA); 97.046, Fire Management Assistance Grant; 97.048, Disaster Housing Assistance to Individuals and Households in Presidentially Declared Disaster Areas; 97.049, Presidentially Declared Disaster Assistance—Disaster Housing Operations for Individuals and Households; 97.050, Presidentially Declared Disaster Assistance to Individuals and Households—Other Needs; 97.036, Disaster Grants—Public Assistance (Presidentially Declared Disasters); 97.039, Hazard Mitigation Grant.

W. Craig Fugate,

Administrator, Federal Emergency Management Agency.

[FR Doc. 2015–14019 Filed 6–8–15; 8:45 am]

BILLING CODE 9111–23–P

DEPARTMENT OF HOMELAND SECURITY

Federal Emergency Management Agency

[Docket ID FEMA–2015–0001; Internal Agency Docket No. FEMA–B–1519]

Changes in Flood Hazard Determinations

AGENCY: Federal Emergency Management Agency, DHS.

ACTION: Notice.

SUMMARY: This notice lists communities where the addition or modification of Base Flood Elevations (BFEs), base flood depths, Special Flood Hazard Area

(SFHA) boundaries or zone designations, or the regulatory floodway (hereinafter referred to as flood hazard determinations), as shown on the Flood Insurance Rate Maps (FIRMs), and where applicable, in the supporting Flood Insurance Study (FIS) reports, prepared by the Federal Emergency Management Agency (FEMA) for each community, is appropriate because of new scientific or technical data. The FIRM, and where applicable, portions of the FIS report, have been revised to reflect these flood hazard determinations through issuance of a Letter of Map Revision (LOMR), in accordance with Title 44, Part 65 of the Code of Federal Regulations (44 CFR part 65). The LOMR will be used by insurance agents and others to calculate appropriate flood insurance premium rates for new buildings and the contents of those buildings. For rating purposes, the currently effective community number is shown in the table below and must be used for all new policies and renewals.

DATES: These flood hazard determinations will become effective on the dates listed in the table below and revise the FIRM panels and FIS report in effect prior to this determination for the listed communities.

From the date of the second publication of notification of these changes in a newspaper of local circulation, any person has 90 days in which to request through the community that the Deputy Associate Administrator for Mitigation reconsider the changes. The flood hazard determination information may be changed during the 90-day period.

ADDRESSES: The affected communities are listed in the table below. Revised flood hazard information for each community is available for inspection at both the online location and the respective community map repository address listed in the table below. Additionally, the current effective FIRM and FIS report for each community are accessible online through the FEMA Map Service Center at *www.msc.fema.gov* for comparison.

Submit comments and/or appeals to the Chief Executive Officer of the community as listed in the table below.

FOR FURTHER INFORMATION CONTACT: Luis Rodriguez, Chief, Engineering Management Branch, Federal Insurance and Mitigation Administration, FEMA, 500 C Street SW., Washington, DC 20472, (202) 646–4064, or (email) *Luis.Rodriguez3@fema.dhs.gov;* or visit the FEMA Map Information eXchange (FMIX) online at *www.floodmaps.fema.gov/fhm/fmx_main.html.*

SUPPLEMENTARY INFORMATION: The specific flood hazard determinations are not described for each community in this notice. However, the online location and local community map repository address where the flood hazard determination information is available for inspection is provided.

Any request for reconsideration of flood hazard determinations must be submitted to the Chief Executive Officer of the community as listed in the table below.

The modifications are made pursuant to section 201 of the Flood Disaster Protection Act of 1973, 42 U.S.C. 4105, and are in accordance with the National Flood Insurance Act of 1968, 42 U.S.C. 4001 *et seq.,* and with 44 CFR part 65.

The FIRM and FIS report are the basis of the floodplain management measures that the community is required either to adopt or to show evidence of having in effect in order to qualify or remain qualified for participation in the National Flood Insurance Program (NFIP).

These flood hazard determinations, together with the floodplain management criteria required by 44 CFR 60.3, are the minimum that are required. They should not be construed to mean that the community must change any existing ordinances that are more stringent in their floodplain management requirements. The community may at any time enact stricter requirements of its own or pursuant to policies established by other Federal, State, or regional entities. The flood hazard determinations are in accordance with 44 CFR 65.4.

The affected communities are listed in the following table. Flood hazard determination information for each community is available for inspection at both the online location and the respective community map repository address listed in the table below. Additionally, the current effective FIRM and FIS report for each community are accessible online through the FEMA Map Service Center at *www.msc.fema.gov* for comparison.

(Catalog of Federal Domestic Assistance No. 97.022, ''Flood Insurance.'')

Dated: May 21, 2015.

Roy E. Wright,

Deputy Associate Administrator for Mitigation, Department of Homeland Security, Federal Emergency Management Agency.

State and county	Location and case No.	Chief executive officer of community	Community map repository	Online location of letter of map revision	Effective date of modification	Community No.
Arizona:						
Gila	City of Globe (15–09–0719P).	The Honorable Terence O. Wheeler, Mayor, City of Globe, 150 North Pine Street, Globe, AZ 85501.	150 North Pine Street, Globe, AZ 85501.	*http://www.msc.fema.gov/lomc.*	Aug. 27, 2015	040029
Gila	Unincorporated areas of Gila County (15–09–0719P).	The Honorable Michael A. Pastor, Chairman, Gila County Board of Supervisors, Gila County Courthouse, 1400 East Ash Street, Globe, AZ 85501.	Gila County Courthouse, 1400 East Ash Street, Globe, AZ 85501.	*http://www.msc.fema.gov/lomc.*	Aug. 27, 2015	040028
Maricopa	City of Goodyear (14–09–4544P).	The Honorable Georgia Lord, Mayor, City of Goodyear, 190 North Litchfield Road, Goodyear, AZ 85338.	City Hall, 190 North Litchfield Road, Goodyear, AZ 85338.	*http://www.msc.fema.gov/lomc.*	Aug. 28, 2015	040046
Maricopa	City of Peoria (14–09–2988P).	The Honorable Cathy Carlat, Mayor, City of Peoria, 8401 West Monroe Street, Peoria, AZ 85345.	City Hall, 8401 West Monroe Street, Peoria, AZ 85345.	*http://www.msc.fema.gov/lomc.*	Jul. 17, 2015	040050
Maricopa	City of Phoenix (15–09–0681P).	The Honorable Greg Stanton, Mayor, City of Phoenix, 200 West Washington Street, Phoenix, AZ 85003.	Street Transportation Department, 200 West Washington Street, 5th Floor, Phoenix, AZ 85345.	*http://www.msc.fema.gov/lomc.*	Jul. 31, 2015	040051
Maricopa	City of Phoenix (15–09–0733P).	The Honorable Greg Stanton, Mayor, City of Phoenix, 200 West Washington Street, Phoenix, AZ 85003.	Street Transportation Department, 200 West Washington Street, 5th Floor, Phoenix, AZ 85003.	*http://www.msc.fema.gov/lomc.*	Aug. 6, 2015	040051
Maricopa	City of Surprise (14–09–3931P).	The Honorable Sharon Wolcott, Mayor, City of Surprise, 16000 North Civic Center Plaza, Surprise, AZ 85374.	Community Development Services, 12425 West Bell Road, Suite D–100, Surprise, AZ 85374.	*http://www.msc.fema.gov/lomc.*	Jul. 10, 2015	040053
Maricopa	Town of Buckeye (14–09–3809P).	The Honorable Jackie A. Meck, Mayor, Town of Buckeye, 530 East Monroe Avenue, Buckeye, AZ 85326.	Town Hall, 100 North Apache Street, Suite A, Buckeye, AZ 85326.	*http://www.msc.fema.gov/lomc.*	Jun. 19, 2015	040039
Maricopa	Town of Buckeye (15–09–0487P).	The Honorable Jackie A. Meck, Mayor, Town of Buckeye, 530 East Monroe Avenue, Buckeye, AZ 85326.	Town Hall, 100 North Apache Street, Suite A, Buckeye, AZ 85326.	*http://www.msc.fema.gov/lomc.*	Aug. 7, 2015	040039
Maricopa	Unincorporated areas of Maricopa County (14–09–3931P).	The Honorable Steve Chucri, Chairman, Maricopa County Board of Supervisors, 301 West Jefferson Street, 10th Floor, Phoenix, AZ 85003.	Flood Control District of Maricopa County, 2801 West Durango Street, Phoenix, AZ 85009.	*http://www.msc.fema.gov/lomc.*	Jul. 10, 2015	040037
Maricopa	Unincorporated areas of Maricopa County (14–09–3809P).	The Honorable Steve Chucri, Chairman, Maricopa County, Board of Supervisors, 301 West Jefferson Street, 10th Floor, Phoenix, AZ 85003.	Maricopa County Flood Control District, 2801 West Durango Street, Phoenix, AZ 85009.	*http://www.msc.fema.gov/lomc.*	Jun. 19, 2015	040037
Maricopa	Unincorporated areas of Maricopa County (15–09–0581P).	The Honorable Denny Barney, Chairman, Maricopa County, Board of Supervisors, 301 West Jefferson Street, Phoenix, AZ 85003.	Flood Control District of Maricopa County, 2801 West Durango Street, Phoenix, AZ 85009.	*http://www.msc.fema.gov/lomc.*	Jul. 17, 2015	040037
Maricopa	Unincorporated areas of Maricopa County (14–09–4544P).	The Honorable Steve Chucri, Chairman, Maricopa County, Board of Supervisors, 301 West Jefferson Street, 10th Floor, Phoenix, AZ 85003.	Flood Control District of Maricopa County, 2801 West Durango Street, Phoenix, AZ 85009.	*http://www.msc.fema.gov/lomc.*	Aug. 28, 2015	040037
Maricopa	Unincorporated areas of Maricopa County (14–09–2988P).	The Honorable Denny Barney, Chairman, Maricopa County, Board of Supervisors, 301 West Jefferson Street, 10th Floor, Phoenix, AZ 85003.	Flood Control District of Maricopa County, 2801 West Durango Street, Phoenix, AZ 85009.	*http://www.msc.fema.gov/lomc.*	Jul. 17, 2015	040037
Mohave	Unincorporated areas of Mohave County (15–09–1030P).	The Honorable Steven C. Moss, Chairman, Mohave County Board of Supervisors, 700 West Beale Street, Kingman, AZ 86402.	City Administration Building, 700 West Beale Street Kingman, AZ 86401.	*http://www.msc.fema.gov/lomc.*	Aug. 25, 2015	040058
Pima	Town of Oro Valley (14–09–4165P).	The Honorable Satish Hiremath, Mayor, Town of Oro Valley, 11000 North La Canada Drive, Oro Valley, AZ 85737.	Planning and Zoning Department, 11000 North La Canada Drive, Oro Valley, AZ 85737.	*http://www.msc.fema.gov/lomc.*	Aug. 10, 2015	040109
Pima	Unincorporated areas of Pima County (15–09–0406P).	The Honorable Sharon Bronson, Chair, Pima County Board of Supervisors, 130 West Congress Street, 11th Floor, Tucson, AZ 85701.	Pima County Flood Control District, 97 East Congress Street, 3rd Floor, Tucson, AZ 85701.	*http://www.msc.fema.gov/lomc.*	Aug. 19, 2015	040073

State and county	Location and case No.	Chief executive officer of community	Community map repository	Online location of letter of map revision	Effective date of modification	Community No.
Pinal	City of Maricopa (15–09–0819P).	The Honorable Christian Price, Mayor, City of Maricopa, 39700 West Civic Center Plaza, Maricopa, AZ 85138.	City Hall, 45145 West Madison Avenue, Maricopa, AZ 85139.	*http://www.msc.fema.gov/lomc.*	Aug. 21, 2015	040052
Pinal	Town of Florence (15–09–0025P)..	The Honorable Tom J. Rankin Mayor, Town of Florence, P.O. Box 2670, Florence, AZ 85132.	Department of Public Works, 425 East Ruggles Florence, AZ 85132.	*http://www.msc.fema.gov/lomc.*	Jul. 10, 2015	040084
Pinal	Town of Florence (15–09–0582P).	The Honorable Tom J. Rankin, Mayor, Town of Florence, P.O. Box 2670, Florence, AZ 85132.	Department of Public Works, 425 East Ruggles, Florence, AZ 85132.	*http://www.msc.fema.gov/lomc.*	Aug. 28, 2015	040084
Pinal	Unincorporated areas of Pinal County (15–09–0025P).	The Honorable Cherly Chase, Chair, Pinal County Board of Supervisors, P.O. Box 827, Florence, AZ 85132.	Pinal County Engineering Department, 31 North Pinal Street, Building F, Florence, AZ 85132.	*http://www.msc.fema.gov/lomc.*	Jul. 10, 2015	040077
Yavapai	City of Cottonwood (14–09–4202P).	The Honorable Diane Joens, Mayor, City of Cottonwood, 827 North Main Street, Cottonwood, AZ 86326.	Public Works Department, 1490 West Mingus Avenue, Cottonwood, AZ 86326.	*http://www.msc.fema.gov/lomc.*	Aug. 20, 2015	040096
California:						
Kern	City of Shafter (15–09–0191P).	The Honorable Cathy Prout, Mayor, City of Shafter, 336 Pacific Avenue, Shafter, CA 93263.	City Services, 336 Pacific Avenue, Shafter, CA 93263.	*http://www.msc.fema.gov/lomc.*	Jul. 16, 2015	060082
Placer	City of Rocklin (15–09–0659P).	The Honorable George Magnuson, Mayor, City of Rocklin, 3970 Rocklin Road, Rocklin, CA 95677.	Engineering Division, 4081 Alvis Court, Rocklin, CA 95677.	*http://www.msc.fema.gov/lomc.*	Aug. 21, 2015	060242
Riverside	City of Murrieta (15–09–1205P).	The Honorable Harry Ramos, Mayor, City of Murrieta, 1 Town Square, Murrieta, CA 92562.	Department of Public Works and Engineering, One Town Square, Murrieta, CA 92562.	*http://www.msc.fema.gov/lomc.*	Aug. 19, 2015	060751
Riverside	City of Norco (15–09–0162P).	The Honorable Herb Higgins, Mayor, City of Norco, 2870 Clark Avenue, Norco, CA 92860.	City Hall, 2870 Clark Avenue, Norco, CA 92860.	*http://www.msc.fema.gov/lomc.*	Jul. 3, 2015	060256
San Bernardino	City of San Bernardino (14–09–2935P).	The Honorable R. Carey Davis, Mayor, City of San Bernardino, 300 North D Street, 6th Floor, San Bernardino, CA 92418.	Water Department, 399 Chandler Place, San Bernardino, CA 92408.	*http://www.msc.fema.gov/lomc.*	Aug. 24, 2015	060281
San Diego	City of San Diego (14–09–3825P).	The Honorable Kevin L. Faulconer, Mayor, City of San Diego, 202 C Street, 11th Floor, San Diego, CA 92101.	Development Services Center, 1222 1st Avenue, 3rd Floor, San Diego, CA 92101.	*http://www.msc.fema.gov/lomc.*	Jul. 17, 2015	060295
San Diego	Unincorporated areas of San Diego County (14–09–4066P).	The Honorable Bill Horn, Chairman, San Diego County Board of Supervisors, 1600 Pacific Highway, Room 335, San Diego, CA 92101.	Department of Public Works, Flood Control, 5510 Overland Avenue, Suite 410, San Diego, CA 92123.	*http://www.msc.fema.gov/lomc.*	Aug. 21, 2015	060284
San Mateo	City of Foster City (15–09–0526P).	The Honorable Art Kiesel, Mayor, City of Foster City, 610 Foster City Boulevard, Foster City, CA 94404.	City Hall, 610 Foster City Boulevard, Foster City, CA 94404.	*http://www.msc.fema.gov/lomc.*	Aug. 6, 2015	060318
San Mateo	City of San Mateo (15–09–0526P).	The Honorable Maureen Freschet, Mayor, City of San Mateo, 330 West 20th Avenue, San Mateo, CA 94403.	City Hall, 330 West 20th Avenue, San Mateo, CA 94403.	*http://www.msc.fema.gov/lomc.*	Aug. 6, 2015	060328
Ventura	City of Ojai (14–09–1496P).	The Honorable Carlon Strobel, Mayor, City of Ojai, P.O. Box 1570, Ojai, CA 93024.	City Hall, 401 South Ventura Street, Ojai, CA 93024.	*http://www.msc.fema.gov/lomc.*	Jun. 29, 2015	060416
Ventura	City of Oxnard (15–09–1117P).	The Honorable Timothy B. Flynn, Mayor, City of Oxnard, 305 West 3rd Street, Oxnard, CA 93030.	Public Works/Development Services, 305 West 3rd Street, Oxnard, CA 93030.	*http://www.msc.fema.gov/lomc.*	Aug. 14, 2015	060417
Ventura	City of Simi Valley (14–09–3759P).	The Honorable Bob Huber, Mayor, City of Simi Valley, 2929 Tapo Canyon Road, Simi Valley, CA 93063.	Public Works Department, 2929 Tapo Canyon Road, Simi Valley, CA 93063.	*http://www.msc.fema.gov/lomc.*	Jul. 17, 2015	060421
Ventura	City of Simi Valley (14–09–3760P).	The Honorable Bob Huber, Mayor, City of Simi Valley, 2929 Tapo Canyon Road, Simi Valley, CA 93063.	Public Works Department, 2929 Tapo Canyon Road, Simi Valley, CA 93063.	*http://www.msc.fema.gov/lomc.*	Jul. 17, 2015	060421
Ventura	Unincorporated areas of Ventura County (14–09–1496P).	The Honorable Steve Bennett, Chairman, Ventura County Board of Supervisors, 800 South Victoria Avenue, Ventura, CA 93009.	Hall of Administration, 800 South Victoria Avenue, Ventura, CA 93009.	*http://www.msc.fema.gov/lomc.*	Jun. 29, 2015	060413

Ventura	Unincorporated areas of Ventura County (15–09–1117P).	The Honorable Kathy I. Long, Chair, Venura County Board of Supervisors, 800 South Victoria Avenue, Ventura, CA 93009.	Ventura County Hall of Administration, Public Works Agency: Permit Counter, 800 South Victoria Avenue, Ventura, CA 93009.	*http://www.msc.fema.gov/lomc.*	Aug. 14, 2015	060413
Ventura	Unincorporated areas of Ventura County (14–09–3759P).	The Honorable Kathy I. Long Chair, Ventura County Board of Supervisors, 800 South Victoria Avenue, Ventura, CA 93009.	Ventura County Hall of Administration Public Works Agency: Permit Counter, 800 South Victoria Avenue Ventura, CA 93009.	*http://www.msc.fema.gov/lomc.*	Jul. 17, 2015	060413
Ventura	Unincorporated areas of Ventura County (14–09–3760P).	The Honorable Kathy I. Long, Chair, Ventura County Board of Supervisors, 800 South Victoria Avenue, Ventura, CA 93009.	Ventura County Hall of Administration, Public Works Agency: Permit Counter, 800 South Victoria Avenue, Ventura, CA 93009.	*http://www.msc.fema.gov/lomc.*	Jul. 17, 2015	060413
Nevada:						
Clark	City of Henderson (15–09–0701P).	The Honorable Andy A. Hafen, Mayor, City of Henderson, 240 Water Street, Henderson, NV 89015.	Public Works Department, 240 Water Street, Henderson, NV 89015.	*http://www.msc.fema.gov/lomc.*	Aug. 24, 2015	320005
Clark	City of Henderson (15–09–0720P).	The Honorable Andy A. Hafen, Mayor, City of Henderson, 240 Water Street, Henderson, NV 89015.	Public Works Department, 240 Water Street, Henderson, NV 89015.	*http://www.msc.fema.gov/lomc.*	Aug. 24, 2015	320005
Clark	Unincorporated areas of Clark County (15–09–0720P).	The Honorable Steve Sisolak, Chairman, Clark County Board of Commissioners, 500 South Grand Central Parkway, 6th Floor, Las Vegas, NV 89155.	Office of the Director of Public Works, 500 Grand Central Parkway, Las Vegas, NV 89155.	*http://www.msc.fema.gov/lomc.*	Aug. 24, 2015	320003
Clark	Unincorporated areas of Clark County (15–09–1167P).	The Honorable Steve Sisolak, Chairman, Clark County Board of Commissioners, 500 South Grand Central Parkway, Las Vegas, NV 89155.	Office of the Director of Public Works, 550 Grand Central Parkway, Las Vegas, NV 89015.	*http://www.msc.fema.gov/lomc.*	Dec. 3, 2015	320003
Douglas	Unincorporated areas of Douglas County (15–09–0570P).	The Honorable Doug N. Johnson, Chairman, Douglas County Board of Commissioners, 1616 8th Street, Minden, NV 89423.	Douglas County Public Works Department, 1615 8th Street, Minden, NV 89423.	*http://www.msc.fema.gov/lomc.*	Jul. 30, 2015	320008
Washoe	Unincorporated areas of Washoe County (14–09–3181P).	The Honorable Marsha Berkbigler, Chair, Washoe County Board of Commissioners, P. O. Box 11130, Reno, NV 89520.	Washoe County Administration Building, Department of Public Works, 1001 East Ninth Street, Reno, NV 89512.	*http://www.msc.fema.gov/lomc.*	Jul. 31, 2015	320019

[FR Doc. 2015–14012 Filed 6–8–15; 8:45 am]
BILLING CODE 9110–12–P

DEPARTMENT OF HOMELAND SECURITY

Federal Emergency Management Agency

[Docket ID FEMA–2015–0001; Internal Agency Docket No. FEMA–B–1516]

Changes in Flood Hazard Determinations

AGENCY: Federal Emergency Management Agency, DHS.

ACTION: Notice.

SUMMARY: This notice lists communities where the addition or modification of Base Flood Elevations (BFEs), base flood depths, Special Flood Hazard Area (SFHA) boundaries or zone designations, or the regulatory floodway (hereinafter referred to as flood hazard determinations), as shown on the Flood Insurance Rate Maps (FIRMs), and where applicable, in the supporting Flood Insurance Study (FIS) reports, prepared by the Federal Emergency Management Agency (FEMA) for each community, is appropriate because of new scientific or technical data. The FIRM, and where applicable, portions of the FIS report, have been revised to reflect these flood hazard determinations through issuance of a Letter of Map Revision (LOMR), in accordance with Title 44, Part 65 of the Code of Federal Regulations (44 CFR part 65). The LOMR will be used by insurance agents and others to calculate appropriate flood insurance premium rates for new buildings and the contents of those buildings. For rating purposes, the currently effective community number is shown in the table below and must be used for all new policies and renewals.

DATES: These flood hazard determinations will become effective on the dates listed in the table below and revise the FIRM panels and FIS report in effect prior to this determination for the listed communities.

From the date of the second publication of notification of these changes in a newspaper of local circulation, any person has 90 days in which to request through the community that the Deputy Associate Administrator for Mitigation reconsider the changes. The flood hazard determination information may be changed during the 90-day period.

ADDRESSES: The affected communities are listed in the table below. Revised flood hazard information for each community is available for inspection at both the online location and the respective community map repository address listed in the table below. Additionally, the current effective FIRM and FIS report for each community are accessible online through the FEMA Map Service Center at *www.msc.fema.gov* for comparison.

Submit comments and/or appeals to the Chief Executive Officer of the community as listed in the table below.

FOR FURTHER INFORMATION CONTACT: Luis Rodriguez, Chief, Engineering Management Branch, Federal Insurance and Mitigation Administration, FEMA, 500 C Street SW., Washington, DC 20472, (202) 646–4064, or (email) *Luis.Rodriguez3@fema.dhs.gov;* or visit the FEMA Map Information eXchange (FMIX) online at *www.floodmaps.fema.gov/fhm/fmx_main.html.*

SUPPLEMENTARY INFORMATION: The specific flood hazard determinations are not described for each community in this notice. However, the online location and local community map repository address where the flood hazard determination information is available for inspection is provided.

Any request for reconsideration of flood hazard determinations must be submitted to the Chief Executive Officer of the community as listed in the table below.

The modifications are made pursuant to section 201 of the Flood Disaster Protection Act of 1973, 42 U.S.C. 4105, and are in accordance with the National Flood Insurance Act of 1968, 42 U.S.C. 4001 *et seq.,* and with 44 CFR part 65.

The FIRM and FIS report are the basis of the floodplain management measures that the community is required either to adopt or to show evidence of having in effect in order to qualify or remain qualified for participation in the National Flood Insurance Program (NFIP).

These flood hazard determinations, together with the floodplain management criteria required by 44 CFR 60.3, are the minimum that are required. They should not be construed to mean that the community must change any existing ordinances that are more stringent in their floodplain management requirements. The community may at any time enact stricter requirements of its own or pursuant to policies established by other Federal, State, or regional entities. The flood hazard determinations are in accordance with 44 CFR 65.4.

The affected communities are listed in the following table. Flood hazard determination information for each community is available for inspection at both the online location and the respective community map repository address listed in the table below. Additionally, the current effective FIRM and FIS report for each community are accessible online through the FEMA Map Service Center at *www.msc.fema.gov* for comparison.

(Catalog of Federal Domestic Assistance No. 97.022, ''Flood Insurance.'')

Dated: May 21, 2015.

Roy E. Wright,

Deputy Associate Administrator for Mitigation, Department of Homeland Security, Federal Emergency Management Agency.

State and county	Location and case No.	Chief executive officer of community	Community map repository	Online location of letter of map revision	Effective date of modification	Community No.
Arizona:						
Pima	Town of Marana (14–09–3397P)	Mr. Gilbert Davidson, Manager, Town of Marana, 11555 West Civic Center Drive, Marana, AZ 85653.	Municipal Complex, 11555 West Civic Center Drive, Marana, AZ 85653.	*http://www.msc.fema.gov/lomc*	Aug. 24, 2015	040118
Pima	Unincorporated areas of Pima County. (14–09–3397P)	Mr. Chuck Huckelberry, Pima County Administrator, 130 West Congress Street, 10th Floor, Tucson, AZ 85701.	Pima County Regional, Flood Control District, 97 East Congress Street, Tucson, AZ 85701.	*http://www.msc.fema.gov/lomc*	Aug. 24, 2015	040073
Arkansas:						

State and county	Location and case No.	Chief executive officer of community	Community map repository	Online location of letter of map revision	Effective date of modification	Community No.
Drew	City of Monticello (14–06–3181P)	The Honorable Zackery Tucker, Mayor, City of Monticello, P.O. Box 505, Monticello, AR 71657.	City Hall, 203 West Gaines Street, Monticello, AR 71655.	*http://www.msc.fema.gov/lomc*	Aug. 13, 2015	050074
Drew	Unincorporated areas of Drew County. (14–06–3181P)	The Honorable Robert Akin, Drew County Judge, 210 South Main Street, Monticello, AR 71655.	Drew County Courthouse, 210 South Main Street, Monticello, AR 71655.	*http://www.msc.fema.gov/lomc*	Aug. 13, 2015	050430
Pennsylvania:						
Delaware	Township of Edgmont. (14–03–3292P)	The Honorable Ronald Gravina, Chairman, Township of Edgmont Board of Supervisors, 1000 Gradyville Road, Gradyville, PA 19039.	Edgmont Township, Municipal Building, 1000 Gradyville Road, Gradyville, PA 19039.	*http://www.msc.fema.gov/lomc*	Jul. 9, 2015	420414
Luzerne	Borough of Dallas. (14–03–0189P)	The Honorable Lee W. Eckert, Borough Council President, 25 Main Street, Dallas, PA 18612.	Borough Administration Building, 25 Main Street, Dallas, PA 18612.	*http://www.msc.fema.gov/lomc*	Aug. 20, 2015	421825
Texas:						
Bell	City of Killeen (14–06–4047P)	The Honorable Scott Cosper, Mayor, City of Killeen, P.O. Box 1329, Killeen, TX 76540.	Building and Inspections Division, 100 East Avenue C, Killeen, TX 76541.	*http://www.msc.fema.gov/lomc*	Jul. 9, 2015	480031
Bell	Unincorporated areas of Bell County. (14–06–4047P)	The Honorable Jon. H. Burrows, Bell County Judge, P.O. Box 768, Belton, TX 76513.	Bell County Engineer's Office, 206 North Main Street, Belton, TX 76513.	*http://www.msc.fema.gov/lomc*	Jul. 9, 2015	480706
Bell	City of Nolanville (14–06–2754P)	The Honorable Dennis Biggs, Mayor, City of Nolanville, P.O. Box 128, Nolanville, TX 76559.	City Hall, 101 North 5th Street, Nolanville, TX 76559.	*http://www.msc.fema.gov/lomc*	Jul. 13, 2015	480032
Bexar	City of San Antonio. (15–06–1148P)	The Honorable Ivy R. Taylor, Mayor, City of San Antonio, P.O. Box 839966, San Antonio, TX 78283.	Transportation and Capital Improvements Department, Storm Water Division, 1901 South Alamo Street, 2nd Floor, San Antonio, TX 78204.	*http://www.msc.fema.gov/lomc*	Aug. 19, 2015	480045
Bexar	City of San Antonio. (14–06–3050P)	The Honorable Ivy R. Taylor, Mayor, City of San Antonio, P.O. Box 839966, San Antonio, TX 78283.	Transportation and Capital Improvements Department, Storm Water Division, 1901 South Alamo Street, 2nd Floor, San Antonio, TX 78204.	*http://www.msc.fema.gov/lomc*	Jul. 28, 2015	480045
Bexar	City of San Antonio. (14–06–3615P)	The Honorable Ivy R. Taylor, Mayor, City of San Antonio, P.O. Box 839966, San Antonio, TX 78283.	Transportation and Capital Improvements Department, Storm Water Division, 1901 South Alamo Street, 2nd Floor, San Antonio, TX 78204.	*http://www.msc.fema.gov/lomc*	Jul. 16, 2015	480045
Bexar	City of San Antonio. (15–06–0336P)	The Honorable Ivy R. Taylor, Mayor, City of San Antonio, P.O. Box 839966, San Antonio, TX 78283.	Transportation and Capital Improvements Department, Storm Water Division, 1901 South Alamo Street, 2nd Floor, San Antonio, TX 78204.	*http://www.msc.fema.gov/lomc*	Jul. 27, 2015	480045
Bexar	Unincorporated areas of Bexar County. (15–06–0336P)	The Honorable Nelson W. Wolff, Bexar County Judge, Paul Elizondo Tower, 101 West Nueva Street, 10th Floor, San Antonio, TX 78205.	Bexar County Public Works Department, 233 North Pecos-La Trinidad Street, Suite 420, San Antonio, TX 78207.	*http://www.msc.fema.gov/lomc*	Jul. 27, 2015	480035
Brazoria	City of Pearland (14–06–3203P)	The Honorable Tom Reid, Mayor, City of Pearland, 3519 Liberty Drive, Pearland, TX 77581.	City Hall Annex, 3523 Liberty Drive, Pearland, TX 77581.	*http://www.msc.fema.gov/lomc*	Jul. 31, 2015	480077

State and county	Location and case No.	Chief executive officer of community	Community map repository	Online location of letter of map revision	Effective date of modification	Community No.
Denton	City of Highland Village. (14–06–4109P)	The Honorable Charlotte Wilcox, Mayor, City of Highland Village, 1000 Highland Village Road, Highland Village, TX 75077.	City Hall, 1000 Highland Village Road, Highland Village, TX 75077.	*http://www.msc.fema.gov/lomc*	Aug. 6, 2015	481105
Harris	Unincorporated areas of Harris County. (14–06–2578P)	The Honorable Edward M. Emmett, Harris County Judge, 1001 Preston Street, Suite 911, Houston, TX 77002.	Harris County Permit Office, 10555 Northwest Freeway, Suite 120, Houston, TX 77092.	*http://www.msc.fema.gov/lomc*	Jul. 13, 2015	480287
Hays	City of San Marcos. (14–06–1023P)	The Honorable Daniel Guerrero, Mayor, City of San Marcos, 630 East Hopkins Street, San Marcos, TX 78666.	Permit Center Building, 630 East Hopkins Street, San Marcos, TX 78666.	*http://www.msc.fema.gov/lomc*	Aug. 5, 2015	485505
Parker	City of Weatherford. (15–06–0035P)	The Honorable Dennis Hooks, Mayor, City of Weatherford, 303 Palo Pinto Street, Weatherford, TX 76086.	Utility Department Service Center, 917 Eureka Street, Weatherford, TX 78086.	*http://www.msc.fema.gov/lomc*	Jul. 23, 2015	480522
Rockwall	City of Rockwall (14–06–4684P)	The Honorable Jim Pruitt, Mayor, City of Rockwall, 385 South Goliad Street, Rockwall, TX 75087.	Engineering Department, 385 South Goliad Street, Rockwall, TX 75087.	*http://www.msc.fema.gov/lomc*	Jul. 13, 2015	480547
Tarrant	City of Fort Worth. (14–06–3505P)	The Honorable Betsy Price, Mayor, City of Fort Worth, 1000 Throckmorton Street, Fort Worth, TX 76102.	City Hall, 1000 Throckmorton Street, Fort Worth, TX 76102.	*http://www.msc.fema.gov/lomc*	Jul. 29, 2015	480596
Virginia: Fauquier	Unincorporated areas of Fauquier County. (14–03–2615P)	Mr. Paul McCulla, Fauquier County Administrator, 10 Hotel Street, Suite 204, Warrenton, VA 20186.	Fauquier County Zoning and Development Services, Department of Community Develpment, 29 Ashby Street, Suite 310, Warrenton, VA 20186.	*http://www.msc.fema.gov/lomc*	Jul. 30, 2015	510055
West Virginia: Kanawha	Unincorporated areas of Kanawha County. (15–03–0904P)	The Honorable W. Kent Carper, President, Kanawha County Commission, P.O. Box 3227, Charleston, WV 25336.	Kanawha County Annex Building, 407 Virginia Street East, Charleston, WV 25301.	*http://www.msc.fema.gov/lomc*	Jul. 6, 2015	540070

[FR Doc. 2015–14013 Filed 6–8–15; 8:45 am]

BILLING CODE 9110–12–P

DEPARTMENT OF HOMELAND SECURITY

Notice of Intent To Delete a System of Records

AGENCY: U.S. Department of Homeland Security.

ACTION: Notice to delete a System of Records.

SUMMARY: The Federal Protective Service, a sub-component of the Department of Homeland Security is deleting a system of records subject to the Privacy Act of 1974, as amended. The system of records being deleted is the Federal Protective System Information Support Tracking System (FISTS).

DATES: FISTS will be decommissioned on July 15, 2015. Data will not be writable or accessible after July 14, 2015.

FOR FURTHER INFORMATION CONTACT: Francis M. Crotty, (202) 732–0264.

Dated: June 1, 2015.

Ricci Mulligan,

Deputy Director, Resource Management, Federal Protective Service.

[FR Doc. 2015–14009 Filed 6–8–15; 8:45 am]

BILLING CODE P

DEPARTMENT OF HOMELAND SECURITY

Notice of Availability for the First Responder Guidance for Improving Survivability in Improvised Explosive Device and/or Active Shooter Incidents

AGENCY: Office of Health Affairs, DHS.

ACTION: Notice of Availability.

SUMMARY: The Department of Homeland Security Office of Health Affairs is making available to the public a guidance document titled, ''First Responder Guidance for Improving Survivability in Improvised Explosive Device and/or Active Shooter Incidents.''

This document is available on the following DHS Web site: *http://www.dhs.gov/publication/iedactive-shooter-guidance-first-responders.*

SUPPLEMENTARY INFORMATION:

At the request of first responders and first receivers who have encountered mass casualties from Improvised Explosive Devices (IEDs) and/or active shooter incidents, this document was developed to provide guidance on how to better approach these incidents. This multi-disciplinary, Federal first responder guidance translates evidence-based response strategies from the U.S. military's vast experience in responding to and managing casualties from IED and/or active shooter incidents into the civilian first responder environment. Additionally, civilian best practices and lessons learned from similar incidents, both in the United States and abroad, are incorporated into this guidance. The recommendations presented—early, aggressive hemorrhage control; use of

protective equipment (which includes ballistic vests, helmets, and eyewear); and greater first responder interoperability and incident management—will help to save lives by mitigating first responder risk and improving the emergent and immediate medical management of casualties encountered during IED and/or active shooter incidents.

FOR FURTHER INFORMATION CONTACT: William Seifarth, DHS Office of Health Affairs, telephone: 202–254–6077 or email: *william.seifarth@dhs.gov..*

Dated: June 3, 2015.

William Seifarth,

Deputy Director (Acting), Workforce Health and Medical Support Division, DHS Office of Health Affairs.

[FR Doc. 2015–14010 Filed 6–8–15; 8:45 am]

BILLING CODE 9110–9K–P

DEPARTMENT OF HOUSING AND URBAN DEVELOPMENT

[Docket No. FR–5879–N–01]

The Third United Nations Conference on Housing and Sustainable Urban Development, Solicitation of Expressions of Interest From Technical Experts and Organizations to Co-Lead Policy Units

AGENCY: Office of the Assistant Secretary for Policy Development and Research, HUD.

ACTION: Notice.

SUMMARY: The Third United Nations Conference on Housing and Sustainable Urban Development (referred to as Habitat III) will be held in Quito, Ecuador, from October 17 through 20, 2016. HUD, in coordination with the U.S. Department of State and other Federal agencies, is leading the United States' preparatory efforts for Habitat III. As part of the preparatory process, the Secretary-General of Habitat III is seeking technical experts to serve as members of 10 policy units to co-lead those policy units. This notice seeks expressions of interest from technical experts who meet the criteria described in this notice, and from organizations wishing to co-lead policy units. Expressions of interest should be submitted to *Leopold.E.Wetula@hud.gov.*

DATES: Expressions of interest will be solicited through June 11, 2015.

FOR FURTHER INFORMATION CONTACT: Leo Wetula, Office of International and Philanthropic Innovation, Office of Policy Development and Research, Department of Housing and Urban Development, 4517th Street SW., Washington, DC 20410; telephone (202) 402–6970 (this is not a toll-free number). Persons with hearing or speech impairments may access this number through TTY by calling the toll-free Federal Relay Service at 800–877–8339.

SUPPLEMENTARY INFORMATION:

I. Background

The United Nations General Assembly decided to convene the Habitat III Conference to reinvigorate the global commitment to sustainable urbanization, to focus on the implementation of a ''New Urban Agenda'', building on the Habitat Agenda of Istanbul in 1996. Member States of the General Assembly decided that the objectives of the Conference are to secure renewed political commitment for sustainable urban development, assess accomplishments to date, address poverty, and identify and address new and emerging challenges. The expectation is that the conference will result in a concise, focused, forward-looking and action-oriented outcome document. Habitat III will be one of the first United Nations global summits after the adoption of the Post-2015 Development Agenda and offers a unique opportunity to discuss the important challenge of how cities, towns, and villages are planned and managed, in order to fulfill their role as drivers of sustainable development.[1]

As noted in the Summary of this notice, HUD, in coordination with the U.S. Department of State and other Federal agencies, is leading the United States' preparatory efforts for Habitat III. Part of this preparatory effort is to help identify technical experts to serve as members of 10 policy units to co-lead those policy units. Policy units refer to groups of individual experts from a variety of fields, including academia, government, civil society and other regional and international bodies, and are charged with identifying challenges, policy priorities, and critical issues as well as develop action-oriented recommendations for the implementation of the New Urban Agenda. The issues to be addressed by each policy unit will serve as technical inputs for Member States' consideration in the preparation of the outcome document of the Conference.

For Habitat III, the Conference plans to establish 10 policy units that will be composed of 20 technical experts, including participants from academia, government, civil society and other regional and international bodies, ensuring diversity and geographical representation. Each policy unit will be co-led by two organizations. A list and descriptions of the policy units can be found on the Habitat III Web site.[2]

II. Solicitation of Interests

A. Solicitation of Interests From Technical Experts

On behalf of Habitat III, HUD is soliciting expressions of interest from qualified technical experts, whose names will be forward to Habitat III for consideration for appointment to one of the policy units. The general selection criteria, as established by Habitat III, cover the following three broad categories:

- Demonstrable Competence;
- Geographical Balance; and
- Gender Balance.

More information on the selection process can be found in Habitat III's Annex I (Selection Process and Criteria). Other information on serving as a technical expert, including duties and responsibilities, can be found in Habitat III's Annex II (Terms of Reference for Experts). Requests for copies of these annexes should be sent to *Leopold.E.Wetula@hud.gov.*

B. Solicitation of Organizations Seeking To Co-Lead Policy Units

On behalf of Habitat III, HUD is also soliciting expressions of interest from organizations wishing to co-lead the 10 policy units. Each policy unit will be co-led by two organizations appointed by the Secretary General of the Conference. Information on selection criteria for co-leading organizations can be found in Habitat III's Annex I and Annex III (Terms of Reference for Co-leading Organizations. Again, requests for copies of these annexes should be sent to *Leopold.E.Wetula@hud.gov.*

All expressions of interest to serve as co-leading organizations should provide basic contact information, and should identify the policy unit or units of which the organization is interested in co-leading.

C. Selection of Technical Experts and Co-Leading Organizations

The Secretary General of Habitat III will make all decisions regarding the appointment of technical experts to policy units and the selection of co-leading organizations.

[1] See *http://unhabitat.org/habitat-iii/.*

[2] See *http://unhabitat.org/wp-content/uploads/2015/04/Habitat-III-Issue-Papers-and-Policy-Units_11-April.pdf.*

Dated: June 3, 2015.

Salin G. Geervarghese,

Deputy Assistant Secretary for International and Philanthropic Innovation.

[FR Doc. 2015–14035 Filed 6–8–15; 8:45 a.m.]

BILLING CODE 4210–67–P

DEPARTMENT OF THE INTERIOR

Bureau of Land Management

[CACA 049584, LLCAD015000.L51010000. ER0000.15X.LVRWB09B3130]

Notice of Availability of a Proposed Land Use Plan Amendment and Final Environmental Impact Statement and Final Environmental Impact Report for the Proposed Soda Mountain Solar Project, San Bernardino County, CA

AGENCY: Bureau of Land Management, Interior.

ACTION: Notice.

SUMMARY: In accordance with the National Environmental Policy Act of 1969, as amended (NEPA), and the Federal Land Policy and Management Act of 1976, as amended, the Bureau of Land Management (BLM) Barstow Field Office, Barstow, California, has prepared a Proposed California Desert Conservation Area (CDCA) Plan Amendment and Joint Final Environmental Impact Statement (EIS) and Environmental Impact Report (EIR) in cooperation with San Bernardino County for the Soda Mountain Solar Project (Project), and by this notice is announcing their availability. The Proposed Project is a 358 megawatt (MW) photovoltaic (PV) solar energy generation facility, along with supporting infrastructure, in rural San Bernardino County. After review, the BLM's Preferred Alternative identified in the Final EIS excludes the proposed northern solar array, includes the Applicant Proposed alignment for Rasor Road, and excludes the proposed brine ponds associated with reverse osmosis treatment of groundwater. The BLM's Preferred Alternative would reduce the Project size from 2,557 to 1,923 acres, and decrease the Project's output from 358 to 264 MW.

DATES: BLM planning regulations state that any person who meets the conditions as described in the regulations may protest the BLM's proposed plan amendment/final EIS. A person who meets the conditions and files a protest must file the protest within 30 days of the date that the Environmental Protection Agency publishes its notice of availability of the proposed plan amendment/final EIS in the **Federal Register**.

ADDRESSES: Copies of the proposed plan amendment/final EIS and EIR have been sent to affected Federal, State, and local government agencies and to other stakeholders. Copies of the proposed plan amendment/final EIS and EIR are available for public inspection at the Barstow Field Office, 2601 Barstow Road, Barstow, CA 92311; and the California Desert District Office, 22835 Calle San Juan de Los Lagos, Moreno Valley, CA 92553–9046. Interested persons may also review the proposed plan amendment/final EIS and EIR on the Internet at *http://www.blm.gov/ca/st/en/fo/cdd.html.* All protests must be in writing and mailed. For regular mail, please send protests to: BLM Director (210), Attention: Protest Coordinator, P.O. Box 71383, Washington, DC 20024–1383. For overnight mail or other delivery, please send protests to: BLM Director (210), Attention: Protest Coordinator, 20 M St. SE., Room 2134LM, Washington, DC 20003.

FOR FURTHER INFORMATION CONTACT: Jeffery Childers; telephone, 760–252–6020; mail, BLM Barstow Field Office, 2601 Barstow Road, Barstow, CA 92311; email, *jchilders@blm.gov.* Persons who use a telecommunications device for the deaf (TDD) may call the Federal Information Relay Service (FIRS) at 1–800–877–8339 to contact the above individual during normal business hours. The FIRS is available 24 hours a day, 7 days a week, to leave a message or question with the above individual. You will receive a reply during normal business hours.

SUPPLEMENTARY INFORMATION: The BLM has received a right-of-way (ROW) application from Soda Mountain Solar, LLC to construct, operate, maintain, and decommission a PV power plant facility along with the necessary ancillary facilities. The Project as proposed by the Applicant would occupy approximately 2,557 acres, within a 4,170 right-of-way application area. The Project is located along Interstate 15 (I–15), south of Blue Bell Mine Road, about 6 miles southwest of Baker, California, and 52 miles northeast of Barstow, California. As initially proposed, the Project would include solar array fields, access roads, collector lines, a substation with switchyard and interconnection, ancillary buildings, groundwater production, test, and observation water wells, water tanks, a water treatment and storage facility, brine ponds, warehouses, fencing, berms, other infrastructure, and laydown areas. The Project will be accessed by the existing Rasor and Blue Bell Mine roads. New internal roads would be constructed among collector lines, substation, solar arrays and sub arrays, and other ancillary facilities. The interconnection to the proposed substation and collector lines from the arrays would be via underground trench, including underground trenching beneath I–15. The Project as proposed by the Applicant would have up to 358 megawatts of generating capacity which would interconnect with existing power lines. The BLM Preferred Alternative would eliminate the array north of Interstate 15 which would reduce the permitted project to 264 megawatts of solar energy.

In connection with its decision on the proposed Project, the BLM is considering an amendment to the CDCA Plan, as analyzed in the final EIS and EIR alternatives. The CDCA Plan, while recognizing the potential compatibility of solar energy facilities on public lands, requires that all sites associated with power generation or transmission not identified in the CDCA Plan be considered through the land use plan amendment process. The BLM is deciding whether to amend the CDCA Plan to identify the Project site as suitable or unsuitable for solar development.

The proposed plan amendment/final EIS and EIR describes the following seven alternatives: Alternative A: The Applicant Proposed Action—358 MW on 2,557 acres; Alternative B (Preferred Alternative)—264 MW project on 1,923 acres; Alternative C—298 MW project on 2,354 acres; Alternative D—250 MW project on 2,134 acres; Alternative E—No action alternative/no project approval, no issuance of a ROW Grant, no county approval of a groundwater well permit, no Land Use Plan amendment; Alternative F—BLM approves project with no county approval of a groundwater well permit; and Alternative G—Planning decision identifying the area as unsuitable for solar through a Land Use Plan Amendment, with no issuance of a ROW Grant, and no county approval of a groundwater well permit. All of the alternatives, except Alternative E, would include an amendment to the CDCA Plan. The Agency Preferred Alternative identified as Alternative B, removes the northern array and associated facilities, includes the Applicant Proposed alignment for Rasor Road, and excludes the proposed brine ponds associated with reverse osmosis treatment of groundwater, as contemplated under Alternative F. The BLM's Preferred Alternative would reduce the Project size from 2,557 to 1,923 acres, and decrease the Project's output from 358 to 264 MW.

The proposed plan amendment/final EIS and EIR evaluates the potential impacts of the proposed Soda Mountain Solar Project on air quality, biological resources, cultural resources, water resources, geological resources and hazards, land use, noise, paleontological resources, public health, socioeconomics, soils, traffic and transportation, visual resources, and other resources.

Mitigation measures would be implemented to avoid, minimize, rectify, reduce, or compensate for adverse impacts of the Project. These include:

• *Wildlife:* The acquisition of compensatory mitigation land at a 1:1 ratio would be required for all desert tortoise habitat and all active burrowing owl territories disturbed. Wildlife would be avoided or relocated (*e.g.,* burrowing owls) to the extent feasible and trenching would be managed to minimize wildlife entrapment. An avian monitoring program will be implemented with an adaptive management program that would identify and implement project-specific mitigation measures to reduce bird mortality that may occur as a result of the Project. Additional water sources for bighorn sheep would be required in coordination with the California Department of Fish and Wildlife and the National Park Service. An adaptive management strategy aimed at maintaining existing foraging, movement, and feeding opportunities for bighorn sheep would be required with the goal of improving opportunities to restore sheep movement and connectivity. The adaptive management strategy would include funding for a 10-year bighorn sheep study to examine the response of sheep to the project and to inform adaptive management actions, including culvert crossing improvements, temporary water sources near culverts, measures to minimize the effects of human activities on bighorn sheep, and funding for additional regional connectivity projects for bighorn sheep. Mitigation measures would also include monitoring for bighorn sheep during construction and compensation for loss of bighorn sheep foraging habitat.

• *Cultural/Paleontological Resources:* Impacts to onsite and any nearby cultural, archaeological, and paleontological resources, if discovered, would be avoided by having archeological, paleontological, and Native American participants onsite during construction.

• *Hydrology:* A comprehensive drainage, stormwater, and sedimentation control plan would be prepared and implemented to avoid or minimize the Project's potential to cause or result in additional erosion and sedimentation.

• *Air quality:* Water would be applied to disturbed and actively-used areas during both construction and operation. A dust-control plan would be prepared and implemented pursuant to the Mojave Desert Air Quality Management District's Rule 403.2.

• *Groundwater:* A draft groundwater monitoring and mitigation plan has been prepared that includes trigger points to avoid adverse impacts associated with groundwater drawdown.

• *Visual:* All structures would be painted with BLM-approved colors; nighttime lighting would be minimized; and a glint and glare assessment, mitigation, and monitoring plan would be prepared and implemented.

The BLM published a Notice of Intent to prepare an EIS and EIR for the project in the **Federal Register** on October 23, 2012 (77 FR 64824). The BLM and San Bernardino County held joint public scoping meetings in Barstow on November 14, 2012. The formal scoping period ended on December 14, 2012.

The BLM published a Notice of Availability of the draft plan amendment/draft EIS and EIR for the Project in the **Federal Register** on November 29, 2013 (78 FR 71640). The BLM and San Bernardino County held three public meetings: two in Barstow on January 8 and 9, 2014, and a third in Yucca Valley on January 11, 2014, to provide additional information to the public regarding the analysis.

Comments on the draft plan amendment/draft EIS and EIR received from agencies, members of the public, and internal lead and cooperating agency review were considered and incorporated as appropriate into the proposed plan amendment/final EIS and EIR. Instructions for filing a protest with the Director of the BLM regarding the proposed Plan Amendment/final EIS and EIR may be found in the ''Dear Reader'' Letter of the proposed plan amendment/final EIS and EIR and at 43 CFR 1610.5–2. All protests must be in writing and mailed to the appropriate address, as set forth in the **ADDRESSES** section above. Emailed protests will not be accepted as valid protests unless the protesting party also provides the original letter by either regular or overnight mail postmarked by the close of the protest period. Under these conditions, the BLM will consider the emailed protest as an advance copy and it will receive full consideration. If you wish to provide the BLM with such advance notification, please direct emails to *protest@blm.gov.*

Before including your phone number, email address, or other personal identifying information in your protest, you should be aware that your entire protest—including your personal identifying information—may be made publicly available at any time. While you can ask us in your protest to withhold your personal identifying information from public review, we cannot guarantee that we will be able to do so.

Authority: 40 CFR 1506.6, 40 CFR 1506.10, 43 CFR 1610.2; 43 CFR 1610.5.

Thomas Pogacnik,

Deputy State Director, California.

[FR Doc. 2015–13925 Filed 6–5–15; 4:15 pm]

BILLING CODE 4310–40–P

DEPARTMENT OF THE INTERIOR

Bureau of Land Management

[LLMTM00000.L111100000.XP0000 15XL1109AF MO#4500080076]

Notice of Public Meeting; Central Montana Resource Advisory Council

AGENCY: Bureau of Land Management, Interior.

ACTION: Notice of public meeting.

SUMMARY: In accordance with the Federal Land Policy and Management Act (FLPMA) and the Federal Advisory Committee Act of 1972 (FACA), the U.S. Department of the Interior, Bureau of Land Management (BLM) Central Montana Resource Advisory Council (RAC) will meet as indicated below.

DATES: The Central Montana Resource Advisory Council Meeting will be held July 15–16, 2015 in Lewistown, Montana. The July 15 meeting will begin at 10 a.m. with a 30-minute public comment period and will adjourn at 5 p.m. The July 16 meeting will begin at 8 a.m. with a 30-minute public comment period beginning at 10 a.m. and will adjourn at 12 p.m.

ADDRESSES: The meetings will be in the Bureau of Land Management, Central Montana District Office, Lewistown Field Office Conference Room at 920 NE Main, Lewistown, Montana.

FOR FURTHER INFORMATION CONTACT: Mark Albers, HiLine District Manager, Great Falls Field Office, 1101 15th Street North, Great Falls, MT 59401, (406) 791–7789, *malbers@blm.gov.* Persons who use a telecommunications device for the deaf (TDD) may call the Federal Information Relay Service (FIRS) at 1–800–677–8339 to contact the above individual during normal

business hours. The FIRS is available 24 hours a day, 7 days a week to leave a message or question with the above individual. You will receive a reply during normal business hours.

SUPPLEMENTARY INFORMATION: This 15-member council advises the Secretary of the Interior, through the BLM, on a variety of management issues associated with public land management in Montana. During these meetings the council is scheduled to participate in/discuss/act upon these topics/activities: A roundtable discussion among council members and the BLM; election of officers; update on BLM efforts to restore access to the Bullwhacker area and District Managers' updates. All RAC meetings are open to the public.

Each formal RAC meeting will also have time allocated for hearing public comments. Depending on the number of persons wishing to comment and time available, the time for individual oral comments may be limited.

Authority: 43 CFR 1784.4–2.

Mark K. Albers,

HiLine District Manager.

[FR Doc. 2015–14022 Filed 6–8–15; 8:45 am]

BILLING CODE 4310–DN–P

DEPARTMENT OF THE INTERIOR

National Park Service

[NPS–WASO–NAGPRA–18273]; [PPWOCRADN0–PCU00RP14.R50000]

Notice of Inventory Completion: U.S. Department of the Interior, National Park Service, Glen Canyon National Recreation Area, Page, AZ

AGENCY: National Park Service, Interior.

ACTION: Notice.

SUMMARY: The U.S. Department of the Interior, National Park Service, Glen Canyon National Recreation Area has completed an inventory of human remains and associated funerary objects, in consultation with the appropriate Indian tribes or Native Hawaiian organizations, and has determined that there is a cultural affiliation between the human remains and associated funerary objects and present-day Indian tribes or Native Hawaiian organizations. Lineal descendants or representatives of any Indian tribe or Native Hawaiian organization not identified in this notice that wish to request transfer of control of these human remains and associated funerary objects should submit a written request to Glen Canyon National Recreation Area. If no additional requestors come forward, transfer of control of the human remains and associated funerary objects to the lineal descendants, Indian tribes, or Native Hawaiian organizations stated in this notice may proceed.

DATES: Lineal descendants or representatives of any Indian tribe or Native Hawaiian organization not identified in this notice that wish to request transfer of control of these human remains and associated funerary objects should submit a written request with information in support of the request to Glen Canyon National Recreation Area at the address in this notice by July 9, 2015.

ADDRESSES: Todd Brindle, Superintendent, Glen Canyon National Recreation Area, P.O. Box 1507, Page, AZ 86040, telephone (928) 608–6200, email *Todd_Brindle@nps.gov.*

SUPPLEMENTARY INFORMATION: Notice is here given in accordance with the Native American Graves Protection and Repatriation Act (NAGPRA), 25 U.S.C. 3003, of the completion of an inventory of human remains and associated funerary objects under the control of the U.S. Department of the Interior, National Park Service, Glen Canyon National Recreation Area, Page, AZ. The human remains and associated funerary objects were removed from within the boundaries of Glen Canyon National Recreation Area, in Garfield, Kane, and San Juan Counties, UT.

This notice is published as part of the National Park Service's administrative responsibilities under NAGPRA, 25 U.S.C. 3003(d)(3). The determinations in this notice are the sole responsibility of the Superintendent, Glen Canyon National Recreation Area.

Consultation

A detailed assessment of the human remains was made by Glen Canyon National Recreation Area professional staff in consultation with representatives of the Havasupai Tribe of the Havasupai Reservation, Arizona; Hopi Tribe of Arizona; Hualapai Indian Tribe of the Hualapai Indian Reservation, Arizona; Kaibab Band of Paiute Indians of the Kaibab Indian Reservation, Arizona; Navajo Nation, Arizona, New Mexico, & Utah; Ohkay Owingeh, New Mexico (previously listed as the Pueblo of San Juan); Pueblo of Nambe, New Mexico; Pueblo of Pojoaque, New Mexico; San Juan Southern Paiute Tribe of Arizona; Ute Mountain Tribe of the Ute Mountain Reservation, Colorado, New Mexico, & Utah; and Zuni Tribe of the Zuni Reservation, New Mexico.

History and Description of the Remains

In 1969, human remains representing, at minimum, two individuals were removed from site NA10555 in San Juan County, UT, during unauthorized excavations by park visitors and subsequent inspection of the site by Glen Canyon National Recreation Area officials. No known individuals were identified. The 50 associated funerary objects are 2 cradleboards, 1 frame, 4 pieces of padding, 2 hoods, 1 cloth, 1 animal hide, 1 blanket, 1 blanket fragment, 3 pieces of worked wood, 1 tumpstrap, 14 pieces of cordage, 2 pieces of raw fiber, 2 bundles, 1 rope segment, 2 knots, 3 sandals, 1 ladle fragment, 7 squash seeds, and 1 Kayenta Black-on-white bowl.

The cradleboard construction style and the associated ceramics indicate that the remains are Kayenta Ancestral Puebloan and are dated between A.D. 1200 and 1250.

In 1975, human remains representing, at minimum, two individuals were removed from site NA14080 in San Juan County, UT by a park visitor. No known individuals were identified. The one associated funerary object is a yucca knot.

Site NA14080 is a one room structure whose style of masonry architecture indicates occupation during the Puebloan period (A.D. 800–1300) and association with the Kayenta culture.

In 1976 and 1977, human remains representing, at minimum, two individuals were removed from site 42SA5379 in San Juan County, UT, during legally authorized excavations. No known individuals were identified. No associated funerary objects are present.

Site 42SA5379 is a single habitation room on an alluvial terrace. Artifact types and radiocarbon dating identify the site as Kayenta or Mesa Verde Ancestral Puebloan, dated between A.D. 1000 and 1300.

In 1983, human remains representing, at minimum, three individuals were removed from site 42KA2661 in Kane County, UT, after the site was inundated and disturbed by high water levels in Lake Powell. Human remains found on the surface by park visitors were turned over to Glen Canyon National Recreation Area officials and additional remains were removed during subsequent legally authorized excavations. No known individuals were identified. The 39 associated funerary objects are 1 projectile point, 1 knife (made up of two fragments, 9 biface fragments, 1 piece of debitage, 2 shell beads, 24 pieces of cordage, and 1 yucca knot.

Site 42KA2661 is located in an alcove in the vertical face of a Navajo sandstone cliff and was used solely for burials. The associated funerary objects and radiocarbon dating identify the site as Basketmaker II, dated between 790 and 275 B.C.

In 1983, human remains representing, at minimum, one individual were removed from site 42SA22786 in San Juan County, UT, by park visitors. The human remains were turned over to the New Mexico Office of the Medical Investigator, which contacted Glen Canyon National Recreation Area officials. Glen Canyon National Recreation Area archeologists subsequently undertook archeological excavations at the burial location. No known individuals were identified. The 210 associated artifacts are 190 segments of cordage (161 feather-wrapped, 20 probable cotton, 9 yucca), 1 corn cob, 11 bundles of yucca fiber, and 8 feather tufts.

The manufacturing technique of the various cordage pieces and the other organic remains from the burial are consistent with cultural material from the Kayenta Ancestral Puebloan tradition, which dates between A.D. 800 and 1300. Radiocarbon dating of the burial corresponds to this time period as well.

In 1985, human remains representing, at minimum, one individual were removed from site 42GA3051 in Garfield County, UT, during a legally authorized archeological survey by Northern Arizona University. The single piece of human cranial bone was collected from the surface of the site. No known individuals were identified. No associated funerary objects are present.

Ceramic types on the surface at 42GA3051 suggest a Fremont and/or Ancestral Puebloan identification for the site, dating between A.D. 1000 and 1300.

Evidence demonstrating continuity between the prehistoric Basketmaker, Ancestral Puebloan, and Fremont cultures and the modern Hopi and Zuni tribes includes similarities in material culture, architectural styles, and mortuary practices, as well as oral histories. Recent studies by physical anthropologists also indicate a close biological relationship among these prehistoric culture groups and the modern Hopi and Zuni peoples. Specific material culture that links the prehistoric and modern groups includes textiles and painted ceramic vessels, which are characterized by distinctive methods of manufacture and design styles. Architectural styles, masonry techniques, and certain structure types suggest cultural continuity between prehistoric and modern groups. Continuity in mortuary practices, including interment in a flexed or semi-flexed position within structures or in prepared cists within alcoves; preparation of burials by wrapping in textiles; and the inclusion of offerings such as utilitarian tools, ornaments, and painted ceramic vessels that held food and water also support cultural affiliation.

Hopi and Zuni oral histories indicate their ancestors lived in the region now within and adjacent to Glen Canyon National Recreation Area. At least three Hopi clans lived near Navajo Mountain and Rainbow Bridge and in the adjacent canyon systems along the Colorado and San Juan Rivers prior to migrating southeast to join other clans at the modern Hopi villages on southern Black Mesa. Numerous habitation sites and shrines are recognized by those Hopi clans, some of which are still visited to make offerings or collect plants and minerals. Distinctive rock art elements or panels are also referenced by oral history and clan traditions.

Zuni oral history indicates that after emergence into this world, medicine societies migrated northward along the east side of the Colorado River and then eastward, eventually meeting other Zuni people at their current homeland. Sites along this route, now within or adjacent to Glen Canyon National Recreation Area, are important in Zuni ceremonial traditions because they are affiliated with medicine societies.

Determinations Made by Glen Canyon National Recreation Area

Officials of Glen Canyon National Recreation Area have determined that:

- Pursuant to 25 U.S.C. 3001(9), the human remains described in this notice represent the physical remains of 11 individuals of Native American ancestry.
- Pursuant to 25 U.S.C. 3001(3)(A), the 300 objects described in this notice are reasonably believed to have been placed with or near individual human remains at the time of death or later as part of the death rite or ceremony.
- Pursuant to 25 U.S.C. 3001(2), there is a relationship of shared group identity that can be reasonably traced between the Native American human remains and associated funerary objects and the Hopi Tribe of Arizona and the Zuni Tribe of the Zuni Reservation, New Mexico.

Additional Requestors and Disposition

Lineal descendants or representatives of any Indian tribe or Native Hawaiian organization not identified in this notice that wish to request transfer of control of these human remains and associated funerary objects should submit a written request with information in support of the request to Todd Brindle, Superintendent, Glen Canyon National Recreation Area, P.O. Box 1507, Page, AZ 86040, telephone (928) 608–6200, email *Todd_Brindle@nps.gov,* by July 9, 2015. After that date, if no additional requestors have come forward, transfer of control of the human remains and associated funerary objects to the Hopi Tribe of Arizona and the Zuni Tribe of the Zuni Reservation, New Mexico may proceed.

Glen Canyon National Recreation Area is responsible for notifying the Havasupai Tribe of the Havasupai Reservation, Arizona; Hopi Tribe of Arizona; Hualapai Indian Tribe of the Hualapai Indian Reservation, Arizona; Kaibab Band of Paiute Indians of the Kaibab Indian Reservation, Arizona; Navajo Nation, Arizona, New Mexico, & Utah; Ohkay Owingeh, New Mexico (previously listed as the Pueblo of San Juan); Pueblo of Nambe, New Mexico; Pueblo of Pojoaque, New Mexico; San Juan Southern Paiute Tribe of Arizona; Ute Mountain Tribe of the Ute Mountain Reservation, Colorado, New Mexico, & Utah; and Zuni Tribe of the Zuni Reservation, New Mexico that this notice has been published.

Dated: May 6, 2015.

Mariah Soriano,

Acting Manager, National NAGPRA Program.

[FR Doc. 2015–14112 Filed 6–8–15; 8:45 am]

BILLING CODE 4312–50–P

DEPARTMENT OF THE INTERIOR

National Park Service

[NPS–WASO–NAGPRA–18277]; [PPWOCRADN0–PCU00RP15.R50000]

Notice of Intent To Repatriate Cultural Items: U.S. Department of Agriculture, Forest Service, Ozark-St. Francis National Forests, Russellville, AR

AGENCY: National Park Service, Interior.

ACTION: Notice.

SUMMARY: The U.S. Department of Agriculture (USDA), Forest Service, Ozark-St. Francis National Forests, in consultation with the appropriate Indian tribes or Native Hawaiian organizations, have determined that the cultural items listed in this notice meet the definition of unassociated funerary objects. Lineal descendants or representatives of any Indian tribe or Native Hawaiian organization not identified in this notice that wish to claim these cultural items should submit a written request to the Ozark-

St. Francis National Forests. If no additional claimants come forward, transfer of control of the cultural items to the lineal descendants, Indian tribes, or Native Hawaiian organizations stated in this notice may proceed.

DATES: Lineal descendants or representatives of any Indian tribe or Native Hawaiian organization not identified in this notice that wish to claim these cultural items should submit a written request with information in support of the claim to the Ozark-St. Francis National Forests at the address in this notice by July 9, 2015.

ADDRESSES: Reggie Blackwell, USDA, Forest Service, Ozark-St. Francis National Forests, 605 West Main, Russellville, AR 72801, telephone (479) 964–7200.

SUPPLEMENTARY INFORMATION: Notice is here given in accordance with the Native American Graves Protection and Repatriation Act (NAGPRA), 25 U.S.C. 3005, of the intent to repatriate cultural items under the control of the USDA, Forest Service, Ozark-St. Francis National Forests that meet the definition of unassociated funerary objects under 25 U.S.C. 3001.

This notice is published as part of the National Park Service's administrative responsibilities under NAGPRA, 25 U.S.C. 3003(d)(3). The determinations in this notice are the sole responsibility of the museum, institution, or Federal agency that has control of the Native American cultural items. The National Park Service is not responsible for the determinations in this notice.

History and Description of the Cultural Items

In 1985, four cultural items were removed from sites 3LE139 and 3PH233, the County Line site, from Federal land managed by the USDA Forest Service, Ozark-St. Francis National Forests, AR. The sites were looted by Rickey Joe Beard, who was successfully prosecuted in 1985 in violation of the Archeological Resources Protection Act. As part of his plea bargain, Beard showed the sites to the authorities. Beard reportedly collected human remains from the sites, but none of Beard's collections were returned to the Ozark-St. Francis National Forests. The four cultural items were collected from the surface in 1985. The County Line site is a prehistoric open site on a lower ridge spur and toe slope overlooking the St. Francis floodplain. The site was recorded in 1985 based on information from Beard and was revisited and probed by Michael Pfeiffer and Robin Toole, USDA, Forest Service, in 1990.

The four unassociated funerary objects are reconstructable vessels and identified as one Carson Red on Buff var. Olmond (a deep-profile flaring rim bowl); one plain everted rim jar; and two Barton Incised var. Kent (a flaring rim jar with three chronologically sensitive modes, var. Kent, the Memphis rim, and appliqué triangular handles). The cultural items date from A.D. 1450 to 1600.

Determinations Made by the Ozark-St. Francis National Forests

Officials of the Ozark-St. Francis National Forests have determined that:

- Pursuant to 25 U.S.C. 3001(3)(B), the four cultural items described above are reasonably believed to have been placed with or near individual human remains at the time of death or later as part of the death rite or ceremony and are believed, by a preponderance of the evidence, to have been removed from a specific burial site of a Native American individual.
- Pursuant to 25 U.S.C. 3001(2), there is a relationship of shared group identity that can be reasonably traced between the unassociated funerary objects and The Quapaw Tribe of Indians.

Additional Requestors and Disposition

Lineal descendants or representatives of any Indian tribe or Native Hawaiian organization not identified in this notice that wish to claim these cultural items should submit a written request with information in support of the claim to Reggie Blackwell, USDA, Forest Service, Ozark-St. Francis National Forests, 605 West Main, Russellville, AR 72801, telephone (479) 964–7200, by July 9, 2015. After that date, if no additional claimants have come forward, transfer of control of the unassociated funerary objects to The Quapaw Tribe of Indians may proceed.

The Ozark-St. Francis National Forests are responsible for notifying the Absentee Shawnee Tribe of Indians of Oklahoma; Alabama-Quassarte Tribal Town; Caddo Nation of Oklahoma; Cherokee Nation; Coushatta Tribe of Louisiana; Delaware Nation, Oklahoma; Eastern Shawnee Tribe of Oklahoma; Jena Band of Choctaw Indians; Kialegee Tribal Town; Miami Tribe of Oklahoma; Mississippi Band of Choctaw Indians; Peoria Tribe of Indians of Oklahoma; Shawnee Tribe; The Chickasaw Nation; The Choctaw Nation of Oklahoma; The Muscogee (Creek) Nation; The Osage Nation (previously listed as the Osage Tribe); The Quapaw Tribe of Indians; The Seminole Nation of Oklahoma; Thlopthlocco Tribal Town; Tunica-Biloxi Indian Tribe; United Keetoowah Band of Cherokee Indians in Oklahoma; and the Wichita and Affiliated Tribes (Wichita, Keechi, Waco & Tawakonie), Oklahoma, that this notice has been published.

Dated: May 6, 2015.

Mariah Soriano,

Acting Manager, National NAGPRA Program.

[FR Doc. 2015–14115 Filed 6–8–15; 8:45 am]

BILLING CODE 4312–50–P

DEPARTMENT OF THE INTERIOR

National Park Service

[NPS–WASO–NRNHL–18353; PPWOCRADI0, PCU00RP14.R50000]

National Register of Historic Places; Notification of Pending Nominations and Related Actions

Nominations for the following properties being considered for listing or related actions in the National Register were received by the National Park Service before May 16, 2015. Pursuant to section 60.13 of 36 CFR part 60, written comments are being accepted concerning the significance of the nominated properties under the National Register criteria for evaluation. Comments may be forwarded by United States Postal Service, to the National Register of Historic Places, National Park Service, 1849 C St. NW., MS 2280, Washington, DC 20240; by all other carriers, National Register of Historic Places, National Park Service, 1201 Eye St. NW., 8th floor, Washington, DC 20005; or by fax, 202–371–6447. Written or faxed comments should be submitted by June 24, 2015. Before including your address, phone number, email address, or other personal identifying information in your comment, you should be aware that your entire comment—including your personal identifying information—may be made publicly available at any time. While you can ask us in your comment to withhold your personal identifying information from public review, we cannot guarantee that we will be able to do so.

Dated: May 20, 2015.

J. Paul Loether,

Chief, National Register of Historic Places/National Historic Landmarks Program.

ARIZONA

Pinal County

Chi'chil Bildagoteel Historic District, Address Restricted, Kearney, 15000358

CALIFORNIA

Los Angeles County

Forsythe Memorial School for Girls, (Latinos in 20th Century California MPS) 506 N. Evergreen Ave., Los Angeles, 15000359

Solano County

Von Pfister General Store, Von Pfister Alley, Benicia, 15000360

GEORGIA

Jones County

Roberts—Bush—Roberts House, 157 Eatonton Hwy., Gray, 15000361

LOUISIANA

Rapides Parish

Long, Huey P., Memorial Hospital, 352 Hospital Blvd., Pineville, 15000362

MICHIGAN

Genesee County

Swayze Apartments, 313 W. Court St., Flint, 15000363

Lenawee County

Blissfield Downtown Historic District, Roughly bounded by Pearl, Jefferson & Giles Sts., Adrian & Blissfield RR., Blissfield, 15000364

MISSOURI

Cape Girardeau County

Wilson, J. Maple and Grace Senne, House, 344 N. Ellis St., Cape Girardeau, 15000365

NEW JERSEY

Essex County

Bloomfield Cemetery, 383 Belleville Ave., Bloomfield Township, 15000366

NEW YORK

Erie County

First Unitarian Church of Buffalo, 695 Elmwood Ave., Buffalo, 15000367

Monroe County

Inglewood and Thurston Historic District, 15–218 Inglewood Dr., 169–291 Thurston Rd. & 5 Marlborough, Rochester, 15000368

Schoharie County

Hess, Christian, House and Shoemaker's Shop, 111 Stony Brook Rd., Schoharie, 15000369

Ulster County

Alligerville Historic District, Berme, Church Hill, Creek, Rose Hill & Towpath Rds., Cty. Rd. 6, Church & Purcell Lns., Accord, 15000370

OHIO

Cuyahoga County

Scranton South Side Historic District, 2314–2658, 3339 Scranton Rd., 1632–2101 Holmden, 1644–2115 Brainard, 1724–2105 Corning, 1701–2034 Clover Aves., Cleveland, 15000371

Montgomery County

Miami Valley Golf Course and Clubhouse, 3311 Salem Ave., Dayton, 15000372

OREGON

Coos County

First National Bank of Bandon, 112 2nd St. SE., Bandon, 15000373

Lane County

Leaburg Hydroelectric Project Historic District, 14348 McKenzie River Hwy., Leaburg, 15000375

Tillamook County

Tillamook Bay Life-Saving Station, 15280 US 101 N., Barview, 15000374

VERMONT

Addison County

First Congregational Church of Cornwall Parsonage, 18 VT 74, Cornwall, 15000376

WISCONSIN

Rock County

Gray, William H. and Edith, Farmstead, 313 E. High St., Milton, 15000377

[FR Doc. 2015–13991 Filed 6–8–15; 8:45 am]

BILLING CODE 4312–51–P

DEPARTMENT OF THE INTERIOR

National Park Service

[NPS–WASO–NAGPRA–18276; PPWOCRADN0–PCU00RP15.R50000]

Notice of Inventory Completion: U.S. Army Corps of Engineers, St. Louis District, Mark Twain Lake, MO

AGENCY: National Park Service, Interior.

ACTION: Notice.

SUMMARY: The U.S. Army Corps of Engineers, St. Louis District, has completed an inventory of human remains and associated funerary objects for Mark Twain Lake, MO, in consultation with the appropriate Indian tribes or Native Hawaiian organizations, and has determined that there is no cultural affiliation between the human remains and associated funerary objects and any present-day Indian tribes or Native Hawaiian organizations. Representatives of any Indian tribe or Native Hawaiian organization not identified in this notice that wish to request transfer of control of these human remains and associated funerary objects should submit a written request to the St. Louis District. If no additional requestors come forward, transfer of control of the human remains and associated funerary objects to the Indian tribes stated in this notice may proceed.

DATES: Representatives of any Indian tribe or Native Hawaiian organization not identified in this notice that wish to request transfer of control of these human remains and associated funerary objects should submit a written request with information in support of the request to the U.S. Army Corps of Engineers, St. Louis District at the address in this notice by July 9, 2015.

ADDRESSES: U.S. Army Corps of Engineers, St. Louis District, ATTN: CEMVS–EC–Z (Michael K. Trimble, Ph.D.), 1222 Spruce Street, St. Louis, MO 63103–2833, telephone (314) 331–8466, email *michael.k.trimble@usace.army.mil.*

SUPPLEMENTARY INFORMATION: Notice is here given in accordance with the Native American Graves Protection and Repatriation Act (NAGPRA), 25 U.S.C. 3003, of the completion of an inventory of human remains and associated funerary objects under the control of the U.S. Army Corps of Engineers, St. Louis District, St. Louis, MO. The human remains and associated funerary objects were removed from fee-titled property at Mark Twain Lake in the counties of Monroe and Ralls, MO.

This notice is published as part of the National Park Service's administrative responsibilities under NAGPRA, 25 U.S.C. 3003(d)(3) and 43 CFR 10.11(d). The determinations in this notice are the sole responsibility of the museum, institution, or Federal agency that has control of the Native American human remains and associated funerary objects. The National Park Service is not responsible for the determinations in this notice.

Consultation

A detailed assessment of the human remains was made by the St. Louis District professional staff in consultation with representatives of the Absentee-Shawnee Tribe of Indians of Oklahoma; Cherokee Nation; Citizen Potawatomi Nation, Oklahoma; Delaware Nation, Oklahoma; Delaware Tribe of Indians; Eastern Shawnee Tribe of Oklahoma; Forest County Potawatomi Community, Wisconsin; Hannahville Indian Community, Michigan; Ho-Chunk Nation of Wisconsin; Iowa Tribe of Kansas and Nebraska; Iowa Tribe of

Oklahoma; Kickapoo Traditional Tribe of Texas; Kickapoo Tribe of Indians of the Kickapoo Reservation in Kansas; Kickapoo Tribe of Oklahoma; Match-e-be-nash-she-wish Band of Pottawatomi, Michigan; Miami Tribe of Oklahoma; Nottawaseppi Huron Band of the Potawatomi, Michigan; Peoria Tribe of Indians of Oklahoma; Pokagon Band of Potawatomi Indians, Michigan and Indiana; Prairie Band Potawatomi Nation; Sac & Fox Nation of Missouri in Kansas and Nebraska; Sac & Fox Nation, Oklahoma; Sac & Fox Tribe of the Mississippi in Iowa; Shawnee Tribe; The Osage Nation; The Quapaw Tribe of Indians; United Keetoowah Band of Cherokee Indians in Oklahoma; and the Winnebago Tribe of Nebraska.

History and Description of the Remains

In 1960, human remains representing, at minimum, two individuals (one adult and one infant) and 17 associated funerary objects were removed from the center of Buie Mound site (23MN9) in Monroe County, MO. Materials were collected during archeological testing by the University of Missouri, Columbia, in advance of the construction of the dam to impound the Salt River for the creation of Mark Twain Lake. The human remains and objects were originally housed at the University of Missouri, Columbia. In February 2007, the collection was moved to Illinois State Museum, Springfield, where it is located today. The human remains were determined to be those of one adult male, represented by cranial remains, dental remains, and a partial postcranial skeleton and one infant of unknown sex as represented by three bone fragments. No known individuals were identified. The 17 associated funerary objects are 1 ceramic sherd, 1 biface fragment, and 15 pieces of lithic debitage. Documentation indicates that the site dates to the Late Woodland Period (A.D. 400–900).

In 1961, human remains representing, at minimum, three individuals (two adults and one sub-adult) and 49 associated funerary objects were removed from Garrelts I Site (23MN221) in Monroe County, MO. Materials were collected during archeological testing by the University of Missouri, Columbia, in advance of the construction of the dam to impound the Salt River for the creation of Mark Twain Lake. The human remains and objects were originally housed at the University of Missouri, Columbia. In February 2007, the collection was moved to Illinois State Museum, Springfield, where it is located today. The human remains were determined to be those of two adults, of unknown sex, represented by cranial, dental, and postcranial fragments, and one sub-adult, of unknown sex, represented by a fragment of mandible and loose teeth. No known individuals were identified. The 49 associated funerary objects are 3 chert flakes/debitage, 3 groundstone tools, 36 pieces of miscellaneous stone, 1 burned ceramic sherd, 2 pieces of unmodified fauna, 1 crinoid fossil, 1 sandstone abrader, 1 groundstone mano, and 1 hammer stone. Documentation indicates that the site dates to the Late Woodland Period (A.D. 400–900).

In 1967, human remains representing, at minimum, six individuals (five adults and one sub-adult) and 736 associated funerary objects were removed from the Cravens Site (23MN261) in Monroe County, MO. Materials were collected during archeological testing by the University of Missouri, Columbia, in advance of the construction of the dam to impound the Salt River for the creation of Mark Twain Lake. The human remains and objects were originally housed at the University of Missouri, Columbia. In February 2007, the collection was moved to Illinois State Museum, Springfield, where it is located today. The five adults, represented by fragmentary cranial, dental, and postcranial remains are that of one male, one female, and 3 of unknown sex. The one subadult is represented by one deciduous tooth and is of unknown sex. No known individuals were identified. The 736 associated funerary objects are 63 miscellaneous stone fragments, 5 pieces of worked faunal bone, 1 canid tooth with drilled hole at root end, 10 biface fragments, 1 complete projectile point, 364 pieces of lithic debitage, 18 unworked hematite fragments, 1 nutting stone, 1 incomplete biface drill, 13 fragments of ochre, 36 miscellaneous stones, 15 pieces of unworked faunal bone, 207 lithic flakes and shatter, and 1 fossil bivalve fragment. Documentation indicates that the site dates to the Middle to Late Woodland Period (200 B.C.–A.D. 900).

In 1978, human remains representing, at minimum, five individuals (three adults, one sub-adult, and one infant) and 1,332 associated funerary objects were removed from the Hatten Village Site (23MN272) in Monroe County, MO. Materials were collected during archeological testing by the University of Nebraska, Lincoln, in advance of the construction of the dam to impound the Salt River for the creation of Mark Twain Lake. The human remains and objects were originally housed at the University of Missouri, Columbia. In February 2007, the collection was moved to Illinois State Museum, Springfield, where it is located today. One adult is represented by a nearly complete cranium, teeth, fragmentary long bones, and small fragments of other postcranial remains are those of a male. Two adults of unknown sex are represented by cranial, dental, and postcranial remains. The one subadult of unknown sex is represented by dental remains and the one infant of unknown sex is represented by skull fragments, vertebrae fragments, and loose tooth. No known individuals were identified. The 1,332 associated funerary objects are 1 large piece of groundstone, 5 large chert cores, 1 intact mano, 1 fragmented mano, 474 ceramic sherds, 12 pieces of burned earth, 1 chert biface, 3 pieces of fired clay (daub), 1 ceramic pipe fragment, 1 large chert unifacial tool, 72 pieces of unmodified fauna, 30 fragments of unmodified shell, 1 crinoid fossil, 604 lithic flakes/debitage, 2 vials of pollen, 5 soil samples, 3 bags of flotation material, and 115 pieces of miscellaneous stones. Documentation indicates that the site dates to the Middle to Late Woodland Period (200 B.C.–A.D. 400–900).

In 1961, human remains representing, at minimum, 222 individuals (148 adults, 47 sub-adults, and 27 infants) and 188 associated funerary objects were removed from Hatten Mound (23MN275) in Monroe County, MO. Materials were collected during archeological testing by the University of Missouri, Columbia, in advance of the construction of the dam to impound the Salt River for the creation of Mark Twain Lake. The human remains and objects were originally housed at the University of Missouri, Columbia. In February 2007, the collection was moved to Illinois State Museum, Springfield, where it is located today. The burials were bundled, flexed, extended, and cremated. The individuals are represented by mandibles, cranial fragments, loose teeth, and fragmentary postcranial remains. The human remains represent 22 adult males, 10 adult females, 107 adults of unknown sex, 47 sub-adults of unknown sex, and 27 infants of unknown sex. No known individuals were identified. The 188 associated funerary objects are 15 anculosa shell beads and fragments, 1 clay elbow pipe, 1 cord marked ceramic vessel, 119 cord marked ceramic body sherds, 1 fragment of reconstructed bowl and 15 sherds from vessel, 1 white and grey chert biface fragment, 14 small chunks of galena, 4 small fragments of copper sheet, 2 antler tools (one broken in 2 pieces), 3 chert cores, 2 chert bifaces, 1 piece of worked faunal long bone, 4 beaver tooth fragments, 2 chert drills, 1

utilized chert flake, and 2 large pieces of debitage. Documentation indicates that the site dates to the Late Archaic (3000–1000 B.C.) and Late Woodland Period (A.D. 400–900).

In 1961, human remains representing, at minimum, one adult individual and 31 associated funerary objects were removed from Hatten Mound II (23MN300) in Monroe County, MO. Materials were collected during archeological testing by the University of Missouri, Columbia, in advance of the construction of the dam to impound the Salt River for the creation of Mark Twain Lake. The human remains and objects were originally housed at the University of Missouri, Columbia. In February 2007, the collection was moved to Illinois State Museum, Springfield, where it is located today. One adult of unknown sex is represented by fragmentary cranial, mandible, and postcranial remains and loose teeth. No known individual was identified. The 31 associated funerary objects are 1 lithic scraper, 1 lithic core, 2 lithic bifaces, 1 lithic biface fragment, 1 ground stone hammer stone, 13 flakes/debitage, and 12 pieces of hematite. Documentation indicated that the site dates to the Late Archaic (3000–1000 B.C.).

In 1961, human remains representing, at minimum, five individuals (three adults, one sub-adult, and one infant) and 766 associated funerary objects were removed from Garrelts II Site (23MN301) in Monroe County, MO. Materials were collected during archeological testing by the University of Missouri, Columbia, in advance of the construction of the dam to impound the Salt River for the creation of Mark Twain Lake. The human remains and objects were originally housed at the University of Missouri, Columbia. In February 2007, the collection was moved to Illinois State Museum, Springfield, where it is located today. Three adults are represented by cranial remains, loose teeth, and long bone fragments, the sub-adult (a child of about 6 years old) is represented by cranial fragments, loose teeth, and three postcranial fragments, and the one infant is represented by one long bone. All individuals are of unknown sex. Some of the human remains had been cremated. The 766 associated funerary objects are 1 grooved ground stone maul, 2 worked pieces of worked faunal bone, 10 mussel shells, 1 incised ceramic pipe bowl, 3 pieces of sandstone, 29 chipped stone cores, 12 bifaces and biface fragments, 2 chipped stone unifacial tools, 1 worked pebble, 1 small piece of ochre, 15 pieces of unmodified fauna, 51 miscellaneous stones, 14 fragments of unmodified shell, 15 pieces of hematite, 391 ceramic sherds, 215 lithic flakes/debitage, and 3 fossil fragments. Documentation indicated that the site dates to the Middle to Lake Woodland (200 B.C.–A.D. 900).

In 1979, human remains representing, at minimum, 21 individuals (13 adults, five sub-adults, and three infants) and 972 associated funerary objects were removed from the Cave Site (23MN796) in Monroe County, MO. Materials were collected during archeological testing by the University of Nebraska, Lincoln, in advance of the construction of the dam to impound the Salt River for the creation of Mark Twain Lake. The human remains and objects were originally housed at the University of Missouri, Columbia. In February 2007, the collection was moved to Illinois State Museum, Springfield, where it is located today. The individuals are represented by cranial fragments, dental remains, and postcranial elements and fragments. The human remains represent three adult males, one adult female, nine adults of unknown sex, five sub-adults of unknown sex, and three infants of unknown sex. No known individuals were identified. The 972 associated funerary objects are 1 stone pipe, 2 lithic bifaces, 12 biface fragments, 3 projectile point fragments, 2 cobbles, 756 flakes/debitage, 23 ceramic sherds, 1 piece of fired clay, 70 pieces of burned limestone, 64 miscellaneous stones, 4 ground stone fragments, 9 pieces of hematite, 22 fragments unmodified fauna, 2 lithic cores, and 1 small piece of sandstone. Documentation indicated that the site dates to the Late Woodland (A.D. 400–900).

In 1979, human remains representing, at minimum, six individuals (four adults, one sub-adult, and one infant) and 12 associated funerary objects were removed from the Cooper Site (23MN799) in Monroe County, MO. Materials were collected during archeological testing by the University of Nebraska, Lincoln, in advance of the construction of the dam to impound the Salt River for the creation of Mark Twain Lake. The human remains and objects were originally housed at the University of Missouri, Columbia. In February 2007, the collection was moved to Illinois State Museum, Springfield, where it is located today. One adult female is represented by postcranial fragments, one adult female is represented by teeth, cranial and femur fragments, and the other two adults are represented by teeth, cranial, mandible and postcranial fragments. The one sub-adult and one infant are represented by teeth, cranial, and long bone fragments. All individuals are of unknown sex. No known individuals were identified. The 12 associated funerary objects are 1 lithic core, 1 biface fragment, 4 bags of soil, 1 small piece of red ochre, 2 hematite beads, 2 pieces of unworked hematite, and 1 piece of unworked chert. Documentation indicated that the site dates to the Late Woodland/Early Mississippian (A.D. 1130–1160).

In 1977, human remains representing, at minimum, 17 individuals (11 adults, three sub-adults, and three infants) and 798 associated funerary objects were removed from Lick Springs Mound (23RA83) in Ralls County, MO. Materials were collected during archeological testing by the University of Nebraska, Lincoln, in advance of the construction of the dam to impound the Salt River for the creation of Mark Twain Lake. The human remains and objects were originally housed at the University of Missouri, Columbia. In February 2007, the collection was moved to Illinois State Museum, Springfield, where it is located today. The individuals are represented by cranial, postcranial, teeth, mandible, and long bone fragments. The human remains represent three male adults, eight adults of unknown sex, three sub-adults of unknown sex, and three infants of unknown sex. No known individuals were identified. The 798 associated funerary objects are 1 white chert notched biface, 1 small projectile point, 1 projectile point base, 13 pieces of burned limestone, 402 chert flakes/debitage, 1 small piece of fired clay, 184 ceramic sherds, 172 pieces of fired clay (daub), 2 small bags of burned limestone, and 21 hematite fragments. Documentation indicated that the site dates to the Late Woodland (A.D. 400–900).

In 1976, human remains representing, at minimum, one adult individual and 789 associated funerary objects were removed from Muskrat Run Site (23RA151) in Ralls County, MO. Materials were collected during archeological excavations as part of the ''Cannon Reservoir Human Ecology Project'' by the University of Nebraska, Lincoln, in advance of the construction of the dam to impound the Salt River for the creation of Mark Twain Lake. The human remains and objects were originally housed at the University of Missouri, Columbia. In February 2007, the collection was moved to Illinois State Museum, Springfield, where it is located today. The one adult individual is represented by lower long bone fragments, small postcranial fragments, and one foot element, and is of

unknown sex. No known individual was identified. The 789 associated funerary objects are 1 biface fragment, 486 lithic flakes, 1 piece of miscellaneous stone (possible sandstone abrader), 1 piece of hematite, 2 pieces of ochre, 36 miscellaneous stones, 17 ceramic sherds, 34 pieces of daub (fired clay), 194 pieces of unmodified fauna, 3 bags of unsorted water screened material, 12 bags of flotation material, and 2 small bags of pollen samples. Documentation indicated that the site dates to the Late Archaic (3000–1000 B.C.) and Lake Woodland (A.D. 400–900).

In 1975, human remains representing, at minimum, one adult individual and no associated funerary objects were removed from the Foss Site (23RA271) in Ralls County, MO. Materials were collected during archeological test excavations by the University of Nebraska, Lincoln, in advance of the construction of the dam to impound the Salt River for the creation of Mark Twain Lake. The human remains and objects were originally housed at the University of Missouri, Columbia. In February 2007, the collection was moved to Illinois State Museum, Springfield, where it is located today. The one adult individual is represented by burned cranial fragments and teeth and is of unknown sex. No known individual was identified. No associated funerary objects are present. Documentation indicated that the site dates to Middle Archaic (5000–3000 B.C.) and Late Woodland (A.D. 400–900).

In 1960 human remains representing, at minimum, seven individuals (six adults and one sub-adult) and 76 associated funerary objects were removed from Shaver Mounds (23RA315) in Ralls County, MO. Materials were collected during archeological testing by the University of Missouri, Columbia, in advance of the construction of the dam to impound the Salt River for the creation of Mark Twain Lake. The human remains and objects were originally housed at the University of Missouri, Columbia. In February 2007, the collection was moved to Illinois State Museum, Springfield, IL, where it is located today. The human remains are very fragmentary and consist of partial long bone fragments, cranial, mandible, and dental fragments that represent six adults of unknown sex and one sub-adult of unknown sex. No known individuals were identified. The 76 associated funerary objects are 1 soil sample, 1 reworked Dalton point drill, 1 chipped stone scraper, 2 bifaces, 65 chert flakes, 2 pieces of red ochre, 1 piece of hematite, 1 chert biface, 1 grit-tempered ceramic sherd, and 1 small seed. Documentation indicated that the site dates to Late Woodland (AD 400–900).

In 1962, human remains representing, at minimum, four individuals (two adults, one sub-adult, and one infant) and two associated funerary objects were removed from Starr Mounds (23RA321) in Ralls County, MO. Materials were collected during archeological testing by the University of Missouri, Columbia, in advance of the construction of the dam to impound the Salt River for the creation of Mark Twain Lake. The human remains and objects were originally housed at the University of Missouri, Columbia. In February 2007, the collection was moved to Illinois State Museum, Springfield, where it is located today. The human remains were bundle burials. The adult male is represented by a maxilla and mandible and a nearly complete pelvis. The adult of unknown sex is represented by fragments of cranial and dental remains. The one sub-adult of unknown sex is represented by loose teeth, and the one infant of unknown is represented by a few fragments of dental and vertebra remains. No individuals were identified. The two associated funerary objects are 1 chert blade and 1 cord marked ceramic sherd. Documentation indicated that the site dates to the Late Woodland (A.D. 400–900).

In 1962, human remains representing, at minimum, seven individuals (four adults, one sub-adult, and two infants) and 131 associated funerary objects were removed from Calvert Mound (23RA325) in Ralls County, MO. Materials were collected during archeological testing by the University of Missouri, Columbia, in advance of the construction of the dam to impound the Salt River for the creation of Mark Twain Lake. The human remains and objects were originally housed at the University of Missouri, Columbia. In February 2007, the collection was moved to Illinois State Museum, Springfield, where it is located today. Two burial chambers within the mound contained multiple interments. The human remains consisted of cranial fragments, loose teeth, and fragmentary postcranial elements of four adults of unknown sex. The one sub-adult of unknown sex is represented by cranial fragments and loose teeth, and the one infant of unknown sex is represented by cranial fragments, long bone fragments and postcranial fragments. No known individuals were identified. The 131 associated funerary objects are 21 pieces of unmodified fauna, 1 piece of wood, 3 seed/nutshell fragments, 53 pieces of shell (mostly turtle), 10 miscellaneous stones, 4 fragments of charcoal, 32 small lithic flakes, 4 pieces of modified fauna, 2 ceramic sherds, and 1 large sandstone hoe. Documentation indicated that the site dates to the Late Woodland (A.D. 400–900).

Determinations Made by the U.S. Army Corps of Engineers, St. Louis District

Officials of the St. Louis District have determined that:

- Pursuant to 25 U.S.C. 3001(9), the human remains described in this notice are Native American based on morphological characteristics of the skeletal remains, archeological context, and objects associated with the human remains.
- Pursuant to 25 U.S.C. 3001(9), the human remains described in this notice represent the physical remains of 308 individuals of Native American ancestry.
- Pursuant to 25 U.S.C. 3001(3)(A), the 5,899 objects described in this notice are reasonably believed to have been placed with or near individual human remains at the time of death or later as part of the death rite or ceremony.
- Pursuant to 25 U.S.C. 3001(2), a relationship of shared group identity cannot be reasonably traced between the Native American human remains and associated funerary objects and any present-day Indian tribe.
- According to a final judgment of the Indian Claims Commission, the land from which the Native American human remains and associated funerary objects were removed is the aboriginal land of the Sac & Fox Nation of Missouri in Kansas and Nebraska, the Sac & Fox Nation, Oklahoma, and the Sac & Fox Tribe of the Mississippi in Iowa.
- Treaties in 1804, 1815, and 1816, indicate the land from which the Native American human remains and associated funerary objects were removed was ceded by the Sac and Fox and is the aboriginal land of the Sac & Fox Nation of Missouri in Kansas and Nebraska, the Sac & Fox Nation, Oklahoma, and the Sac & Fox Tribe of the Mississippi in Iowa.
- Pursuant to 43 CFR 10.11(c)(1), the disposition of the human remains and associated funerary objects may be to the Sac & Fox Nation of Missouri in Kansas and Nebraska, the Sac & Fox Nation, Oklahoma, and the Sac & Fox Tribe of the Mississippi in Iowa.

Additional Requestors and Disposition

Representatives of any Indian tribe or Native Hawaiian organization not identified in this notice that wish to request transfer of control of these

human remains and associated funerary objects should submit a written request with information in support of the request to U.S. Army Corps of Engineers, St. Louis District, ATTN: CEMVS–EC–Z (Michael K. Trimble, Ph.D.), 1222 Spruce Street, St. Louis, MO 63103–2833, telephone (314) 331–8466, email *michael.k.trimble@usace.army.mil,* by July 9, 2015. After that date, if no additional requestors have come forward, transfer of control of the human remains and associated funerary objects to the Sac & Fox Nation of Missouri in Kansas and Nebraska, the Sac & Fox Nation, Oklahoma, and the Sac & Fox Tribe of the Mississippi in Iowa may proceed.

The U.S. Army Corps of Engineers, St. Louis District is responsible for notifying the Sac & Fox Nation of Missouri in Kansas and Nebraska, the Sac & Fox Nation, Oklahoma, and the Sac & Fox Tribe of the Mississippi in Iowa that this notice has been published.

Dated: May 6, 2015.

Mariah Soriano,

Acting Manager, National NAGPRA Program.

[FR Doc. 2015–14111 Filed 6–8–15; 8:45 am]

BILLING CODE 4312–50–P

DEPARTMENT OF THE INTERIOR

National Park Service

[NPS–WASO–NAGPRA–18305]; [PPWOCRADN0–PCU00RP15.R50000]

Notice of Inventory Completion: History Colorado, Formerly Colorado Historical Society, Denver, CO

AGENCY: National Park Service, Interior.

ACTION: Notice.

SUMMARY: History Colorado, formerly Colorado Historical Society, has completed an inventory of human remains in consultation with the appropriate Indian tribes or Native Hawaiian organizations, and has determined that there is a cultural affiliation between the human remains and present-day Indian tribes or Native Hawaiian organizations. Lineal descendants or representatives of any Indian tribe or Native Hawaiian organization not identified in this notice that wish to request transfer of control of these human remains should submit a written request to History Colorado. If no additional requestors come forward, transfer of control of the human remains to the lineal descendants, Indian tribes, or Native Hawaiian organizations stated in this notice may proceed.

DATES: Lineal descendants or representatives of any Indian tribe or Native Hawaiian organization not identified in this notice that wish to request transfer of control of these human remains should submit a written request with information in support of the request to History Colorado at the address in this notice by July 9, 2015.

ADDRESSES: Sheila Goff, NAGPRA Liaison, History Colorado, 1200 Broadway, Denver, CO 80203, telephone (303) 866–4531, email *sheila.goff@state.co.us.*

SUPPLEMENTARY INFORMATION: Notice is here given in accordance with the Native American Graves Protection and Repatriation Act (NAGPRA), 25 U.S.C. 3003, of the completion of an inventory of human remains under the control of History Colorado, Denver, CO. The human remains were removed from site 5WL48, in Weld County, CO.

This notice is published as part of the National Park Service's administrative responsibilities under NAGPRA, 25 U.S.C. 3003(d)(3). The determinations in this notice are the sole responsibility of the museum, institution, or Federal agency that has control of the Native American human remains. The National Park Service is not responsible for the determinations in this notice.

Consultation

A detailed assessment of the human remains was made by History Colorado professional staff in consultation with representatives of the Arapaho Tribe of the Wind River Reservation, Wyoming; Cheyenne and Arapaho Tribes, Oklahoma (formerly the Cheyenne-Arapaho Tribes of Oklahoma); Comanche Nation, Oklahoma; Fort Sill Apache Tribe of Oklahoma; Kiowa Indian Tribe of Oklahoma; Northern Cheyenne Tribe of the Northern Cheyenne Indian Reservation, Montana; Oglala Sioux Tribe (previously listed as the Oglala Sioux Tribe of the Pine Ridge Reservation, South Dakota); Pawnee Nation of Oklahoma; Southern Ute Indian Tribe of the Southern Ute Reservation, Colorado; Three Affiliated Tribes of the Fort Berthold Reservation, North Dakota; Ute Indian Tribe of the Uintah & Ouray Reservation, Utah; Ute Mountain Tribe of the Ute Mountain Reservation, Colorado, New Mexico & Utah; and Wichita and Affiliated Tribes (Wichita, Keechi, Waco & Tawakonie), Oklahoma. The Rosebud Sioux Tribe of the Rosebud Indian Reservation, South Dakota and the Shoshone Tribe of the Wind River Reservation, Wyoming, were invited to consult but did not participate.

History and Description of the Remains

In 1974, human remains representing, at minimum, three individuals were removed from site 5WL58 in Weld County, CO. Staff and students from the University of Northern Colorado inadvertently removed the human remains while excavating the site as part of a field school. The human remains were highly fragmentary and in 1974, thought to be faunal remains. The remains were identified as human in 2012, by History Colorado staff, who were processing the faunal assemblage. The human remains were transferred to the Culture and Community Department of the museum for NAGPRA compliance. Osteological analysis indicates the partial human remains represent three subadults of Native American ancestry. No known individuals were identified. No associated funerary objects are present.

Radiocarbon dates from the site where the human remains were removed ranges from 250 B.C. to A.D. 950. These dates, along with attributes of the site including site location on the northeastern plains of Colorado, projectile points, cord-marked pottery, and site architecture, indicate a Plains Woodland occupation. Available evidence indicates there is a traditional association between the Ute people and the geographical area from where the human remains were recovered. Ancestral Ute people may have interacted with Plains Woodland people on the northeastern plains of Colorado. However the preponderance of evidence including geographical, biological, archeological, oral tradition, and expert opinion is associated with Plains Woodlands occupations whose descendants are currently recognized as the Pawnee Nation of Oklahoma; Three Affiliated Tribes of the Fort Berthold Reservation, North Dakota; and Wichita and Affiliated Tribes (Wichita, Keechi, Waco & Tawakonie), Oklahoma.

Determinations Made by History Colorado

Officials of History Colorado have determined that:

- Pursuant to 25 U.S.C. 3001(9), the human remains described in this notice represent the physical remains of three individuals of Native American ancestry.
- Pursuant to 25 U.S.C. 3001(2), there is a relationship of shared group identity that can be reasonably traced between the Native American human remains and the Pawnee Nation of Oklahoma; Three Affiliated Tribes of the Fort Berthold Reservation, North Dakota; and Wichita and Affiliated

Tribes (Wichita, Keechi, Waco & Tawakonie), Oklahoma.

Additional Requestors and Disposition

Lineal descendants or representatives of any Indian tribe or Native Hawaiian organization not identified in this notice that wish to request transfer of control of these human remains should submit a written request with information in support of the request to Sheila Goff, NAGPRA Liaison, History Colorado, 1200 Broadway, Denver, CO 80203, telephone (303) 866–4531, email *sheila.goff@state.co.us,* by July 9, 2015. After that date, if no additional requestors have come forward, transfer of control of the human remains to the Pawnee Nation of Oklahoma; Three Affiliated Tribes of the Fort Berthold Reservation, North Dakota; and Wichita and Affiliated Tribes (Wichita, Keechi, Waco & Tawakonie), Oklahoma, may proceed.

History Colorado is responsible for notifying the Arapaho Tribe of the Wind River Reservation, Wyoming; Cheyenne and Arapaho Tribes, Oklahoma (formerly the Cheyenne-Arapaho Tribes of Oklahoma); Comanche Nation, Oklahoma; Fort Sill Apache Tribe of Oklahoma; Kiowa Indian Tribe of Oklahoma; Northern Cheyenne Tribe of the Northern Cheyenne Indian Reservation, Montana; Oglala Sioux Tribe (previously listed as the Oglala Sioux Tribe of the Pine Ridge Reservation, South Dakota); Pawnee Nation of Oklahoma; Rosebud Sioux Tribe of the Rosebud Indian Reservation, South Dakota; Shoshone Tribe of the Wind River Reservation, Wyoming; Southern Ute Indian Tribe of the Southern Ute Reservation, Colorado; Three Affiliated Tribes of the Fort Berthold Reservation, North Dakota; Ute Indian Tribe of the Uintah & Ouray Reservation, Utah; Ute Mountain Tribe of the Ute Mountain Reservation, Colorado, New Mexico & Utah; and Wichita and Affiliated Tribes (Wichita, Keechi, Waco & Tawakonie), Oklahoma, that this notice has been published.

Dated: May 11, 2015.

Mariah Soriano,

Acting Manager, National NAGPRA Program.

[FR Doc. 2015–14110 Filed 6–8–15; 8:45 am]

BILLING CODE 4312–50–P

DEPARTMENT OF THE INTERIOR

National Park Service

[NPS–WASO–NAGPRA–18274; PPWOCRADN0–PCU00RP15.R50000]

Notice of Intent To Repatriate Cultural Items: Longyear Museum of Anthropology, Colgate University, Hamilton, NY

AGENCY: National Park Service, Interior.

ACTION: Notice.

SUMMARY: The Longyear Museum of Anthropology, in consultation with the appropriate Indian tribes or Native Hawaiian organizations, has determined that the cultural items listed in this notice meet the definition of unassociated funerary objects. Lineal descendants or representatives of any Indian tribe or Native Hawaiian organization not identified in this notice that wish to claim these cultural items should submit a written request to the Longyear Museum of Anthropology. If no additional claimants come forward, transfer of control of the cultural items to the lineal descendants, Indian tribes, or Native Hawaiian organizations stated in this notice may proceed.

DATES: Lineal descendants or representatives of any Indian tribe or Native Hawaiian organization not identified in this notice that wish to claim these cultural items should submit a written request with information in support of the claim to the Longyear Museum of Anthropology at the address in this notice by July 9, 2015.

ADDRESSES: Dr. Jordan Kerber, Longyear Museum of Anthropology, Department of Sociology and Anthropology, Colgate University, 13 Oak Drive, Hamilton, NY 13346, telephone (315) 228–7559, email *jkerber@colgate.edu.*

SUPPLEMENTARY INFORMATION: Notice is here given in accordance with the Native American Graves Protection and Repatriation Act (NAGPRA), 25 U.S.C. 3005, of the intent to repatriate cultural items under the control of the Longyear Museum of Anthropology, Colgate University, Hamilton, NY, that meet the definition of unassociated funerary objects under 25 U.S.C. 3001.

This notice is published as part of the National Park Service's administrative responsibilities under NAGPRA, 25 U.S.C. 3003(d)(3). The determinations in this notice are the sole responsibility of the museum, institution, or Federal agency that has control of the Native American cultural items. The National Park Service is not responsible for the determinations in this notice.

History and Description of the Cultural Items

At an unknown date, 54 cultural items were removed from one or more unknown Native American graves at one or more unknown locations in Walla Walla County, WA. All of these objects are part of the Hagen Collection in the Longyear Museum of Anthropology and were donated to, or purchased by, the Longyear Museum of Anthropology on an unknown date between 1948 and 1979. The 54 unassociated funerary objects are 53 tubular copper beads (Longyear Museum of Anthropology Index Number 373, Catalog Number A280), which are catalogued as from a ''Cayuse Indian grave,'' and one copper pendant (Longyear Museum of Anthropology Index Number 377, Catalog Number A284), which is catalogued as from ''a Cayuse grave.''

Consultation was initiated on February 11, 2015, by the Longyear Museum of Anthropology with the Confederated Tribes of the Colville Reservation and the Confederated Tribes of the Umatilla Indian Reservation (previously listed as the Confederated Tribes of the Umatilla Reservation, Oregon). On February 25, 2015, the Confederated Tribes of the Colville Reservation notified the Longyear Museum of Anthropology and the Confederated Tribes of the Umatilla Indian Reservation that these 54 unassociated funerary objects are not from their traditional territory and that they therefore deferred to the Confederated Tribes of the Umatilla Indian Reservation concerning the repatriation of the objects. The Confederated Tribes of the Umatilla Indian Reservation submitted to the Longyear Museum of Anthropology a NAGPRA cultural affiliation claim, in the form of a letter and report dated March 13, 2015, requesting to repatriate the 54 unassociated funerary objects.

The information presented in this report indicates that the Walla Walla County area of Washington is an area traditionally and aboriginally used by the Umatilla Tribes and ceded to the U.S. Government following the treaty of 1855. The Umatilla Tribes are direct descendant communities of the *Weyíiletpuu* (Cayuse), *Imatalamláma* (Umatilla), and *Walúulapam* (Walla Walla), Native people who used the lower Snake River and Columbia River since time immemorial, both of which run along the border of Walla Walla County. Enrolled members of the Umatilla Tribes have documented that their ancestors were buried along the lower Snake and Columbia Rivers. These areas have also been important

habitation, fishing, hunting, and burial areas in continual use by the Umatilla Tribes. The report further indicates that the 54 unassociated funerary objects are historic, dating within the post-European contact era, or since the early 1800s, and that they are typical of personal items often buried with the deceased.

Determinations Made by the Longyear Museum of Anthropology

Officials of the Longyear Museum of Anthropology have determined that:

- Pursuant to 25 U.S.C. 3001(3)(B), the 54 cultural items described above are reasonably believed to have been placed with or near individual human remains at the time of death or later as part of the death rite or ceremony and are believed, by a preponderance of the evidence, to have been removed from one or more specific burial sites of one or more Native American individuals.
- Pursuant to 25 U.S.C. 3001(2), there is a relationship of shared group identity that can be reasonably traced between the unassociated funerary objects and the Confederated Tribes of the Umatilla Indian Reservation (previously listed as the Confederated Tribes of the Umatilla Reservation, Oregon).

Additional Requestors and Disposition

Lineal descendants or representatives of any Indian tribe or Native Hawaiian organization not identified in this notice that wish to claim these cultural items should submit a written request with information in support of the claim to Dr. Jordan Kerber, Longyear Museum of Anthropology, Department of Sociology and Anthropology, Colgate University, 13 Oak Drive, Hamilton, NY 13346, telephone (315) 228–7559, email *jkerber@colgate.edu,* by July 9, 2015. After that date, if no additional claimants have come forward, transfer of control of the unassociated funerary objects to the Confederated Tribes of the Umatilla Indian Reservation (previously listed as the Confederated Tribes of the Umatilla Reservation, Oregon) may proceed.

The Longyear Museum of Anthropology is responsible for notifying the Confederated Tribes of the Umatilla Indian Reservation (previously listed as the Confederated Tribes of the Umatilla Reservation, Oregon) that this notice has been published.

Dated: May 6, 2015.

Mariah Soriano,

Acting Manager, National NAGPRA Program.

[FR Doc. 2015–14098 Filed 6–8–15; 8:45 am]

BILLING CODE 4312–50–P

DEPARTMENT OF THE INTERIOR

National Park Service

[NPS–WASO–NAGPRA–18272; PPWOCRADN0–PCU00RP15.R50000]

Notice of Inventory Completion: U.S. Department of the Interior, National Park Service, Everglades National Park, Homestead, FL

AGENCY: National Park Service, Interior.

ACTION: Notice.

SUMMARY: The U.S. Department of the Interior, National Park Service, Everglades National Park has completed an inventory of human remains and associated funerary objects, in consultation with the appropriate Indian tribes or Native Hawaiian organizations, and has determined that there is no cultural affiliation between the human remains and associated funerary objects and any present-day Indian tribes or Native Hawaiian organizations. Representatives of any Indian tribe or Native Hawaiian organization not identified in this notice that wish to request transfer of control of these human remains and associated funerary objects should submit a written request to Everglades National Park. If no additional requestors come forward, transfer of control of the human remains and associated funerary objects to the Indian tribes or Native Hawaiian organizations stated in this notice may proceed.

DATES: Representatives of any Indian tribe or Native Hawaiian organization not identified in this notice that wish to request transfer of control of these human remains and associated funerary objects should submit a written request with information in support of the request to the Everglades National Park at the address in this notice by July 9, 2015.

ADDRESSES: Pedro Ramos, Superintendent, Everglades National Park, 40001 State Road 9336, Homestead, FL 33034, telephone (305) 242–7713, email *pedro_ramos@nps.gov.*

SUPPLEMENTARY INFORMATION: Notice is here given in accordance with the Native American Graves Protection and Repatriation Act (NAGPRA), 25 U.S.C. 3003, of the completion of an inventory of human remains and associated funerary objects under the control of the U.S. Department of the Interior, National Park Service, Everglades National Park, Homestead, FL. The human remains and associated funerary objects were removed from Everglades National Park in Monroe, Collier, and Dade Counties, FL.

This notice is published as part of the National Park Service's administrative responsibilities under NAGPRA, 25 U.S.C. 3003(d)(3) and 43 CFR 10.11(d). The determinations in this notice are the sole responsibility of the Superintendent, Everglades National Park.

Consultation

A detailed assessment of the human remains was made by Everglades National Park professional staff in consultation with representatives of the Miccosukee Tribe of Indians and the Seminole Tribe of Florida (previously listed as the Seminole Tribe of Florida (Dania, Big Cypress, Brighton, Hollywood & Tampa Reservations)).

History and Description of the Human Remains

In 1956, human remains representing, at minimum, 17 individuals were removed from a small key island in Monroe County, FL. The human remains were removed from the site by collectors and donated to the Miami Science Museum in the 1960s. In 2004, the Miami Science Museum donated the human remains to Everglades National Park. No known individuals were identified. No associated funerary objects are present.

In 1960, human remains representing, at minimum, one individual were removed from a key island in Monroe County, FL. The human remains were collected by park staff from a shell midden after hurricane damage. No known individuals were identified. No associated funerary objects are present.

In the 1960s, human remains representing, at minimum, one individual, were removed from a key island in Monroe County, FL. The human remains were collected during a general surface survey along the southwest and eastern side of the key conducted by park staff. No known individuals were identified. No associated funerary objects are present.

In the 1960s, human remains representing, at minimum, one individual, were removed from a key island in Monroe County, FL. The human remains were removed during a park-sponsored survey on the key's western end. No known individuals were identified. No associated funerary objects are present.

In the 1960s, human remains representing, at minimum, one individual, were removed from a small key island in Collier County, FL. The human remains were removed from an unknown provenience during a park-sponsored survey. No known

individuals were identified. No associated funerary objects are present.

In 1964, human remains representing, at minimum, one individual were removed from a large key island in Monroe County, FL. The human remains were collected from an unknown provenience by park staff. No known individuals were identified. No associated funerary objects are present.

In 1964, human remains representing, at minimum, one individual, were removed from a small key island in Monroe County, FL. The human remains were removed during a park-sponsored site survey from a mangrove marsh on the east side of the island. No known individuals were identified. No associated funerary objects are present.

In 1964, human remains representing, at minimum, one individual, were removed from a large key island in Collier County, FL. The human remains were removed by park staff from a small burial mound at the site. No known individuals were identified. No associated funerary objects are present.

In 1964, human remains representing, at minimum, two individuals, were removed from a key island in Monroe County, FL. The human remains were removed from an unknown provenience during a survey by park staff. No known individuals were identified. No associated funerary objects are present.

In 1968, human remains representing, at minimum, one individual were removed from a mound in Monroe County, FL. The human remains were removed during a park-sponsored excavation. No known individuals were identified. The 192 associated funerary objects are 15 metal fragments, 4 metal vessel fragments, 1 indeterminate nail fragment, 1 Cane Patch Incised sherd, 112 Glades Plain sherds, 7 Glades Incised sherds, 20 Glades Red sherds, 2 Fort Drum Punctated sherds, 2 Sanibel Incised sherds, 1 Weeden Island Plain sherd, 9 St. Johns Plain sherds, 3 Goodland Plain sherds, 4 untyped ceramic sherds, 2 unfired clay fragments, 6 pieces of drilled bone, 1 worked bone, and 2 worked shells.

In 1983, human remains representing, at minimum, one individual were removed from a hammock in Dade County, FL. The human remains were removed from an excavated posthole test during an archeological site survey. No known individuals were identified. No associated funerary objects are present.

In 1983, human remains representing, at minimum, one individual were removed from a tree island in Monroe County, FL. The human remains were removed from a posthole test during an archeological site survey. No known individuals were identified. No associated funerary objects are present.

In 1984, human remains representing, at minimum, one individual, were removed from a key in Monroe County, FL. The human remains were collected from a southwest beach on the key and sent to the Federal Bureau of Investigation (FBI) for assessment. The human remains were then transferred to the Smithsonian Institution where they were assessed and determined to be non-historic. In 1985, the human remains were returned to Everglades National Park. Professional staff at Everglades National Park has determined that the human remains are Native American. No known individuals were identified. No associated funerary objects are present.

Cultural affiliation of the human remains described above could not be determined due to uncertain provenience, lack of culturally affiliated historic artifacts, and/or the antiquity of the human remains.

Determinations Made by Everglades National Park

Officials of Everglades National Park have determined that:

- Pursuant to 25 U.S.C. 3001(9), the human remains described in this notice are Native American based on archeological provenience with Native American sites and the antiquity of the human remains.
- Pursuant to 25 U.S.C. 3001(9), the human remains described in this notice represent the physical remains of 30 individuals of Native American ancestry.
- Pursuant to 25 U.S.C. 3001(3)(A), the 192 objects described in this notice are reasonably believed to have been placed with or near individual human remains at the time of death or later as part of the death rite or ceremony. The National Park Service intends to convey the associated funerary objects to the tribes pursuant to 16 U.S.C. 18f–2.
- Pursuant to 25 U.S.C. 3001(2), a relationship of shared group identity cannot be reasonably traced between the Native American human remains and associated funerary objects and any present-day Indian tribe.
- According to final judgments of the Indian Claims Commission or the Court of Federal Claims, the land from which the Native American human remains and associated funerary objects were removed is the aboriginal land of the Miccosukee Tribe of Indians and the Seminole Tribe of Florida (previously listed as the Seminole Tribe of Florida (Dania, Big Cypress, Brighton, Hollywood & Tampa Reservations)).
- Treaties, Acts of Congress, or Executive Orders, indicate that the land from which the Native American human remains and associated funerary objects were removed is the aboriginal land of the Miccosukee Tribe of Indians and the Seminole Tribe of Florida (previously listed as the Seminole Tribe of Florida (Dania, Big Cypress, Brighton, Hollywood & Tampa Reservations)).
- Pursuant to 43 CFR 10.11(c)(1), the disposition of the human remains and associated funerary objects may be to the Miccosukee Tribe of Indians and the Seminole Tribe of Florida (previously listed as the Seminole Tribe of Florida (Dania, Big Cypress, Brighton, Hollywood & Tampa Reservations)).

Additional Requestors and Disposition

Representatives of any Indian tribe or Native Hawaiian organization not identified in this notice that wish to request transfer of control of these human remains and associated funerary objects should submit a written request with information in support of the request to Pedro Ramos, Superintendent, Everglades National Park, 40001 State Road 9336, Homestead, FL 33034, telephone (305) 242–7713, email *pedro_ramos@nps.gov,* by July 9, 2015. After that date, if no additional requestors have come forward, transfer of control of the human remains and associated funerary objects to the Miccosukee Tribe of Indians and the Seminole Tribe of Florida (previously listed as the Seminole Tribe of Florida (Dania, Big Cypress, Brighton, Hollywood & Tampa Reservations)) may proceed.

Everglades National Park is responsible for notifying the Miccosukee Tribe of Indians and the Seminole Tribe of Florida (previously listed at the Seminole Tribe of Florida (Dania, Big Cypress, Brighton, Hollywood & Tampa Reservations)) that this notice has been published.

Dated: May 6, 2015.

Mariah Soriano,

Acting Manager, National NAGPRA Program.

[FR Doc. 2015–14099 Filed 6–8–15; 8:45 am]

BILLING CODE 4312–50–P

DEPARTMENT OF THE INTERIOR

National Park Service

[NPS–WASO–NAGPRA–18306]; [PPWOCRADN0–PCU00RP15.R50000]

Notice of Inventory Completion: U.S. Department of the Interior, National Park Service, Petrified Forest National Park, Petrified Forest, AZ; Correction

AGENCY: National Park Service, Interior.

ACTION: Notice; correction.

SUMMARY: The U.S. Department of the Interior, National Park Service, Petrified Forest National Park has corrected a Notice of Inventory Completion published in the **Federal Register** on April 28, 2015. This notice corrects the list of The Invited Tribes.

ADDRESSES: Brad Traver, Superintendent, Petrified Forest National Park, Box 2217, Petrified Forest, AZ 86028, telephone (928) 524–6228 x225, email *brad_traver@nps.gov.*

SUPPLEMENTARY INFORMATION: Notice is here given in accordance with the Native American Graves Protection and Repatriation Act (NAGPRA), 25 U.S.C. 3003, of the correction of a Notice of Inventory Completion for human remains and associated funerary objects under the control of the U.S. Department of the Interior, National Park Service, Petrified Forest National Park, Petrified Forest, AZ.

This notice is published as part of the National Park Service's administrative responsibilities under NAGPRA, 25 U.S.C. 3003(d)(3). The determinations in this notice are the sole responsibility of the Superintendent, Petrified Forest National Park.

This notice corrects the list of The Invited Tribes published in a Notice of Inventory Completion in the **Federal Register** (80 FR 23573, April 28, 2015). The Pueblo of Acoma, New Mexico was inadvertently included in both The Consulted Tribes and The Invited Tribes, rather than just The Consulted Tribes.

Correction

In the **Federal Register** (80 FR 23573, April 28, 2015), paragraph seven is corrected by removing Pueblo of Acoma, New Mexico.

Petrified Forest National Park is responsible for notifying The Consulted Tribes and The Invited Tribes that this notice has been published.

Dated: May 11, 2015.

Mariah Soriano,

Acting Manager, National NAGPRA Program.

[FR Doc. 2015–14108 Filed 6–8–15; 8:45 am]

BILLING CODE 4312–50–P

DEPARTMENT OF THE INTERIOR

National Park Service

[NPS–WASO–NAGPRA–18271; PPWOCRADN0–PCU00RP15.R50000]

Notice of Intent To Repatriate Cultural Items: Palm Springs Art Museum, Palm Springs, CA

AGENCY: National Park Service, Interior.

ACTION: Notice.

SUMMARY: The Palm Springs Art Museum, in consultation with the appropriate Indian tribes or Native Hawaiian organizations, has determined that the cultural item listed in this notice meets the definition of a sacred object. Lineal descendants or representatives of any Indian tribe or Native Hawaiian organization not identified in this notice that wish to claim this cultural item should submit a written request to the Palm Springs Art Museum. If no additional claimants come forward, transfer of control of the cultural item to the lineal descendants, Indian tribes, or Native Hawaiian organizations stated in this notice may proceed.

DATES: Lineal descendants or representatives of any Indian tribe or Native Hawaiian organization not identified in this notice that wish to claim this cultural item should submit a written request with information in support of the claim to the Palm Springs Art Museum at the address in this notice by July 9, 2015.

ADDRESSES: Shelley Orlowski, Registrar, Palm Springs Art Museum, 101 Museum Drive, Palm Springs, CA 92263, telephone (760) 322–4805, email *Sorlowski@psmuseum.org.*

SUPPLEMENTARY INFORMATION: Notice is here given in accordance with the Native American Graves Protection and Repatriation Act (NAGPRA), 25 U.S.C. 3005, of the intent to repatriate a cultural item under the control of the Palm Springs Art Museum, Palm Springs, CA, that meets the definition of sacred objects under 25 U.S.C. 3001.

This notice is published as part of the National Park Service's administrative responsibilities under NAGPRA, 25 U.S.C. 3003(d)(3). The determinations in this notice are the sole responsibility of the museum, institution, or Federal agency that has control of the Native American cultural item. The National Park Service is not responsible for the determinations in this notice.

History and Description of the Cultural Item

Prior to 1988, one sacred object was removed from a shrine on the Pueblo of San Felipe in San Felipe Pueblo, NM. In 1988, George Shaw of Aspen, CO, purchased this object from a private dealer in Arizona. In 2004, Shaw sold the object to Perry J. Lewis of Danbury, CT. Lewis held the object in his private collection until December 18, 2012, when he gifted it to the Palm Springs Art Museum. The one sacred object is a Stone Mountain Lion Shrine Fetish.

On March 16, 2015, Ronald Tenorio, Governor of the Pueblo of San Felipe, New Mexico, sent a letter to the Palm Springs Art Museum claiming this object as a sacred cultural object. Four markers with inlay indicate to Governor Tenorio that this object is one that has been noted as missing from a shrine on the Pueblo of San Felipe, New Mexico.

Determinations Made by the Palm Springs Art Museum

Officials of the Palm Springs Art Museum have determined that*:*

- Pursuant to 25 U.S.C. 3001(3)(C), the cultural item described above is a specific ceremonial object needed by traditional Native American religious leaders for the practice of traditional Native American religions by their present-day adherents.
- Pursuant to 25 U.S.C. 3001(2), there is a relationship of shared group identity that can be reasonably traced between the sacred object and the Pueblo of San Felipe, New Mexico.

Additional Requestors and Disposition

Lineal descendants or representatives of any Indian tribe or Native Hawaiian organization not identified in this notice that wish to claim these cultural items should submit a written request with information in support of the claim to Shelley Orlowski, Registrar, Palm Springs Art Museum, 101 Museum Drive, Palm Springs, CA 92263, telephone (760) 322–4805, email *Sorlowski@psmuseum.org,* by July 9, 2015. After that date, if no additional claimants have come forward, transfer of control of the sacred object to the Pueblo of San Felipe, New Mexico, may proceed.

The Palm Springs Art Museum is responsible for notifying the Pueblo of San Felipe, New Mexico, that this notice has been published.

Dated: May 6, 2015.

Mariah Soriano,

Acting Manager, National NAGPRA Program.

[FR Doc. 2015–14114 Filed 6–8–15; 8:45 am]

BILLING CODE 4312–50–P

DEPARTMENT OF THE INTERIOR

Bureau of Reclamation

[RR02013000, XXXR5537F3, RX.19871110.1000000]

Notice of Availability and Notice of Public Hearings for the Draft Environmental Impact Statement/ Environmental Impact Report for the Mendota Pool Bypass and Reach 2B Improvements Project

AGENCY: Bureau of Reclamation, Interior.

ACTION: Notice.

SUMMARY: The Bureau of Reclamation and the State Lands Commission have made available for public review and comment the Mendota Pool Bypass and Reach 2B Improvements Project Draft Environmental Impact Statement/ Environmental Impact Report (EIS/EIR). The Mendota Pool Bypass and Reach 2B Improvements Project is a component of the San Joaquin River Restoration Program which seeks to restore flows to the San Joaquin River from Friant Dam to the confluence of the Merced River, and restore a self-sustaining Chinook salmon fishery in the river while reducing or avoiding adverse water supply impacts associated with Restoration Flows. The Project includes the construction, operation, and maintenance of the Mendota Pool Bypass and improvements in the San Joaquin River channel in Reach 2B to assist in achieving the San Joaquin River Restoration Program's Restoration Goal.

DATES: Written comments on the Draft EIS/EIR should be submitted on or before August 10, 2015.

Hearings to receive oral or written comments will be held on:

- Wednesday, July 8, 2015, from 6 to 9 p.m., Fresno, CA;
- Thursday, July 9, 2015, from 6 to 9 p.m., Los Banos, CA; and
- Friday, July 10, 2015, from 9 a.m. to 12 noon, Sacramento, CA.

Staff will be available to take comments and answer questions during this time.

ADDRESSES: Send written comments to Ms. Becky Victorine, Bureau of Reclamation, San Joaquin River Restoration Program Office, MP–170, 2800 Cottage Way, Sacramento, California 95825–1898; or via email to *Reach2B_EISEIR_Comments@restoresjr.net.*

Public hearings will be held in the following locations:

- Fresno—Piccadilly Inn Shaw, 2305 West Fresno Avenue, Fresno, CA.
- Los Banos—Los Banos Community Center, 645 7th Street, Los Banos, CA.
- Sacramento—Federal Center, 2800 Cottage Way Room C–1002, Sacramento, CA.

The Draft EIS/EIR may be viewed at the Bureau of Reclamation's Web site at *http://www.usbr.gov/mp/nepa/nepa_projdetails.cfm?Project_ID=4032.* Copies of the EIS/EIR are available for public inspection at several libraries and government offices.

To request a compact disc of the Draft EIS/EIR, please contact Ms. Becky Victorine as indicated above, or call (916) 978–4624.

FOR FURTHER INFORMATION CONTACT: Ms. Katrina Harrison, Program Engineer, Bureau of Reclamation, via email at *Reach2B_EISEIR_Comments@restoresjr.net,* or at (916) 978–5465. For information regarding California Environmental Quality Act, contact Mr. Christopher Huitt, Senior Environmental Scientist, California State Lands Commission, 100 Howe Avenue, Suite 100 South, Sacramento, CA 95825, (916) 574–2080; or via email to *christopher.huitt@slc.ca.gov.*

SUPPLEMENTARY INFORMATION: The Mendota Pool Bypass and Reach 2B Improvements Project (Project) includes the construction, operation, and maintenance of the Mendota Pool Bypass and improvements in Reach 2B of the San Joaquin River channel in Reach 2B. The Project is a key component to restoring flows and a self-sustaining Chinook salmon fishery to the San Joaquin River from Friant Dam to the confluence of the Merced River. Specifically, the Project consists of a floodplain width which would be capable of conveying at least 4,500 cubic feet per second (cfs), a method to bypass restoration flows around Mendota Pool, and a method to deliver water to Mendota Pool. The Project footprint extends from approximately 0.3 mile above the Chowchilla Bypass Bifurcation Structure to approximately one mile below the Mendota Dam in the area of Fresno and Madera counties, near the town of Mendota, California. The Draft EIS/EIR assesses the potential environmental effects of five alternatives being considered, which are described below.

Under the No-Action Alternative, the Project would not be implemented. Although future conditions would not include the components described below in the Action Alternatives, other components of the San Joaquin River Restoration Program (SJRRP) would be implemented following completion and receipt of appropriate environmental reviews and approvals. Likely future conditions include the SJRRP components analyzed in the Program EIS/EIR for the SJRRP, Restoration Flows similar to those that started January 2014, and other reasonably foreseeable actions expected to occur in the Project area. It is assumed for the No-Action Alternative that agriculture would continue in the study area, and cropland would be the dominant cover type, consistent with the existing condition. The No-Action Alternative generally assumes no channel or structural improvements would be made in Reach 2B, and Restoration Flows would be limited to the existing Reach 2B capacity.

All four Action Alternatives (Alternatives A, B, C, and D) would be designed to provide conveyance of at least 4,500 cfs in Reach 2B and through the Mendota Pool Bypass, and diversion and screening of up to 2,500 cfs from Reach 2B into Mendota Pool. Constructed elements common to the Action Alternatives include the provision of fish habitat and passage, seepage control measures, removal of existing levees and structures, and levee and structure construction and modification, among other activities.

Under Alternative A (Compact Bypass with Narrow Floodplain and South Canal), the Compact Bypass Channel would be constructed between Reach 2B and Reach 3 in order to bypass the Mendota Pool. Reach 3 of the San Joaquin River is located downstream of Reach 2B, from Mendota Dam to Sack Dam. Restoration Flows would enter Reach 2B, flow through the reach, then downstream to Reach 3 via the Compact Bypass Channel. The South Canal would be built to convey San Joaquin River water deliveries to Mendota Pool. The San Joaquin River Control Structure at the Chowchilla Bifurcation Structure would be removed and a bifurcation structure would be built at the head of the South Canal to control flood diversions into the Chowchilla Bypass and water delivery diversions into Mendota Pool. Fish passage facilities and a fish screen would be built at the South Canal Bifurcation Structure to provide passage around the structure and prevent fish being entrained in the diversion. A fish barrier would be built in Reach 3 to direct up-migrating fish into the Compact Bypass Channel and a new crossing would be built at the San Mateo Avenue crossing.

Alternative B (Compact Bypass with Consensus-Based Floodplain and Bifurcation Structure), the Preferred Alternative, would construct the Compact Bypass Channel between Reach 2B and Reach 3 to bypass the Mendota Pool. Restoration Flows would enter Reach 2B at the Chowchilla Bifurcation Structure, flow through

Reach 2B, then downstream to Reach 3 via the Compact Bypass Channel. The existing Chowchilla Bifurcation Structure would continue to divert San Joaquin River flows into the Chowchilla Bypass during flood operations, and a fish passage facility and control structure modifications would be included at the San Joaquin River Control Structure at the Chowchilla Bypass. A bifurcation structure would be built at the head of the Compact Bypass Channel to control diversions into Mendota Pool. Fish passage facilities and a fish screen would be built at the Compact Bypass Bifurcation Structure to provide passage around the structure and prevent fish being entrained in the diversion. The San Mateo Avenue crossing would be removed.

Under Alternative C (Fresno Slough Dam with Narrow Floodplain and Short Canal), Fresno Slough Dam would be constructed across Fresno Slough to contain the Mendota Pool, utilizing the existing river channel to bypass the Mendota Pool. Restoration Flows would enter Reach 2B at the Chowchilla Bifurcation Structure, flow through Reach 2B, then downstream to Reach 3 over the sill at Mendota Dam. The Mendota Pool would be contained south of the Fresno Slough Dam. The existing Chowchilla Bifurcation Structure would continue to divert San Joaquin River flows into the Chowchilla Bypass during flood operations, and a fish passage facility and control structure modifications would be included at the San Joaquin River Control Structure at the Chowchilla Bypass. The Short Canal would be built adjacent to the Fresno Slough Dam to convey San Joaquin River water deliveries to Mendota Pool. The Mendota Dam, along with a control structure built at the head of the Short Canal, would be used to control diversions into Mendota Pool through the Short Canal. Fish passage facilities at Mendota Dam and a fish screen on the Short Canal would be built to provide passage around Mendota Dam and prevent fish from being entrained in the diversion. A fish barrier would be built downstream of the Fresno Slough Dam to keep up-migrating fish in Reach 2B and a new crossing would be built at the San Mateo Avenue crossing.

Alternative D (Fresno Slough Dam with Wide Floodplain and North Canal) would consist of building the Fresno Slough Dam across Fresno Slough to contain the Mendota Pool, and utilizing the existing river channel to bypass the Mendota Pool. Restoration Flows would enter Reach 2B, flow through the reach, then downstream to Reach 3 over the sill at Mendota Dam. Mendota Pool would be contained south of the Fresno Slough Dam. The North Canal would be built to convey San Joaquin River water deliveries to Mendota Pool. The San Joaquin River Control Structure at the Chowchilla Bifurcation Structure would be removed and a bifurcation structure would be built at the head of the North Canal to control flood diversions into the Chowchilla Bypass and water delivery diversions into Mendota Pool. Fish passage facilities and a fish screen would be built at the North Canal bifurcation structure to provide passage around the structure and prevent fish being entrained in the diversion. A fish barrier would be built downstream of the Fresno Slough Dam to keep up-migrating fish in Reach 2B and the existing San Mateo Avenue crossing would be removed.

Public Review of Draft EIS

Copies of the Draft EIS/EIR are available for public review at the following locations:

1. Bureau of Reclamation, Mid-Pacific Region, Regional Library, 2800 Cottage Way, Sacramento, CA 95825.
2. Bureau of Reclamation, South-Central California Area Office, 1243 N Street, Fresno, CA 93721.
3. Los Banos Library, 1312 S 7th St, Los Banos, CA 93635.
4. Fresno County Public Library—Mendota Branch Library, 1246 Belmont Ave, Mendota, CA 93640.
5. Fresno County Public Library—Firebaugh Branch Library, 1315 O St, Firebaugh, CA 93622.
6. Natural Resources Library, U.S. Department of the Interior, 1849 C Street NW., Main Interior Building, Washington, DC 20240–0001.

Special Assistance for Public Hearings

If special assistance is required to participate in the public meeting, please contact Ms. Margaret Gidding at (916) 978–5461, or via email at *Reach2B_EISEIR_Comments@restoresjr.net.* Please contact Ms. Gidding at least 10 working days prior to the meeting. A telephone device for the hearing impaired (TTY) is available at 1–800–877–8339.

Public Disclosure

Before including your address, phone number, email address, or other personal identifying information in your comment, you should be aware that your entire comment—including your personal identifying information—may be made publicly available at any time. While you can ask us in your comment to withhold your personal identifying information from public review, we cannot guarantee that we will be able to do so.

Dated: June 3, 2015.

Pablo R. Arroyave,

Deputy Regional Director.

[FR Doc. 2015–14032 Filed 6–8–15; 8:45 am]

BILLING CODE 4332–90–P

INTERNATIONAL TRADE COMMISSION

[Investigation No. 337–TA–958]

Certain Automated Teller Machines and Point of Sale Devices and Associated Software Thereof; Institution of Investigation

AGENCY: U.S. International Trade Commission.

ACTION: Notice.

SUMMARY: Notice is hereby given that a complaint was filed with the U.S. International Trade Commission on May 4, 2015, under section 337 of the Tariff Act of 1930, as amended, 19 U.S.C. § 1337, on behalf of Global Cash Access, Inc. of Las Vegas, Nevada. The complaint alleges violations of section 337 based upon the importation into the United States, the sale for importation, and the sale within the United States after importation of certain automated teller machines and point of sale devices and associated software thereof by reason of infringement of certain claims of U.S. Patent No. 6,081,792 (''the '792 patent''), and that an industry in the United States exists as required by subsection (a)(2) of section 337. The complaint further alleges violations of section 337 based upon the importation into the United States, the sale for importation, and the sale within the United States after importation of certain automated teller machines and point of sale devices and associated software thereof by reason of false advertising, the threat or effect of which is to destroy or substantially injure an industry in the United States.

The complainant requests that the Commission institute an investigation and, after the investigation, issue a limited exclusion order and cease and desist orders.

ADDRESSES: The complaint, except for any confidential information contained therein, is available for inspection during official business hours (8:45 a.m. to 5:15 p.m.) in the Office of the Secretary, U.S. International Trade Commission, 500 E Street SW., Room 112, Washington, DC 20436, telephone (202) 205–2000. Hearing impaired individuals are advised that information on this matter can be obtained by

contacting the Commission's TDD terminal on (202) 205–1810. Persons with mobility impairments who will need special assistance in gaining access to the Commission should contact the Office of the Secretary at (202) 205–2000. General information concerning the Commission may also be obtained by accessing its internet server at *http://www.usitc.gov.* The public record for this investigation may be viewed on the Commission's electronic docket (EDIS) at *http://edis.usitc.gov.*

FOR FURTHER INFORMATION CONTACT: The Office of Unfair Import Investigations, U.S. International Trade Commission, telephone (202) 205–2560.

Authority: The authority for institution of this investigation is contained in section 337 of the Tariff Act of 1930, as amended, and in section 210.10 of the Commission's Rules of Practice and Procedure, 19 CFR § 210.10 (2015).

Scope of Investigation: Having considered the complaint, the U.S. International Trade Commission, on June 2, 2015, *Ordered That* —

(1) Pursuant to subsection (b) of section 337 of the Tariff Act of 1930, as amended, an investigation be instituted to determine:

(a) whether there is a violation of subsection (a)(1)(B) of section 337 in the importation into the United States, the sale for importation, or the sale within the United States after importation of certain automated teller machines and point of sale devices and associated software thereof by reason of infringement of one or more of claims 1–3, 5–7, and 9 of the '792 patent, and whether an industry in the United States exists as required by subsection (a)(2) of section 337; and

(b) whether there is a violation of subsection (a)(1)(A) of section 337 in the importation into the United States, the sale for importation, or the sale within the United States after importation of certain automated teller machines and point of sale devices and associated software thereof by reason of false advertising, the threat or effect of which is to destroy or substantially injure an industry in the United States.

(2) For the purpose of the investigation so instituted, the following are hereby named as parties upon which this notice of investigation shall be served:

(a) The complainant is: Global Cash Access, Inc., 7250 S Tenaya Way, Suite 100, Las Vegas, NV 89113.

(b) The respondents are the following entities alleged to be in violation of section 337, and are the parties upon which the complaint is to be served: NRT Technology Corp., 10 Compass Court, Toronto, Ontario M1S 5R3, Canada. NRT Technologies, Inc., 744 Pilot Road, Las Vegas, NV 89119.

(c) The Office of Unfair Import Investigations, U.S. International Trade Commission, 500 E Street SW., Suite 401, Washington, DC 20436; and

(3) For the investigation so instituted, the Chief Administrative Law Judge, U.S. International Trade Commission, shall designate the presiding Administrative Law Judge.

Responses to the complaint and the notice of investigation must be submitted by the named respondents in accordance with section 210.13 of the Commission's Rules of Practice and Procedure, 19 CFR § 210.13. Pursuant to 19 CFR §§ 201.16(e) and 210.13(a), such responses will be considered by the Commission if received not later than 20 days after the date of service by the Commission of the complaint and the notice of investigation. Extensions of time for submitting responses to the complaint and the notice of investigation will not be granted unless good cause therefor is shown.

Failure of a respondent to file a timely response to each allegation in the complaint and in this notice may be deemed to constitute a waiver of the right to appear and contest the allegations of the complaint and this notice, and to authorize the administrative law judge and the Commission, without further notice to the respondent, to find the facts to be as alleged in the complaint and this notice and to enter an initial determination and a final determination containing such findings, and may result in the issuance of an exclusion order or a cease and desist order or both directed against the respondent.

By order of the Commission.
Issued: June 3, 2015.

Lisa R. Barton,

Secretary to the Commission.

[FR Doc. 2015–13973 Filed 6–8–15; 8:45 am]

BILLING CODE 7020–02–P

INTERNATIONAL TRADE COMMISSION

[Investigation Nos. 701–TA–516–519 (Final)]

Certain Steel Nails From Korea, Malaysia, Oman, and Taiwan; Termination of Investigations

AGENCY: United States International Trade Commission.

ACTION: Notice.

SUMMARY: On May 20, 2015, the Department of Commerce published notice in the **Federal Register** of negative final determinations of countervailable subsidies in connection with the subject investigations concerning Korea (80 FR 28966), Malaysia (80 FR 28968), Oman (80 FR 28958), and Taiwan (80 FR 28964). Accordingly, the countervailing duty investigations concerning certain steel nails from Korea, Malaysia, Oman, and Taiwan (Investigation Nos. 701–TA–516–519 (Final)) are terminated.

DATES: *Effective Date:* May 20, 2015.

FOR FURTHER INFORMATION CONTACT: Fred Ruggles (202–205–3187), Office of Investigations, U.S. International Trade Commission, 500 E Street SW., Washington, DC 20436. Hearing-impaired individuals are advised that information on this matter can be obtained by contacting the Commission's TDD terminal on 202–205–1810. Persons with mobility impairments who will need special assistance in gaining access to the Commission should contact the Office of the Secretary at 202–205–2000. General information concerning the Commission may also be obtained by accessing its Internet server (*http://www.usitc.gov*). The public record for these investigations may be viewed on the Commission's electronic docket (EDIS) at *http://edis.usitc.gov.*

Authority: These investigations are being terminated under authority of title VII of the Tariff Act of 1930 and pursuant to section 207.40(a) of the Commission's Rules of Practice and Procedure (19 CFR 207.40(a)). This notice is published pursuant to section 201.10 of the Commission's rules (19 CFR 201.10).

By order of the Commission.
Issued: June 3, 2015.

Lisa R. Barton,

Secretary to the Commission.

[FR Doc. 2015–14026 Filed 6–8–15; 8:45 am]

BILLING CODE 7020–02–P

INTERNATIONAL TRADE COMMISSION

[Investigation Nos. 701–TA–534–538 and 731–TA–1274–1278 (Preliminary)]

Certain Corrosion-Resistant Steel Products From China, India, Italy, Korea, and Taiwan; Institution of Antidumping and Countervailing Duty Investigations and Scheduling of Preliminary Phase Investigations

AGENCY: United States International Trade Commission.

ACTION: Notice.

SUMMARY: The Commission hereby gives notice of the institution of investigations

and commencement of preliminary phase antidumping and countervailing duty investigation Nos. 701–TA–534–538 and 731–TA–1274–1278 (Preliminary) pursuant to the Tariff Act of 1930 (''the Act'') to determine whether there is a reasonable indication that an industry in the United States is materially injured or threatened with material injury, or the establishment of an industry in the United States is materially retarded, by reason of imports of certain corrosion-resistant steel products from China, India, Italy, Korea, and Taiwan, provided for in subheadings 7210.30.00, 7210.41.00, 7210.49.00, 7210.61.00, 7210.69.00, 7210.70.60, 7210.90.10, 7210.90.60, 7210.90.90, 7212.20.00, 7212.30.10, 7212.30.30, 7212.30.50, 7212.40.10, 7212.40.50, 7212.50.00, 7212.60.00, 7215.90.10, 7215.90.30, 7215.90.50, 7217.20.15, 7217.30.15, 7217.90.10, 7217.90.50, 7225.91.00, 7225.92.00, and 7226.99.01 of the Harmonized Tariff Schedule of the United States, that are alleged to be sold in the United States at less than fair value and alleged to be subsidized by the Governments of China, India, Italy, Korea, and Taiwan. Unless the Department of Commerce extends the time for initiation, the Commission must reach a preliminary determination in antidumping and countervailing duty investigations in 45 days, or in this case by July 20, 2015. The Commission's views must be transmitted to Commerce within five business days thereafter, or by July 27, 2015.

DATES: *Effective Date:* June 3, 2015.

FOR FURTHER INFORMATION CONTACT: Mary Messer (202–205–3193), Office of Investigations, U.S. International Trade Commission, 500 E Street SW., Washington, DC 20436. Hearing-impaired persons can obtain information on this matter by contacting the Commission's TDD terminal on 202–205–1810. Persons with mobility impairments who will need special assistance in gaining access to the Commission should contact the Office of the Secretary at 202–205–2000. General information concerning the Commission may also be obtained by accessing its Internet server (*http://www.usitc.gov*). The public record for this investigation may be viewed on the Commission's electronic docket (EDIS) at *http://edis.usitc.gov.*

SUPPLEMENTARY INFORMATION: *Background.*—These investigations are being instituted, pursuant to sections 703(a) and 733(a) of the Tariff Act of 1930 (19 U.S.C. 1671b(a) and 1673b(a)), in response to a petition filed on June 3, 2015, by United States Steel Corporation (Pittsburgh, Pennsylvania), Nucor Corporation (Charlotte, North Carolina), Steel Dynamics Inc. (Fort Wayne, Indiana), California Steel Industries (Fontana, California), ArcelorMittal USA LLC (Chicago, Illinois), and AK Steel Corporation (West Chester, Oregon).

For further information concerning the conduct of these investigations and rules of general application, consult the Commission's Rules of Practice and Procedure, part 201, subparts A and B (19 CFR part 201), and part 207, subparts A and B (19 CFR part 207).

Participation in the investigations and public service list.—Persons (other than petitioners) wishing to participate in the investigations as parties must file an entry of appearance with the Secretary to the Commission, as provided in sections 201.11 and 207.10 of the Commission's rules, not later than seven days after publication of this notice in the **Federal Register**. Industrial users and (if the merchandise under investigation is sold at the retail level) representative consumer organizations have the right to appear as parties in Commission antidumping duty and countervailing duty investigations. The Secretary will prepare a public service list containing the names and addresses of all persons, or their representatives, who are parties to these investigations upon the expiration of the period for filing entries of appearance.

Limited disclosure of business proprietary information (BPI) under an administrative protective order (APO) and BPI service list.—Pursuant to section 207.7(a) of the Commission's rules, the Secretary will make BPI gathered in these investigations available to authorized applicants representing interested parties (as defined in 19 U.S.C. 1677(9)) who are parties to the investigations under the APO issued in the investigations, provided that the application is made not later than seven days after the publication of this notice in the **Federal Register**. A separate service list will be maintained by the Secretary for those parties authorized to receive BPI under the APO.

Conference.—The Commission's Director of Investigations has scheduled a conference in connection with these investigations for 9:30 a.m. on June 24, 2015, at the U.S. International Trade Commission Building, 500 E Street SW., Washington, DC. Requests to appear at the conference should be emailed to *William.bishop@usitc.gov* and *Sharon.bellamy@usitc.gov* (DO NOT FILE ON EDIS) on or before June 22, 2015. Parties in support of the imposition of countervailing and antidumping duties in these investigations and parties in opposition to the imposition of such duties will each be collectively allocated one hour within which to make an oral presentation at the conference. A nonparty who has testimony that may aid the Commission's deliberations may request permission to present a short statement at the conference.

Written submissions.—As provided in sections 201.8 and 207.15 of the Commission's rules, any person may submit to the Commission on or before June 29, 2015, a written brief containing information and arguments pertinent to the subject matter of the investigations. Parties may file written testimony in connection with their presentation at the conference. If briefs or written testimony contain BPI, they must conform with the requirements of sections 201.6, 207.3, and 207.7 of the Commission's rules. Please consult the Commission's rules, as amended, 76 FR 61937 (Oct. 6, 2011) and the Commission's Handbook on Filing Procedures, 76 FR 62092 (Oct. 6, 2011), available on the Commission's Web site at *http://edis.usitc.gov.*

In accordance with sections 201.16(c) and 207.3 of the rules, each document filed by a party to the investigations must be served on all other parties to the investigations (as identified by either the public or BPI service list), and a certificate of service must be timely filed. The Secretary will not accept a document for filing without a certificate of service.

Authority: These investigations are being conducted under authority of title VII of the Tariff Act of 1930; this notice is published pursuant to section 207.12 of the Commission's rules.

By order of the Commission.
Issued: June 3, 2015.

Lisa R. Barton,

Secretary to the Commission.

[FR Doc. 2015–14028 Filed 6–8–15; 8:45 am]

BILLING CODE 7020–02–P

DEPARTMENT OF JUSTICE

[OMB Number 1121–0065]

Agency Information Collection Activities; Proposed eCollection eComments Requested; Proposed Collection: Extension of Currently Approved Collection; Survey: National Corrections Reporting Program

AGENCY: Bureau of Justice Statistics, Department of Justice.

ACTION: 60-day notice.

SUMMARY: The Department of Justice (DOJ), Office of Justice Programs, Bureau of Justice Statistics, will be submitting the following information collection request to the Office of Management and Budget (OMB) for review and approval in accordance with the Paperwork Reduction Act of 1995.

DATES: Comments are encouraged and will be accepted for 60 days until August 10, 2015.

FOR FURTHER INFORMATION CONTACT: If you have additional comments especially on the estimated public burden or associated response time, suggestions, or need a copy of the proposed information collection instrument with instructions or additional information, please contact Elizabeth Ann Carson, Statistician, Bureau of Justice Statistics, 810 Seventh Street NW., Washington, DC 20531 (email: *elizabeth.carson@usdoj.gov;* telephone: 202/616.3496).

SUPPLEMENTARY INFORMATION: Written comments and suggestions from the public and affected agencies concerning the proposed collection of information are encouraged. Your comments should address one or more of the following four points:

- Evaluate whether the proposed collection of information is necessary for the proper performance of the functions of the Bureau of Justice Statistics, including whether the information will have practical utility;
- Evaluate the accuracy of the agency's estimate of the burden of the proposed collection of information, including the validity of the methodology and assumptions used;
- Evaluate whether and if so how the quality, utility, and clarity of the information to be collected can be enhanced; and
- Minimize the burden of the collection of information on those who are to respond, including through the use of appropriate automated, electronic, mechanical, or other technological collection techniques or other forms of information technology, *e.g.,* permitting electronic submission of responses.

Overview of this information collection:

(1) *Type of Information Collection:* Extension of a Currently Approved Collection.

(2) *The Title of the Form/Collection:* National Corrections Reporting Program. The collection includes the forms: Prisoner Admission Report, Prisoner Release Report, Prisoners in Custody at Yearend Report, Post-Custody Community Supervision Entry Report, Post-Custody Community Supervision Exit Report.

(3) *The agency form number, if any, and the applicable component of the Department sponsoring the collection:* Form number(s): NCRP–1A, NCRP–1B, NCRP–1D, NCRP–1E, NCRP–1F. The applicable component within the Department of Justice is the Bureau of Justice Statistics (Corrections Unit), in the Office of Justice Programs.

(4) *Affected public who will be asked or required to respond, as well as a brief abstract:* Primary: State departments of corrections. Others: State government and Federal government. The National Corrections Reporting Program (NCRP) is the only national data collection furnishing annual individual-level information for state prisoners at five points in the incarceration process: prison admission; prison release; annual yearend prison custody census; entry to post-custody community corrections supervision; and exits from post-custody community corrections supervision. BJS, the U.S. Congress, researchers, and criminal justice practitioners use these data to describe annual movements of adult offenders through state correctional systems, as well as to examine long term trends in time served in prison, demographic and offense characteristics of inmates, sentencing practices in the states that submit data, transitions between incarceration and community corrections, and recidivism. Providers of the data are personnel in the states' Departments of Corrections and Parole, and all data are submitted on a voluntary basis. The NCRP collects the following administrative data on each inmate in participating states' custody:

- County of sentencing
- State and federal inmate identification numbers
- Dates of: birth; prison admission; prison release; projected prison release; mandatory prison release; eligibility hearing for post-custody community corrections supervision; post-custody community corrections supervision entry, post-custody community corrections supervision exit
- First and last names
- Demographic information: sex; race; Hispanic origin; education level; prior military service; date and type of last discharge from military
- Offense type and number of counts per inmate for a maximum of three convicted offenses per inmate
- Prior time spent in prison and jail, and prior felony convictions
- Total sentence length imposed
- Additional offenses and sentence time imposed since prison admission
- Type of facility where inmate is serving sentence (for yearend custody census records only, the name of the facility is also requested)
- Type of prison admission
- Type of prison release
- Whether inmate was AWOL/escape during incarceration
- Agency assuming custody of inmate released from prison (post-custody community supervision records only)
- Supervision status prior to discharge from post-custody community supervision and type of discharge
- Location of post-custody community supervision exit or post-custody community supervision office (post-custody community supervision records only)

In addition, BJS is requesting OMB clearance to add the following items to the NCRP collection, all of which are likely available from the same databases as existing data elements, and should therefore pose minimal additional burden to the respondents, while greatly enhancing BJS' ability to better characterize the corrections systems and populations it serves:

- 9-digit social security number
- Address of last residence prior to incarceration
- Prison security level at which the inmate is held

Finally, BJS is requesting OMB clearance to request individual-level data for the entry and exit of persons onto probation programs for those 36 states where the probation reporting office is centralized and located in the same department as the respondent for the post-custody community supervision NCRP records. This request will be phased in slowly, with 5 states forming an initial pilot test of probation data collection in report year 2017, followed by the other states in later years. The following data elements will be requested:

- County of sentencing
- State and federal inmate identification numbers
- Dates of: sentencing; entry into probation program, exit from probation program
- First and last names
- Demographic information: sex; race; Hispanic origin; education level; prior military service; date and type of last discharge from military
- Offense type and number of counts per inmate for a maximum of three convicted offenses per inmate
- Total sentence length imposed
- Whether the sentence is to be split between community corrections and short-term incarceration
- Type of probation entry

- Type of probation exit
- Supervision status prior to probation exit
- Location of probation community supervision exit or probation office

BJS uses the information gathered in NCRP in published reports and statistics. The reports will be made available to the U.S. Congress, Executive Office of the President, practitioners, researchers, students, the media, others interested in criminal justice statistics, and the general public via the BJS Web site.

(5) *An estimate of the total number of respondents and the amount of time estimated for an average respondent to respond:* BJS anticipates 57 respondents to NCRP for report year 2015: 50 state respondents and seven separate state parole boards. Each respondent currently submitting NCRP prison and post-custody community supervision data will require an estimated 27 hours of time to supply the information for their annual caseload and an additional 3 hours documenting or explaining the data for a total of 1,317 hours. For the one state which has not submitted prison data since 2004, and the 19 states that do not currently submit post-custody community supervision data, the total first year's burden estimate is 510 hours, which includes the time required for developing or modifying computer programs to extract the data, performing and checking the extracted data, and submitting it electronically to BJS' data collection agency via SFTP. The total burden for all 57 NCRP data providers, including the pilot probation data, is 1,827 hours for report year 2015. In report year 2017, 5 states will be asked to pilot test the provision of probation data during report year 2015. BJS estimates that this new extraction of data will take 24 hours per state, or 120 hours total. The total burden estimate for report year 2017 including the collection of probation data from 5 states is 1,628 hours. All states submit data via a secure file transfer protocol (SFTP) electronic upload.

(6) *An estimate of the total public burden (in hours) associated with the collection:* There are an estimated 1,827 total burden hours associated with this collection for report year 2015.

If additional information is required contact: Jerri Murray, Department Clearance Officer, United States Department of Justice, Justice Management Division, Policy and Planning Staff, Two Constitution Square, 145 N Street NE., 3E.405B, Washington, DC 20530.

Dated: June 3, 2015.

Jerri Murray,

Department Clearance Officer for PRA, U.S. Department of Justice.

[FR Doc. 2015–13968 Filed 6–8–15; 8:45 am]

BILLING CODE 4410–18–P

DEPARTMENT OF JUSTICE

Amended Notice of Lodging of Proposed First Amendment To Consent Decree Under the Clean Water Act (''CWA'')

On May 19, 2015, the Department of Justice lodged a proposed First Amendment to Consent Decree with the United States District Court for the District of Columbia, in the lawsuit entitled *United States of America* v. *District of Columbia Water and Sewer Authority, et al., and the District of Columbia,* Civil Action No. 1:00–cv–00183 (TFH).

The proposed First Amendment to Consent Decree, if approved, will amend and supersede the 2005 Clean Water Act Consent Decree in the same action. Under the 2005 Consent Decree, DC Water was required to implement its Long Term Control Plan (LTCP) which primarily consisted of the construction of a system of pumps and three underground storage tunnels to store excess flows pending treatment. The proposed Amendment provides for the incorporation of Green Infrastructure (GI) in the Potomac River and Rock Creek sewersheds, reduction of the size of the tunnel in the Potomac River, and construction of facilities at the Blue Plains wastewater treatment plant including a Tunnel Dewatering Pumping Station and an Enhanced Clarification Facility. Construction of the Anacostia tunnel has begun according to schedule and will not be affected by this proposed Amendment. The final compliance date of 2025 imposed in the 2005 Consent Decree would be extended to 2030.

On Tuesday, May 26, 2015, the United States published a notice in the **Federal Register** (80 FR 30094), opening a 30-day period for public comment on the proposed First Amendment to Consent Decree. By this notice, the United States is extending that public comment period for an additional 30-days, for a total of 60-days from the original May 26, 2015 publication. Comments should be addressed to the Assistant Attorney General, Environment and Natural Resources Division, and should refer to *United States of America* v. *District of Columbia Water and Sewer Authority, et al., and the District of Columbia,* Civil Action No. 1:00-cv-00183 (TFH), D.J. Ref. No. 90–5–1–1–07137. All comments must be submitted no later than sixty (60) days after May 26, 2015. Comments may be submitted either by email or by mail:

To submit comments:	*Send them to:*
By e-mail	*pubcomment-ees.enrd@usdoj.gov.*
By mail	Assistant Attorney General, U.S. DOJ–ENRD, P.O. Box 7611, Washington, D.C. 20044–7611.

During the public comment period, the proposed First Amendment to Consent Decree may be examined and downloaded at this Justice Department Web site: *http://www.justice.gov/enrd/consent-decrees.* We will provide a paper copy of the proposed First Amendment to Consent Decree upon written request and payment of reproduction costs. Please mail your request and payment to: Consent Decree Library, U.S. DOJ–ENRD, P.O. Box 7611, Washington, DC 20044–7611.

Please enclose a check or money order for $180.00 (25 cents per page reproduction cost) payable to the United States Treasury. For a paper copy without the exhibits and signature pages, the cost is $13.00.

Robert Brook,

Assistant Section Chief, Environmental Enforcement Section, Environment and Natural Resources Division.

[FR Doc. 2015–14074 Filed 6–8–15; 8:45 am]

BILLING CODE 4410–CW–P

DEPARTMENT OF JUSTICE

Notice of Extension of Public Comment Period for Proposed Consent Decree Under the Clean Air Act

On May 19, 2015, the Department of Justice lodged a proposed Consent Decree with the United States District Court for the Eastern District of Michigan in the lawsuit entitled *United States and Michigan Department of Environmental Quality* v. *AK Steel Corporation,* Civil Action No. 15–11804.

The United States filed this lawsuit under the Clean Air Act (CAA), naming AK Steel Corporation as the defendant. The complaint seeks injunctive relief and civil penalties for violations of the environmental regulations that govern iron and steel mills and the emission of particulate matter from certain sources at defendant's iron and steel mill in Dearborn, Wayne County, Michigan. The Michigan Department of

Environmental Quality (MDEQ) joined the complaint as a co-plaintiff asserting the same claims under equivalent state laws and regulations. Under the proposed consent decree, AK Steel agrees to implement procedures to improve future compliance with the CAA and State regulations, and pay a total of $1,353,126 in civil penalties, to be divided equally between the United States and MDEQ. Under the proposed consent decree, AK Steel also agrees to fund the installation of air filtration systems at nearby public schools. In return, the United States and MDEQ agree not to sue the defendant under section 113 of the CAA related to its past violations.

In a **Federal Register** Notice published on May 26, 2015, the Department of Justice announced its intention to receive comments relating to the proposed Consent Decree for a period of thirty (30) days from the date of that publication. 80 FR 30,094 (May 26, 2015). In response to a request, the Department of Justice is extending that public comment period for 15 days until July 10, 2015. Comments should be addressed to the Assistant Attorney General, Environment and Natural Resources Division, and should refer to *United States and MDEQ* v. *AK Steel Corp.,* D.J. Ref. No. 90–5–2–1–10702. All comments must be submitted by no later than July 10, 2015. Comments may be submitted either by email or by mail:

To submit comments:	*Send them to:*
By email	*pubcomment-ees.enrd@usdoj.gov.*
By mail	Assistant Attorney General, U.S. DOJ—ENRD, P.O. Box 7611, Washington, DC 20044–7611.

During the public comment period, the proposed Consent Decree may be examined and downloaded at this Justice Department Web site: *http://www.justice.gov/enrd/consent-decrees.* We will provide a paper copy of the proposed Consent Decree upon written request and payment of reproduction costs. Please mail your request and payment to: Consent Decree Library, U.S. DOJ—ENRD, P.O. Box 7611, Washington, DC 20044–7611.

Please enclose a check or money order for $14.00 (25 cents per page reproduction cost) payable to the United States Treasury.

Randall M. Stone,

Acting Assistant Section Chief, Environmental Enforcement Section, Environment and Natural Resources Division.

[FR Doc. 2015–13976 Filed 6–8–15; 8:45 am]

BILLING CODE 4410–15–P

DEPARTMENT OF JUSTICE

[OMB Number 1121–0317]

Agency Information Collection Activities; Proposed eCollection eComments Requested; Reinstatement, With Change, of a Previously Approved Collection for Which Approval has Expired; 2016/2018 Identity Theft Supplement (ITS)

AGENCY: Bureau of Justice Statistics, Department of Justice.

ACTION: 60-day notice.

SUMMARY: The Department of Justice (DOJ), Office of Justice Programs, Bureau of Justice Statistics, will be submitting the following information collection request to the Office of Management and Budget (OMB) for review and approval in accordance with the Paperwork Reduction Act of 1995.

DATES: Comments are encouraged and will be accepted for 60 days until August 10, 2015.

FOR FURTHER INFORMATION CONTACT: If you have additional comments especially on the estimated public burden or associated response time, suggestions, or need a copy of the proposed information collection instrument with instructions or additional information, please contact Erika Harrell, Statistician, Bureau of Justice Statistics, 810 Seventh Street NW., Washington, DC 20531 (email: *Erika.Harrell@usdoj.gov;* telephone: 202–307–0758).

SUPPLEMENTARY INFORMATION: Written comments and suggestions from the public and affected agencies concerning the proposed collection of information are encouraged. Your comments should address one or more of the following four points:

- Evaluate whether the proposed collection of information is necessary for the proper performance of the functions of the Bureau of Justice Statistics, including whether the information will have practical utility;
- Evaluate the accuracy of the agency's estimate of the burden of the proposed collection of information, including the validity of the methodology and assumptions used;
- Evaluate whether and if so how the quality, utility, and clarity of the information to be collected can be enhanced; and
- Minimize the burden of the collection of information on those who are to respond, including through the use of appropriate automated, electronic, mechanical, or other technological collection techniques or other forms of information technology, *e.g.,* permitting electronic submission of responses.

Overview of this information collection

(1) *Type of Information Collection:* Reinstatement of the Identity Theft Supplement, with changes, a previously approved collection for which approval has expired.

(2) *The Title of the Form/Collection:* 2016/2018 Identity Theft Supplement

(3) *The agency form number, if any, and the applicable component of the Department sponsoring the collection:* The form number for the questionnaire is ITS–1. The applicable component within the Department of Justice is the Bureau of Justice Statistics, in the Office of Justice Programs.

(4) *Affected public who will be asked or required to respond, as well as a brief abstract:* Respondents will be persons 16 years or older living in households located throughout the United States sampled for the National Crime Victimization Survey (NCVS). The ITS will be conducted as a supplement to the NCVS in all sample households for a six (6) month period. The ITS is primarily an effort to measure the prevalence of identity theft among persons, the characteristics of identity theft victims, and patterns of reporting to the police, credit bureaus, and other authorities. The ITS was also designed to collect important characteristics of identity theft such as how the victim's personal information was obtained; the physical, emotional and financial impact on victims; offender information; and the measures people take to avoid or minimize their risk of becoming an identity theft victim. BJS plans to publish this information in reports and reference it when responding to queries from the U.S. Congress, Executive Office of the President, the U.S. Supreme Court, state officials, international organizations, researchers, students, the media, and others interested in criminal justices statistics.

(5) *An estimate of the total number of respondents and the amount of time estimated for an average respondent to respond:* An estimate of the total number of respondents is 113,000. About 93% of respondents (101,090) will have no identity theft and will

complete the short interview with an average burden of five minutes. Among the 7% of respondents (7,910) who experienced at least one incident of identity theft, the time to ask the detailed questions regarding the aspects of the most recent incident of identity theft is estimated to take an average of 14 minutes. Respondents will be asked to respond to this survey only once during the six month period. The burden estimate is based on data from prior administrations of the ITS.

(6) *An estimate of the total public burden (in hours) associated with the collection:* There is an estimated 10,227 total burden hours associated with this collection.

If additional information is required contact: Jerri Murray, Department Clearance Officer, United States Department of Justice, Justice Management Division, Policy and Planning Staff, Two Constitution Square, 145 N Street NE., 3E.405B, Washington, DC 20530.

Dated: June 3, 2015.

Jerri Murray,

Department Clearance Officer for PRA, U.S. Department of Justice.

[FR Doc. 2015–13978 Filed 6–8–15; 8:45 am]

BILLING CODE 4410–18–P

DEPARTMENT OF JUSTICE

[OMB Number 1110–NEW]

Agency Information Collection Activities; Proposed eCollection eComments Requested; Approval for New Collection FBI National Academy: United States Holocaust Memorial's Law Enforcement and Society Questionnaire

AGENCY: Federal Bureau of Investigation, Department of Justice.

ACTION: 30-day Notice.

SUMMARY: The Department of Justice (DOJ), Federal Bureau of Investigation (FBI), Training Division's Curriculum Management Section (CMS) will submit the following information collection request to the Office of Management and Budget (OMB) for review and approval in accordance with the Paperwork Reduction Act of 1995. This proposed information collection was previously published in the **Federal Register** 80 FR 17785, April 2, 2015, allowing for a 60 day comment period.

DATES: Comments are encouraged and will be accepted for an additional 30 days until July 9, 2015.

FOR FURTHER INFORMATION CONTACT: If you have additional comments especially on the estimated public burden or associated response time, suggestions, or need a copy of the proposed information collection instrument with instructions or additional information, please contact Keith Shirley, Unit Chief, Evaluation and Assessment Unit, Training Division, FBI Academy, Federal Bureau of Investigation, Quantico, Virginia 22135, (phone: 703–632–3025).

SUPPLEMENTARY INFORMATION: Written comments and suggestions from the public and affected agencies concerning the proposed collection of information are encouraged. Your comments should address one or more of the following four points:

- Evaluate whether the proposed collection of information is necessary for the proper performance of the functions of the Federal Bureau of Investigation, including whether the information will have practical utility;
- Evaluate the accuracy of the agency's estimate of the burden of the proposed collection of information, including the validity of the methodology and assumptions used;
- Evaluate whether and if so how the quality, utility, and clarity of the information to be collected can be enhanced; and
- Minimize the burden of the collection of information on those who are to respond, including through the use of appropriate automated, electronic, mechanical, or other technological collection techniques or other forms of information technology, *e.g.,* permitting electronic submission of responses.

Overview of this information collection:

(1) *Type of Information Collection:* Approval of a New Collection.

(2) *The Title of the Form/Collection:* FBI National Academy: United States Holocaust Museum's Law Enforcement and Society Questionnaire.

(3) *The agency form number, if any, and the applicable component of the Department sponsoring the collection:* None given

(4) *Affected public who will be asked or required to respond, as well as a brief abstract:*

Primary: FBI National Academy students that represent state and local police and sheriffs' departments, military police organizations, and federal law enforcement agencies from the United States and over 150 foreign nations.

Brief Abstract: This collection is requested by FBI National Academy on behalf of the United States Holocaust Memorial Museum (USHMM). As part of the FBI National Academy's 10-week training, law enforcement professionals attend a guided tour at the United States Holocaust Memorial Museum lead by the Law Enforcement and Society program (LEAS). The purpose of the tour is to allow law enforcement officers to examine the role of the law enforcement profession and how it played in the Holocaust.

The purpose of the proposed data collection is to gather feedback from FBI National Academy students about their experience with LEAS during the tour. The results will help determine if the LEAS program is meeting its goals and objectives to better serve future law enforcement professionals participating in the FBI National Academy. In addition, the proposed data collection will be used to ensure the presentations and educational material is current and applicable.

(5) *An estimate of the total number of respondents and the amount of time estimated for an average respondent to respond:* Approximately 1,000 FBI National Academy students per year will receive the questionnaire, and the average time to complete will be about 15 minutes. (The number of students is based on appropriate number of students from fiscal years 2012–2013). Though we would like a 100% response rate, we anticipate a 75% response rate of those surveyed (or 750); with 25% of the students not responding to the questionnaire.

(6) *An estimate of the total public burden (in hours) associated with the collection:* Given that the approximately 75% of those surveyed (or 750) will respond, the total public burden for completing the questionnaire is 187 hours.

If additional information is required contact: Jerri Murray, Department Clearance Officer, United States Department of Justice, Justice Management Division, Policy and Planning Staff, Two Constitution Square, 145 N Street NE., 3E.405B, Washington, DC 20530.

Dated: June 3, 2015.

Jerri Murray,

Department Clearance Officer for PRA, U.S. Department of Justice.

[FR Doc. 2015–13957 Filed 6–8–15; 8:45 am]

BILLING CODE 4410–02–P

DEPARTMENT OF LABOR

Occupational Safety and Health Administration

[Docket No. OSHA–2015–0005]

Federal Advisory Council on Occupational Safety and Health (FACOSH)

AGENCY: Occupational Safety and Health Administration (OSHA), Labor.

ACTION: Announcement of FACOSH meeting and member appointments.

SUMMARY: The Federal Advisory Council on Occupational Safety and Health (FACOSH) will meet Thursday, July 16, 2015, in Washington, DC. This **Federal Register** notice also announces the appointment of six individuals to serve on FACOSH.

DATES: *FACOSH meeting:* FACOSH will meet from 1 to 4:30 p.m., Thursday, July 16, 2015.

Submission of comments, requests to speak, speaker presentations, and requests for special accommodations: You must submit (postmark, send, transmit, deliver) comments, requests to speak at the FACOSH meeting, speaker presentations, and requests for special accommodations to attend the meeting by Thursday, July 2, 2015.

ADDRESSES:

FACOSH meeting: FACOSH will meet in Rooms N–4437 A–D, U.S. Department of Labor, 200 Constitution Avenue NW., Washington, DC 20210.

Submission of comments, requests to speak, and speaker presentations: You may submit comments, requests to speak at the FACOSH meeting, and speaker presentations using one of the following methods:

Electronically: You may submit materials, including attachments, electronically at *http://www.regulations.gov,* the Federal eRulemaking Portal. Follow the online instructions for making submissions;

Facsimile: If your submission, including attachments, does not exceed 10 pages, you may fax it to the OSHA Docket Office at (202) 693–1648; or

Mail, express delivery, hand delivery, or messenger/courier service: You may submit materials to the OSHA Docket Office, Docket No. OSHA–2015–0005, Room N–2625, U.S. Department of Labor, 200 Constitution Avenue NW., Washington, DC 20210; telephone (202) 693–2350 (OSHA TTY (877) 889–5627). Deliveries (hand, express mail, messenger/courier service) are accepted during the Department's and the OSHA Docket Office's normal business hours, 8:15 a.m.–4:45 p.m., weekdays.

Requests for special accommodations to attend the FACOSH meeting: You may submit requests for special accommodations by hard copy, telephone, or email to Ms. Gretta Jameson, OSHA Office of Communications, Room N–3647, U.S. Department of Labor, 200 Constitution Avenue NW., Washington, DC 20210; telephone (202) 693–1999; email *jameson.gretta@dol.gov*.

Instructions: All submissions must include the agency name and docket number for this **Federal Register** notice. Because of security-related procedures, submissions by regular mail may result in a significant delay in their receipt. Please contact the OSHA Docket Office for information about security procedures for making submissions by hand delivery, express delivery, and messenger/courier service. For additional information on submitting comments, requests to speak, and speaker presentations, see the **SUPPLEMENTARY INFORMATION** section below.

OSHA will post comments, requests to speak, and speaker presentations, including any personal information provided, without change at *http://www.regulations.gov*. Therefore, OSHA cautions individuals about submitting certain personal information, such as Social Security numbers and birthdates.

FOR FURTHER INFORMATION CONTACT:

For press inquiries: Mr. Frank Meilinger, Director, OSHA Office of Communications, Room N–3647, U.S. Department of Labor, 200 Constitution Avenue NW., Washington, DC 20210; telephone (202) 693–1999; email *meilinger.francis2@dol.gov*.

For general information: Mr. Francis Yebesi, Director, OSHA Office of Federal Agency Programs, Room N–3622, U.S. Department of Labor, 200 Constitution Avenue NW., Washington, DC 20210; telephone (202) 693–2122; email *ofap@dol.gov*.

SUPPLEMENTARY INFORMATION: FACOSH will meet July 16, 2015, in Washington, DC. Some FACOSH members may attend the meeting electronically. The meeting is open to the public. The tentative agenda for the FACOSH meeting includes:

- Updates from FACOSH subcommittees;
- OSHA's Voluntary Protection Programs;
- Protecting federal workers from retaliation; and
- Presidential POWER Initiative.

FACOSH is authorized by 5 U.S.C. 7902; section 19 of the Occupational Safety and Health Act of 1970 (OSH Act) (29 U.S.C. 668); and Executive Order 11612, as amended, to advise the Secretary of Labor (Secretary) on all matters relating to the occupational safety and health of federal employees. This includes providing advice on how to reduce and keep to a minimum the number of injuries and illnesses in the federal workforce, and how to encourage each federal Executive Branch department and agency to establish and maintain effective occupational safety and health programs.

OSHA transcribes and prepares detailed minutes of FACOSH meetings. The Agency puts meeting transcripts and minutes plus other materials presented at the FACOSH meeting in the public record of the meeting, which is posted at *http://www.regulations.gov*.

Announcement of FACOSH Appointments

FACOSH is comprised of 16 members; eight representing federal agency management (management members) and eight from labor organizations representing federal employees (labor members). FACOSH members generally serve staggered three-year terms. The Secretary has appointed the following individuals to serve on FACOSH:

Labor members:

- Gregory Junemann, International Federation of Professional and Technical Engineers; and
- Milagro Rodríguez, American Federation of Government Employees.

Management members:

- Catherine Emerson, U.S. Department of Homeland Security;
- Gary Helmer, National Transportation Safety Board;
- Richard Williams, National Aeronautics and Space Administration; and
- Patricia Worthington, U.S. Department of Energy.

Public Participation, Submissions, and Access to Public Record

FACOSH meetings: FACOSH meetings are open to the public. Individuals attending meetings at the U.S. Department of Labor must enter the building at the Visitors' Entrance, 3rd and C Streets NW., and pass through building security. Attendees must have valid government-issued photo identification to enter. For additional information about building security measures, and requests for special accommodations for attending the FACOSH meeting, please contact Ms. Jameson (see **ADDRESSES** section).

Submission of requests to speak and speaker presentations. You may submit a request to speak to FACOSH by one

of the methods listed in the **ADDRESSES** section. Your request must state:

- The amount of time you request to speak;
- The interest you represent (*e.g.,* organization name), if any; and,
- A brief outline of your presentation.

PowerPoint speaker presentations and other electronic materials must be compatible with Microsoft Office 2010 formats. The FACOSH chair may grant requests to address FACOSH at his discretion, and as time and circumstances permit.

Submission of written comments. You also may submit written comments, including data and other information, using any of the methods listed in the **ADDRESSES** section. Your submissions, including attachments and other materials, must identify the agency name and the OSHA docket number for this **Federal Register** notice. You may supplement electronic submissions by uploading documents electronically. If you wish to submit hard copies of supplementary documents instead, you must submit them to the OSHA Docket Office following the instructions in the **ADDRESSES** section. The additional materials must clearly identify your electronic submission by name, date, and docket number. OSHA will provide copies of your submissions to FACOSH members.

Because of security-related procedures, submissions by regular mail may cause a significant delay in their receipt. For information about security procedures concerning submissions by hand, express delivery, and messenger/courier service, please contact the OSHA Docket Office (see **ADDRESSES** section).

Access to submissions and public record. OSHA places comments, requests to speak, speaker presentations, meeting transcripts and minutes, and other documents presented at the FACOSH meeting in the public record without change. Those documents also may be available online at *http://www.regulations.gov*. Therefore, OSHA cautions individuals about submitting certain personal information, such as Social Security numbers and birthdates.

To read or download documents in the public record, go to Docket No. OSHA–2015–0005 at *http://www.regulations.gov*. Although all meeting documents are listed in the index of that Web page, some documents (*e.g.,* copyrighted materials) are not publicly available to read or download there. All meeting documents, including copyrighted materials, are available at the OSHA Docket Office. Please contact the OSHA Docket Office for additional information about access to documents in the docket that are not publicly available online.

Information about using *http://www.regualtions.gov* to make submissions and access the record of FACOSH meetings is available at that Web page. Please contact the OSHA Docket Office for assistance with making submissions and obtaining documents in the FACOSH record, and for information about materials that not available on *http://www.regulations.gov*.

Electronic copies of this **Federal Register** notice are available at *http://www.regulations.gov*. This notice, as well as news releases and other relevant information about FACOSH, also is available at OSHA's Web page at *http://www.osha.gov/*.

Authority and Signature

David Michaels, Ph.D., MPH, Assistant Secretary of Labor for Occupational Safety and Health, directed the preparation of this notice pursuant to 5 U.S.C. 7902; 5 U.S.C. App. 2; 29 U.S.C. 668; Executive Order 12196 (45 CFR 12629 (2/27/1980)), as amended; 41 CFR part 102–3; and Secretary of Labor's Order No. 1–2012 (77 FR 3912 (1/25/2012)).

Signed at Washington, DC, on May 29, 2015.

David Michaels,

Assistant Secretary of Labor for Occupational Safety and Health.

[FR Doc. 2015–14001 Filed 6–8–15; 8:45 am]

BILLING CODE 4510–26–P

LEGAL SERVICES CORPORATION

Sunshine Act Meeting

DATE AND TIME: The Legal Services Corporation's Finance Committee will meet telephonically on June 15, 2015. The meeting will commence at 3:00 p.m., EDT, and will continue until the conclusion of the Committee's agenda.

PLACE: John N. Erlenborn Conference Room, Legal Services Corporation Headquarters, 3333 K Street NW., Washington DC 20007.

Public Observation: Members of the public who are unable to attend in person but wish to listen to the public proceedings may do so by following the telephone call-in directions provided below.

Call-In Directions for Open Sessions:

- Call toll-free number: 1–866–451–4981;
- When prompted, enter the following numeric pass code: 5907707348
- When connected to the call, please immediately ''MUTE'' your telephone.

Members of the public are asked to keep their telephones muted to eliminate background noises. To avoid disrupting the meeting, please refrain from placing the call on hold if doing so will trigger recorded music or other sound. From time to time, the Chair may solicit comments from the public.

STATUS: Open.

MATTERS TO BE CONSIDERED:

1. Approval of agenda
2. Approval of minutes of the Committee's meeting of April 13, 2015
3. Public comment regarding LSC's fiscal year 2017 budget request
   - Presentation by a representative of the American Bar Association's Standing Committee on Legal Aid and Indigent Defendants
   - Presentation by a representative of National Legal Aid and Defender Association
   - Other Interested Parties
4. Public comment
5. Consider and act on other business
6. Consider and act on adjournment of meeting

CONTACT PERSON FOR INFORMATION: Katherine Ward, Executive Assistant to the Vice President & General Counsel, at (202) 295–1500. Questions may be sent by electronic mail to *FR_NOTICE_QUESTIONS@lsc.gov.*

Accessibility: LSC complies with the Americans with Disabilities Act and Section 504 of the 1973 Rehabilitation Act. Upon request, meeting notices and materials will be made available in alternative formats to accommodate individuals with disabilities. Individuals needing other accommodations due to disability in order to attend the meeting in person or telephonically should contact Katherine Ward, at (202) 295–1500 or *FR_NOTICE_QUESTIONS@lsc.gov,* at least 2 business days in advance of the meeting.

If a request is made without advance notice, LSC will make every effort to accommodate the request but cannot guarantee that all requests can be fulfilled.

Dated: June 4, 2015.

Katherine Ward,

Executive Assistant to the Vice President for Legal Affairs and General Counsel.

[FR Doc. 2015–14130 Filed 6–5–15; 11:15 am]

BILLING CODE 7050–01–P

LIBRARY OF CONGRESS

United States Copyright Office

[Docket No. 2015–3]

Mass Digitization Pilot Program; Request for Comments

AGENCY: U.S. Copyright Office, Library of Congress.

ACTION: Notice of inquiry.

SUMMARY: The U.S. Copyright Office is developing a limited pilot program and corresponding draft legislation that would establish a legal framework known as extended collective licensing for certain mass digitization activities that are currently beyond the reach of the Copyright Act. This request provides the opportunity for interested parties to submit specific recommendations regarding the operational aspects of the pilot program, within the parameters and legal framework described in the Office's *Orphan Works and Mass Digitization* report.

DATES: Comments must be received no later than 5:00 p.m. EDT on August 10, 2015.

ADDRESSES: All comments should be submitted electronically. To submit comments, please visit *http://copyright.gov/policy/massdigitization.* The Web site interface requires commenting parties to complete a form specifying name and organization, as applicable, and to upload comments as an attachment via a browser button. To meet accessibility standards, commenting parties must upload comments in a single file not to exceed six megabytes (MB) in one of the following formats: A Portable Document File (PDF) format that contains searchable, accessible text (not an image); Microsoft Word; WordPerfect; Rich Text Format (RTF); or ASCII text file (not a scanned document). The form and face of the comments must include both the name of the submitter and organization. The Office will post the comments publicly on the Office's Web site exactly as they are received, along with names and organizations. If electronic submission of comments is not feasible, please contact the Office at 202–707–1027 for special instructions.

FOR FURTHER INFORMATION CONTACT: Kevin Amer, Senior Counsel for Policy and International Affairs, by telephone at 202–707–1027 or by email at *kamer@loc.gov.*

SUPPLEMENTARY INFORMATION:

I. Background

The U.S. Copyright Office has completed a multi-year study on the issues of orphan works and mass digitization, respectively, and has published a report detailing its findings and recommendations.[1] In the report, the Office proposes separate legislative solutions for each issue. With respect to orphan works, the Office has proposed, with certain conditions, a limitation on liability for good faith users, improving upon its 2006 Orphan Works Report as well as the Shawn Bentley Orphan Works Act passed by the Senate in 2008.[2] With respect to mass digitization, the Office has concluded that the addition of extended collective licensing (ECL) in U.S. law would help to facilitate the work of those who wish to digitize and provide full access to certain collections of books, photographs, or other materials for nonprofit educational or research purposes. An ECL framework can facilitate lawful uses that are not otherwise possible (*e.g.,* because they are beyond the reach of case-by-case licensing or the application of fair use or both). The Office's full analysis can be found at *http://copyright.gov/orphan/.*

If Congress were to establish a limited and voluntary pilot program at this time, it would help the United States copyright community to garner experience with the kind of ECL experience that is either in place or being discussed in other countries. The pilot program would permit users to obtain licenses under specified conditions. Under the proposed framework, a collective management organization (CMO) representing copyright owners in a particular category of works would be permitted to seek authorization from the Register of Copyrights to issue licenses on behalf of both members and non-members of the CMO for certain mass digitization activities. To qualify for licensing authority, a CMO would be required to submit an application to the Office providing evidence of its representativeness in the relevant field, the consent of its membership to the ECL proposal, and its adherence to sufficient standards of transparency, accountability, and good governance. Once authorized, a CMO would be entitled to negotiate royalty rates and terms with users seeking to digitally reproduce and provide online access to a collection or body of copyrighted works for the benefit of the public, a community, or other specified users. Because the pilot is a limited project, such uses at this early juncture could be made only for nonprofit educational and research purposes and without any purpose of direct or indirect commercial advantage. The CMO would be required to collect and distribute royalties to rightsholders within a prescribed period and to conduct diligent searches for non-members for whom it had collected payments. Copyright owners would have the right to limit the grant of licenses with respect to their works or to opt out of the system altogether.

To assist it in developing specific legislation within these general parameters, the Office invites public comment on the topics below regarding the practical operation of such a system. The Office will then seek to facilitate further discussion through stakeholder meetings and, if necessary, additional requests for written comment. Based on this input, the Office will draft a formal legislative proposal for Congress's consideration.

II. Request for Comment

1. Examples of Projects. Comments are invited regarding examples of large digitization projects that may be appropriate for licensing under the Office's proposed ECL framework. The Office is particularly interested in the views of prospective users who may be interested in digitizing and offering access to a specific collection or body of works. The Office believes that information about the types of mass digitization projects that users have the desire and capacity to undertake will provide a useful starting point for stakeholder dialogue on various elements of the ECL pilot. Other interested members of the public, however, are also invited to submit their views. Specifically, commenters should address the following issues:

a. Qualifying Collections. The Office has recommended that ECL be available for three categories of published copyrighted works: (1) Literary works; (2) pictorial or graphic works published as illustrations, diagrams, or similar adjuncts to literary works; and (3) photographs. Within these categories, please describe or provide examples of the types of collections that you believe should be eligible for licensing under the ECL pilot. For example, should the pilot be limited to collections involving a minimum number of copyrighted works? If so, what should that threshold number be? Should collections that include commercially available works be eligible for ECL, or should the program cover only out-of-commerce works? Should the program be limited to works published before a certain

[1] *See* U.S. Copyright Office, Orphan Works and Mass Digitization: A Report of the Register of Copyrights (2015), *available at http://www.copyright.gov/orphan.*

[2] *See id.,* Appendix A.

date? If so, what date would be advisable?

b. Eligibility and Access. Please describe any appropriate limitations on the end-users who should be eligible to access a digital collection under a qualifying mass digitization project. For example, should access be limited to students, affiliates, and employees of the digitizing institution, or should ECL licensees be permitted to provide access to the general public? In addition, please describe any appropriate restrictions on methods of access. Should licensees be permitted to offer access to a collection remotely, or only through onsite computer terminals?

c. Security Requirements. The Office has recommended that CMOs and users be required to include, as part of any ECL license, terms requiring the user to implement and reasonably maintain adequate digital security measures to control access to the collection, and to prevent unauthorized reproduction, distribution, or display of the licensed works. Please describe any specific technical measures that should be required as part of this obligation. In addition, the Office invites stakeholder views on the extent to which specific security requirements should be set forth by statute or defined through Copyright Office regulations.

2. Dispute Resolution Process. The Office has recommended that the ECL pilot provide for a dispute resolution process before the Copyright Royalty Board (CRB) when an authorized CMO and a prospective user are unable to agree to licensing terms. The Office is interested in receiving public comment on what form this process should take. Should the legislation authorize informal mediation, with the CRB's role limited to that of a facilitator of negotiations? Or should the statute provide for binding arbitration? Some foreign ECL laws provide voluntary procedures under which parties can agree to submit their dispute to a binding proceeding, but are not required to do so.[3] Do those laws provide a workable dispute resolution model for a U.S. ECL program?

3. Distribution of Royalties. To ensure that rightsholders receive compensation within a reasonable time, the Office has recommended that the legislation or regulations establish a specific period within which a CMO must distribute royalties to rightsholders whom it has identified and located. Both the United Kingdom's ECL regulations and the European Union's February 2014 Directive on collective rights management generally require that such payments be made no later than nine months from the end of the financial year in which the royalties were collected.[4] In the United States, there is some industry precedent for distributions by CMOs on a quarterly basis.[5] What would be an appropriate timeframe for required distributions under a U.S. ECL program?

4. Diligent Search. The Office has recommended that a CMO be required to conduct diligent searches for non-member rightsholders for whom it has collected royalties. The Office believes that this obligation should include, but not be limited to, maintaining a publicly available list of information on all licensed works for which one or more rightsholders have not been identified or located.[6] What additional actions should be required as part of a CMO's diligent search obligation?

5. Other Issues. Please comment on any additional issues that the Copyright Office may wish to consider in developing draft ECL legislation.

Dated: June 4, 2015.

Karyn A. Temple Claggett,

Associate Register of Copyrights and Director of Policy and International Affairs.

[FR Doc. 2015–14116 Filed 6–8–15; 8:45 am]

BILLING CODE 1410–30–P

[3] *See* LOV 1961–05–12 nr 02: Lov om opphavsrett til åndsverk m.v. (åndsverkloven) [Act No. 2 of May 12, 1961 Relating to Copyright in Literary, Scientific and Artistic Works], as amended on Dec. 22, 2006, § 38 (Nor.), *translated at http://www.wipo.int/wipolex/en/text.jsp?file_id=248181* (unofficial translation), last amended by LOV–2014–06–13 nr 22 [Act No. 22 of June 13, 2014] (translation unavailable); Lag om medling i vissa upphovsrättstvister (Svensk författningssamling [SFS] 1980:612) [Act on Mediation in Certain Copyright Disputes] (1995) art. 5 (Swed.), *translated at http://www.wipo.int/wipolex/en/text.jsp?file_id=241666* (unofficial translation), as amended by Lag, May 26, 2005 (2005:361), *translated at http://www.wipo.int/wipolex/en/text.jsp?file_id=129617* (unofficial translation), last amended by Lag, June 27, 2013 (2013:690) (translation unavailable).

[4] Copyright and Rights in Performances (Extended Collective Licensing) Regulations 2014, S.I. 2014/2588, art. 18, ¶ 3 (U.K.) (''U.K. ECL Regulations''); Directive 2014/26/EU of the European Parliament and of the Council of 26 February 2014 on Collective Management of Copyright and Related Rights and Multi-Territorial Licensing of Rights in Musical Works for Online Use in the Internal Market, art. 13(1), 2014 O.J. (L 84) 72, 87, *available at http://eur-lex.europa.eu/legal-content/EN/TXT/PDF/?uri=CELEX:32014L0026&from=EN.*

[5] *See, e.g.,* Copyright Clearance Center, Royalty Payment Schedule (2014), *available at http://www.copyright.com/wp-content/uploads/2015/03/Royaltypaymentschedule.pdf; General FAQ,* SoundExchange, *http://www.soundexchange.com/about/general-faq/.*

[6] *Cf.* U.K. ECL Regulations, S.I. 2014/2588, art. 18, ¶ 5; Directive 2014/26/EU art. 13(3).

NATIONAL AERONAUTICS AND SPACE ADMINISTRATION

[Notice: (15–045)]

National Space-Based Positioning, Navigation, and Timing (PNT) Advisory Board; Charter Renewal

AGENCY: National Aeronautics and Space Administration (NASA).

ACTION: Notice of advisory committee renewal.

SUMMARY: Notice is hereby given that in accordance with the 2004 U.S. Space-Based PNT Policy and continuing and consistent Executive Branch PNT policy objectives since that time, it has been determined that the PNT Advisory Board comprised of experts from outside the United States Government continues to be necessary and in the public interest. Accordingly, NASA has renewed the charter of the National Space-Based PNT Advisory Board, effective May 8, 2015.

FOR FURTHER INFORMATION CONTACT: Mr. James J. Miller, Human Exploration and Operations Mission Directorate, NASA Headquarters, Washington, DC 20546, (202) 358–4417, fax (202) 358–4297, or *jj.miller@nasa.gov.*

SUPPLEMENTARY INFORMATION: The National Space-Based PNT Advisory Board provides advice on U.S. space-based PNT policy, planning, program management, and funding profiles in relation to the current state of national and international space-based PNT services. The National Space-Based PNT Advisory Board functions solely as an advisory body and complies fully with the provisions of the Federal Advisory Committee Act (FACA). Copies of the charter are filed with the General Services Administration, the appropriate Committees of the U.S. Congress, and the Library of Congress.

Patricia D. Rausch,

Advisory Committee Management Officer, National Aeronautics and Space Administration.

[FR Doc. 2015–13977 Filed 6–8–15; 8:45 am]

BILLING CODE 7510–13–P

NATIONAL ARCHIVES AND RECORDS ADMINISTRATION

[NARA–2015–046]

Agency Information Collection Activities: Proposed Collection; Comment Request

AGENCY: National Archives and Records Administration (NARA).

ACTION: Notice.

SUMMARY: NARA gives public notice that it proposes to request an extension of an approved information collection, Independent Researcher Listing Application, NA Form 14115, used by independent researchers to provide their contact information. We invite you to comment on this proposed information collection pursuant to the Paperwork Reduction Act of 1995.

DATES: We must receive written comments on or before August 10, 2015.

ADDRESSES: Send comments to Paperwork Reduction Act Comments (ISSD), Room 4400; National Archives and Records Administration; 8601 Adelphi Road; College Park, MD 20740–6001, fax them to 301–713–7409, or email them to *tamee.fechhelm@nara.gov.*

FOR FURTHER INFORMATION CONTACT: Contact Tamee Fechhelm by telephone at 301–837–1694 or fax at 301–713–7409 with requests for additional information or copies of the proposed information collections and supporting statements.

SUPPLEMENTARY INFORMATION: Pursuant to the Paperwork Reduction Act of 1995 (Pub. L. 104–13), NARA invites the public and other Federal agencies to comment on proposed information collections. The comments and suggestions should address one or more of the following points: (a) Whether the proposed information collection is necessary for NARA to properly perform its functions; (b) NARA's estimate of the burden of the proposed information collection and its accuracy; (c) ways NARA could enhance the quality, utility, and clarity of the information it collects; (d) ways NARA could minimize the burden on respondents of collecting the information, including through information technology; and (e) whether the collection affects small businesses. We will summarize any comments you submit and include the summary in our request for Office of Management and Budget (OMB) approval. All comments will become a matter of public record. In this notice, NARA solicits comments concerning the following information collection:

Title: Independent Researcher Listing Application.

OMB number: 3095–0054.

Agency form numbers: NA Form 14115.

Type of review: Regular.

Affected public: Individuals or households.

Estimated number of respondents: 458.

Estimated time per response: 10 minutes.

Frequency of response: On occasion.

Estimated total annual burden hours: 76.

Abstract: To accommodate both the public and NARA staff, the Customer Services Division (RD–DC) of the National Archives maintains a listing of independent researchers for the public. We make use of various lists of independent researchers who perform freelance research for hire in the Washington, DC, area and send them, upon request, to researchers who cannot travel to the metropolitan area to conduct their own research. All interested independent researchers provide their contact information via this form. Collecting contact and other key information from each independent researcher and providing such information to the public when deemed appropriate will only increase business. This form is not a burden in any way to any independent researcher who voluntarily submits a completed form. Inclusion on the list will not be viewed or advertised as an endorsement by the National Archives and Records Administration (NARA). The listing is compiled and disseminated as a service to the public.

Dated: May 28, 2015.

Swarnali Haldar,

Executive for Information Services/CIO.

[FR Doc. 2015–14064 Filed 6–8–15; 8:45 am]

BILLING CODE 7515–01–P

NATIONAL SCIENCE FOUNDATION

Committee on Equal Opportunities in Science and Engineering; Notice of Meeting

In accordance with the Federal Advisory Committee Act (Pub. L. 92–463, as amended), the National Science Foundation announces the following meeting:

Name: Committee on Equal Opportunities in Science and Engineering (CEOSE) Advisory Committee Meeting (1173).

Dates/Time: June 24, 2015 1:00 p.m.–5:00 p.m.; June 25, 2015 8:30 a.m.–3:30 p.m.

Place: National Science Foundation (NSF), 4201 Wilson Boulevard, Arlington, VA 22230.

To help facilitate your entry into the building, please contact Vickie Fung (*vfung@nsf.gov*) on or prior to June 18, 2015.

Type of Meeting: Open.

Contact Person: Dr. Joan Burrelli, Acting CEOSE Executive Secretary, Office of Integrative Activities (OIA), National Science Foundation, 4201 Wilson Boulevard, Arlington, VA 22230. Telephone Numbers: 703–292–8040/ Email: *jburrell@nsf.gov.*

Minutes: Meeting minutes and other information may be obtained from the Acting CEOSE Executive Secretary at the above address or the Web site at *http://www.nsf.gov/od/iia/activities/ceose/index.jsp.*

Purpose of Meeting: To study data, programs, policies, and other information pertinent to the National Science Foundation and to provide advice and recommendations concerning broadening participation in science and engineering.

Agenda

Opening Statement by the CEOSE Chair
NSF Executive Liaison Report
Discussions:
Leadership Panel Discussion: NSF INCLUDES (Inclusion across the Nation of Communities of Learners that have been Underrepresented for Diversity in Engineering and Science)
NSF Broadening Participation Framework for Action
Thematic Focus of Women and Girls in STEM
Reports of CEOSE Liaisons to NSF Advisory Committees
2015–2016 CEOSE Biennial Report to Congress
Updates from the Federal Liaisons

Dated: June 4, 2015.

Crystal Robinson,

Committee Management Officer.

[FR Doc. 2015–14036 Filed 6–8–15; 8:45 am]

BILLING CODE 7555–01–P

NUCLEAR REGULATORY COMMISSION

[NRC–2015–0123]

Applications and Amendments to Facility Operating Licenses and Combined Licenses Involving Proposed No Significant Hazards Considerations and Containing Sensitive Unclassified Non-Safeguards Information and Order Imposing Procedures for Access to Sensitive Unclassified Non-Safeguards Information

AGENCY: Nuclear Regulatory Commission.

ACTION: License amendment request; opportunity to comment, request a hearing, and petition for leave to intervene; order.

SUMMARY: The U.S. Nuclear Regulatory Commission (NRC) received and is considering approval of two amendment

requests. The amendment requests are for Indian Point Nuclear Generating, Unit 3; and St. Lucie Plant, Unit 2. The NRC proposes to determine that each amendment request involves no significant hazards consideration. In addition, each amendment request contains sensitive unclassified non-safeguards information (SUNSI).

DATES: Comments must be filed by July 9, 2015. A request for a hearing must be filed by August 10, 2015. Any potential party as defined in § 2.4 of Title 10 of the *Code of Federal Regulations* (10 CFR), who believes access to SUNSI is necessary to respond to this notice must request document access by June 19, 2015.

ADDRESSES: You may submit comments by any of the following methods (unless this document describes a different method for submitting comments on a specific subject):

- *Federal Rulemaking Web site:* Go to *http://www.regulations.gov* and search for Docket ID NRC–2015–0123. Address questions about NRC dockets to Carol Gallagher; telephone: 301–415–3463; email: *Carol.Gallagher@nrc.gov.* For technical questions, contact the individual listed in the **FOR FURTHER INFORMATION CONTACT** section of this document.
- *Mail comments to:* Cindy Bladey, Office of Administration, Mail Stop: OWFN–12–H08, U.S. Nuclear Regulatory Commission, Washington, DC 20555–0001.

For additional direction on obtaining information and submitting comments, see ''Obtaining Information and Submitting Comments'' in the **SUPPLEMENTARY INFORMATION** section of this document.

FOR FURTHER INFORMATION CONTACT: Shirley Rohrer, Office of Nuclear Reactor Regulation, U.S. Nuclear Regulatory Commission, Washington DC 20555–0001; telephone: 301–415–5411, email: *Shirley.Rohrer@nrc.gov.*

SUPPLEMENTARY INFORMATION:

I. Obtaining Information and Submitting Comments

A. Obtaining Information

Please refer to Docket ID NRC–2015–0123 when contacting the NRC about the availability of information for this action. You may obtain publicly-available information related to this action by any of the following methods:

- *Federal Rulemaking Web site:* Go to *http://www.regulations.gov* and search for Docket ID NRC–2015–0123.
- *NRC's Agencywide Documents Access and Management System (ADAMS):* You may obtain publicly-available documents online in the ADAMS Public Documents collection at *http://www.nrc.gov/reading-rm/adams.html.* To begin the search, select ''*ADAMS Public Documents''* and then select ''*Begin Web-based ADAMS Search.''* For problems with ADAMS, please contact the NRC's Public Document Room (PDR) reference staff at 1–800–397–4209, 301–415–4737, or by email to *pdr.resource@nrc.gov.* The ADAMS accession number for each document referenced (if it is available in ADAMS) is provided the first time that it is mentioned in the **SUPPLEMENTARY INFORMATION** section.
- *NRC's PDR:* You may examine and purchase copies of public documents at the NRC's PDR, Room O1–F21, One White Flint North, 11555 Rockville Pike, Rockville, Maryland 20852.

B. Submitting Comments

Please include Docket ID NRC–2015–0123, facility name, unit number(s), application date, and subject in your comment submission.

The NRC cautions you not to include identifying or contact information that you do not want to be publicly disclosed in your comment submission. The NRC will post all comment submissions at *http://www.regulations.gov* as well as enter the comment submissions into ADAMS. The NRC does not routinely edit comment submissions to remove identifying or contact information.

If you are requesting or aggregating comments from other persons for submission to the NRC, then you should inform those persons not to include identifying or contact information that they do not want to be publicly disclosed in their comment submission. Your request should state that the NRC does not routinely edit comment submissions to remove such information before making the comment submissions available to the public or entering the comment submissions into ADAMS.

II. Background

Pursuant to Section 189a.(2) of the Atomic Energy Act of 1954, as amended (the Act), the NRC is publishing this notice. The Act requires the Commission to publish notice of any amendments issued, or proposed to be issued and grants the Commission the authority to issue and make immediately effective any amendment to an operating license or combined license, as applicable, upon a determination by the Commission that such amendment involves no significant hazards consideration, notwithstanding the pendency before the Commission of a request for a hearing from any person.

This notice includes notices of amendments containing SUNSI.

III. Notice of Consideration of Issuance of Amendments to Facility Operating Licenses and Combined Licenses, Proposed No Significant Hazards Consideration Determination, and Opportunity for a Hearing

The Commission has made a proposed determination that the following amendment requests involve no significant hazards consideration. Under the Commission's regulations in 10 CFR 50.92, this means that operation of the facility in accordance with the proposed amendment would not (1) involve a significant increase in the probability or consequences of an accident previously evaluated, or (2) create the possibility of a new or different kind of accident from any accident previously evaluated, or (3) involve a significant reduction in a margin of safety. The basis for this proposed determination for each amendment request is shown below.

The Commission is seeking public comments on this proposed determination. Any comments received within 30 days after the date of publication of this notice will be considered in making any final determination.

Normally, the Commission will not issue the amendment until the expiration of 60 days after the date of publication of this notice. The Commission may issue the license amendment before expiration of the 60-day period provided that its final determination is that the amendment involves no significant hazards consideration. In addition, the Commission may issue the amendment prior to the expiration of the 30-day comment period should circumstances change during the 30-day comment period such that failure to act in a timely way would result, for example, in derating or shutdown of the facility. Should the Commission take action prior to the expiration of either the comment period or the notice period, it will publish a notice of issuance in the **Federal Register**. Should the Commission make a final No Significant Hazards Consideration Determination, any hearing will take place after issuance. The Commission expects that the need to take this action will occur very infrequently.

A. Opportunity To Request a Hearing and Petition for Leave To Intervene

Within 60 days after the date of publication of this notice, any person(s)

whose interest may be affected by this action may file a request for a hearing and a petition to intervene with respect to issuance of the amendment to the subject facility operating license or combined license. Requests for a hearing and a petition for leave to intervene shall be filed in accordance with the Commission's ''Agency Rules of Practice and Procedure'' in 10 CFR part 2. Interested person(s) should consult a current copy of 10 CFR 2.309, which is available at the NRC's PDR, located at One White Flint North, Room O1–F21, 11555 Rockville Pike (first floor), Rockville, Maryland 20852. The NRC's regulations are accessible electronically from the NRC Library on the NRC's Web site at *http://www.nrc.gov/reading-rm/doc-collections/cfr/.* If a request for a hearing or petition for leave to intervene is filed within 60 days, the Commission or a presiding officer designated by the Commission or by the Chief Administrative Judge of the Atomic Safety and Licensing Board Panel, will rule on the request and/or petition; and the Secretary or the Chief Administrative Judge of the Atomic Safety and Licensing Board will issue a notice of a hearing or an appropriate order.

As required by 10 CFR 2.309, a petition for leave to intervene shall set forth with particularity the interest of the petitioner in the proceeding, and how that interest may be affected by the results of the proceeding. The petition should specifically explain the reasons why intervention should be permitted with particular reference to the following general requirements: (1) the name, address, and telephone number of the requestor or petitioner; (2) the nature of the requestor's/petitioner's right under the Act to be made a party to the proceeding; (3) the nature and extent of the requestor's/petitioner's property, financial, or other interest in the proceeding; and (4) the possible effect of any decision or order which may be entered in the proceeding on the requestor's/petitioner's interest. The petition must also set forth the specific contentions which the requestor/petitioner seeks to have litigated at the proceeding.

Each contention must consist of a specific statement of the issue of law or fact to be raised or controverted. In addition, the requestor/petitioner shall provide a brief explanation of the bases for the contention and a concise statement of the alleged facts or expert opinion which support the contention and on which the requestor/petitioner intends to rely in proving the contention at the hearing. The requestor/petitioner must also provide references to those specific sources and documents of which the petitioner is aware and on which the requestor/petitioner intends to rely to establish those facts or expert opinion. The petition must include sufficient information to show that a genuine dispute exists with the applicant on a material issue of law or fact. Contentions shall be limited to matters within the scope of the amendment under consideration. The contention must be one which, if proven, would entitle the requestor/petitioner to relief. A requestor/petitioner who fails to satisfy these requirements with respect to at least one contention will not be permitted to participate as a party.

Those permitted to intervene become parties to the proceeding, subject to any limitations in the order granting leave to intervene, and have the opportunity to participate fully in the conduct of the hearing.

If a hearing is requested, and the Commission has not made a final determination on the issue of no significant hazards consideration, the Commission will make a final determination on the issue of no significant hazards consideration. The final determination will serve to decide when the hearing is held. If the final determination is that the amendment request involves no significant hazards consideration, the Commission may issue the amendment and make it immediately effective, notwithstanding the request for a hearing. Any hearing held would take place after issuance of the amendment. If the final determination is that the amendment request involves a significant hazards consideration, then any hearing held would take place before the issuance of any amendment unless the Commission finds an imminent danger to the health or safety of the public, in which case it will issue an appropriate order or rule under 10 CFR part 2.

B. Electronic Submissions (E-Filing)

All documents filed in NRC adjudicatory proceedings, including a request for hearing, a petition for leave to intervene, any motion or other document filed in the proceeding prior to the submission of a request for hearing or petition to intervene, and documents filed by interested governmental entities participating under 10 CFR 2.315(c), must be filed in accordance with the NRC's E-Filing rule (72 FR 49139; August 28, 2007). The E-Filing process requires participants to submit and serve all adjudicatory documents over the internet, or in some cases to mail copies on electronic storage media. Participants may not submit paper copies of their filings unless they seek an exemption in accordance with the procedures described below.

To comply with the procedural requirements of E-Filing, at least ten 10 days prior to the filing deadline, the participant should contact the Office of the Secretary by email at *hearing.docket@nrc.gov,* or by telephone at 301–415–1677, to request (1) a digital identification (ID) certificate, which allows the participant (or its counsel or representative) to digitally sign documents and access the E-Submittal server for any proceeding in which it is participating; and (2) advise the Secretary that the participant will be submitting a request or petition for hearing (even in instances in which the participant, or its counsel or representative, already holds an NRC-issued digital ID certificate). Based upon this information, the Secretary will establish an electronic docket for the hearing in this proceeding if the Secretary has not already established an electronic docket.

Information about applying for a digital ID certificate is available on the NRC's public Web site at *http://www.nrc.gov/site-help/e-submittals/getting-started.html.* System requirements for accessing the E-Submittal server are detailed in the NRC's ''Guidance for Electronic Submission,'' which is available on the agency's public Web site at *http://www.nrc.gov/site-help/e-submittals.html.* Participants may attempt to use other software not listed on the Web site, but should note that the NRC's E-Filing system does not support unlisted software, and the NRC Meta System Help Desk will not be able to offer assistance in using unlisted software.

If a participant is electronically submitting a document to the NRC in accordance with the E-Filing rule, the participant must file the document using the NRC's online, Web-based submission form. In order to serve documents through the Electronic Information Exchange System, users will be required to install a Web browser plug-in from the NRC's Web site. Further information on the Web-based submission form, including the installation of the Web browser plug-in, is available on the NRC's public Web site at *http://www.nrc.gov/site-help/e-submittals.html.*

Once a participant has obtained a digital ID certificate and a docket has been created, the participant can then submit a request for hearing or petition for leave to intervene. Submissions

should be in Portable Document Format (PDF) in accordance with NRC guidance available on the NRC's public Web site at *http://www.nrc.gov/site-help/e-submittals.html.* A filing is considered complete at the time the documents are submitted through the NRC's E-Filing system. To be timely, an electronic filing must be submitted to the E-Filing system no later than 11:59 p.m. Eastern Time on the due date. Upon receipt of a transmission, the E-Filing system time-stamps the document and sends the submitter an email notice confirming receipt of the document. The E-Filing system also distributes an email notice that provides access to the document to the NRC's Office of the General Counsel and any others who have advised the Office of the Secretary that they wish to participate in the proceeding, so that the filer need not serve the documents on those participants separately. Therefore, applicants and other participants (or their counsel or representative) must apply for and receive a digital ID certificate before a hearing request/petition to intervene is filed so that they can obtain access to the document via the E-Filing system.

A person filing electronically using the NRC's adjudicatory E-Filing system may seek assistance by contacting the NRC Meta System Help Desk through the ''Contact Us'' link located on the NRC's public Web site at *http://www.nrc.gov/site-help/e-submittals.html,* by email to *MSHD.Resource@nrc.gov,* or by a toll-free call at 1–866–672–7640. The NRC Meta System Help Desk is available between 8 a.m. and 8 p.m., Eastern Time, Monday through Friday, excluding government holidays.

Participants who believe that they have a good cause for not submitting documents electronically must file an exemption request, in accordance with 10 CFR 2.302(g), with their initial paper filing requesting authorization to continue to submit documents in paper format. Such filings must be submitted by: (1) First class mail addressed to the Office of the Secretary of the Commission, U.S. Nuclear Regulatory Commission, Washington, DC 20555–0001, Attention: Rulemaking and Adjudications Staff; or (2) courier, express mail, or expedited delivery service to the Office of the Secretary, Sixteenth Floor, One White Flint North, 11555 Rockville Pike, Rockville, Maryland 20852, Attention: Rulemaking and Adjudications Staff. Participants filing a document in this manner are responsible for serving the document on all other participants. Filing is considered complete by first-class mail as of the time of deposit in the mail, or by courier, express mail, or expedited delivery service upon depositing the document with the provider of the service. A presiding officer, having granted an exemption request from using E-Filing, may require a participant or party to use E-Filing if the presiding officer subsequently determines that the reason for granting the exemption from use of E-Filing no longer exists.

Documents submitted in adjudicatory proceedings will appear in the NRC's electronic hearing docket which is available to the public at *http://ehd1.nrc.gov/ehd/,* unless excluded pursuant to an order of the Commission, or the presiding officer. Participants are requested not to include personal privacy information, such as social security numbers, home addresses, or home phone numbers in their filings, unless an NRC regulation or other law requires submission of such information. However, in some instances, a request to intervene will require including information on local residence in order to demonstrate a proximity assertion of interest in the proceeding. With respect to copyrighted works, except for limited excerpts that serve the purpose of the adjudicatory filings and would constitute a Fair Use application, participants are requested not to include copyrighted materials in their submission.

Petitions for leave to intervene must be filed no later than 60 days from the date of publication of this notice. Requests for hearing, petitions for leave to intervene, and motions for leave to file new or amended contentions that are filed after the 60-day deadline will not be entertained absent a determination by the presiding officer that the filing demonstrates good cause by satisfying the three factors in 10 CFR 2.309(c)(1)(i)–(iii).

For further details with respect to this amendment action, see the application for amendment which is available for public inspection at the NRC's PDR, located at One White Flint North, Room O1–F21, 11555 Rockville Pike (first floor), Rockville, Maryland 20852. Publicly available documents created or received at the NRC are accessible electronically through ADAMS in the NRC Library at *http://www.nrc.gov/reading-rm/adams.html.* If you do not have access to ADAMS or if there are problems in accessing the documents located in ADAMS, contact the PDR's Reference staff at 1–800–397–4209, 301–415–4737, or by email to *pdr.resource@nrc.gov.*

Entergy Nuclear Operations, Inc., Docket No. 50–286, Indian Point Nuclear Generating, Unit 3, Westchester County, New York

Date of amendment request: February 12, 2015. A publicly-available version is in ADAMS under Accession No. ML15061A275.

Description of amendment request: This amendment request contains sensitive unclassified non-safeguards information (SUNSI). The amendment would revise the Reactor Coolant System (RCS) heatup and cooldown limitations in the Unit 3 Technical Specification (TS) 3.4.3, and the Low Temperature Overpressure Protection System requirements in Unit 3 TS 3.4.12 in order to compensate for an increased service life. The existing RCS pressure and temperature limits are valid for a lifetime burnup of 27.2 Effective Full Power Years (EFPY), which is estimated to be reached by September 2015, and the revised limits are for a lifetime burnup of 37 EFPY, which are not anticipated to be reached until December 2023.

Basis for proposed no significant hazards consideration determination: As required by 10 CFR 50.91(a), the licensee has provided its analysis of the issue of no significant hazards consideration, which is presented below:

Entergy has determined that this proposed TS change does not involve a significant hazards consideration as defined by 10 CFR 50.92(c).

1. Operation of the facility in accordance with the proposed amendment would not involve a significant increase in the probability of occurrence or consequences of an accident previously evaluated.

The proposed TS [technical specification] changes do not involve a significant increase in the probability or consequences of an accident previously evaluated. Except for a setpoint change for automatic PORV [power-operated operated relief valve] actuation, there are no physical changes to the plant being introduced by the proposed changes to the heatup and cooldown limitation curves. The proposed changes do not modify the RCS [reactor coolant system] pressure boundary. That is, there are no changes in operating pressure, materials, or seismic loading. The proposed changes do not adversely affect the integrity of the RCS pressure boundary such that its function in the control of radiological consequences is affected. The proposed heatup and cooldown limitation curves were generated in accordance with the fracture toughness requirements of 10 CFR [Part] 50, Appendix G, and ASME B&PV code [American Society of Mechanical Engineers Boiler & Pressure Vessel code], Section XI, Appendix G, to the 1998 edition through the 2000 Addenda. The proposed heatup and cooldown limitation curves were established in compliance with the methodology used to

calculate and predict effects of radiation on embrittlement of RPV [reactor pressure vessel] beltline materials. Use of this methodology provides compliance with 10 CFR [Part] 50 Appendix G and provides margins of safety that ensure non-ductile failure of the RPV and the other RCS carbon and low alloy steel components will not occur. The proposed heatup and cooldown limitation curves prohibit operation in regions where it is possible for non-ductile failure of carbon and low alloy RCS materials to occur. Hence, the primary coolant pressure boundary integrity will be maintained throughout the limit of applicability of the curves, 37 EFPY [effective full-power years].

Operation within the proposed Low Temperature Overpressure Protection System (LTOP) limits ensures that overpressurization of the RCS at low temperatures will not result in component stresses in excess of those allowed by the ASME B&PV Code Section Xl Appendix G.

Consequently, the proposed changes do not involve a significant increase in the probability or the consequences of an accident previously evaluated.

2. Operation of the facility in accordance with the proposed amendment would not create the possibility of a new or different kind of accident from any accident previously evaluated.

The proposed TS changes do not create the possibility of a new or different kind of accident from any accident previously evaluated. No new modes of operation are introduced by the proposed changes. The proposed changes will not create any failure mode not bounded by previously evaluated accidents. Further, the proposed changes to the heatup and cooldown limitation curves and the LTOP limits do not affect any activities or equipment other than the RCS pressure boundary and do not create the possibility of a new or different kind of accident from any accident previously evaluated.

Consequently, the proposed changes do not create the possibility of a new or different kind of accident, from any accident previously evaluated.

3. Operation of the facility in accordance with the proposed amendment would not involve a significant reduction in the margin of safety.

The proposed TS changes do not involve a significant reduction in the margin of safety. The revised heatup and cooldown limitation curves and LTOP limits are established in accordance with current regulations and the ASME B&PV Code 1998 edition through the 2000 Addenda, Appendix G. These proposed changes are acceptable because the ASME B&PV Code maintains the margin of safety required by 10 CFR [Part] 50, Appendix G. Because operation will be within these limits, the RCS materials will continue to behave in a non-brittle manner consistent with the original design bases.

Therefore, Entergy has concluded that the proposed changes do not involve a significant reduction in a margin of safety.

The NRC staff has reviewed the licensee's analysis and, based on this review, it appears that the three standards of 10 CFR 50.92(c) are satisfied. Therefore, the NRC staff proposes to determine that the amendment request involves no significant hazards consideration.

Attorney for licensee: Jeanne Cho, Assistant General Counsel, Entergy Nuclear Operations, Inc., 440 Hamilton Avenue, White Plains, New York 10601.

Acting NRC Branch Chief: Michael I. Dudek.

Florida Power and Light Company (FPL), Docket No. 50–389, St. Lucie Plant, Unit 2 (SL–2), St. Lucie County, Florida

Date of amendment request: December 30, 2014, as supplemented by letter dated March 23, 2015. Publicly-available versions are in ADAMS under Accession Nos. ML15002A091 and ML15084A011, respectively.

Description of amendment request: This amendment request contains sensitive unclassified non-safeguards information (SUNSI). The amendment would revise the Technical Specifications (TSs) to allow for the use of AREVA fuel at SL–2. Additionally, pursuant to 10 CFR 50.12, FPL requests an exemption from the provisions of 10 CFR 50.46, ''Acceptance criteria for emergency core cooling systems (ECCS) for light-water nuclear power reactors,'' and appendix K to 10 CFR part 50, ''ECCS Evaluation Models,'' to allow for the use of M5® fuel rod cladding in future core reload applications for SL–2.

Basis for proposed no significant hazards consideration determination: As required by 10 CFR 50.91(a), the licensee has provided its analysis of the issue of no significant hazards consideration, which is presented below:

1. Does the proposed change involve a significant increase in the probability or consequences of an accident previously evaluated?

Response:

The proposed changes for St. Lucie Units 2 revise the Technical Specification (TS) 5.3.1 to include M5® cladding, delete the linear heat rate surveillance requirement with W(z) in TS 4.2.1.3 and include previously approved AREVA Topical Reports in the list of COLR [core operating limits report] methodologies in TS 6.9.1.11. [Another] change is in TS License Condition 3.N, which is related to future analysis of the current fuel and is considered an administrative change, all as a result of changing the fuel supplier.

The fuel assembly design is not an initiator to any accident previously evaluated. Therefore, there is no significant increase in the probability of any accident previously evaluated. However, the fuel design parameters and the correlations used in the analyses supporting the operation of St. Lucie Unit 2 with the new proposed AREVA fuel are dependent on the fuel assembly design. All the analyses, potentially impacted by the fuel design, have been re-analyzed using the correlations and the methodology applicable to the proposed fuel design and previously approved by the NRC for similar applications. There are no changes to any limits specified in the Technical Specifications. M5® cladding to be used in the proposed AREVA fuel design has been previously approved by the NRC for PWR [pressurized-water reactor] applications, including St. Lucie Unit 1. The core design peaking factors remain unchanged from the current analyses values, except for the large break LOCA [loss-of-coolant accident] which is shown to meet all the 10 CFR 50.46 criteria with the increased peak linear heat rate limit.

Therefore, the proposed changes do not involve a significant increase in the probability or consequences of an accident previously evaluated.

2. Does the proposed change create the possibility of a new or different kind of accident from any accident previously evaluated?

Response:

No new or different accidents result from utilizing the proposed AREVA CE [combustion engineering] 16x16 fuel design. Other than the fuel design change, the proposed license amendment does not involve a physical alteration of the plant or plant systems (*i.e.,* no new or different type of equipment will be installed which would create a new or different kind of accident). The change to the linear heat rate surveillance requirement, when operating on excore detector monitoring system, and the use of M5® cladding do not affect or create any accident initiator. There is no change to the methods governing normal plant operation and the changes do not impose any new or different operating requirements. The core monitoring system remains unchanged.

Therefore, the proposed change does not create the possibility of a new or different kind of accident from any accident previously evaluated.

3. Does the proposed change involve a significant reduction in a margin of safety?

Response:

The changes proposed in this license amendment request are related to the fuel design with M5® cladding and the methodology supporting the analysis of accidents impacted by the fuel design change. The analysis methods used are previously approved by the NRC for similar applications. The change to the surveillance requirement for the linear heat rate does not change any accident analysis requirements. The fuel design limits related to the DNBR [departure from nuclear boiling ratio] and fuel centerline melt remain consistent with the limits previously approved for the proposed fuel design change. The overpressure limits for the reactor coolant system integrity and the containment integrity remain unchanged. All the analyses performed to support the fuel design change meet all applicable acceptance criteria. The LOCA analyses, with the peak linear heat rate limit increase, continue to meet all the applicable 10 CFR 50.46 acceptance criteria,

and thus the proposed changes do not affect margin to safety for any accidents previously evaluated.

Therefore, the proposed changes do not involve a significant reduction in a margin of safety.

Based on the previous discussion of the amendment request, it is determined that the proposed amendment does not: (1) Involve a significant increase in the probability or consequences of an accident previously evaluated; (2) create the possibility of a new or different kind of accident from any previously evaluated; nor (3) involve a significant reduction in a margin of safety. [Therefore,] the amendment does not involve a significant hazards consideration.

The NRC staff has reviewed the licensee's analysis and, based on this review, it appears that the three standards of 10 CFR 50.92(c) are satisfied. Therefore, the NRC staff proposes to determine that the amendment request involves no significant hazards consideration.

Attorney for licensee: William S. Blair, Managing Attorney—Nuclear, Florida Power & Light, P.O. Box 14000, Juno Beach, Florida 33408–0420.

NRC Branch Chief: Shana R. Helton.

Order Imposing Procedures for Access to Sensitive Unclassified Non-Safeguards Information for Contention Preparation

Entergy Nuclear Operations, Inc., Docket No. 50–286, Indian Point Nuclear Generating, Unit 3, Westchester County, New York

Florida Power and Light Company, Docket No. 50–389, St. Lucie Plant, Unit 2, St. Lucie County, Florida

A. This Order contains instructions regarding how potential parties to this proceeding may request access to documents containing SUNSI.

B. Within 10 days after publication of this notice of hearing and opportunity to petition for leave to intervene, any potential party who believes access to SUNSI is necessary to respond to this notice may request such access. A ''potential party'' is any person who intends to participate as a party by demonstrating standing and filing an admissible contention under 10 CFR 2.309. Requests for access to SUNSI submitted later than 10 days after publication of this notice will not be considered absent a showing of good cause for the late filing, addressing why the request could not have been filed earlier.

C. The requester shall submit a letter requesting permission to access SUNSI to the Office of the Secretary, U.S. Nuclear Regulatory Commission, Washington, DC 20555–0001, Attention: Rulemakings and Adjudications Staff, and provide a copy to the Associate General Counsel for Hearings, Enforcement and Administration, Office of the General Counsel, Washington, DC 20555–0001. The expedited delivery or courier mail address for both offices is: U.S. Nuclear Regulatory Commission, 11555 Rockville Pike, Rockville, Maryland 20852. The email address for the Office of the Secretary and the Office of the General Counsel are *Hearing.Docket@nrc.gov* and *OGCmailcenter@nrc.gov*, respectively.[1] The request must include the following information:

(1) A description of the licensing action with a citation to this **Federal Register** notice;

(2) The name and address of the potential party and a description of the potential party's particularized interest that could be harmed by the action identified in C.(1); and

(3) The identity of the individual or entity requesting access to SUNSI and the requester's basis for the need for the information in order to meaningfully participate in this adjudicatory proceeding. In particular, the request must explain why publicly-available versions of the information requested would not be sufficient to provide the basis and specificity for a proffered contention.

D. Based on an evaluation of the information submitted under paragraph C.(3) the NRC staff will determine within 10 days of receipt of the request whether:

(1) There is a reasonable basis to believe the petitioner is likely to establish standing to participate in this NRC proceeding; and

(2) The requestor has established a legitimate need for access to SUNSI.

E. If the NRC staff determines that the requestor satisfies both D.(1) and D.(2) above, the NRC staff will notify the requestor in writing that access to SUNSI has been granted. The written notification will contain instructions on how the requestor may obtain copies of the requested documents, and any other conditions that may apply to access to those documents. These conditions may include, but are not limited to, the signing of a Non-Disclosure Agreement or Affidavit, or Protective Order[2] setting forth terms and conditions to prevent the unauthorized or inadvertent disclosure of SUNSI by each individual who will be granted access to SUNSI.

F. Filing of Contentions. Any contentions in these proceedings that are based upon the information received as a result of the request made for SUNSI must be filed by the requestor no later than 25 days after the requestor is granted access to that information. However, if more than 25 days remain between the date the petitioner is granted access to the information and the deadline for filing all other contentions (as established in the notice of hearing or opportunity for hearing), the petitioner may file its SUNSI contentions by that later deadline. This provision does not extend the time for filing a request for a hearing and petition to intervene, which must comply with the requirements of 10 CFR 2.309.

G. Review of Denials of Access.

(1) If the request for access to SUNSI is denied by the NRC staff after a determination on standing and need for access, the NRC staff shall immediately notify the requestor in writing, briefly stating the reason or reasons for the denial.

(2) The requester may challenge the NRC staff's adverse determination by filing a challenge within 5 days of receipt of that determination with: (a) the presiding officer designated in this proceeding; (b) if no presiding officer has been appointed, the Chief Administrative Judge, or if he or she is unavailable, another administrative judge, or an administrative law judge with jurisdiction pursuant to 10 CFR 2.318(a); or (c) officer if that officer has been designated to rule on information access issues.

H. Review of Grants of Access. A party other than the requester may challenge an NRC staff determination granting access to SUNSI whose release would harm that party's interest independent of the proceeding. Such a challenge must be filed with the Chief Administrative Judge within five days of the notification by the NRC staff of its grant of access.

If challenges to the NRC staff determinations are filed, these procedures give way to the normal process for litigating disputes concerning access to information. The availability of interlocutory review by the Commission of orders ruling on such NRC staff determinations (whether

[1] While a request for hearing or petition to intervene in this proceeding must comply with the filing requirements of the NRC's ''E-Filing Rule,'' the initial request to access SUNSI under these procedures should be submitted as described in this paragraph.

[2] Any motion for Protective Order or draft Non-Disclosure Affidavit or Agreement for SUNSI must be filed with the presiding officer or the Chief Administrative Judge if the presiding officer has not yet been designated, within 30 days of the deadline for the receipt of the written access request.

granting or denying access) is governed by 10 CFR 2.311.[3]

I. The Commission expects that the NRC staff and presiding officers (and any other reviewing officers) will consider and resolve requests for access to SUNSI, and motions for protective orders, in a timely fashion in order to minimize any unnecessary delays in identifying those petitioners who have standing and who have propounded contentions meeting the specificity and basis requirements in 10 CFR part 2. Attachment 1 to this Order summarizes the general target schedule for processing and resolving requests under these procedures.

It is so ordered.

Dated at Rockville, Maryland, this 20th day of May, 2015.

For the Nuclear Regulatory Commission.

Annette L. Vietti-Cook,

Secretary of the Commission.

ATTACHMENT 1—GENERAL TARGET SCHEDULE FOR PROCESSING AND RESOLVING REQUESTS FOR ACCESS TO SENSITIVE UNCLASSIFIED NON-SAFEGUARDS INFORMATION IN THIS PROCEEDING

Day	Event/Activity
0	Publication of **Federal Register** notice of hearing and opportunity to petition for leave to intervene, including order with instructions for access requests.
10	Deadline for submitting requests for access to Sensitive Unclassified Non-Safeguards Information (SUNSI) with information: Supporting the standing of a potential party identified by name and address; describing the need for the information in order for the potential party to participate meaningfully in an adjudicatory proceeding.
60	Deadline for submitting petition for intervention containing: (i) Demonstration of standing; and (ii) all contentions whose formulation does not require access to SUNSI (+25 Answers to petition for intervention; +7 petitioner/requestor reply).
20	U.S. Nuclear Regulatory Commission (NRC) staff informs the requester of the staff's determination whether the request for access provides a reasonable basis to believe standing can be established and shows need for SUNSI. (NRC staff also informs any party to the proceeding whose interest independent of the proceeding would be harmed by the release of the information.) If NRC staff makes the finding of need for SUNSI and likelihood of standing, NRC staff begins document processing (preparation of redactions or review of redacted documents).
25	If NRC staff finds no ''need'' or no likelihood of standing, the deadline for petitioner/requester to file a motion seeking a ruling to reverse the NRC staff's denial of access; NRC staff files copy of access determination with the presiding officer (or Chief Administrative Judge or other designated officer, as appropriate). If NRC staff finds ''need'' for SUNSI, the deadline for any party to the proceeding whose interest independent of the proceeding would be harmed by the release of the information to file a motion seeking a ruling to reverse the NRC staff's grant of access.
30	Deadline for NRC staff reply to motions to reverse NRC staff determination(s).
40	(Receipt +30) If NRC staff finds standing and need for SUNSI, deadline for NRC staff to complete information processing and file motion for Protective Order and draft Non-Disclosure Affidavit. Deadline for applicant/licensee to file Non-Disclosure Agreement for SUNSI.
A	If access granted: Issuance of presiding officer or other designated officer decision on motion for protective order for access to sensitive information (including schedule for providing access and submission of contentions) or decision reversing a final adverse determination by the NRC staff.
A + 3	Deadline for filing executed Non-Disclosure Affidavits. Access provided to SUNSI consistent with decision issuing the protective order.
A + 28	Deadline for submission of contentions whose development depends upon access to SUNSI. However, if more than 25 days remain between the petitioner's receipt of (or access to) the information and the deadline for filing all other contentions (as established in the notice of hearing or opportunity for hearing), the petitioner may file its SUNSI contentions by that later deadline.
A + 53	(Contention receipt +25) Answers to contentions whose development depends upon access to SUNSI.
A + 60	(Answer receipt +7) Petitioner/Intervenor reply to answers.
>A + 60	Decision on contention admission.

[FR Doc. 2015–12783 Filed 6–8–15; 8:45 am]

BILLING CODE 7590–01–P

NUCLEAR REGULATORY COMMISSION

[NRC–2014–0081]

Standard Format and Content of Transportation Security Plans for Classified Matter Shipments

AGENCY: Nuclear Regulatory Commission.

ACTION: Regulatory guide; issuance.

SUMMARY: The U.S. Nuclear Regulatory Commission (NRC) is issuing a new Regulatory Guide (RG) 7.13, ''Standard Format and Content of Transportation Security Plans for Classified Matter Shipments.'' The guide describes a method that NRC staff considers acceptable for compliance with the agency's regulations with regard to the development of classified matter transportation security plans, which identify the correct measures to protect classified matter while in transport.

ADDRESSES: The document will be available for those who have established a ''need-to-know'' and possess access permission to Official Use Only—Security Related Information (OUO–SRI). To obtain the document, contact: Al Tardiff, Office of Nuclear Security and Incident Response, telephone: 301–287–3616 or email: *Al.Tardiff@nrc.gov.*

FOR FURTHER INFORMATION CONTACT: Al Tardiff, Office of Nuclear Security and Incident Response, telephone: 301–287–3616, email: *Al.Tardiff@nrc.gov,* or Mekonen Bayssie, Office of Nuclear Regulatory Research, telephone: 301–251–7489, email: *Mekonen.Bayssie@nrc.gov.* U.S. Nuclear Regulatory Commission, Washington, DC 20555–0001.

SUPPLEMENTARY INFORMATION:

I. Introduction

The NRC is issuing a new guide in the NRC's ''Regulatory Guide'' series. This series was developed to describe and make available to the public information regarding methods that are acceptable to the NRC staff for implementing specific

[3] Requesters should note that the filing requirements of the NRC's E-Filing Rule (72 FR 49139; August 28, 2007) apply to appeals of NRC staff determinations (because they must be served on a presiding officer or the Commission, as applicable), but not to the initial SUNSI request submitted to the NRC staff under these procedures.

parts of the agency's regulations, techniques that the staff uses in evaluating specific issues or postulated events, and data that the staff needs in its review of applications for permits and licenses.

Regulatory guide RG 7.13 is withheld from public disclosure but is available to those affected licensees and cleared stakeholders who can or have demonstrated a need to know. The ''Backfitting and Issue Finality'' section describes previously issued guidance on this subject, which is entitled, Interim Staff Guidance (ISG) DSP–ISG–01, *Staff Review Procedure for Transportation Security Plans for Classified Matter Shipments* (July 7, 2006). This document also contains OUO–SRI information.

II. Additional Information

DG–7005, was published in the **Federal Register** on April 25, 2014 (79 FR 23015) for a 60-day stakeholders' comment period. The stakeholders' comment period closed on June 24, 2014. Stakeholders' comments on DG–7005 and the staff responses to the stakeholders' comments can be obtained the individuals listed in the **FOR FURTHER INFORMATION** section of this document.

III. Congressional Review Act

This regulatory guide is a rule as defined in the Congressional Review Act (5 U.S.C. 801–808). However, the Office of Management and Budget has not found it to be a major rule as defined in the Congressional Review Act.

III. Backfitting and Issue Finality

Issuance of this final regulatory guide does not constitute backfitting as defined in 10 CFR 50.109 (the Backfit Rule) and is not otherwise inconsistent with the issue finality provisions in 10 CFR part 52. This RG provides guidance on development of transportation security plans to protect classified information while such information is in transport, in order to meet the requirements of 10 CFR part 95. The staff has previously issued guidance on this subject in DSP–ISG–01, *Staff Review Procedure for Transportation Security Plans for Classified Matter Shipments* (July 7, 2006). The staff will use the guidance in the review and approval of new and amended transportation security plans submitted to the NRC. Current licensees with NRC-approved transportation security plans may continue to use DSP–ISG–01, which the NRC has found acceptable for complying with 10 CFR part 95 regulations as long as the licensees do not change their NRC-approved transportation security plans.

This regulatory guide does not constitute backfitting as described above, would not constitute backfitting under any of the backfitting provisions in 10 CFR Chapter I, nor would it be regarded as backfitting under Commission and Executive Director for Operations guidance. In addition, issuance of the RG would not otherwise be inconsistent with the issue finality provisions in 10 CFR part 52. The staff's position is based upon the following considerations.

1. Part 95 applies to materials licensees and other entities transporting (or placing into transport) classified security information, and contains requirements governing such transport. Although some of these materials licensees are protected by backfitting or issue finality provisions in 10 CFR part 52, these backfitting and issue finality protections do not extend to the procedures governing transport of classified information. For example, under the definition of backfitting in 10 CFR 50.109(a)(1), protection is afforded to nuclear power plant licensees against changes in, or new requirements and guidance on, *inter alia,* ''procedures or organization required to . . . operate a facility.'' Procedures governing the transportation of materials off of the facility site cannot reasonably be viewed as constituting such facility operating procedures. The backfitting and issue finality provisions applicable to other materials licensees are written in an analogous fashion. Therefore, changes to the guidance on compliance with 10 CFR part 95—even if imposed on these materials licensees who are protected by backfitting or issue protection provisions in 10 CFR part 52 (see the discussion in item 2)—would not constitute backfitting or a violation of issue finality provisions under 10 CFR part 52.

2. Even if the NRC were to conclude that materials licensees are afforded backfitting protection with respect to procedures governing transportation of classified information, changes in guidance would not constitute backfitting as defined in the various NRC backfitting provisions unless imposed on materials licensees. As described earlier, the NRC staff does not intend to impose or apply the guidance in this RG to existing licensees who already have NRC-approved transportation security plans (the exception is where a licensee makes changes to or proposes to amend such plans; the backfitting and issue finality implications are discussed in item 3 below). Given this current lack of staff intention to impose the guidance in this RG, this would not constitute backfitting or a violation of issue finality provisions under 10 CFR part 52. If the staff seeks to impose a position in the RG 7.13 on holders of already issued licenses in a manner which constitutes backfitting or does not provide issue finality as described in the applicable issue finality provision then the staff must make the showing as set forth in the applicable backfitting provision or address the criteria for avoiding issue finality as described applicable issue finality provision.

3. A licensing basis change voluntarily initiated by a licensee is not considered to be backfitting. In such cases, the policy considerations underlying the NRC's backfitting provisions, *viz.* regulatory stability and predictability concerning the terms of an NRC approval, are not applicable where the licensee itself voluntarily seeks a change to its licensing basis. This rationale is reflected in a July 14, 2010, letter from the NRC General Counsel to NEI's General Counsel (ADAMS Accession No. ML101960180)

4. Even if the NRC were to conclude that materials licensees are afforded backfitting protection with respect to procedures governing transportation of classified information, applicants and potential/future applicants for such materials licenses are not, with certain exceptions not relevant here, protected under either the various NRC backfitting provisions or the issue finality provisions under 10 CFR part 52. This is because neither the backfitting provisions nor the issue finality provisions under 10 CFR part 52 were intended for every NRC action which substantially changes the expectations of current and future applicants.

Dated at Rockville, Maryland, this 3rd day of June, 2015.

For the Nuclear Regulatory Commission.

Harriet Karagiannis,

Acting Chief, Regulatory Guidance and Generic Issues Branch, Division of Engineering, Office of Nuclear Regulatory Research.

[FR Doc. 2015–14018 Filed 6–8–15; 8:45 am]

BILLING CODE 7590–01–P

NUCLEAR REGULATORY COMMISSION

[NRC–2015–0142]

Biweekly Notice: Applications and Amendments to Facility Operating Licenses and Combined Licenses Involving No Significant Hazards Considerations

AGENCY: Nuclear Regulatory Commission.

ACTION: Biweekly notice.

SUMMARY: Pursuant to Section 189a. (2) of the Atomic Energy Act of 1954, as amended (the Act), the U.S. Nuclear Regulatory Commission (NRC) is publishing this regular biweekly notice. The Act requires the Commission to publish notice of any amendments issued, or proposed to be issued and grants the Commission the authority to issue and make immediately effective any amendment to an operating license or combined license, as applicable, upon a determination by the Commission that such amendment involves no significant hazards consideration, notwithstanding the pendency before the Commission of a request for a hearing from any person.

This biweekly notice includes all notices of amendments issued, or proposed to be issued from May 13, 2015 to May 27, 2015. The last biweekly notice was published on May 26, 2015.

DATES: Comments must be filed by July 9, 2015. A request for a hearing must be filed by August 10, 2015.

ADDRESSES: You may submit comments by any of the following methods (unless this document describes a different method for submitting comments on a specific subject):

- Federal Rulemaking Web site: Go to *http://www.regulations.gov* and search for Docket ID NRC–2015–0142. Address questions about NRC dockets to Carol Gallagher; telephone: 301–415–3463; email: *Carol.Gallagher@nrc.gov*
- Mail comments to: Cindy Bladey, Office of Administration, Mail Stop: OWFN–12–H08, U.S. Nuclear Regulatory Commission, Washington, DC 20555–0001.

For additional direction on obtaining information and submitting comments, see ''Obtaining Information and Submitting Comments'' in the **SUPPLEMENTARY INFORMATION** section of this document.

FOR FURTHER INFORMATION CONTACT: Shirley Rohrer, Office of Nuclear Reactor Regulation, U.S. Nuclear Regulatory Commission, Washington, DC 20555–0001; telephone: 301–415–5411, email: *Shirley.Rohrer@nrc.gov.*

SUPPLEMENTARY INFORMATION:

I. Obtaining Information and Submitting Comments

A. Obtaining Information

Please refer to Docket ID NRC–2015–0142 when contacting the NRC about the availability of information for this action. You may obtain publicly-available information related to this action by any of the following methods:

- Federal rulemaking Web site: Go to *http://www.regulations.gov* and search for Docket ID NRC–2015–0142.
- NRC's Agencywide Documents Access and Management System (ADAMS): You may obtain publicly-available documents online in the ADAMS Public Documents collection at *http://www.nrc.gov/reading-rm/adams.html.* To begin the search, select ''*ADAMS Public Documents*'' and then select ''*Begin Web-based ADAMS Search.*'' For problems with ADAMS, please contact the NRC's Public Document Room (PDR) reference staff at 1–800–397–4209, 301–415–4737, or by email to *pdr.resource@nrc.gov.* The ADAMS accession number for each document referenced (if it is available in ADAMS) is provided the first time that it is mentioned in the **SUPPLEMENTARY INFORMATION** section.
- NRC's PDR: You may examine and purchase copies of public documents at the NRC's PDR, Room O1–F21, One White Flint North, 11555 Rockville Pike, Rockville, Maryland 20852.

B. Submitting Comments

Please include Docket ID NRC–2015–0142, facility name, unit number(s), application date, and subject in your comment submission.

The NRC cautions you not to include identifying or contact information that you do not want to be publicly disclosed in your comment submission. The NRC posts all comment submissions at *http://www.regulations.gov* as well as entering the comment submissions into ADAMS. The NRC does not routinely edit comment submissions to remove identifying or contact information.

If you are requesting or aggregating comments from other persons for submission to the NRC, then you should inform those persons not to include identifying or contact information that they do not want to be publicly disclosed in their comment submission. Your request should state that the NRC does not routinely edit comment submissions to remove such information before making the comment submissions available to the public or entering the comment submissions into ADAMS.

II. Notice of Consideration of Issuance of Amendments to Facility Operating Licenses and Combined Licenses and Proposed No Significant Hazards Consideration Determination

The Commission has made a proposed determination that the following amendment requests involve no significant hazards consideration. Under the Commission's regulations in § 50.92 of Title 10 of the *Code of Federal Regulations* (10 CFR), this means that operation of the facility in accordance with the proposed amendment would not (1) involve a significant increase in the probability or consequences of an accident previously evaluated, or (2) create the possibility of a new or different kind of accident from any accident previously evaluated; or (3) involve a significant reduction in a margin of safety. The basis for this proposed determination for each amendment request is shown below.

The Commission is seeking public comments on this proposed determination. Any comments received within 30 days after the date of publication of this notice will be considered in making any final determination.

Normally, the Commission will not issue the amendment until the expiration of 60 days after the date of publication of this notice. The Commission may issue the license amendment before expiration of the 60-day period provided that its final determination is that the amendment involves no significant hazards consideration. In addition, the Commission may issue the amendment prior to the expiration of the 30-day comment period should circumstances change during the 30-day comment period such that failure to act in a timely way would result, for example in derating or shutdown of the facility. Should the Commission take action prior to the expiration of either the comment period or the notice period, it will publish in the **Federal Register** a notice of issuance. Should the Commission make a final No Significant Hazards Consideration Determination, any hearing will take place after issuance. The Commission expects that the need to take this action will occur very infrequently.

A. Opportunity To Request a Hearing and Petition for Leave To Intervene

Within 60 days after the date of publication of this notice, any person(s) whose interest may be affected by this action may file a request for a hearing and a petition to intervene with respect to issuance of the amendment to the

subject facility operating license or combined license. Requests for a hearing and a petition for leave to intervene shall be filed in accordance with the Commission's ''Agency Rules of Practice and Procedure'' in 10 CFR part 2. Interested person(s) should consult a current copy of 10 CFR 2.309, which is available at the NRC's PDR, located at One White Flint North, Room O1–F21, 11555 Rockville Pike (first floor), Rockville, Maryland 20852. The NRC's regulations are accessible electronically from the NRC Library on the NRC's Web site at *http://www.nrc.gov/reading-rm/doc-collections/cfr/.* If a request for a hearing or petition for leave to intervene is filed by the above date, the Commission or a presiding officer designated by the Commission or by the Chief Administrative Judge of the Atomic Safety and Licensing Board Panel, will rule on the request and/or petition; and the Secretary or the Chief Administrative Judge of the Atomic Safety and Licensing Board will issue a notice of a hearing or an appropriate order.

As required by 10 CFR 2.309, a petition for leave to intervene shall set forth with particularity the interest of the petitioner in the proceeding, and how that interest may be affected by the results of the proceeding. The petition should specifically explain the reasons why intervention should be permitted with particular reference to the following general requirements: (1) The name, address, and telephone number of the requestor or petitioner; (2) the nature of the requestor's/petitioner's right under the Act to be made a party to the proceeding; (3) the nature and extent of the requestor's/petitioner's property, financial, or other interest in the proceeding; and (4) the possible effect of any decision or order which may be entered in the proceeding on the requestor's/petitioner's interest. The petition must also identify the specific contentions which the requestor/petitioner seeks to have litigated at the proceeding.

Each contention must consist of a specific statement of the issue of law or fact to be raised or controverted. In addition, the requestor/petitioner shall provide a brief explanation of the bases for the contention and a concise statement of the alleged facts or expert opinion which support the contention and on which the requestor/petitioner intends to rely in proving the contention at the hearing. The requestor/petitioner must also provide references to those specific sources and documents of which the petitioner is aware and on which the requestor/petitioner intends to rely to establish those facts or expert opinion. The petition must include sufficient information to show that a genuine dispute exists with the applicant on a material issue of law or fact. Contentions shall be limited to matters within the scope of the amendment under consideration. The contention must be one which, if proven, would entitle the requestor/petitioner to relief. A requestor/petitioner who fails to satisfy these requirements with respect to at least one contention will not be permitted to participate as a party.

Those permitted to intervene become parties to the proceeding, subject to any limitations in the order granting leave to intervene, and have the opportunity to participate fully in the conduct of the hearing.

If a hearing is requested, the Commission will make a final determination on the issue of no significant hazards consideration. The final determination will serve to decide when the hearing is held. If the final determination is that the amendment request involves no significant hazards consideration, the Commission may issue the amendment and make it immediately effective, notwithstanding the request for a hearing. Any hearing held would take place after issuance of the amendment. If the final determination is that the amendment request involves a significant hazards consideration, then any hearing held would take place before the issuance of any amendment unless the Commission finds an imminent danger to the health or safety of the public, in which case it will issue an appropriate order or rule under 10 CFR part 2.

B. Electronic Submissions (E-Filing)

All documents filed in NRC adjudicatory proceedings, including a request for hearing, a petition for leave to intervene, any motion or other document filed in the proceeding prior to the submission of a request for hearing or petition to intervene, and documents filed by interested governmental entities participating under 10 CFR 2.315(c), must be filed in accordance with the NRC's E-Filing rule (72 FR 49139; August 28, 2007). The E-Filing process requires participants to submit and serve all adjudicatory documents over the internet, or in some cases to mail copies on electronic storage media. Participants may not submit paper copies of their filings unless they seek an exemption in accordance with the procedures described below.

To comply with the procedural requirements of E-Filing, at least ten 10 days prior to the filing deadline, the participant should contact the Office of the Secretary by email at *hearing.docket@nrc.gov,* or by telephone at 301–415–1677, to request (1) a digital identification (ID) certificate, which allows the participant (or its counsel or representative) to digitally sign documents and access the E-Submittal server for any proceeding in which it is participating; and (2) advise the Secretary that the participant will be submitting a request or petition for hearing (even in instances in which the participant, or its counsel or representative, already holds an NRC-issued digital ID certificate). Based upon this information, the Secretary will establish an electronic docket for the hearing in this proceeding if the Secretary has not already established an electronic docket.

Information about applying for a digital ID certificate is available on the NRC's public Web site at *http://www.nrc.gov/site-help/e-submittals/getting-started.html.* System requirements for accessing the E-Submittal server are detailed in the NRC's ''Guidance for Electronic Submission,'' which is available on the agency's public Web site at *http://www.nrc.gov/site-help/e-submittals.html.* Participants may attempt to use other software not listed on the Web site, but should note that the NRC's E-Filing system does not support unlisted software, and the NRC Meta System Help Desk will not be able to offer assistance in using unlisted software.

If a participant is electronically submitting a document to the NRC in accordance with the E-Filing rule, the participant must file the document using the NRC's online, Web-based submission form. In order to serve documents through the Electronic Information Exchange System, users will be required to install a Web browser plug-in from the NRC's Web site. Further information on the Web-based submission form, including the installation of the Web browser plug-in, is available on the NRC's public Web site at *http://www.nrc.gov/site-help/e-submittals.html.*

Once a participant has obtained a digital ID certificate and a docket has been created, the participant can then submit a request for hearing or petition for leave to intervene. Submissions should be in Portable Document Format (PDF) in accordance with NRC guidance available on the NRC's public Web site at *http://www.nrc.gov/site-help/e-submittals.html.* A filing is considered complete at the time the documents are submitted through the NRC's E-Filing

system. To be timely, an electronic filing must be submitted to the E-Filing system no later than 11:59 p.m. Eastern Time on the due date. Upon receipt of a transmission, the E-Filing system time-stamps the document and sends the submitter an email notice confirming receipt of the document. The E-Filing system also distributes an email notice that provides access to the document to the NRC's Office of the General Counsel and any others who have advised the Office of the Secretary that they wish to participate in the proceeding, so that the filer need not serve the documents on those participants separately. Therefore, applicants and other participants (or their counsel or representative) must apply for and receive a digital ID certificate before a hearing request/petition to intervene is filed so that they can obtain access to the document via the E-Filing system.

A person filing electronically using the NRC's adjudicatory E-Filing system may seek assistance by contacting the NRC Meta System Help Desk through the ''Contact Us'' link located on the NRC's public Web site at *http://www.nrc.gov/site-help/e-submittals.html,* by email to *MSHD.Resource@nrc.gov,* or by a toll-free call at 1–866–672–7640. The NRC Meta System Help Desk is available between 8 a.m. and 8 p.m., Eastern Time, Monday through Friday, excluding government holidays.

Participants who believe that they have a good cause for not submitting documents electronically must file an exemption request, in accordance with 10 CFR 2.302(g), with their initial paper filing requesting authorization to continue to submit documents in paper format. Such filings must be submitted by: (1) First class mail addressed to the Office of the Secretary of the Commission, U.S. Nuclear Regulatory Commission, Washington, DC 20555–0001, Attention: Rulemaking and Adjudications Staff; or (2) courier, express mail, or expedited delivery service to the Office of the Secretary, Sixteenth Floor, One White Flint North, 11555 Rockville Pike, Rockville, Maryland, 20852, Attention: Rulemaking and Adjudications Staff. Participants filing a document in this manner are responsible for serving the document on all other participants. Filing is considered complete by first-class mail as of the time of deposit in the mail, or by courier, express mail, or expedited delivery service upon depositing the document with the provider of the service. A presiding officer, having granted an exemption request from using E-Filing, may require a participant or party to use E-Filing if the presiding officer subsequently determines that the reason for granting the exemption from use of E-Filing no longer exists.

Documents submitted in adjudicatory proceedings will appear in the NRC's electronic hearing docket which is available to the public at *http://ehd1.nrc.gov/ehd/,* unless excluded pursuant to an order of the Commission, or the presiding officer. Participants are requested not to include personal privacy information, such as social security numbers, home addresses, or home phone numbers in their filings, unless an NRC regulation or other law requires submission of such information. However, in some instances, a request to intervene will require including information on local residence in order to demonstrate a proximity assertion of interest in the proceeding. With respect to copyrighted works, except for limited excerpts that serve the purpose of the adjudicatory filings and would constitute a Fair Use application, participants are requested not to include copyrighted materials in their submission.

Petitions for leave to intervene must be filed no later than 60 days from the date of publication of this notice. Requests for hearing, petitions for leave to intervene, and motions for leave to file new or amended contentions that are filed after the 60-day deadline will not be entertained absent a determination by the presiding officer that the filing demonstrates good cause by satisfying the three factors in 10 CFR 2.309(c)(1)(i)–(iii).

For further details with respect to these license amendment applications, see the application for amendment which is available for public inspection in ADAMS and at the NRC's PDR. For additional direction on accessing information related to this document, see the ''Obtaining Information and Submitting Comments'' section of this document.

Dominion Nuclear Connecticut, Inc., (DNC), Docket No. 50–336, Millstone Power Station, Unit 2 (MPS2), New London County, Connecticut

Date of amendment request: October 31, 2014. A publicly-available version is in ADAMS under Accession No. ML14310A187.

Description of amendment request: The amendment would revise the MPS2 Final Safety Analysis Report (FSAR) to allow the use of the encoded ultrasonic examination technique in lieu of the FSAR committed additional radiography examination for certain piping welds fabricated to ANSI [American National Standards Institute] B31.1.0. The amendment would also revise the MPS2 Facility Operating License No. DPR–65.

Basis for proposed no significant hazards consideration determination: As required by 10 CFR 50.91(a), the licensee has provided its analysis of the issue of no significant hazards consideration, which is presented below:

Criterion 1:

Does the proposed amendment involve a significant increase in the probability or consequences of an accident previously evaluated?

Response: No.

Previously evaluated accident consequences are not impacted by the proposed amendment because credited mitigating equipment continues to perform its design function. The proposed amendment does not significantly impact the probability of an accident previously evaluated because those Systems, Structures and Components (SSCs) that can initiate an accident are not significantly impacted.

Based on the above, DNC concludes that the proposed amendment to the MPS2 FSAR to allow the use of UT [ultrasonic] in lieu of RT [radiography] examination for certain piping welds fabricated to ANSI B31.1.0, does not involve a significant increase in the probability or consequences of an accident or transient previously evaluated in the safety analysis report.

Criterion 2:

Does the proposed amendment create the possibility for a new or different kind of accident from any accident previously evaluated?

Response: No.

The proposed amendment does not create a new or different kind of accident from any accident previously evaluated because previously credited SSCs are not significantly impacted. The proposed amendment does not involve a physical alteration of the plant and no new or different types of equipment will be installed. There is no impact upon the existing failure modes and effects analysis; and conformance to the single failure criterion is maintained.

Based on the above, DNC concludes that the proposed amendment to the MPS2 FSAR to allow the use of UT in lieu of RT examination for certain piping welds fabricated to ANSI B31.1.0, does not create the possibility of a new or different kind of accident or transient from any previously evaluated.

Criterion 3:

Does the proposed amendment involve a significant reduction in the margin of safety?

Response: No.

The proposed amendment to the MPS2 FSAR will not cause an accident to occur and will not result in any change in the operation of the associated accident mitigation equipment. The proposed amendment does not involve a significant reduction in margin of safety because plant response to any transient or analyzed accident event is unchanged.

Based on the above, DNC concludes the proposed amendment to the MPS2 FSAR to allow the use of UT in lieu of RT examination for certain piping welds fabricated to ANSI B31.1.0, does not involve a significant reduction in the margin of safety.

The NRC staff has reviewed the licensee's analysis and, based on this review, it appears that the three standards of 10 CFR 50.92(c) are satisfied. Therefore, the NRC staff proposes to determine that the amendment request involves no significant hazards consideration.

Attorney for licensee: Lillian M. Cuoco, Senior Counsel, Dominion Resources Services, Inc., 120 Tredegar Street, RS–2, Richmond, VA 23219.

Acting NRC Branch Chief: Michael I. Dudek.

Duke Energy Carolinas, LLC, Docket Nos. 50–369 and 50–370, McGuire Nuclear Station, Units 1 and 2, Mecklenburg County, North Carolina

Date of amendment request: March 23, 2015. A publicly-available version is in ADAMS under Accession No. ML15099A393.

Description of amendment request: The amendments would modify the definition of RATED THERMAL POWER and delete a footnote that allowed for stagered implementation of the previously approved Measurement Uncertainty Recapture Power Uprate.

Basis for proposed no significant hazards consideration determination: As required by 10 CFR 50.91(a), the licensee has provided its analysis of the issue of no significant hazards consideration, which is presented below:

Criterion 1:

Does the proposed amendment involve a significant increase in the probability or consequences of an accident previously evaluated?

Response: No.

This LAR [license amendment request] proposes administrative non-technical changes only. These proposed changes do not adversely affect accident initiators or precursors nor alter the design assumptions, conditions, or configurations of the facility. The proposed changes do not alter or prevent the ability of structures, systems[,] and components (SSCs) to perform their intended function to mitigate the consequences of an initiating event witin the assumed acceptance limits.

Given the above discussion, it is concluded the proposed amendment does not significantly increase the probability or consequences of an accident previously evaluated.

Criterion 2:

Does the proposed amendment create the possibility of a new or different kind of accident from any accident previously evaluated?

Response: No.

The LAR proposes administrative non-technical changes only. The proposed changes will not alter the design requirements of any SSC or its function during accident conditions. No new or different accidents result from the changes proposed. The changes do not involve a physical alteration of the plant or any changes in methods governing normal plant operation. The changes do not alter assumptions made in the safety analysis.

Given the above discussion, it is concluded the proposed amendment does not create the possibility of a new or different kind of accident from any accident previously evaluated.

Criterion 3:

Does the proposed amendment involve a significant reduction in the margin of safety?

Response: No.

This LAR proposes administrative non-technical changes only. The proposed changes do not alter the manner in which safety limits, limiting safety system settings or limiting conditions for operation are determined. The safety analysis acceptance criteria are not affected by these changes. The proposed changes will not result in plant operation in a configuration outside the design basis. The proposed changes do not adversely affect systems that respond to safely shutdown the plant and to maintain the plant in a safe shutdown condition.

Given the above discussion, it is concluded [that] the proposed amendment does not involve a significant reduction in the margin of safety.

The NRC staff has reviewed the licensee's analysis and, based on this review, it appears that the three standards of 10 CFR 50.92(c) are satisfied. Therefore, the NRC staff proposes to determine that the amendment request involves no significant hazards consideration.

Attorney for licensee: Lara S. Nichols, Associate General Counsel, Duke Energy Corporation, 526 South Church Street—EC07H, Charlotte, NC 28202.

NRC Branch Chief: Robert J. Pascarelli.

NextEra Energy Point Beach, LLC, Docket Nos. 50–266 and 50–301, Point Beach Nuclear Plant, Units 1 and 2, Town of Two Creeks, Manitowac County, Wisconsin

Date of amendment request: March 27, 2015. A publicly-available version is in ADAMS under Accession No. ML15086A378.

Description of amendment request: The proposed amendment would modify the technical specifications (TS) requirements regarding steam generator tube inspections and reporting as described in TS Task Force (TSTF) traveler TSTF–510, Revision 2, ''Revision to Steam Generator Program Inspection Frequencies and Tube Sample Selection.''

Basis for proposed no significant hazards consideration determination: As required by 10 CFR 50.91(a), the licensee has provided its analysis of the issue of no significant hazards consideration, which is provided below:

1. Does the proposed change involve a significant increase in the probability or consequences of any accident previously evaluated?

Response: No.

The proposed change revises the Steam Generator (SG) Program to modify the frequency of verification of SG tube integrity and SG tube sample selection. A steam generator tube rupture (SGTR) event is one of the design basis accidents that are analyzed as part of a plant's licensing basis. The proposed SG tube inspection frequency and sample selection criteria will continue to ensure that the SG tubes are inspected such that the probability of a SGTR is not increased. The consequences of a SGTR are bounded by the conservative assumptions in the design basis accident analysis. The proposed change will not cause the consequences of a SGTR to exceed those assumptions.

Therefore, it is concluded that this change does not involve a significant increase in the probability or consequences of an accident previously evaluated.

2. Does the proposed change create the possibility of a new or different kind of accident from any previously evaluated?

Response: No.

The proposed changes to the Steam Generator Program will not introduce any adverse changes to the plant design basis or postulated accidents resulting from potential tube degradation. The proposed change does not affect the design of the SGs or their method of operation. In addition, the proposed change does not impact any other plant system or component.

Therefore, it is concluded that this change does not create the possibility of a new or different kind of accident from any accident previously evaluated.

3. Does the proposed change involve a significant reduction in the margin of safety?

Response: No.

The SG tubes in pressurized water reactors are an integral part of the reactor coolant pressure boundary and, as such, are relied upon to maintain the primary system's pressure and inventory. As part of the reactor coolant pressure boundary, the SG tubes are unique in that they are also relied upon as a heat transfer surface between the primary and secondary systems such that residual heat can be removed from the primary system. In addition, the SG tubes also isolate the radioactive fission products in the primary coolant from the secondary system. In summary, the safety function of a SG is maintained by ensuring the integrity of its tubes.

Steam generator tube integrity is a function of the design, environment, and the physical condition of the tube. The proposed change does not affect tube design or operating environment. The proposed change will continue to require monitoring of the physical condition of the SG tubes such that there will not be a reduction in the margin of safety compared to the current requirements.

Therefore, it is concluded that the proposed change does not involve a significant reduction in a margin of safety.

The NRC staff has reviewed the licensee's analysis and, based on this review, it appears that the three standards of 10 CFR 50.92(c) are satisfied. Therefore, the NRC staff proposes to determine that the amendment request involves no significant hazards consideration.

Attorney for licensee: William Blair, Managing Attorney—Nuclear, Florida Power & Light Company, P.O. Box 14000, 700 Universe Boulevard, Juno Beach, FL 33408–0420.

NRC Branch Chief: David L. Pelton.

Pacific Gas and Electric Company, Docket Nos. 50–275 and 50–323, Diablo Canyon Nuclear Power Plant, Units 1 and 2, San Luis Obispo County, California

Date of amendment request: April 16, 2015. A publicly-available version is in ADAMS under Accession No. ML15107A333.

Description of amendment request: The amendments propose to revise the Best Estimate Analyzer for the Core Operations-Nuclear (BEACON) power distribution monitoring system methodology described in the Updated Final Safety Analysis Report (UFSAR) Section 4.3.2.2, ''Power Distribution,'' to the method described in the Westinghouse Electric Company LLC proprietary topical report (TR) WCAP–12472–P–A, Addendum 4, ''BEACON Core Monitoring and Operation Support System.'' These amendments also propose to revise Technical Specification (TS) 5.6.5, ''CORE OPERATING LIMITS REPORT (COLR),'' Section b to replace Westinghouse proprietary TR WCAP–11596–P–A, ''Qualification of the PHOENIX–P/ANC Nuclear Design System for Pressurized Water Reactor Cores,'' with NRC-approved proprietary TR WCAP–16045–P–A, ''Qualification of the Two-Dimensional Transport Code PARAGON,'' and NRC-approved proprietary TR WCAP–16045–P–A, Addendum 1–A, ''Qualification of the NEXUS Nuclear Data Methodology.''

Basis for proposed no significant hazards consideration determination: As required by 10 CFR 50.91(a), the licensee has provided its analysis of the issue of no significant hazards consideration, which is presented below:

1. Does the proposed change involve a significant increase in the probability or consequences of an accident previously evaluated?

Response: No.

The proposed change would revise the Updated Final Safety Analysis Report (UFSAR) to allow the use of the BEACON code methodology contained in the NRC-approved WCAP–12472–P–A, Addendum 4, Revision 0, instead of the BEACON methodology contained in NRC-approved WCAP–12472–P–A, Addendum 1–A. In addition, the proposed change would revise Technical Specification (TS) 5.6.5, ''CORE OPERATING LIMITS REPORT (COLR),'' Section b to replace WCAP–11596–P–A, ''Qualification of the Phoenix-P/ANC Nuclear Design System for Pressurized Water Reactor Cores,'' with NRC-approved WCAP–16045–P–A, ''Qualification of the Two-Dimensional Transport Code PARAGON,'' and NRC-approved WCAP–16045–P–A, Addendum 1–A, ''Qualification of the NEXUS Nuclear Data Methodology,'' in the list of NRC-approved analytical limits used to determine core operating limits[,] [s]pecifically the limit for refueling boron concentration (*i.e.,* the shutdown margin) required by TS 3.9.1, ''Boron Concentration.''

The changes to the BEACON system and TS 5.6.5 core operating limits methodologies, which this license amendment proposes, are improvements over the current methodologies in use at the Diablo Canyon Power Plant (DCPP). The NRC staff reviewed and approved these methodologies and concluded that these analytical methods are acceptable as a replacement for the current analytical methods. Thus the BEACON system operation to perform power distribution calculations and the core operating limits determined using the proposed analytical methods will continue to assure that the plant operates in a safe manner and, thus, the proposed changes do not involve an increase in the probability of an accident.

The BEACON system power distribution calculations and the core operating limits determined by use of the proposed new methodologies will not increase the reactor power level or the core fission product inventory, and will not change any transport assumptions or the shutdown margin requirements of the TS. In addition, the proposed changes will not alter any accident analyses assumptions discussed in the UFSAR. As such, the DCPP will continue to operate within the power distribution limits and shutdown margins required by the plant TS and within the assumptions of the safety analyses described in the UFSAR. As such, the proposed changes do not involve a significant increase in the consequences of an accident.

Therefore, the proposed change does not involve a significant increase in the probability or consequences of an accident previously evaluated.

2. Does the proposed change create the possibility of a new or different accident from any accident previously evaluated?

Response: No.

The proposed change involves the use of new and NRC-approved methodologies used by the BEACON System to perform core power distribution calculations and in TS 5.6.5, ''CORE OPERATING LIMITS REPORT (COLR),'' to determine core operating limits (*i.e.,* refueling boron concentration or shutdown margin requirement).

The proposed change provides revised analytical methods for the BEACON system and determining core operating limit for refueling boron concentration, and does not change any system functions or maintenance activities. The change does not involve physical alteration of the plant, that is, no new or different type of equipment will be installed. The change does not alter assumptions made in the safety analyses and continues to assure the plant is operated within safe limits. This change does not create new failure modes or mechanisms that are not identifiable during testing, and no new accident precursors are generated.

The BEACON system is not used to control the performance of any plant equipment. The BEACON system core power distribution calculations and core operating limits developed using the new methodologies will be determined using NRC-approved methodologies, and will remain consistent with all applicable plant safety analysis limits addressed in the DCPP UFSAR and the shutdown margin requirements of the TS. As such, use of the new BEACON and COLR methodologies will not cause a new or different accident.

Therefore, the proposed change does not create the possibility of a new or different accident from any accident previously evaluated.

3. Does the proposed change involve a significant reduction in a margin of safety?

Response: No.

The margin of safety is established through equipment design, operating parameters, and the setpoints at which automatic actions are initiated. The proposed changes do not physically alter safety-related systems, nor does it affect the way in which safety related systems perform their functions. The setpoints at which protective actions are initiated are not altered by the proposed changes. Therefore, sufficient equipment remains available to actuate upon demand for the purpose of mitigating an analyzed event. The proposed methodology changes are an improvement that will allow more accurate modeling of core performance and determination of the required refueling boron concentration. The NRC has reviewed and approved these methodologies for their intended use in lieu of the current methodologies; thus, the margin of safety is not reduced due to this change.

Therefore, the proposed change does not involve a significant reduction in a margin of safety.

The NRC staff has reviewed the licensee's analysis and, based on this review, it appears that the three standards of 10 CFR 50.92(c) are satisfied. Therefore, the NRC staff proposes to determine that the amendment requests involve no significant hazards consideration.

Attorney for licensee: Jennifer Post, Esq., Pacific Gas and Electric Company, P.O. Box 7442, San Francisco, California 94120.

NRC Branch Chief: Michael T. Markley.

Southern Nuclear Operating Company, Inc., Docket Nos. 52–025 and 52–026, Vogtle Electric Generating Plant (VEGP) Units 3 and 4, Burke County, Georgia

Date of amendment request: May 26, 2015. A publically-available version is in ADAMS under Accession No. ML15146A444.

Description of amendment request: The proposed change would amend Combined License Nos. NPF–91 and NPF–92 for the VEGP Units 3 and 4. The requested amendment proposes to depart from Tier 2* and associated Tier 2 information in the VEGP Units 3 and 4 Updated Final Safety Analysis Report (UFSAR) (which includes the plant specific Design Control Document Tier 2 information) to revise the application of American Institute for Steel Construction (AISC) N690–1994, Specification for the Design, Fabrication and Erection of Steel Safety Related Structures for Nuclear Facilities, to allow use of American Welding Society (AWS) D1.1–2000, Structural Welding Code-Steel, in lieu of the AWS D1.1–1992 edition identified in AISC N690–1994.

Basis for proposed no significant hazards consideration determination: As required by 10 CFR 50.91(a), the licensee has provided its analysis of the issue of no significant hazards consideration, which is presented below:

1. Does the proposed amendment involve a significant increase in the probability or consequences of an accident previously evaluated?

Response: No.

The design functions of the nuclear island structures are to provide support, protection, and separation for the seismic Category I mechanical and electrical equipment located in the nuclear island. The nuclear island structures are structurally designed to meet seismic Category I requirements as defined in Regulatory Guide 1.29. The design functions of the seismic Category II portions of the annex building and turbine building are to provide integrity for non-seismic items located in the proximity of safety-related items, the failure of which during a safe shutdown earthquake could result in loss of function of safety-related items.

The use of AWS D1.1–2000 provides criteria for the design, qualification, fabrication, and inspection of welds for nuclear island structures and seismic Category II portions of the annex building and turbine building. These structures continue to meet the applicable portions of ACI [American Concrete Institute] 349, the remaining applicable portions of AISC N690 not related to requirements for welding, including the supplemental requirements described in UFSAR Subsections 3.8.4.4.1 and 3.8.4.5, and the supplemental requirements identified in the UFSAR Subsection 3.8.3 for structural modules. The use of AWS D1.1–2000 does not have an adverse impact on the response of the nuclear island structures, or seismic Category II portions of the annex building and turbine building to safe shutdown earthquake ground motions or loads due to anticipated transients or postulated accident conditions. The change does not impact the support, design, or operation of mechanical and fluid systems. There is no change to plant systems or the response of systems to postulated accident conditions. There is no change to the predicted radioactive releases due to normal operation or postulated accident conditions. The plant response to previously evaluated accidents or external events is not adversely affected, nor does the change described create any new accident precursors.

Therefore, the proposed amendment does not involve a significant increase in the probability or consequences of an accident previously evaluated.

2. Does the proposed amendment create the possibility of a new or different kind of accident from any accident previously evaluated?

Response: No.

The proposed change includes the use of AWS D1.1–2000 to provide criteria for the design, qualification, fabrication, and inspection of welds for nuclear island structures and the seismic Category II portions of the annex building and turbine building. The proposed change provides a consistent set of requirements for welding of structures required to be designed to the requirements of ACI 349 and AISC N690. The change to the details does not change the design function, support, design, or operation of mechanical and fluid systems. The change to the weld details does not result in a new failure mechanism for the pertinent structures or new accident precursors. As a result, the design function of the structures is not adversely affected by the proposed change.

Therefore, the proposed amendment does not create the possibility of a new or different kind of accident from any accident previously evaluated.

3. Does the proposed amendment involve a significant reduction in a margin of safety?

Response: No.

The AWS D1.1–2000 code is a consensus standard written, revised, and approved by industry experts experienced in welding and weld design. The proposed change adds AWS D1.1–2000 to the list of applicable codes and standards in the UFSAR. The 2000 edition includes criteria that consider directionality in the weld which allows for an increase factor on structural fillet weld strength relative to the angle of load direction. These changes are supported by tests that provide the justification for criteria that consider the directionality. The testing and analysis is reported in an AISC Journal Article, *''Proposed Working Stresses for Fillet Welds in Building Construction,''* by T. R. Higgins and FR Preece. These changes can be similarly applied to welds in the AP1000 to continue to provide the necessary safety margin. Therefore, the proposed amendment does not involve a significant reduction in a margin of safety.

The NRC staff has reviewed the licensee's analysis and, based on this review, it appears that the three standards of 10 CFR 50.92(c) are satisfied. Therefore, the NRC staff proposes to determine that the amendment request involves no significant hazards consideration.

Attorney for licensee: M. Stanford Blanton, Balch & Bingham LLP, 1710 Sixth Avenue North, Birmingham, AL 35203–2015.

NRC Branch Chief: Lawrence J. Burkhart.

Tennessee Valley Authority, Docket No. 50–259, Browns Ferry Nuclear Plant, Unit 1, Limestone County, Alabama

Date of amendment request: March 9, 2015. A publicly-available version is in ADAMS under Accession No. ML15111A396.

Description of amendment request: The amendment would revise the Technical Specifications (TS) Section 3.1.4, ''Control Rod Scram Times,'' based on industry Technical Specifications Task Force (TSTF) Change Traveler TSTF–460–A, Revision 0, that has been approved (August 23, 2004; 69 FR 51864) generically for the boiling water reactor (BWR) Standard Technical Specifications, NUREG–1433 (BWR/4). The required frequency of Surveillance Requirement 3.1.4.2 regarding control rod scram time testing will be changed from ''120 days cumulative operation in MODE 1'' to ''200 days cumulative operation in MODE 1.'' The 200-day frequency is based on operating experience that has shown control rod scram times do not significantly change over an operating cycle.

Basis for proposed no significant hazards consideration determination: As required by 10 CFR 50.91(a), the licensee has provided its analysis of the issue of no significant hazards consideration (NSHC) by adopting the NSHC that the NRC published on August 23, 2004 (69 FR 51854), which is presented below:

1. Does the change involve a significant increase in the probability or consequences of an accident previously evaluated?

Response: No.

The proposed change extends the frequency for testing control rod scram time testing from every 120 days of cumulative Mode 1 operation to 200 days of cumulative Mode 1 operation. The frequency of surveillance testing is not an initiator of any accident previously evaluated. The frequency of surveillance testing does not affect the ability to mitigate any accident previously evaluated, as the tested component is still required to be operable.

Therefore, the proposed change does not involve a significant increase in the

probability or consequences of an accident previously evaluated.

2. Does the change create the possibility of a new or different kind of accident from any accident previously evaluated?

Response: No.

The proposed change extends the frequency for testing control rod scram time testing from every 120 days of cumulative Mode 1 operation to 200 days of cumulative Mode 1 operation. The proposed change does not result in any new or different modes of plant operation.

Therefore, the proposed change does not create the possibility of a new or different kind of accident from any previously evaluated.

3. Does the proposed change involve a significant reduction in a margin of safety?

Response: No.

The proposed change extends the frequency for testing control rod scram time testing from every 120 days of cumulative Mode 1 operation to 200 days of cumulative Mode 1 operation. The proposed change continues to test the control rod scram time to ensure the assumptions in the safety analysis are protected.

Therefore, the proposed change does not involve a significant reduction in a margin of safety.

The NRC staff has reviewed the licensee's analysis and, based on its own analysis, determines that the three standards of 10 CFR 50.92(c) are satisfied. Therefore, the NRC staff proposes to determine that the amendment request involves no significant hazards consideration.

Attorney for licensee: General Counsel, Tennessee Valley Authority, 400 West Summit Hill Drive, 6A West Tower, Knoxville, TN 37902.

NRC Branch Chief: Shana R. Helton.

Union Electric Company, Docket No. 50–483, Callaway Plant, Unit 1, Callaway County, Missouri

Date of amendment request: March 12, 2015. A publicly-available version is in ADAMS under Accession No. ML15071A403.

Description of amendment request: The proposed amendment would modify Technical Specification (TS) requirements in order to address NRC Generic Letter 2008–01, ''Managing Gas Accumulation in Emergency Core Cooling, Decay Heat Removal, and Containment Spray Systems,'' dated January 11, 2008 (ADAMS Accession No. ML072910759), as described in TS Task Force (TSTF) traveler TSTF–523–A, Revision 2, ''Generic Letter 2008–01, Managing Gas Accumulation'' (ADAMS Accession No. ML13053A075).

Basis for proposed no significant hazards consideration determination: As required by 10 CFR 50.91(a), the licensee has provided its analysis of the issue of no significant hazards consideration, which is presented below:

1. Does the proposed change involve a significant increase in the probability or consequences of an accident previously evaluated?

Response: No.

The proposed change revises or adds Surveillance Requirements (SRs) that require verification that the Emergency Core Cooling System (ECCS), the Residual Heat Removal (RHR) System, and the Containment Spray (CS) System, are not rendered inoperable due to accumulated gas and to provide allowances that permit performance of the verification. Gas accumulation in the subject systems is not an initiator of any accident previously evaluated. As a result, the probability of any accident previously evaluated is not significantly increased. The proposed SRs ensure that the subject systems continue to be capable to perform their assumed safety function and are not rendered inoperable due to gas accumulation. Thus, the consequences of any accident previously evaluated are not significantly increased.

Based on the above, the proposed change does not involve a significant increase in the probability or consequences of an accident previously evaluated.

2. Does the proposed change create the possibility of a new or different kind of accident from any accident previously evaluated?

Response: No.

The proposed change revises or adds SRs that require verification that the ECCS, the RHR System, and the CS System are not rendered inoperable due to accumulated gas and to provide allowances that permit performance of the revised verification. The proposed change does not involve a physical alteration of the plant (*i.e.,* no new or different type of equipment will be installed) or a change in the methods governing normal plant operation. In addition, the proposed change does not impose any new or different requirements that could initiate an accident. The proposed change does not alter assumptions made in the safety analysis and is consistent with the safety analysis assumptions.

Therefore, the proposed change does not create the possibility of a new or different kind of accident from any accident previously evaluated.

3. Does the proposed change involve a significant reduction in a margin of safety?

Response: No.

The proposed change revises or adds SRs that require verification that the ECCS, the RHR System, and the CS System are not rendered inoperable due to accumulated gas and to provide allowances which permit performance of the revised verification. The proposed change adds new requirements to manage gas accumulation in order to ensure the subject systems are capable of performing their assumed safety functions. The proposed SRs are more comprehensive than the current SRs and will ensure that the assumptions of the safety analysis are protected. The proposed change does not adversely affect any current plant safety margins or the reliability of the equipment assumed in the safety analysis. Therefore, there are no changes being made to any safety analysis assumptions, safety limits, or limiting safety system settings that would adversely affect plant safety as a result of the proposed change.

Therefore, the proposed change does not involve a significant reduction in a margin of safety.

The NRC staff has reviewed the licensee's analysis and, based on this review, it appears that the three standards of 10 CFR 50.92(c) are satisfied. Therefore, the NRC staff proposes to determine that the amendment request involves no significant hazards consideration.

Attorney for licensee: John O'Neill, Esq., Pillsbury Winthrop Shaw Pittman LLP, 2300 N Street NW., Washington, DC 20037.

NRC Branch Chief: Michael T. Markley.

Union Electric Company, Docket No. 50–483, Callaway Plant, Unit 1, Callaway County, Missouri

Date of amendment request: March 9, 2015, as supplemented by letter dated April 8, 2015. Publicly-available versions are in ADAMS under Accession Nos. ML15068A422 and ML15098A575.

Description of amendment request: The proposed amendment would modify Technical Specification (TS) requirements regarding steam generator tube inspections and reporting as described in TS Task Force (TSTF) traveler TSTF–510, Revision 2, ''Revision to Steam Generator Program Inspection Frequencies and Tube Sample Selection'' (ADAMS Accession No. ML110610350), with some minor administrative differences.

Basis for proposed no significant hazards consideration determination: As required by 10 CFR 50.91(a), the licensee has provided its analysis of the issue of no significant hazards consideration, which is presented below:

1. Does the proposed change involve a significant increase in the probability or consequences of an accident previously evaluated?

Response: No.

The proposed change revises the Steam Generator (SG) Program to modify the frequency of verification of SG tube integrity and SG tube sample selection. A steam generator tube rupture (SGTR) event is one of the design basis accidents that are analyzed as part of the plant's licensing basis. The proposed SG tube inspection frequency and sample selection criteria will continue to ensure that the SG tubes are inspected such that the probability of [an] SGTR is not increased. The consequences of [an] SGTR are bounded by the conservative assumptions in the design basis accident analysis. The proposed change will not cause the

consequences of [an] SGTR to exceed those assumptions.

Therefore, it is concluded that this change does not involve a significant increase in the probability or consequences of an accident previously evaluated.

2. Does the proposed change create the possibility of a new or different kind of accident from any accident previously evaluated?

Response: No.

The proposed changes to the Steam Generator Program will not introduce any adverse changes to the plant design basis or postulated accidents resulting from potential tube degradation. The proposed change does not affect the design of the SGs or their method of operation. In addition, the proposed change does not impact any other plant system or component.

Therefore, it is concluded that this change does not create the possibility of a new or different kind of accident from any accident previously evaluated.

3. Does the proposed change involve a significant reduction in a margin of safety?

Response: No.

The SG tubes in pressurized water reactors are an integral part of the reactor coolant pressure boundary and, as such, are relied upon to maintain the primary system's pressure and inventory. As part of the reactor coolant pressure boundary, the SG tubes are unique in that they are also relied upon as a heat transfer surface between the primary and secondary systems such that residual heat can be removed from the primary system. In addition, the SG tubes also isolate the radioactive fission products in the primary coolant from the secondary system. These safety functions are maintained by ensuring integrity of the SG tubes.

Steam generator tube integrity is a function of the design, environment, and the physical condition of the tube. The proposed change does not affect tube design or operating environment. The proposed change will continue to require monitoring of the physical condition of the SG tubes such that there will not be a reduction in the margin of safety compared to the current requirements.

Therefore, it is concluded that the proposed change does not involve a significant reduction in a margin of safety.

The NRC staff has reviewed the licensee' analysis and, based on this review, it appears that the three standards of 10 CFR 50.92(c) are satisfied. Therefore, the NRC staff proposes to determine that the amendment request involves no significant hazards consideration.

Attorney for licensee: John O'Neill, Esq., Pillsbury Winthrop Shaw Pittman LLP, 2300 N Street, NW., Washington, DC 20037.

NRC Branch Chief: Michael T. Markley.

III. Notice of Issuance of Amendments to Facility Operating Licenses and Combined Licenses

During the period since publication of the last biweekly notice, the Commission has issued the following amendments. The Commission has determined for each of these amendments that the application complies with the standards and requirements of the Atomic Energy Act of 1954, as amended (the Act), and the Commission's rules and regulations. The Commission has made appropriate findings as required by the Act and the Commission's rules and regulations in 10 CFR Chapter I, which are set forth in the license amendment.

A notice of consideration of issuance of amendment to facility operating license or combined license, as applicable, proposed no significant hazards consideration determination, and opportunity for a hearing in connection with these actions, was published in the **Federal Register** as indicated.

Unless otherwise indicated, the Commission has determined that these amendments satisfy the criteria for categorical exclusion in accordance with 10 CFR 51.22. Therefore, pursuant to 10 CFR 51.22(b), no environmental impact statement or environmental assessment need be prepared for these amendments. If the Commission has prepared an environmental assessment under the special circumstances provision in 10 CFR 51.22(b) and has made a determination based on that assessment, it is so indicated.

For further details with respect to the action see (1) the applications for amendment, (2) the amendment, and (3) the Commission's related letter, Safety Evaluation and/or Environmental Assessment as indicated. All of these items can be accessed as described in the ''Obtaining Information and Submitting Comments'' section of this document.

Dominion Nuclear Connecticut, Inc., Docket No. 50–336, Millstone Power Station, Unit 2 (MPS2), New London County, Connecticut

Date of amendment request: April 11, 2014.

Brief description of amendment: The amendment revised the Technical Specifications (TSs), adding topical report BAW–10240(P)(A), ''Incorporation of M5™ Properties in Framatome ANP Approved Methods,'' to the referenced analytical methods in TS 6.9.1.8.b, ''Core Operating Limits Report,'' as an acceptable method used to determine core operating limits for MPS2.

Date of issuance: May 18, 2015.

Effective date: As of the date of issuance and shall be implemented within 60 days from the date of issuance.

Amendment No.: 319. A publicly-available version is in ADAMS under Accession No. ML15093A441; documents related to this amendment are listed in the Safety Evaluation enclosed with the amendment.

Renewed Facility Operating License No. DPR–65: Amendment revised the Renewed Facility Operating License and TSs.

*Date of initial notice in **Federal Register**:* November 25, 2014 (79 FR 70212).

The Commission's related evaluation of the amendment is contained in a Safety Evaluation dated May 18, 2015.

No significant hazards consideration comments received: No.

Dominion Nuclear Connecticut, Inc., Docket No. 50–336, Millstone Power Station, Unit 2, New London County, Connecticut

Date of amendment request: March 28, 2014.

Brief description of amendment: The proposed amendment deletes the Technical Specification (TS) Index and makes several other editorial, corrective and minor changes to the TSs.

Date of issuance: May 20, 2015.

Effective date: As of the date of issuance and shall be implemented within 30 days from the date of issuance.

Amendment No.: 320. A publicly-available version is in ADAMS under Accession No. ML14093A027; documents related to this amendment are listed in the Safety Evaluation enclosed with the amendment.

Renewed Facility Operating License No. DPR–65: Amendment revised the Renewed Operating License and TSs.

*Date of initial notice in **Federal Register**:* November 25, 2014 (79 FR 70212).

The Commission's related evaluation of the amendment is contained in a Safety Evaluation dated May 20, 2015.

No significant hazards consideration comments received: No.

Dominion Nuclear Connecticut, Inc., Docket No. 50–423, Millstone Power Station, Unit 3, New London County, Connecticut

Date of amendment request: March 28, 2014.

Brief description of amendment: The amendment deleted the Technical Specification (TS) index and made other editorial, corrective, and minor changes to the TSs.

Date of issuance: May 20, 2015.

Effective date: As of the date of issuance and shall be implemented within 30 days from the date of issuance.

Amendment No.: 261. A publicly-available version is in ADAMS under Accession No. ML15098A034; documents related to this amendment are listed in the Safety Evaluation enclosed with the amendment.

Renewed Facility Operating License No. NPF–49: Amendment revised the Renewed Operating License and TSs.

*Date of initial notice in **Federal Register**:* November 25, 2014 (79 FR 70213).

The Commission's related evaluation of the amendment is contained in a Safety Evaluation dated May 20, 2015.

No significant hazards consideration comments received: No.

Duke Energy Progress, Inc., Docket No. 50–261, H. B. Robinson Steam Electric Plant Unit 2, Darlington County, South Carolina

Date of application for amendment: June 7, 2013, as supplemented by letter dated July 24, 2014.

Brief description of amendment: The amendment revised the Technical Specifications (TSs) by deleting Surveillance Requirements (SRs) 3.1.7.1, 3.1.7.2, and 3.1.7.3 of TS 3.1.7, ''Rod Position Indication,'' and renumbering SR 3.1.7.4 as SR 3.1.7.1.

Date of issuance: May 27, 2015.

Effective date: As of the date of issuance and shall be implemented within 120 days of issuance.

Amendment No.: 241. A publicly-available version is in ADAMS under Accession No. ML15068A386; documents related to this amendment are listed in the Safety Evaluation (SE) enclosed with the amendment.

Renewed Facility Operating License No. DPR–23: Amendment revised the Facility Operating License and TSs.

*Date of initial notice in **Federal Register**:* August 20, 2013 (78 FR 51222). The supplemental letter dated July 24, 2014, provided additional information that clarified the application, did not expand the scope of the application as originally noticed, and did not change the staff's original proposed no significant hazards consideration determination as published in the **Federal Register**.

The Commission's related evaluation of the amendment is contained in a SE dated May 27, 2015.

No significant hazards consideration comments received: No.

Duke Energy Progress, Inc., Docket No. 50–261, H. B. Robinson Steam Electric Plant Unit 2, Hartsville, South Carolina

Date of amendment request: June 20, 2014.

Brief description of amendment: The amendment revised Technical Specification (TS) 5.5.9 for the Steam Generator Program accident-induced leakage rate value for any design-basis accident, other than a steam generator tube rupture.

Date of issuance: May 26, 2015.

Effective date: As of the date of issuance and shall be implemented within 120 days of issuance.

Amendment No.: 240. A publicly-available version is in ADAMS under Accession No. ML15062A343; documents related to this amendment are listed in the Safety Evaluation (SE) enclosed with the amendment.

Renewed Facility Operating License No. DPR–23: Amendment revised the Facility Operating License and TSs.

*Date of initial notice in **Federal Register**:* September 16, 2014 (79 FR 55510).

The Commission's related evaluation of the amendment is contained in an SE dated May 26, 2015.

No significant hazards consideration comments received: No.

Entergy Nuclear Operations, Inc., Docket Nos. 50–247 and 50–286, Indian Point Nuclear Generating Units 2 and 3, Westchester County, New York

Date of amendment request: April 1, 2014.

Brief description of amendments: The amendments revised the technical specifications (TSs) by implementing Technical Specification Task Force Technical Change Traveler 510, Revision 2, ''Revision to Steam Generator Program Inspection Frequencies and Tube Sample Selection.''

Date of issuance: May 26, 2015.

Effective date: As of the date of issuance and shall be implemented within 30 days of issuance.

Amendment Nos.: 281 and 257. A publicly-available version is in ADAMS under Accession No. ML15110A009; documents related to these amendments are listed in the safety evaluation (SE) enclosed with the amendments.

Facility Operating License Nos. DPR–26 and DPR–64: Amendments revised the facility operating license and TSs.

*Date of initial notice in **Federal Register**:* July 8, 2014 (79 FR 38588).

The Commission's related evaluation of the amendment is contained in an SE dated May 26, 2015.

No significant hazards consideration comments received: No.

Entergy Nuclear Operations, Inc., Docket No. 50–255, Palisades Nuclear Plant (PNP), Van Buren County, Michigan

Date of application for amendment: June 11, 2014.

Brief description of amendment: The amendment modified PNP technical specifications (TSs) to adopt the changes described in TS Task Force (TSTF) traveler TSTF–426, Revision 5, ''Revise or Add Actions to Preclude Entry into [Limiting Condition for Operation (LCO)] 3.0.3—[Risk-Informed TSTF (RITSTF)] Initiatives 6b and 6c'' (ADAMS Accession No. ML113260461).

Date of issuance: May 18, 2015.

Effective date: As of the date of issuance and shall be implemented within 90 days.

Amendment No.: 256. A publicly-available version is in ADAMS under Accession No. ML15103A059; documents related to this amendment are listed in the Safety Evaluation enclosed with the amendment.

Renewed Facility Operating License No. DPR–20: Amendment revised the Renewed Facility Operating License and Technical Specifications

*Date of initial notice in **Federal Register**:* September 2, 2014 (79 FR 52062).

The Commission's related evaluation of the amendment is contained in a Safety Evaluation dated May 18, 2015.

No significant hazards consideration comments received: No.

Exelon Generation Company, LLC (EGC), Docket No. 50–410, Nine Mile Point Nuclear Station, Unit 2, Oswego County, New York

Date of amendment request: November 17, 2014, as supplemented by letter dated March 20, 2015.

Brief description of amendment: The amendment revised the Nine Mile Point Nuclear Station, Unit 2, Technical Specification (TS) Allowable Value for the Main Steam Line Tunnel Lead Enclosure Temperature-High instrumentation from an ambient temperature dependent (variable setpoint) to ambient temperature independent (constant Allowable Value). The changes deleted Surveillance Requirement (SR) 3.3.6.1.2 and revise the Allowable Value for Function 1.g on Table 3.3.6.1–1, ''Primary Containment Isolation Instrumentation.''

Date of issuance: May 26, 2015.

Effective date: As of the date of issuance and shall be implemented within 60 days of issuance.

Amendment No.: 147. A publicly-available version is in ADAMS under

Accession No. ML15110A008; documents the Safety Evaluation related to this amendment enclosed with the amendment.

Renewed Facility Operating License No. NPF–69: Amendment revised the Renewed Facility Operating License and TSs.

*Date of initial notice in **Federal Register**:* March 3, 2015 (80 FR 11476). The supplemental letter dated March 20, 2015, provided additional information that clarified the application, did not expand the scope of the application as originally noticed, and did not change the staff's original proposed no significant hazards consideration determination as published in the **Federal Register**.

The Commission's related evaluation of the amendment is contained in a Safety Evaluation dated May 26, 2015.

No significant hazards consideration comments received: No.

FirstEnergy Nuclear Operating Company, et al., Docket No. 50–412, Beaver Valley Power Station, Unit 2, (BVPS–2) Beaver County, Pennsylvania

Date of amendment request: June 2, 2014, as supplemented by letter dated August 8, 2014.

Description of amendment request: The amendment changes the BVPS–2 technical specifications (TS). Specifically, the amendment revised TS 4.3.2, ''Drainage,'' to correct the minimum drain elevation for the spent fuel storage pool specified in the TS. In accordance with Title 10 of the *Code of Federal Regulations,* Part 50, Appendix B, Section XVI, ''Corrective Action,'' the amendment was required to resolve a TS discrepancy regarding an existing plant design feature.

Date of Issuance: May 20, 2015.

Effective date: As of the date of issuance and shall be implemented within 90 days of issuance.

Amendment No.: 181. A publicly available version is in ADAMS under Accession No. ML15086A251.

Facility Operating License No. NPF–73: Amendment revised the Facility Operating License and Technical Specifications.

*Date of initial notice in **Federal Register**:* September 30, 2014 (79 FR 58816).

The Commission's related evaluation of the amendment is contained in a Safety Evaluation dated May 20, 2015.

No significant hazards consideration comments received: No.

FirstEnergy Nuclear Operating Company, Docket No. 50–440, Perry Nuclear Power Plant, Unit 1, Lake County, Ohio

Date of application for amendment: December 6, 2013, as supplemented by letters dated February 27, July 22, October 8, 2014, and February 4, 2015.

Brief description of amendment: The amendment revises the Updated Safety Analyses Report (USAR) to reflect updated radiological dose calculations based upon using an alternative source term methodology for the applicable design bases events and to revise the technical specification (TS) definition of DOSE EQUIVALENT IODINE–131.

Date of issuance: March 30, 2015.

Effective date: As of the date of issuance and shall be implemented within 30 days.

Amendment No.: 166. A publicly-available version is in ADAMS under Accession No. ML15075A139; documents related to this amendment are listed in the Safety Evaluation enclosed with the amendment.

Facility Operating License No. NPF–58: This amendment revised the TSs and License.

*Date of initial notice in **Federal Register**:* April 15, 2014 (79 FR 21298). The July 22, October 8, 2014, and February 4, 2015, supplements contained clarifying information and did not change the NRC staff's initial proposed finding of no significant hazards condition.

The Commission's related evaluation of the amendment is contained in a Safety Evaluation dated March 30, 2015.

No significant hazards consideration comments received: No.

NextEra Energy Seabrook, LLC, Docket No. 50–443, Seabrook Station, Unit 1, Rockingham County, New Hampshire

Date of amendment request: January 30, 2012, as supplemented by letters dated May 10, 2012, September 20, 2012, March 27, 2013, December 20, 2013, January 29, 2014, March 13, 2014, and February 25, 2015.

Description of amendment request: The original application proposed revisions to the technical specifications (TSs) for new and spent fuel storage as a result of the new criticality analyses for the new fuel vault (NFV) and spent fuel pool (SFP). By letter dated December 20, 2013 (ADAMS Accession No. ML13360A045), NextEra requested that the SFP and NFV be separated into two separate license amendment requests. This amendment revised the TSs related to the NFV. On September 3, 2014, the U.S. Nuclear Regulatory Commission issued Amendment No. 142 that revised the TSs related to spent fuel storage as a result of new criticality analyses for the SFP.

Date of issuance: May 18, 2015.

Effective date: As of its date of issuance, and shall be implemented within 60 days.

Amendment No.: 148. A publicly-available version is in ADAMS under Accession No. ML15118A632; documents related to this amendment are listed in the Safety Evaluation enclosed with the amendment.

Facility Operating License No. NPF–86: Amendment revised the Facility Operating License and Technical Specifications.

*Date of initial notice in **Federal Register**:* August 14, 2012 (77 FR 48559). The supplemental letters dated September 20, 2012, March 27, 2013, December 20, 2013, January 29, 2014, March 13, 2014, and February 25, 2015, provided additional information that clarified the application, did not expand the scope of the application as originally noticed, and did not change the staff's original proposed no significant hazards consideration determination as published in the **Federal Register**.

The Commission's related evaluation of the amendment is contained in a Safety Evaluation dated May 18, 2015.

No significant hazards consideration comments received: No.

Northern States Power Company—Minnesota, Docket Nos. 50–282 and 50–306, Prairie Island Nuclear Generating Plant, Units 1 and 2, Goodhue County, Minnesota

Date of amendment request: June 9, 2014, as supplemented by letter dated December 17, 2014.

Brief description of amendment: The amendments revised Technical Specification (TS) 3.8.1, ''AC [Alternating Current] Source—Operating,'' to revise the emergency diesel generator steady-state voltage and frequency limits specified in Surveillance Requirement (SR) 3.8.1.2, SR 3.8.1.6, and SR 3.8.1.9.

Date of issuance: May 21, 2015.

Effective date: As of the date of issuance and shall be implemented within 90 days of issuance.

Amendment Nos.: Unit 1—214; Unit 2—202. A publicly-available version is in ADAMS under Accession No. ML15086A046; documents related to these amendments are listed in the Safety Evaluation enclosed with the amendments.

Renewed Facility Operating License Nos. DPR–42 and DPR–60: These amendments revised the Renewed Facility Operating License and the Technical Specifications.

*Date of initial notice in **Federal Register**:* August 5, 2014 (79 FR 45479). The supplement dated December 17, 2014, provided additional information that clarified the application, did not expand the scope of the application as originally noticed, and did not change the staff's original proposed no significant hazards consideration determination as published in the **Federal Register**.

The Commission's related evaluation of the amendments is contained in a Safety Evaluation dated May 21, 2015.

No significant hazards consideration comments received: No.

Northern States Power Company—Minnesota, Docket Nos. 50–282 and 50–306, Prairie Island Nuclear Generating Plant, Units 1 and 2, Goodhue County, Minnesota

Date of amendment requests: February 20, 2013, as supplemented by letters dated June 25, 2013; September 15, 2014; and February 26, 2015.

Brief description of amendments: The amendments revised Technical Specification (TS) 3.5.3, ''ECCS [Emergency Core Cooling Systems]—Shutdown,'' to remove Note 1 and change the Mode Applicability to eliminate the potential for non-conservative plant operation.

Date of issuance: May 20, 2015.

Effective date: As of the date of issuance and shall be implemented within 90 days of issuance.

Amendment Nos.: Unit 1—213; Unit 2—201. A publicly-available version is in ADAMS under Accession No. ML15062A013; documents related to these amendments are listed in the Safety Evaluation enclosed with the amendments.

Renewed Facility Operating License Nos. DPR–42 and DPR–60: These amendments revised the Renewed Facility Operating License and the Technical Specifications.

*Date of initial notice in **Federal Register**:* August 20, 2013 (78 FR 51229). The supplement dated September 15, 2014, provided additional information that clarified the application, did not expand the scope of the application as originally noticed, and did not change the staff's original proposed no significant hazards consideration determination as published in the **Federal Register**. The Commission issued a revised no significant hazards consideration on March 17, 2015 (80 FR 13910), to consider the aspects of the proposed Mode Applicability change in the February 26, 2015, supplemental letter. The revised notice also included the correct initial submittal date of February 20, 2013.

The Commission's related evaluation of the amendments is contained in a Safety Evaluation dated May 20, 2015.

No significant hazards consideration comments received: No.

South Carolina Electric & Gas Company, Docket Nos. 52–027 and 52–028, Virgil C. Summer Nuclear Station, Units 2 and 3, Fairfield County, South Carolina

Date of amendment request: February 27, 2014, and supplemented by letter dated August 21, 2014.

Description of amendment: The amendment revises the Updated Final Safety Analysis Report in regard to Tier 2 and Tier 2* information related to the CA03 structural module, which is the in-containment refueling water storage tank (IRWST) west wall. The changes sought to clarify the materials used in fabrication of the module, as well as the design details related to the horizontal stiffeners used to support the IRWST, and module legs used to anchor the module in place.

Date of issuance: April 17, 2015.

Effective date: As of the date of issuance and shall be implemented within 90 days of issuance.

Amendment No.: 25. A publicly-available version is in ADAMS under Accession No. ML15029A419; documents related to this amendment are listed in the Safety Evaluation enclosed with the amendment.

Facility Combined Licenses No. NPF–93 and NPF–94: Amendment revised the Facility Combined Licenses.

*Date of initial notice in **Federal Register**:* April 29, 2014 (79 FR 24024). The supplemental letter dated August 21, 2014, provided additional information that clarified the application, did not expand the scope of the application as originally noticed, and did not change the staff's original proposed no significant hazards consideration determination as published in the **Federal Register**.

The Commission's related evaluation of the amendment is contained in the Safety Evaluation dated April 17, 2015.

No significant hazards consideration comments received: No.

Virginia Electric and Power Company, Docket Nos. 50–338 and 50–339, North Anna Power Station, Units 1 and 2, Louisa County, Virginia

Date of amendment request: February 4, 2015.

Brief description of amendment: The license amendments approve changes to the Technical Specification (TS) TS 3.1.7, ''Rod Position Indication,'' to provide an additional monitoring option for an inoperable control rod position indicator. Specifically, the proposed changes would allow monitoring of control rod drive mechanism stationary gripper coil voltage every eight hours as an alternative to using the movable in core detectors every eight hours to verify control rod position.

Date of issuance: May 14, 2015.

Effective date: As of the date of issuance and shall be implemented within 30 days from the date of issuance.

Amendment Nos.: 273 and 255. A publicly-available version is in ADAMS under Accession No. ML15083A436. Documents related to the amendments are listed in the Safety Evaluation enclosed with the amendments.

Renewed Facility Operating License Nos. NPF–4 and NPF–7: Amendments changed the licenses and Technical Specification.

*Date of initial notice in **Federal Register**:* March 3, 2015 (80 FR 11488).

The Commission's related evaluation of the amendments is contained in a Safety Evaluation dated May 14, 2015.

No significant hazards consideration comments received: No.

ZionSolutions, LLC, Docket Nos. 50–295 and 50–304, Zion Nuclear Power Station, Units 1 and 2, Lake County, Illinois

Date of application for amendment: May 27, 2014, as supplemented by letter dated November 6, 2014.

Brief description of amendment: This amendment revises the Zion Nuclear Power Station Licenses to approve the revised Emergency Plan.

Date of issuance: May 14, 2015.

Effective date: As of the date of issuance and shall be implemented within 60 days.

Amendment Nos.: 189 and 176.

Facility Operating License Nos. NPF–39 and NPF–48: These amendments revise the Licenses.

*Date of initial notice in **Federal Register**:* July 22, 2014, (79 FR 42553).

The Commission's related evaluation of the amendment is contained in a Safety Evaluation dated May 14, 2015.

No significant hazards consideration comments received: No.

Dated at Rockville, Maryland, this 1st day of June 2015.

For the Nuclear Regulatory Commission.

A. Louise Lund,

Acting Director, Division of Operating Reactor Licensing, Office of Nuclear Reactor Regulation.

[FR Doc. 2015–13815 Filed 6–8–15; 8:45 am]

BILLING CODE 7590–01–P

NUCLEAR REGULATORY COMMISSION

[NRC–2015–0001]

Sunshine Act Meeting Notice

DATE: Week of June 8, 2015.

PLACE: Commissioners' Conference Room, 11555 Rockville Pike, Rockville, Maryland.

STATUS: Public.

Week of June 8, 2015—Tentative

Thursday, June 11, 2015

9:55 a.m. Affirmation Session (Public Meeting) (Tentative)

Exelon Generation Company, LLC (Dresden Nuclear Power Station, Confirmatory Order Modifying License)—Notice of Appeal of LBP–14–4 (Tentative)

This meeting will be webcast live at the Web address—*http://www.nrc.gov/.*

* * * * *

The schedule for Commission meetings is subject to change on short notice. For more information or to verify the status of meetings, contact Glenn Ellmers at 301–415–0442 or via email at *Glenn.Ellmers@nrc.gov.*

* * * * *

The NRC Commission Meeting Schedule can be found on the Internet at: *http://www.nrc.gov/public-involve/public-meetings/schedule.html.*

* * * * *

The NRC provides reasonable accommodation to individuals with disabilities where appropriate. If you need a reasonable accommodation to participate in these public meetings, or need this meeting notice or the transcript or other information from the public meetings in another format (*e.g.* braille, large print), please notify Kimberly Meyer, NRC Disability Program Manager, at 301–287–0727, by videophone at 240–428–3217, or by email at *Kimberly.Meyer-Chambers@nrc.gov.* Determinations on requests for reasonable accommodation will be made on a case-by-case basis.

* * * * *

Members of the public may request to receive this information electronically. If you would like to be added to the distribution, please contact the Nuclear Regulatory Commission, Office of the Secretary, Washington, DC 20555 (301–415–1969), or email *Brenda.Akstulewicz@nrc.gov* or *Patricia.Jimenez@nrc.gov.*

Dated: June 4, 2015.

Glenn Ellmers,

Policy Coordinator, Office of the Secretary.

[FR Doc. 2015–14162 Filed 6–5–15; 11:15 am]

BILLING CODE 7590–01–P

OFFICE OF PERSONNEL MANAGEMENT

Privacy Act of 1974; Computer Matching Program Between the Office of Personnel Management and Social Security Administration

AGENCY: Office of Personnel Management (OPM).

ACTION: Notice-computer matching between the Office of Personnel Management and the Social Security Administration (Computer Matching Agreement 1071).

SUMMARY: In accordance with the Privacy Act of 1974 (5 U.S.C. 552a), as amended by the Computer Matching and Privacy Protection Act of 1988 (Pub. L. 100–503), Office of Management and Budget (OMB) Guidelines on the Conduct of Matching Programs (54 FR 25818 published June 19, 1989), and OMB Circular No. A–130, revised November 28, 2000, ''Management of Federal Information Resources,'' the Office of Personnel Management (OPM) is publishing notice of its new computer matching program with the Social Security Administration (SSA). This notice replaces the notice placed in the **Federal Register**/Vol. 78, No. 5/Tuesday, January 8, 2013/Notices, page 1275.

DATES: OPM will file a report of the subject matching program with the Committee on Homeland Security and Governmental Affairs of the Senate, the Committee on Oversight and Government Reform of the House of Representatives, and the Office of Information and Regulatory Affairs, Office of Management and Budget (OMB). The matching program will begin 30 days after the **Federal Register** notice has been published or 40 days after the date of OPM's submissions of the letters to Congress and OMB, whichever is later. The matching program will continue for 18 months from the beginning date and may be extended an additional 12 months thereafter. Subsequent matches will run until one of the parties advises the other in writing of its intention to reevaluate, modify, and/or terminate the agreement.

ADDRESSES: Send comments to Deon Mason, Chief, Business Services, Resource Management, Retirement Services, Office of Personnel Management, Room 3316–G, 1900 E Street NW., Washington, DC 20415.

FOR FURTHER INFORMATION,CONTACT: Bernard A. Wells III on (202) 606-2730.

SUPPLEMENTARY INFORMATION:

A. General

The Privacy Act (5 U.S.C. 552a), as amended, establishes the conditions under which computer matching involving the Federal government could be performed and adding certain protections for individuals applying for and receiving Federal benefits. Section 7201 of the Omnibus Budget Reconciliation Act of 1990 (Pub. L. 101–508) further amended the Privacy Act regarding protections for such individuals. The Privacy Act, as amended, regulates the use of computer matching by Federal agencies when records in a system of records are matched with other Federal, State, or local government records. Among other things, it requires Federal agencies involved in computer matching programs to:

(1) Negotiate written agreements with the other agency for agencies participating in the matching programs;

(2) Obtain the approval of the match agreement by the Data Integrity Boards (DIB) of the participating Federal agencies;

(3) Furnish detailed reports about matching programs to Congress and OMB;

(4) Notify applicants and beneficiaries that their records are subject to matching;

(5) Verify match findings before reducing, suspending, termination or denying an individual's benefits or payments.

B. OPM Computer Matches Subject to the Privacy Act

We have taken action to ensure that all of OPM's computer matching programs comply With the requirements of the Privacy Act, as amended.

Notice of Computer Matching Program, Office of Personnel Management (OPM) with the Social Security Administration (SSA)

A. Participating agencies

OPM and SSA.

B. Purpose of the Matching Program

The purpose of this agreement is to establish the terms, conditions and safeguards for disclosure of Social Security benefit information to OPM via direct computer link for the administration of certain programs by OPM's Retirement Services. OPM is legally required to offset specific

benefits by a percentage of benefits (*i.e.* Disability Annuitants, Children Survivor Annuitants and Spousal Survivor Annuitants) payable under Title II of the Social Security Act. This matching activity will enable OPM to compute benefits at the correct rate and determine eligibility for these benefits.

C. Authority for Conducting the Matching Program

Section 8461 (h) of title 5 of the United States Code.

D. Categories of Records and Individuals Covered by the Match

Under the matching program, OPM will match SSA's disability insurance benefits (DIB) and payment date against OPM's records of retirees receiving a FERS disability annuity. The purpose of the matching program is to identify a person receiving both a FERS disability annuity and a DIB under section 223 of the Social Security Act, 42 U.S.C. 423, in order to apply OPM offsets. Under FERS, 5 U.S.C. 8452(a)(2)(A), for any month in which an annuitant is entitled to both a FERS disability annuity and to a DIB, the FERS annuity shall be computed as follows: The FERS disability annuity is reduced, for any month during the first year after the individual's FERS disability annuity commences or is restored, by 100% of the individual's assumed Social Security DIB for such month, and, for any month occurring during a period other than the period described above, by 60% of the individual's assumed Social Security DIB for such month. OPM will provide SSA with an extract from the Annuity Master File and from pending claims snapshot records via the File Transfer Management System (FTMS). The extracted file will contain identifying information concerning the child survivor annuitant for whom OPM needs information concerning receipt of SSA child survivor benefits: full name, Social Security Number, date of birth, and type of information requested, as required to extract data from the SSA State Verification and Exchange System Files for Title II records. Each record on the OPM file will be matched to SSA's records to identify FERS child survivor annuitants who are receiving SSA CIBs. The SSA systems of records involved in this CMA are the Master Files of Social Security Number Holders and SSN Applications (Numident), 60–0058 and the MBR, 60–0090. OPM's system of records involved in this matching program is designated OPM/Central–1, Civil Service Retirement and Insurance Records. For records from OPM/Central–1, notice was provided by the publication of the system of records in the **Federal Register** at 64 FR 54930 (Oct. 8, 1999), as amended at 73 FR 15013 (March 20, 2008).

OPM's records of surviving spouses who may be eligible to receive the FERS Supplementary Annuity will be matched against SSA's mother or father's insurance benefit and/or disabled widow(er)'s insurance benefit records. If the surviving spouse is receiving one of the above described Social Security benefits, he or she is not eligible to receive the FERS Supplementary Annuity. FERS, 5 U.S.C. 8442 (f) provides that a survivor who is entitled to a survivor's annuity and who meets certain other statutory requirements shall also be entitled to a Supplementary Annuity. To be eligible to receive a Supplementary Annuity for a given month, the surviving spouse of a deceased FERS annuitant must be eligible for a FERS survivor annuity, be under age 60, be an individual who would be entitled to widow's or widower's insurance benefits under the requirements of sections 202(e) and 402(f), based on the wages and self employment survivor had attained age 60 and otherwise satisfied necessary requirement for widow's or widow(er's) insurance benefits. See *5* U.S.C 8442(f)(4)(B). The individual must not be eligible for Social Security mother's or father's insurance benefits or disabled widow(er)'s insurance benefits based on the deceased annuitant's wages and selfemployment income.

E. Privacy Safeguards and Security

The Privacy Act (5 U.S.C. 552a(o)(l)(G)) requires that each matching agreement specify procedures for ensuring the administrative, technical, and physical security of the records matched and the results of such programs. All Federal agencies are subject to: The Federal Information Security Management Act of 2002 (FISMA) (44 U.S.C. 3541 *et seq.);* related OMB circulars and memorandum (*e.g.* OMB Circular A–130 and OMB M–06–16); National Institute of Science and Technology (NIST) directives; and the Federal Acquisition Regulations (FAR). These laws, circulars, memoranda, directives and regulations include requirements for safeguarding Federal information systems and personally identifiable information used in Federal agency business processes, as well as related reporting requirements. OPM and SSA recognize that all laws, circulars, memoranda, directives, and regulations relating to the subject of this agreement and published subsequent to the effective date of this agreement must also be implemented if mandated. FISMA requirements apply to all Federal contractors and organizations or sources that process or use Federal information, or that operate, use, or have access to Federal information systems on behalf of an agency. OPM will be responsible for oversight and compliance of their contractors and agents. Both OPM and SSA reserve the right to conduct onsite inspection to monitor compliance with FISMA regulations.

F. Inclusive Dates of the Match

The matching program shall become effective upon signing of the agreement by both parties to the agreement and approval of the agreement by the Data Integrity Boards of the respective agencies, but no sooner than 40 days after notice of the matching program is sent to Congress and the Office of Management and Budget or 30 days after publication of this notice in the **Federal Register**, whichever is later. The matching program will continue for 18 months from the effective date and may be extended for an additional 12 months thereafter, if certain conditions are met.

U.S. Office of Personnel Management.

Katherine Archuleta,

Director.

[FR Doc. 2015–14082 Filed 6–8–15; 8:45 am]

BILLING CODE 6325–38–P

RAILROAD RETIREMENT BOARD

Agency Forms Submitted for OMB Review, Request for Comments

Summary: In accordance with the Paperwork Reduction Act of 1995 (44 U.S.C. chapter 35), the Railroad Retirement Board (RRB) is forwarding an Information Collection Request (ICR) to the Office of Information and Regulatory Affairs (OIRA), Office of Management and Budget (OMB). Our ICR describes the information we seek to collect from the public. Review and approval by OIRA ensures that we impose appropriate paperwork burdens.

The RRB invites comments on the proposed collection of information to determine (1) the practical utility of the collection; (2) the accuracy of the estimated burden of the collection; (3) ways to enhance the quality, utility, and clarity of the information that is the subject of collection; and (4) ways to minimize the burden of collections on respondents, including the use of automated collection techniques or other forms of information technology. Comments to the RRB or OIRA must contain the OMB control number of the ICR. For proper consideration of your

comments, it is best if the RRB and OIRA receive them within 30 days of the publication date.

Under section 2 of the Railroad Retirement Act, an annuity is not payable or is reduced for any month in which the annuitant works for a railroad or earns more than prescribed dollar amounts from either non-railroad employment or self-employment. Certain types of work may indicate an annuitant's recovery from disability. The provisions relating to the reduction or non-payment of an annuity by reason of work, and an annuitant's recovery from disability for work, are prescribed in 20 CFR 220.17–220.20. The RRB conducts continuing disability reviews (CDR) to determine whether an annuitant continues to meet the disability requirements of the law. Provisions relating to when and how often the RRB conducts CDR's are prescribed in 20 CFR 220.186.

Form G–254, *Continuing Disability Report,* is used by the RRB to develop information for a CDR determination, including a determination prompted by a report of work, return to railroad service, allegation of medical improvement, or a routine disability review call-up. Form G–254a, Continuing Disability Update Report, is used to help identify a disability annuitant whose work activity and/or recent medical history warrants completion of Form G–254 for a more extensive review. Completion is required to retain a benefit. One response is requested of each respondent to Forms G–254 and G–254a.

Previous Requests for Comments: The RRB has already published the initial 60-day notice (80 FR 13921 on March 17, 2015) required by 44 U.S.C. 3506(c)(2). That request elicited no comments.

Information Collection Request (ICR)

Title: Continuing Disability Report.
OMB Control Number: 3220–0187.
Forms submitted: G–254 and G–254a.
Type of request: Revision of a currently approved collection.
Affected public: Individuals or Households.
Abstract: Under the Railroad Retirement Act, a disability annuity can be reduced or not paid, depending on the amount of earnings and type of work performed. The collection obtains information about a disabled annuitant's employment and earnings.

Changes proposed: The RRB proposes the following changes to Form G–254:

- Revise current Item 12a to include the spouse as a source of employment.
- Revise current Items 15k, 17a, and 17b to show the impact the disability has had on their business and decision making abilities.
- Renumber current Item 31 to Item 31a and create New Items 31b and c to identify the annuitant who requires an assistive device and to identify the assistive device, such as a cane, oxygen, etc.
- Other minor editorial changes.

The RRB also proposes the following change to Form G–254A:

- Add a request for the social security number of the applicant who is not the employee to resolve any ambiguous issues.

The burden estimate for the ICR is as follows:

Form No.	Annual responses	Time (minutes)	Burden (hours)
G–254	1,500	5–35	623
G–254a	1,500	5	125
Total	3,000		748

Additional Information or Comments: Copies of the forms and supporting documents can be obtained from Dana Hickman at (312) 751–4981 or *Dana.Hickman@RRB.GOV.*

Comments regarding the information collection should be addressed to Charles Mierzwa, Railroad Retirement Board, 844 North Rush Street, Chicago, Illinois, 60611–2092 or *Charles.Mierzwa@RRB.GOV* and to the OMB Desk Officer for the RRB, Fax: 202–395–6974, Email address: *OIRA_Submission@omb.eop.gov.*

Charles Mierzwa,

Chief of Information Resources Management.

[FR Doc. 2015–14096 Filed 6–8–15; 8:45 am]

BILLING CODE 7905–01–P

RAILROAD RETIREMENT BOARD

Proposed Collection; Comment Request

Summary: In accordance with the requirement of section 3506(c)(2)(A) of the Paperwork Reduction Act of 1995 which provides opportunity for public comment on new or revised data collections, the Railroad Retirement Board (RRB) will publish periodic summaries of proposed data collections.

Comments are invited on: (a) Whether the proposed information collection is necessary for the proper performance of the functions of the agency, including whether the information has practical utility; (b) the accuracy of the RRB's estimate of the burden of the collection of the information; (c) ways to enhance the quality, utility, and clarity of the information to be collected; and (d) ways to minimize the burden related to the collection of information on respondents, including the use of automated collection techniques or other forms of information technology.

Title and purpose of information collection: Employee's Certification; OMB 3220–0140 Section 2 of the Railroad Retirement Act (RRA), provides for the payment of an annuity to the spouse or divorced spouse of a retired railroad employee. For the spouse or divorced spouse to qualify for an annuity, the RRB must determine if any of the employee's current marriage to the applicant is valid.

The requirements for obtaining documentary evidence to determine valid marital relationships are prescribed in 20 CFR 219.30 through 219.35. Section 2(e) of the RRA requires that an employee must relinquish all rights to any railroad employer service before a spouse annuity can be paid.

The RRB uses Form G–346, Employee's Certification, to obtain the information needed to determine whether the employee's current marriage is valid. Form G–346 is completed by the retired employee who is the husband or wife of the applicant for a spouse annuity. Completion is required to obtain a benefit. One response is requested of each respondent. The RRB proposes no changes to Form G–346.

Form G–346sum, Employee Certification Summary, which mirrors the information collected on Form G–346, is used when an employee, after being interviewed by an RRB field office staff member ''signs'' the form using an alternative signature method known as ''attestation.'' Attestation refers to the action taken by the RRB field office employee to confirm and annotate the

RRB's records of the applicant's affirmation under penalty of perjury that the information provided is correct and the applicant's agreement to sign the form by proxy. The RRB proposes no changes to Form G–346sum.

ESTIMATE OF ANNUAL RESPONDENT BURDEN

Form No.	Annual responses	Time (min.)	Burden (hrs.)
G–346	4,830	5	403
G–346sum	2,070	5	172
Total	6,900		575

Additional Information or Comments: To request more information or to obtain a copy of the information collection justification, forms, and/or supporting material, contact Dana Hickman at (312) 751–4981 or *Dana.Hickman@RRB.GOV.* Comments regarding the information collection should be addressed to Charles Mierzwa, Railroad Retirement Board, 844 North Rush Street, Chicago, Illinois 60611–2092 or emailed to *Charles.Mierzwa@RRB.GOV.* Written comments should be received within 60 days of this notice.

Charles Mierzwa,

Chief of Information Resources Management.

[FR Doc. 2015–14097 Filed 6–8–15; 8:45 am]

BILLING CODE 7905–01–P

SECURITIES AND EXCHANGE COMMISSION

Sunshine Act Meeting

Notice is hereby given, pursuant to the provisions of the Government in the Sunshine Act, Public Law 94–409, that the Securities and Exchange Commission will hold a Closed Meeting on Thursday, June 11, 2015 at 2 p.m.

Commissioners, Counsel to the Commissioners, the Secretary to the Commission, and recording secretaries will attend the Closed Meeting. Certain staff members who have an interest in the matters also may be present.

The General Counsel of the Commission, or her designee, has certified that, in her opinion, one or more of the exemptions set forth in 5 U.S.C. 552b(c)(3), (5), (7), 9(B) and (10) and 17 CFR 200.402(a)(3), (5), (7), (9)(ii), and (10), permit consideration of the scheduled matter at the Closed Meeting.

Commissioner Piwowar, as duty officer, voted to consider the items listed for the Closed Meeting in closed session.

The subject matter of the Closed Meeting will be:

Institution and settlement of injunctive actions;

Institution and settlement of administrative proceedings;

Adjudicatory matter; and

Other matters relating to enforcement proceedings.

At times, changes in Commission priorities require alterations in the scheduling of meeting items.

For further information and to ascertain what, if any, matters have been added, deleted or postponed, please contact the Office of the Secretary at (202) 551–5400.

Dated: June 4, 2015.

Brent J. Fields,

Secretary.

[FR Doc. 2015–14137 Filed 6–5–15; 11:15 am]

BILLING CODE 8011–01–P

SECURITIES AND EXCHANGE COMMISSION

[Release No. 34–75102; File No. SR–NYSEArca-2015–48]

Self-Regulatory Organizations; NYSE Arca, Inc.; Notice of Filing and Immediate Effectiveness of Proposed Rule Change Amending the NYSE Arca Options Fee Schedule to Modify Certain of Its Posting Credits

June 3, 2015.

Pursuant to section 19(b)(1)[1] of the Securities Exchange Act of 1934 (the ''Act'')[2] and Rule 19b–4 thereunder,[3] notice is hereby given that, on May 29, 2015, NYSE Arca, Inc. (the ''Exchange'' or ''NYSE Arca'') filed with the Securities and Exchange Commission (the ''Commission'') the proposed rule change as described in Items I, II, and III below, which Items have been prepared by the self-regulatory organization. The Commission is publishing this notice to solicit comments on the proposed rule change from interested persons.

[1] 15 U.S.C.78s(b)(1).

[2] 15 U.S.C. 78a.

[3] 17 CFR 240.19b–4.

I. Self-Regulatory Organization's Statement of the Terms of the Substance of the Proposed Rule Change

The Exchange proposes to amend the NYSE Arca Options Fee Schedule (''Fee Schedule'') to modify certain of its posting credits. The Exchange proposes to implement the fee change effective June 1, 2015. The text of the proposed rule change is available on the Exchange's Web site at *www.nyse.com*, at the principal office of the Exchange, and at the Commission's Public Reference Room.

II. Self-Regulatory Organization's Statement of the Purpose of, and Statutory Basis for, the Proposed Rule Change

In its filing with the Commission, the self-regulatory organization included statements concerning the purpose of, and basis for, the proposed rule change and discussed any comments it received on the proposed rule change. The text of those statements may be examined at the places specified in Item IV below. The Exchange has prepared summaries, set forth in sections A, B, and C below, of the most significant parts of such statements.

A. Self-Regulatory Organization's Statement of the Purpose of, and Statutory Basis for, the Proposed Rule Change

1. Purpose

The Exchange proposes to amend its Fee Schedule to modify certain of its posting credits. The Exchange proposes to implement the fee change effective June 1, 2015.

Currently, the Exchange offers Order Flow Providers (each an ''OFP'') a number of ways to earn posting credits for electronic Customer and Professional Customer executions on the Exchange, provided the OFP meets certain volume thresholds. The purpose of this filing is to modify certain of these posting credits to attract additional order flow to the Exchange.

First, the Exchange proposes to modify the Customer and Professional Customer Incentive Program, which

provides various alternatives to earn credits. One of the current alternatives provides an additional $0.03 credit on Customer and Professional Customer posting credits if an OFP achieves at least 0.75% of total industry Customer equity and ETF option average daily volume (''ADV'') from Customer and Professional Customer posted orders in both Penny Pilot and non-Penny Pilot issues, of which at least 0.28% of total industry Customer equity and ETF option ADV is from Customer and Professional Customer posted orders in non-Penny Pilot issues. The Exchange proposes to slightly lower the minimum ADV from posted orders in non-Penny Pilot issues from 0.28% to 0.25%. The Exchange believes this proposed change would provide additional incentives to direct Customer and Professional Customer order flow to the Exchange, which benefits all market participants through increased liquidity and enhanced price discovery.

Second, the Exchange proposes to modify the Customer and Professional Customer Posting Credit Tiers in Non Penny Pilot Issues, which provides two ways (Tier A or Tier B) to achieve a $0.83 credit if specified volume thresholds have been met. Currently, pursuant to Tier A, the $0.83 credit may be reached by achieving at least 0.80% of total industry Customer equity and ETF option average ADV from Customer and Professional Customer posted orders in all issues, plus an executed ADV of Retail Orders of 0.1% ADV of U.S. equity market share posted and executed on the NYSE Arca Equity Market. Alternatively, the $0.83 credit may be achieved pursuant to Tier B, by achieving a level of at least 1.00% of total industry Customer equity and ETF option ADV from Customer and Professional Customer posted orders in both Penny Pilot and non-Penny Pilot issues.

The Exchange proposes to modify both Tiers as follows.

- Tier A would require a minimum of 0.70% (rather than 0.80%) of total industry Customer equity and ETF options ADV from Customer and Professional Customer posted orders in all issues.[4]
- Tier B would require a minimum of 0.80% (rather than 1.00%) of total industry Customer equity and ETF options ADV from Customer and Professional Customer posted orders in all issues.

In addition, the Exchange proposes to replace the language ''both Penny Pilot and non-Penny Pilot Issues'' in Tier B with ''all Issues'' for simplicity and to conform to the language used in Tier A. The Exchange believes the proposed changes to the Customer and Professional Customer Posting Credit Tiers in Non Penny Pilot Issues would encourage market participants to direct a higher rate of Customer and Professional Customer orders to the Exchange.

Finally, the Exchange proposes to make a non-substantive change to the Base credit of the Customer and Professional Customer Posting Credit Tiers in Non Penny Pilot Issues by adding a dollar sign before (0.75), so that it accurately reflects the baseline credit of ($0.75), which the Exchange believes would add clarity and consistency to the Fee Schedule.

2. Statutory Basis

The Exchange believes that the proposed rule change is consistent with section 6(b) of the Act,[5] in general, and furthers the objectives of sections 6(b)(4) and (5) of the Act,[6] in particular, because it provides for the equitable allocation of reasonable dues, fees, and other charges among its members, issuers and other persons using its facilities and does not unfairly discriminate between customers, issuers, brokers or dealers.

The Exchange believes the adjustments to qualifications for enhanced posting liquidity credits, are reasonable and not unfairly discriminatory as they are designed to attract increased Customer and Professional Customer business on the Exchange and are achievable in various ways. An increase in Customer and Professional Customer orders executed on the Exchange benefits all participants by offering greater price discovery, increased transparency, and an increased opportunity to trade on the Exchange. The Exchange also believes that the proposed credits are reasonable because they are within a range of similar credits available on other option exchanges.[7] Additionally, attracting posted Customer and Professional Customer order flow is desirable because it encourages liquidity to be present on the Exchange.

The Exchange believes that the proposed changes in the Customer Posting Credit Tiers in Non Penny Pilot Issues and the Customer Incentive Program are equitable and not unfairly discriminatory because they will be available to all OTPs that execute posted electronic Customer and Professional Customer orders on the Exchange on an equal and non-discriminatory basis, in particular because they provide alternative means of achieving the same credit. The Exchange believes that providing methods for achieving the credits based on posted electronic Customer and Professional Customer Executions in both Penny Pilot and non-Penny Pilot issues is equitable and not unfairly discriminatory because it would continue to result in more OTPs qualifying for the credits and therefore reducing their overall transaction costs on the Exchange.

Further, the Exchange believes the proposed change to the Customer Posting Credit Tiers in Non Penny Pilot Issues and Customer Incentive Program is reasonable because it is designed to continue to bring additional posted order flow to NYSE Arca Equities [sic], so as to provide additional opportunities for all ETP [sic] Holders to trade on NYSE Arca Equities [sic].

The Exchange believes that the proposed a non-substantive, technical change to the Base credit of the Customer and Professional Customer Posting Credit Tiers in Non Penny Pilot Issues by adding a dollar sign before (0.75), so that it accurately reflects the baseline credit of ($0.75), is reasonable, equitable and non-discriminatory because it would add clarity and consistency to the Fee Schedule.

For these reasons, the Exchange believes that the proposal is consistent with the Act.

B. Self-Regulatory Organization's Statement on Burden on Competition

In accordance with section 6(b)(8) of the Act,[8] the Exchange does not believe that the proposed rule change will impose any burden on competition that is not necessary or appropriate in furtherance of the purposes of the Act. Instead, the Exchange believes that the proposed change would continue to encourage competition, including by

[4] The Commission notes that the Exchange is not proposing to modify the additional Tier A requirement of an additional executed ADV of Retail Orders of 0.1% ADV of U.S. equity market share posted and executed on the NYSE Arca Equity Market.

[5] 15 U.S.C. 78f(b).

[6] 15 U.S.C. 78f(b)(4) and (5).

[7] *See, e.g.,* ISE Gemini, LLC fee schedule, *available at, http://www.ise.com/assets/gemini/documents/OptionsExchange/legal/fee/Topaz_Fee_Schedule.pdf* (providing rebates ranging from $0.75—$0.85 predicated on volume tiers); NASDAQ Options Market—Fees and Rebates, *available at, http://www.nasdaqtrader.com/Micro.aspx?id=optionsPricing* (providing a flat rebate of $0.84 with an additional rebate for participants that qualify for Penny Pilot Options Customer or Professional Rebate to Add Liquidity Tiers 7 or 8 in a given month); BATS Options Exchange fee schedule, *available at, http://www.batsoptions.com/support/fee_schedule/* (providing flat $0.85 posting credit for Customer orders that is not contingent on any volume requirement).

[8] 15 U.S.C. 78f(b)(8).

attracting additional liquidity to the Exchange, which would continue to make the Exchange a more competitive venue for, among other things, order execution and price discovery.

The proposed changes to the Customer Posting Credit Tiers in Non Penny Pilot Issues, and the proposed modification to the Customer Incentives are designed to attract additional volume, in particular posted electronic Customer and Professional Customer executions, to the Exchange, which would promote price discovery and transparency in the securities markets thereby benefitting competition in the industry. As stated above, the Exchange believes that the proposed change would impact all similarly situated OTPs that post electronic Customer and Professional Customer executions on the Exchange equally, and as such, the proposed change would not impose a disparate burden on competition either among or between classes of market participants.

The Exchange notes that it operates in a highly competitive market in which market participants can readily favor competing venues. In such an environment, the Exchange must continually review, and consider adjusting, its fees and credits to remain competitive with other exchanges. For the reasons described above, the Exchange believes that the proposed rule change reflects this competitive environment.

C. Self-Regulatory Organization's Statement on Comments on the Proposed Rule Change Received From Members, Participants, or Others

No written comments were solicited or received with respect to the proposed rule change.

III. Date of Effectiveness of the Proposed Rule Change and Timing for Commission Action

The foregoing rule change is effective upon filing pursuant to section 19(b)(3)(A)[9] of the Act and subparagraph (f)(2) of Rule 19b–4[10] thereunder, because it establishes a due, fee, or other charge imposed by the Exchange.

At any time within 60 days of the filing of such proposed rule change, the Commission summarily may temporarily suspend such rule change if it appears to the Commission that such action is necessary or appropriate in the public interest, for the protection of investors, or otherwise in furtherance of the purposes of the Act. If the Commission takes such action, the Commission shall institute proceedings under section 19(b)(2)(B)[11] of the Act to determine whether the proposed rule change should be approved or disapproved.

IV. Solicitation of Comments

Interested persons are invited to submit written data, views, and arguments concerning the foregoing, including whether the proposed rule change is consistent with the Act. Comments may be submitted by any of the following methods:

Electronic Comments

- Use the Commission's Internet comment form (*http://www.sec.gov/rules/sro.shtml*); or
- Send an email to *rule-comments@sec.gov*. Please include File Number SR–NYSEArca–2015–48 on the subject line.

Paper Comments

- Send paper comments in triplicate to Brent J. Fields, Secretary, Securities and Exchange Commission, 100 F Street NE., Washington, DC 20549–1090.

All submissions should refer to File Number SR–NYSEArca–2015–48. This file number should be included on the subject line if email is used. To help the Commission process and review your comments more efficiently, please use only one method. The Commission will post all comments on the Commission's Internet Web site (*http://www.sec.gov/rules/sro.shtml*). Copies of the submission, all subsequent amendments, all written statements with respect to the proposed rule change that are filed with the Commission, and all written communications relating to the proposed rule change between the Commission and any person, other than those that may be withheld from the public in accordance with the provisions of 5 U.S.C. 552, will be available for Web site viewing and printing in the Commission's Public Reference Room, 100 F Street, NE., Washington, DC 20549 on official business days between the hours of 10:00 a.m. and 3:00 p.m. Copies of such filing also will be available for inspection and copying at the principal office of the Exchange. All comments received will be posted without change; the Commission does not edit personal identifying information from submissions. You should submit only information that you wish to make available publicly. All submissions should refer to File Number SR–NYSEArca–2015–48, and should be submitted on or before June 30, 2015.

For the Commission, by the Division of Trading and Markets, pursuant to delegated authority.[12]

Robert W. Errett,

Deputy Secretary.

[FR Doc. 2015–13987 Filed 6–8–15; 8:45 am]

BILLING CODE 8011–01–P

[9] 15 U.S.C. 78s(b)(3)(A).

[10] 17 CFR 240.19b-4(f)(2).

[11] 15 U.S.C. 78s(b)(2)(B).

[12] 17 CFR 200.30–3(a)(12).

SECURITIES AND EXCHANGE COMMISSION

[Release No. IC–31655]

Notice of Applications for Deregistration Under Section 8(f) of the Investment Company Act of 1940

May 29, 2015.

The following is a notice of applications for deregistration under section 8(f) of the Investment Company Act of 1940 for the month of May 2015. A copy of each application may be obtained via the Commission's Web site by searching for the file number, or for an applicant using the Company name box, at *http://www.sec.gov/search/search.htm* or by calling (202) 551–8090. An order granting each application will be issued unless the SEC orders a hearing. Interested persons may request a hearing on any application by writing to the SEC's Secretary at the address below and serving the relevant applicant with a copy of the request, personally or by mail. Hearing requests should be received by the SEC by 5:30 p.m. on June 23, 2015, and should be accompanied by proof of service on applicants, in the form of an affidavit or, for lawyers, a certificate of service. Pursuant to Rule 0–5 under the Act, hearing requests should state the nature of the writer's interest, any facts bearing upon the desirability of a hearing on the matter, the reason for the request, and the issues contested. Persons who wish to be notified of a hearing may request notification by writing to the Commission's Secretary.

ADDRESSES: The Commission: Brent J. Fields, Secretary, U.S. Securities and Exchange Commission, 100 F Street NE., Washington, DC 20549–1090.

FOR FURTHER INFORMATION CONTACT: Diane L. Titus at (202) 551–6810, SEC, Division of Investment Management, Chief Counsel's Office, 100 F Street NE., Washington, DC 20549–8010.

First Opportunity Fund Inc. [File No. 811–4605]; Boulder Total Return Fund Inc. [File No. 811–7390]; Denali Fund Inc. [File No. 811–21200]

Summary: Each applicant, a closed-end investment company, seeks an order declaring that it has ceased to be an investment company. Applicants transferred their assets to Boulder Growth & Income Fund, Inc., and on March 20, 2015, applicants made distributions to their shareholders based on net asset value. Expenses of approximately, $229,373, $247,624 and $90,848, respectively, incurred in connection with the reorganizations were paid by applicants.

Filing Date: The application was filed on May 14, 2015.

Applicant's Address: 2344 Spruce St., Ste. A, Boulder, CO 80302.

John Hancock Collateral Investment Trust [File No. 811–22303]

Summary: Applicant seeks an order declaring that it has ceased to be an investment company. By January 31, 2015, all shareholders of applicant had redeemed their shares based on net asset value. Applicant has retained approximately $95,324 in cash to pay outstanding liabilities. Expenses of approximately $20,000 incurred in connection with the liquidation were paid by applicant.

Filing Dates: The application was filed on March 13, 2015, and amended on May 15, 2015.

Applicant's Address: 197 Clarendon St., Boston, MA 02216.

Destra Credit Opportunities Unit Investment Trust [File No. 811–22866]

Summary: Applicant, a unit investment trust, seeks an order declaring that it has ceased to be an investment company. Applicant represents that it will continue to operate in reliance on Section 3(c)(7) of the Act as its outstanding securities are, and following deregistration, will continue to be, owned exclusively by persons who, at the time of acquisition of such securities, are qualified purchasers, and it is not making or proposing to make a public offering of such securities. Applicant further represents that it has notified, or will promptly notify, its beneficial owners that certain legal protections afforded to unitholders under the Act will no longer apply.

Filing Date: The application was filed on April 29, 2015.

Applicant's Address: One North Wacker Dr., 48th Floor, Chicago, IL 60606.

Special Value Opportunities Fund LLC [File No. 811–21603]

Summary: Applicant, a closed-end investment company, seeks an order declaring that it has ceased to be an investment company. Applicant represents that it currently has fewer than 100 beneficial owners of its securities and will continue operation as a private fund in reliance on section 3(c)(1) of the Act. Applicant further represents that it has notified its beneficial owners that certain legal protections offered to shareholders of an investment company registered under the Act will no longer apply.

Filing Date: The application was filed on May 1, 2015.

Applicant's Address: 2951 28th St., Suite 1000, Santa Monica, CA 90405.

Loeb King Trust [File No. 811–22852]

Summary: Applicant seeks an order declaring that it has ceased to be an investment company. On February 25, 2015, applicant made a liquidating distribution to its shareholders, based on net asset value. Expenses incurred in connection with the liquidation were paid by Carl M. Loeb Advisory Partners L.P., applicant's investment adviser.

Filing Date: The application was filed on May 1, 2015.

Applicant's Address: 125 Broad St., 14th Floor, New York, NY 10004.

For the Commission, by the Division of Investment Management, pursuant to delegated authority.

Brent J. Fields,

Secretary.

[FR Doc. 2015–14052 Filed 6–8–15; 8:45 am]

BILLING CODE 8011–01–P

SECURITIES AND EXCHANGE COMMISSION

[Release No. 34–75100; File No. SR–NYSEArca–2015–47]

Self-Regulatory Organizations; NYSE Arca, Inc.; Notice of Filing and Immediate Effectiveness of Proposed Rule Change Relating to Representation Regarding the AdvisorShares WCM/BNY Mellon Focused Growth ADR ETF's Holdings of American Depositary Receipts

June 3, 2015.

Pursuant to section 19(b)(1) of the Securities Exchange Act of 1934 (the ''Act'') [1] and Rule 19b–4 thereunder,[2] notice is hereby given that, on May 27, 2015, NYSE Arca, Inc. (the ''Exchange'' or ''NYSE Arca'') filed with the Securities and Exchange Commission (the ''Commission'') the proposed rule change as described in Items I and II below, which Items have been prepared by the Exchange. The Commission is publishing this notice to solicit comments on the proposed rule change from interested persons.

I. Self-Regulatory Organization's Statement of the Terms of Substance of the Proposed Rule Change

The Exchange proposes to change a representation regarding the AdvisorShares WCM/BNY Mellon Focused Growth ADR ETF's holdings of American Depositary Receipts. Shares of the WCM/BNY Mellon Focused Growth ADR ETF have been approved for listing and trading on the Exchange under NYSE Arca Equities Rule 8.600. The text of the proposed rule change is available on the Exchange's Web site at *www.nyse.com*, at the principal office of the Exchange, and at the Commission's Public Reference Room.

II. Self-Regulatory Organization's Statement of the Purpose of, and Statutory Basis for, the Proposed Rule Change

In its filing with the Commission, the self-regulatory organization included statements concerning the purpose of, and basis for, the proposed rule change and discussed any comments it received on the proposed rule change. The text of those statements may be examined at the places specified in Item IV below. The Exchange has prepared summaries, set forth in sections A, B, and C below, of the most significant parts of such statements.

A. Self-Regulatory Organization's Statement of the Purpose of, and the Statutory Basis for, the Proposed Rule Change

1. Purpose

The Commission has approved a proposed rule change relating to listing and trading on the Exchange of shares (''Shares'') of the AdvisorShares WCM/BNY Mellon Focused Growth ADR ETF (the ''Fund'') under NYSE Arca Equities Rule 8.600, [3] which governs the listing and trading of Managed Fund Shares.[4]

[1] 15 U.S.C.78s(b)(1).

[2] 17 CFR 240.19b–4.

[3] *See* Securities Exchange Act Release No. 62502 (July 15, 2010), 75 FR 42471 (July 21, 2010) (SR–NYSEArca–2010–57) (the ''Prior Order''). The notice with respect to the Prior Order was published in Securities Exchange Act Release No. 62344 (June 21, 2010), 75 FR 37498 (June 29, 2010) (''Prior Notice'' and, together with the Prior Order, the ''Prior Release'').

[4] A Managed Fund Share is a security that represents an interest in an investment company registered under the Investment Company Act of 1940 (15 U.S.C. 80a–1) (''1940 Act'') organized as

Continued

The Fund's Shares are currently listed and traded on the Exchange under NYSE Arca Equities Rule 8.600.

The Shares are offered by AdvisorShares Trust (the ''Trust''), a statutory trust organized under the laws of the State of Delaware and registered with the Commission as an open-end management investment company.[5] The investment adviser to the Fund is AdvisorShares Investments, LLC (the ''Adviser''). WCM Investment Management (''WCM'') is the sub-adviser and portfolio manager to the Fund (''Sub-Adviser'').

According to the Registration Statement, and as stated in the Prior Release, the Fund's investment objective is long-term capital appreciation above international benchmarks such as the BNY Mellon Classic ADR Index and the MSCI EAFE Index. WCM seeks to achieve the Fund's investment objective by selecting a portfolio of U.S. traded securities of non-U.S. organizations included in the BNY Mellon Classic ADR Index. The BNY Mellon Classic ADR Index predominantly includes American Depositary Receipts (''ADRs'') and, in addition, includes other Depositary Receipts (''DRs''), which include Global Depositary Receipts (''GDRs''), Euro Depositary Receipts (''Euro DRs'') and New York Shares (''NYSs'').[6]

The Prior Release stated that the Fund, under normal circumstances, will have at least 80% of its total assets invested in ADRs (the ''80% Representation''). The Fund also may invest in other equity securities, including common and preferred stock, warrants, convertible securities and master limited partnerships. As stated in the Prior Release, the Fund's portfolio consists primarily of ADRs.[7]

The Exchange has notified the Fund that it currently is not in compliance with the 80% Representation.[8] In order to permit the continued listing and trading of Shares of the Fund, the Exchange proposes to amend such statement in the Prior Release to provide that the Fund will invest at least 80% of its total assets in ADRs and other equity securities, including common and preferred stock, warrants, convertible securities and master limited partnerships. However, the Fund's portfolio will consist primarily of ADRs.

As stated in the Second Prior Release, the Fund now may invest in non-U.S. equity securities, subject to a limitation on net assets invested in equity securities whose principal market is not a member of the ISG.[9] Therefore, the Fund, in certain cases, could choose to acquire exposure to non-U.S. equity markets by investing in non-U.S. equities directly rather than by investing in ADRs. Therefore, it is appropriate to reduce the percentage of Fund assets required to be in ADRs. In addition, a reduced threshold for ADR investment would allow the Fund to take advantage of opportunities in the equities markets without being subject to the 80% Representation, in furtherance of the Fund's investment objective. Nevertheless, the Fund's portfolio would continue to consist primarily of ADRs (*i.e.,* more than 50% of the Fund's total assets would be invested in ADRs).

The Exchange notes that the Commission has previously approved similar percentage limitations for other funds listed on the Exchange under NYSE Arca Equities Rule 8.600.[10]

Except for the change described above, all other representations made in the Prior Release and the Second Prior Release remain unchanged.[11] The Fund will continue to comply with all initial and continued listing requirements under NYSE Arca Equities Rule 8.600.

The Exchange represents that the trading in the Shares will be subject to the existing trading surveillances, administered by the Financial Industry Regulatory Authority (''FINRA'') on behalf of the Exchange, which are designed to detect violations of Exchange rules and applicable federal securities laws.[12] The Exchange represents that these procedures are adequate to properly monitor Exchange trading of the Shares in all trading sessions and to deter and detect violations of Exchange rules and federal securities laws applicable to trading on the Exchange. FINRA, on behalf of the Exchange, will communicate as needed regarding trading in the Shares and exchange-listed equity securities (including ADRs) with other markets and other entities that are members of the ISG, and FINRA, on behalf of the Exchange, may obtain trading information regarding trading in the Shares and exchange-listed equity securities (including ADRs) from such markets and other entities. The Exchange may obtain information regarding trading in the Shares and exchange-listed equity securities (including ADRs) from markets and other entities that are members of ISG or with which the Exchange has in place a comprehensive surveillance sharing agreement.[13] In addition, as stated in the Prior Release, investors have ready access to information regarding the Fund's holdings, the Portfolio Indicative Value, the Disclosed Portfolio, and quotation and last sale information for the Shares.

an open-end investment company or similar entity that invests in a portfolio of securities selected by its investment adviser consistent with its investment objectives and policies. In contrast, an open-end investment company that issues Investment Company Units, listed and traded on the Exchange under NYSE Arca Equities Rule 5.2(j)(3), seeks to provide investment results that correspond generally to the price and yield performance of a specific foreign or domestic stock index, fixed income securities index or combination thereof.

[5] The Trust is registered under the 1940 Act. On November 1, 2014, the Trust filed with the Commission an amendment to its registration statement on Form N–1A under the Securities Act of 1933 (15 U.S.C. 77a) and the 1940 Act relating to the Fund (File Nos. 333–157876 and 811–22110) (the ''Registration Statement''). The description of the operation of the Trust and the Fund herein is based, in part, on the Registration Statement. In addition, the Commission has issued an order granting certain exemptive relief to the Trust under the 1940 Act. See Investment Company Act Release No. 29291 (May 28, 2010) (File No. 812–13677) (''Exemptive Order'').

[6] According to the Registration Statement, DRs, which include ADRs, GDRs, Euro DRs and NYSs, are negotiable securities that generally represent a non-U.S. company's publicly traded equity or debt. Depositary Receipts may be purchased in the U.S. secondary trading market. They may trade freely, just like any other security, either on an exchange or in the over-the-counter market. Although typically denominated in U.S. dollars, Depositary Receipts can also be denominated in Euros. Depositary Receipts can trade on all U.S. stock exchanges as well as on many European stock exchanges.

[7] The Prior Release further stated that the Fund will not invest in non-U.S. equity securities outside of U.S. markets. The Exchange recently has filed a proposed rule change pursuant to Rule 19b–4 under the Act that amended such statement in the Prior Release to provide that the Fund may invest in securities outside of U.S. markets, and that not more than 10% of the net assets of the Fund in the aggregate invested in equity securities (excluding non-exchange-traded investment company securities) shall consist of equity securities whose principal market is not a member of the Intermarket Surveillance Group (''ISG'') or is a market with which the Exchange does not have a comprehensive surveillance sharing agreement. *See* Securities Exchange Act Release No. 74271 (February 13, 2015), 80 FR 9301 (February 20, 2015) (SR–NYSEArca–2015–06) (''Second Prior Release'').

[8] The Trust issued a press release, dated March 24, 2015, relating to the non-compliance. The Exchange also has added a ''below compliance'' (''.BC'') indicator to the Fund's trading symbol.

[9] *See* note 7, *supra.*

[10] *See, e.g.,* Securities Exchange Act Release No. 71540 (February 12, 2014) (SR–NYSEArca–2013–138) (order approving listing and trading of shares of iShares Enhanced International Large-Cap ETF and iShares Enhanced International Small-Cap ETF Under NYSE Arca Equities Rule 8.600).

[11] *See* notes 3 and 7, *supra.* All terms referenced but not defined herein are defined in the Prior Release.

[12] FINRA surveils trading on the Exchange pursuant to a regulatory services agreement. The Exchange is responsible for FINRA's performance under this regulatory services agreement.

[13] For a list of the current members of ISG, *see www.isgportal.org.* The Exchange notes that not all of the components of the portfolio for the Fund may trade on exchanges that are members of the ISG or with which the Exchange has in place a comprehensive surveillance sharing agreement.

2. Statutory Basis

The basis under the Act for this proposed rule change is the requirement under section 6(b)(5) [14] that an exchange have rules that are designed to prevent fraudulent and manipulative acts and practices, to promote just and equitable principles of trade, to remove impediments to, and perfect the mechanism of a free and open market and, in general, to protect investors and the public interest.

The Exchange believes that the proposed rule change is designed to prevent fraudulent and manipulative acts and practices in that the Shares are listed and traded on the Exchange pursuant to the initial and continued listing criteria in NYSE Arca Equities Rule 8.600. As noted above, the Fund now may invest in non-U.S. equity securities, subject to a limitation on net assets invested in equity securities whose principal market is not a member of the ISG. Therefore, the Fund, in certain cases, could choose to acquire exposure to non-U.S. equity markets by investing in non-U.S. equities directly rather than by investing in ADRs. Therefore, it is appropriate to reduce the percentage of Fund assets required to be in ADRs. In addition, a reduced threshold for ADR investment would allow the Fund to take advantage of opportunities in the equities markets without being subject to the 80% Representation, in furtherance of the Fund's investment objective. The Fund's portfolio would continue to consist primarily of ADRs (*i.e.,* more than 50% of the Fund's total assets would be invested in ADRs). The Commission has previously approved similar percentage limitations for other funds listed on the Exchange under NYSE Arca Equities Rule 8.600.[15] The Exchange notes that that not more than 10% of the net assets of the Fund in the aggregate invested in equity securities (excluding non-exchange-traded investment company securities) shall consist of equity securities whose principal market is not a member of the ISG or is a market with which the Exchange does not have a comprehensive surveillance sharing agreement. Such a representation assures that most applicable exchange-traded assets of the Fund will be assets whose principal market is an ISG member or a market with which the Exchange has a comprehensive surveillance sharing agreement.

The Exchange has in place surveillance procedures that are adequate to properly monitor trading in the Shares in all trading sessions and to deter and detect violations of Exchange rules and applicable federal securities laws. The Exchange may obtain information via the ISG from other exchanges that are members of ISG or with which the Exchange has entered into a comprehensive surveillance sharing agreement.

The proposed rule change is designed to promote just and equitable principles of trade and to protect investors and the public interest in that the net asset value (''NAV'') per Share is calculated daily and that the NAV and the Disclosed Portfolio is made available to all market participants at the same time. In addition, a large amount of information is publicly available regarding the Fund and the Shares, thereby promoting market transparency. The Portfolio Indicative Value, as defined in NYSE Arca Equities Rule 8.600(c)(3), is disseminated by one or more major market data vendors at least every 15 seconds during the Exchange's Core Trading Session. On a daily basis, the Adviser discloses for each portfolio security or other financial instrument of the Fund the following information: ticker symbol (if applicable), name of security or financial instrument, number of shares or dollar value of financial instruments held in the portfolio, and percentage weighting of the security or financial instrument in the portfolio. The Fund's holdings are disclosed on its Web site daily after the close of trading on the Exchange and prior to the opening of trading on the Exchange the following day. Information regarding market price and trading volume of the Shares is and will be continually available on a real-time basis throughout the day on brokers' computer screens and other electronic services, and quotation and last sale information is available via the Consolidated Tape Association high-speed line. Price information regarding the Fund's equity investments is available from major market data vendors. The intra-day, closing and settlement prices for exchange-listed equity securities held by the Fund are also readily available from the national securities exchanges trading such securities. Trading in Shares of the Fund will be halted if the circuit breaker parameters in NYSE Arca Equities Rule 7.12 have been reached or because of market conditions or for reasons that, in the view of the Exchange, make trading in the Shares inadvisable. Trading in the Shares is subject to NYSE Arca Equities Rule 8.600(d)(2)(D), which sets forth circumstances under which Shares of the Fund may be halted. The Web site for the Fund includes a form of the prospectus for the Fund and additional data relating to NAV and other applicable quantitative information. In addition, as stated in the Prior Notice, investors have ready access to information regarding the Fund's holdings, the Portfolio Indicative Value, the Disclosed Portfolio, and quotation and last sale information for the Shares.

The proposed rule change is designed to perfect the mechanism of a free and open market and, in general, to protect investors and the public interest. As noted above, the Exchange represents that the trading in the Shares is subject to the existing trading surveillances, administered by FINRA on behalf of the Exchange, which are designed to detect violations of Exchange rules and applicable federal securities laws. The Exchange represents that these procedures are adequate to properly monitor Exchange trading of the Shares in all trading sessions and to deter and detect violations of Exchange rules and federal securities laws applicable to trading on the Exchange. FINRA, on behalf of the Exchange, will communicate as needed regarding trading in the Shares and exchange-listed equity securities (including ADRs) with other markets and other entities that are members of the ISG, and FINRA, on behalf of the Exchange, may obtain trading information regarding trading in the Shares and exchange-listed equity securities (including ADRs) from such markets and other entities. In addition, the Exchange may obtain information regarding trading in the Shares and exchange-listed equity securities (including ADRs) from markets and other entities that are members of ISG or with which the Exchange has in place a comprehensive surveillance sharing agreement. The Adviser represents that the proposed change, as described above, is consistent with the Fund's investment objective, and will further assist the Adviser and Sub-Adviser to achieve such investment objective. Such an increase may further the public interest by providing the Fund with additional flexibility to achieve long-term capital appreciation above international benchmarks.

B. Self-Regulatory Organization's Statement on Burden on Competition

The Exchange does not believe that the proposed rule change will impose any burden on competition that is not necessary or appropriate in furtherance of the purpose of the Act. The Exchange believes the proposed rule change is designed to allow the Fund to invest in a broader range of non-U.S. equity

[14] 15 U.S.C. 78f(b)(5).

[15] *See* note 10, *supra.*

securities thereby helping the Fund to achieve its investment objective, and will enhance competition among issues of Managed Fund Shares that invest in non-U.S. equity securities.

C. Self-Regulatory Organization's Statement on Comments on the Proposed Rule Change Received From Members, Participants, or Others

No written comments were solicited or received with respect to the proposed rule change.

III. Date of Effectiveness of the Proposed Rule Change and Timing for Commission Action

Because the proposed rule change does not (i) significantly affect the protection of investors or the public interest; (ii) impose any significant burden on competition; and (iii) become operative for 30 days from the date on which it was filed, or such shorter time as the Commission may designate, if consistent with the protection of investors and the public interest, the proposed rule change has become effective pursuant to section 19(b)(3)(A) of the Act [16] and Rule 19b–4(f)(6) thereunder.[17]

At any time within 60 days of the filing of such proposed rule change, the Commission summarily may temporarily suspend such rule change if it appears to the Commission that such action is necessary or appropriate in the public interest, for the protection of investors, or otherwise in furtherance of the purposes of the Act. If the Commission takes such action, the Commission shall institute proceedings under section 19(b)(2)(B) of the Act [18] to determine whether the proposed rule change should be approved or disapproved.

IV. Solicitation of Comments

Interested persons are invited to submit written data, views, and arguments concerning the foregoing, including whether the proposed rule change is consistent with the Act. Comments may be submitted by any of the following methods:

Electronic Comments

- Use the Commission's Internet comment form (*http://www.sec.gov/rules/sro.shtml*); or
- Send an email to *rule-comments@sec.gov*. Please include File Number SR–NYSEArca–2015–47 on the subject line.

Paper Comments

- Send paper comments in triplicate to Brent J. Fields, Secretary, Securities and Exchange Commission, 100 F Street NE., Washington, DC 20549–1090.

All submissions should refer to File Number SR–NYSEArca–2015–47. This file number should be included on the subject line if email is used. To help the Commission process and review your comments more efficiently, please use only one method. The Commission will post all comments on the Commission's Internet Web site (*http://www.sec.gov/rules/sro.shtml*). Copies of the submission, all subsequent amendments, all written statements with respect to the proposed rule change that are filed with the Commission, and all written communications relating to the proposed rule change between the Commission and any person, other than those that may be withheld from the public in accordance with the provisions of 5 U.S.C. 552, will be available for Web site viewing and printing in the Commission's Public Reference Section, 100 F Street NE., Washington, DC 20549 on official business days between 10:00 a.m. and 3:00 p.m. Copies of the filing will also be available for inspection and copying at the principal office of the Exchange. All comments received will be posted without change; the Commission does not edit personal identifying information from submissions. You should submit only information that you wish to make available publicly. All submissions should refer to File Number SR–NYSEArca–2015–47 and should be submitted on or before June 30, 2015.

For the Commission, by the Division of Trading and Markets, pursuant to delegated authority.[19]

Robert W. Errett,

Deputy Secretary.

[FR Doc. 2015–13986 Filed 6–8–15; 8:45 am]

BILLING CODE 8011–01–P

[16] 15 U.S.C. 78s(b)(3)(A).

[17] 17 CFR 240.19b–4(f)(6). As required under Rule 19b–4(f)(6)(iii), the Exchange provided the Commission with written notice of its intent to file the proposed rule change, along with a brief description and the text of the proposed rule change, at least five business days prior to the date of filing of the proposed rule change, or such shorter time as designated by the Commission.

[18] 15 U.S.C. 78s(b)(2)(B).

[19] 17 CFR 200.30–3(a)(12).

SECURITIES AND EXCHANGE COMMISSION

[Release No. 34–75098; File No. SR–NSX–2015–02]

Self-Regulatory Organizations; National Stock Exchange, Inc.; Notice of Filing and Immediate Effectiveness of Proposed Rule Change To Provide an Expedited Process for Former Equity Trading Permit Holders To Apply for Reinstatement and Register Associated Persons

June 3, 2015.

Pursuant to section 19(b)(1) of the Securities Exchange Act of 1934 (''Exchange Act'' or ''Act'')[1] and Rule 19b–4 thereunder,[2] notice is hereby given that on May 27, 2015, the National Stock Exchange, Inc. (''NSX'' or the ''Exchange'') filed with the Securities and Exchange Commission (''Commission'') the proposed rule change, as described in Items I and II below, which Items have been prepared by the Exchange. The Commission is publishing this notice to solicit comments on the proposed rule change from interested persons.

I. Self-Regulatory Organization's Statement of the Terms of the Substance of the Proposed Rule Change

The Exchange is proposing to amend Exchange Rule 2.5 (Application Procedures for an ETP Holder or to become an Associated Person of an ETP Holder)[3] to add new Interpretations and Policies section .01, entitled ''Expedited Process for Reinstatement as an ETP Holder.'' The Exchange is proposing this amendment to allow the use of an expedited process to facilitate the reinstatement, subject to certain conditions, of former ETP Holders of NSX [4] and to register their Associated Persons.[5] The Exchange's proposal is

[1] 15 U.S.C. 78s(b)(1).

[2] 17 CFR 240.19b–4.

[3] The term ''ETP Holder'' refers to the holder of an Equity Trading Permit, or ''ETP,'' issued by the Exchange for effecting approved securities transactions on the Exchange's trading facilities. An ETP may be issued to a sole proprietor, partnership, corporation, limited liability company or other organization which is a registered broker or dealer pursuant to section 15 of the Act (*See* Exchange Rule 1.5E.(1)).

[4] Pursuant to a rule filing with the Commission, the Exchange ceased trading operations as of the close of business on May 30, 2014. *See* Securities Exchange Act Release No. 72107 (May 6, 2014), 79 FR 27017 (May 12, 2014) (SR–NSX–2014–14). NSX continued to be registered as a national securities exchange and retained its status as a self-regulatory organization. All NSX rules remained in full force and effect after trading on the NSX's trading system ceased.

[5] The terms ''person associated with an ETP Holder'' or ''associated person of an ETP Holder'' mean any partner, officer, director, or branch

designed to facilitate an efficient reinstatement process in connection with a subsequent reopening of trading on the Exchange, after all regulatory approvals are obtained.

The Exchange has designated this rule proposal as ''non-controversial'' pursuant to section 19(b)(3)(A) of the Act[6] and provided the Commission with the notice required by Rule 19b–4(f)(6)(iii) under the Act.[7] The text of the proposed rule change is available on the Exchange's Web site at *www.nsx.com*, at the Exchange's principal office, and at the Commission's public reference room.

II. Self-Regulatory Organization's Statement of the Purpose of, and the Statutory Basis for, the Proposed Rule Change

In its filing with the Commission, the self-regulatory organization included statements concerning the purpose of, and statutory basis for, the proposed rule change and discussed any comments it received on the proposed rule change. The text of those statements may be examined at the places specified in Item IV below. The Exchange has prepared summaries, set forth in sections A, B, and C below, of the most significant parts of such statements.

A. Self -Regulatory Organization's Statement of the Purpose of, and Statutory Basis for, the Proposed Rule Change

1. Purpose

The Exchange is proposing to amend Rule 2.5 to implement, on a temporary basis, an expedited procedure to permit approved ETP Holders in good standing as of the close of business on May 30, 2014, when the Exchange ceased trading operations, to reinstate their ETP Holder status and register with the Exchange each Associated Person of such ETP Holder. As proposed, the Exchange will require that: (i) The ETP Holder using the expedited process is a member of another self-regulatory organization (''SRO''); and (ii) each proposed Associated Person holds an active and recognized securities industry registration.[8] Former ETP Holders seeking reinstatement under the proposed expedited process would use a short-form application to reinstate their ETP Holder status and register Associated Persons.

The Exchange proposes that the expedited procedure for reinstatement as an ETP Holder and registering Associated Persons would be effective for 90 days from the date on which the rule amendment permitting the use of expedited procedure becomes effective. The short-form application that the Exchange proposes for use in connection with the expedited reinstatement process will include an agreement conforming with Rule 2.5(a)(1) through (a)(5).[9] The short form application will also include the Exchange's standard routing agreement. The Exchange may request further documentation, in addition to the short-form application, in order to confirm that a former ETP Holder using the expedited process and any proposed Associated Persons meet the qualification standards set forth in Exchange Rule 2.4 (Restrictions). As part of the expedited application process, the Exchange will review the records of the prospective ETP Holder and each proposed Associated Person maintained by the Central Registration Depository System (''CRD'').[10]

After the expiration of the 90-day period, the expedited process would no longer be available and any former ETP Holder and Associated Person seeking reinstatement after that date would be required to complete a full application. The expedited process will not be available to new ETP applicants (*i.e.,* an applicant that was not an approved ETP Holder in good standing as of May 30, 2014) or to ETP Holders that ceased to be members of another SRO after May 30, 2014. The Exchange will not approve any application unless the prospective ETP Holder is a member of another SRO.

The Exchange's proposal is intended to allow former ETP Holders to reinstate their status and register Associated Persons in an efficient manner that will enable the Exchange to progress toward a reopening of trading as soon as practicable after the Exchange has obtained all of the necessary regulatory approvals to do so. Reinstating ETP Holders and registering their Associated Persons is a critical element of this process from both an organizational and operational standpoint. Before trading on the Exchange can resume, ETP Holders will need to re-establish and test their connectivity. The Exchange will need to test its systems to confirm that the functionality to process, route and execute orders and issue reports to customers, which has not been modified since May 30, 2014, will continue to operate without incident upon a resumption of trading on the Exchange. Given these imperatives, the Exchange believes that it is important to effectuate the reinstatement of qualified former ETP Holders and the registration of their Associated Persons as quickly and efficiently as possible.

The Exchange submits that its proposal does not present any significant regulatory risk. Prior to May 30, 2014, every ETP Holder was a member of another SRO with oversight responsibility, and the Exchange will not approve any ETP Holder application unless the applicant is a current member of another SRO. The short form application requires each prospective ETP Holder to identify its Designated Examining Authority (''DEA''). The expedited process proposed in this filing will only be available to approved ETP Holders in good standing as of May 30, 2014, each of which had previously been approved by the Exchange through its regular application process pursuant to Rule 2.5. Further, the Exchange will not approve any proposed Associated Person unless such person holds an active and recognized securities industry registration and meets the requirements of Rule 2.4 (Restrictions).

The Exchange notes that the Commission has approved the use of an expedited membership approval process and a short-form application in other

manager of an ETP Holder (or any person occupying a similar status or performing similar functions), any person directly or indirectly controlling, controlled by, or under common control with an ETP Holder, or any employee of such ETP Holder, except that any person associated with an ETP Holder whose functions are solely clerical or ministerial shall not be included in the meaning of such terms. *See* Exchange Rule 1.5P.(1).

[6] 15 U.S.C. 78s(b)(3)(A).

[7] 17 CFR 240.19b–4(f)(6)(iii).

[8] *See* footnote 4, *supra.* As provided in the Exchange's rule filing to cease trading operations on the Exchange as of May 30, 2014, all ETPs terminated automatically as of that date.

[9] Exchange Rule 2.5 (a)(1) through (a)(5) require [sic] that applications for an ETP contain certain agreements, including, inter alia: an agreement by the applicant to adhere to the provisions of the Exchange's amended certificate of incorporation, its by-laws, the Exchange Rules, the policies, interpretations and guidelines of the Exchange and all orders and decisions of the Exchange's Board of Directors; an agreement to pay dues, assessments and other charges in the manner and amount fixed by the Exchange; an agreement that the Exchange, its officers, employees and members of the Board and of any committee shall not be liable, except for willful malfeasance, to the applicant or to any other person for any action taken by such director, officer of member in his official capacity, or by any employee while acting within the scope of his employment, in connection with the administration or enforcement of any of the provisions of the Exchange's by-laws, its Rules, policies, interpretations or guidelines of the Exchange or of any penalty imposed by the exchange, its Board or any duly authorized committee; an agreement to maintain and make available to the Exchange, its authorized employees and its Board or committee members such books and records as may be required to be maintained by the Commission or the Exchange Rules; and such other reasonable information with respect to the applicant as the Exchange may require.

[10] The Financial Industry Regulatory Authority (''FINRA'') operates the CRD System.

situations where the facts and circumstances did not justify the time and administrative costs inherent in completing and processing the regular application to become a member of a national securities exchange. In the past, such situations have involved the formation of a new exchange that is an affiliate of an existing exchange and the members of the existing exchange are permitted to become members of the newly-formed exchange through an expedited process, using a short-form application.[11] Use of an expedited process in that circumstance was appropriate since the applicants for membership on the new exchange had already been approved as members of the affiliated exchange. The Exchange submits that using an expedited process and a short-form application is similarly appropriate in this case, where the Exchange is seeking to employ an efficient and cost-effective means of reinstating previously-approved ETP Holders and registering their Associated Persons.

2. Statutory Basis

The Exchange believes the proposed rule change is consistent with the Exchange Act and the rules and regulations thereunder applicable to the Exchange and, in particular, the requirements of section 6(b) of the Exchange Act.[12] Pursuant to section 6(b)(2) of the Act,[13] and subject to the conditions set forth in section 6(c) of the Act,[14] in its capacity as a registered national securities exchange, NSX's rules must provide that any registered broker-dealer may become an ETP Holder and any person may become an Associated Person thereof. Under section 6(c) of the Act, the Exchange must deny ETP Holder status to any person, other than a natural person, that is not a registered broker or dealer, any natural person that is not, or is not associated with, a registered broker or dealer, and registered broker-dealers that do not satisfy certain standards, such as financial responsibility or operational capacity. As a registered national securities exchange, NSX must independently determine if an applicant satisfies the standards set forth in the Act and in the Exchange's rules.

The Exchange submits that its proposal for an expedited approval process for former ETP Holders and Associated Persons thereof is consistent with its obligations as a registered national securities exchange under the Exchange Act. The expedited process would only be available to ETP Holders that were in good standing as of May 30, 2014; all of such ETP Holders had previously been approved by the Exchange under its regular application process as set forth in Rule 2.5.[15] As part of its review process in connection with submitted ''waive-in'' applications, the Exchange will review the CRD records for both the ETP Holder applicant and proposed Associated Persons, and will request additional information as necessary to assure that they continue to meet the eligibility requirements set forth in the Ace [sic] and in the Exchange's rules.

The Exchange further believes that its proposal is consistent with the requirements of section 6(b)(5)[16] that the rules of an exchange be designed, among other things, to promote just and equitable principles of trade, to foster cooperation and coordination with persons engaged in regulating, clearing, settling, processing information with respect to, and facilitating transactions in securities, to remove impediments to and perfect the mechanism of a free and open market and a national market system, and, in general, to protect investors and the public interest. Additionally, the Exchange believes the proposed rule change is consistent with the section 6(b)(5) requirement that the rules of an exchange not be designed to permit unfair discrimination between customers, issuers, brokers, or dealers.

The Exchange believes that the proposed expedited process will operate to reduce the time and administrative costs normally incurred by both ETP Holders and the Exchange in processing applications to become ETP Holders and registering their Associated Persons. The Exchange further believes that its proposal will thus promote just and equitable principles of trade and remove impediments to and perfect the mechanism of a free and open market and a national market system. The Exchange's proposal will be available to all ETP Holders in good standing as of May 30, 2014 that seek to reinstate their status as ETP Holders of NSX, thus meeting the requirement of section 6(b)(5) that the Exchange's rules not be designed to permit unfair discrimination between customers, issuers, brokers or dealers.

Additionally, the Exchange notes that its proposed expedited procedure for reinstatement will have duration of 90 days from the date that the instant rule change becomes effective. This is consistent with the approach in other instances where national securities exchanges used an expedited application process for a limited purpose and a similar time frame, after which the expedited process was no longer available. The Exchange believes that by utilizing an expedited process that has precedent in both its application and its time duration with the process used by other national securities exchanges, it is fulfilling the requirement of section 6(b)(5) of the Act that its rules foster cooperation and coordination with persons engaged in, among other things, regulating and processing information with respect to, and facilitating transactions in securities.

B. Self-Regulatory Organization's Statement on Burden on Competition

The Exchange believes that the proposed rule change is consistent with section 6(b)(8) of the Act[17] in that it will not impose any burden on competition that is not necessary or appropriate in furtherance of the purposes of the Act. The Exchange's proposed expedited process will only be available to broker-dealers that were registered ETP Holders as of the date the Exchange ceased trading operations. Allowing for an expedited and efficient process for reinstatement of ETP Holders and registering their Associated Persons will facilitate the process of preparing the Exchange for a resumption of trading, thereby providing another competitive trading venue for market participants. The Exchange notes that new ETP Holder applicants would not be eligible for the expedited process, nor would any otherwise eligible former ETP Holder that sought reinstatement after the 90-day time period for use of the expedited process had elapsed. Associated Persons that an ETP Holder seeks to register through the expedited process must hold an active and recognized securities industry registration and meet the requirements of Rule 2.4(e) [sic]. The Exchange submits that these factors indicate that its proposal will not impose any unnecessary or inappropriate burden on competition and therefore is consistent with the Act.

[11] *See, e.g.,* In the Matter of the Applications of EDGX Exchange, Inc., and EDGA Exchange, Inc. for Registration as National Securities Exchanges: Findings, Opinion, and Order of the Commission, Exchange Act Release No. 61698 (March 12, 2010), 75 FR 13151 (March 18, 2010) (File Nos. 10–194 and 10–196); In the Matter of the Application of BATS Exchange, Inc. for Registration as a National Securities Exchange; Findings, Opinion, and Order of the Commission, Exchange Act Release No. 58375 (August 18, 2008), 73 FR 49498 (August 21, 2008) (File No. 10–182).

[12] 15 U.S.C. 78f(b).

[13] 15 U.S.C. 78f(b)(2).

[14] 15 U.S.C. 78f(c).

[15] *See* footnote 9, *supra.*

[16] 15 U.S.C. 78f(b)(5).

[17] 15 U.S.C. 78f(b)(8).

C. Self-Regulatory Organization's Statement on Comments on the Proposed Rule Change Received From Members, Participants or Others

The Exchange has not solicited or received comments on the proposed rule change from market participants or others.

III. Date of Effectiveness of the Proposed Rule Change and Timing for Commission Action

Because the proposed rule change does not (i) significantly affect the protection of investors or the public interest; (ii) impose any significant burden on competition; and (iii) become operative for 30 days from the date on which it was filed, or such shorter time as the Commission may designate, if consistent with the protection of investors and the public interest, the proposed rule change has become effective pursuant to section 19(b)(3)(A) of the Act [18] and Rule 19b–4(f)(6) thereunder.[19]

At any time within 60 days of the filing of such proposed rule change, the Commission summarily may temporarily suspend such rule change if it appears to the Commission that such action is necessary or appropriate in the public interest, for the protection of investors, or otherwise in furtherance of the purposes of the Act. If the Commission takes such action, the Commission shall institute proceedings under section 19(b)(2)(B) of the Act [20] to determine whether the proposed rule change should be approved or disapproved.

IV. Solicitation of Comments

Interested persons are invited to submit written data, views, and arguments concerning the foregoing, including whether the proposed rule change is consistent with the Act. Comments may be submitted by any of the following methods:

Electronic Comments

- Use the Commission's Internet comment form (*http://www.sec.gov/rules/sro.shtml*); or
- Send an email to *rule-comments@sec.gov*. Please include File Number SR–NSX–2015–02 on the subject line.

Paper Comments

- Send paper comments in triplicate to Secretary, Securities and Exchange Commission, 100 F Street NE., Washington, DC 20549–1090.

All submissions should refer to File Number SR–NSX–2015–02. This file number should be included on the subject line if email is used. To help the Commission process and review your comments more efficiently, please use only one method. The Commission will post all comments on the Commission's Internet Web site (*http://www.sec.gov/rules/sro.shtml*). Copies of the submission, all subsequent amendments, all written statements with respect to the proposed rule change that are filed with the Commission, and all written communications relating to the proposed rule change between the Commission and any person, other than those that may be withheld from the public in accordance with the provisions of 5 U.S.C. 552, will be available for Web site viewing and printing in the Commission's Public Reference Room, 100 F Street NE., Washington, DC 20549, on official business days between the hours of 10:00 a.m. and 3:00 p.m. Copies of such filing will also be available for inspection and copying at the principal office of the Exchange. All comments received will be posted without change; the Commission does not edit personal identifying information from submissions. You should submit only information that you wish to make available publicly. All submissions should refer to File Number SR–NSX–2015–02 and should be submitted on or before June 30, 2015.

For the Commission, by the Division of Trading and Markets, pursuant to delegated authority.[21]

Robert W. Errett,

Deputy Secretary.

[FR Doc. 2015–13985 Filed 6–8–15; 8:45 am]

BILLING CODE 8011–01–P

[18] 15 U.S.C. 78s(b)(3)(A).

[19] 17 CFR 240.19b–4(f)(6). As required under Rule 19b–4(f)(6)(iii), the Exchange provided the Commission with written notice of its intent to file the proposed rule change, along with a brief description and the text of the proposed rule change, at least five business days prior to the date of filing of the proposed rule change, or such shorter time as designated by the Commission.

[20] 15 U.S.C. 78s(b)(2)(B).

[21] 17 CFR 200.30–3(a)(12).

SMALL BUSINESS ADMINISTRATION

Data Collection Available for Public Comments

ACTION: 60-day notice and request for comments.

SUMMARY: The Small Business Administration (SBA) intends to request approval, from the Office of Management and Budget (OMB) for the new collection of information described below. The Paperwork Reduction Act (PRA) of 1995, 44 U.S.C. Chapter 35 requires federal agencies to publish a notice in the **Federal Register** concerning each proposed collection of information to OMB, and to allow 60 days for the public to comment in response to the notice. This notice complies with such requirements and announces SBA's proposal to conduct a survey of the small businesses who participate in SBA's Regional Innovation Clusters (RIC) program.

DATES: Submit comments on or before August 10, 2015.

ADDRESSES: Send all comments to Brittany Borg, Contracting Officer Representative, Office of Entrepreneurial Development, U.S. Small Business Administration, 409 3rd Street SW. Suite 6200, Washington, DC 20416.

FOR FURTHER INFORMATION CONTACT: Brittany Borg, Contracting Officer Representative, 202–401–1354, *oedsurvey@sba.gov* or Curtis B. Rich, Management Analyst, 202–205–7030, *curtis.rich@sba.gov*

SUPPLEMENTARY INFORMATION: This is a request for the collection of new information.

In October 2014, a new cohort of sites was added to the Regional Innovation Clusters (RIC) initiative, which was originally started in October 1, 2010 by the Small Business Administration (SBA)'s Office of Entrepreneurial Development. Through this initiative, organizations in 11 communities across the U.S. have been selected to provide industry-specific assistance to small businesses, and to develop industry relationships and supply chains within their regions. Clusters—geographically concentrated groups of interconnected businesses, suppliers, service providers, and associated institutions in a particular industry or field—act as a networking hub to convene a number of resources to help navigate the funding, procurement, and supply-chain opportunities in a specific industry.

SBA is conducting an evaluation of the Regional Innovation Clusters initiative to determine how the clusters have developed, the type and volume of services they provided to small businesses, client perceptions of the program, and the various outcomes related to their existence, including collaboration among firms, innovation, and small business growth. Small business growth will be compared to the overall growth of firms in those same regions and industries. This evaluation will also include lessons learned and success stories. SBA proposes the use of

three instruments for data collection and analysis of three distinct populations. These instruments are: (1) Small Business Survey, (2) Large Organization Survey and (3) Cluster Administrator Survey. In addition, SBA plans to interview each of the 11 cluster administrators several times a year regarding program impact and successes or challenges, and to obtain clarifications on information provided in quarterly reports. Each of the proposed surveys will be administered electronically and will contain both open- and close-ended questions. The information collected and analyzed from these instruments will contribute to monitoring performance metrics and program goals, as well as recommendations on improving program practices.

(a) *Solicitation of Public Comments:* SBA is requesting comments on (a) whether the collection of information is necessary for the agency to properly perform its functions; (b) whether the burden estimates are accurate; (c) whether there are ways to minimize the burden, including through the use of automated techniques or other forms of information technology; and (d) whether there are ways to enhance the quality, utility, and clarity of the information collected.

(b) *Summary of Information Collection:*

Small Business Survey

Description of Respondents: small businesses participating in the 11 clusters.

Estimated Number of Respondents: 410.

Estimated Annual Responses: 410.

Estimated Annual Hour Burden: 218.

Large Organization Survey

Description of Respondents: large organizations (*e.g.,* universities, public sector agencies) participating in one of the 11 clusters.

Estimated Number of Respondents: 195.

Estimated Annual Responses: 195.

Estimated Annual Hour Burden: 71.

Cluster Administrator Survey

Description of Respondents: administration team of one of the 11 clusters.

Estimated Number of Respondents: 11.

Estimated Annual Responses: 11.

Estimated Annual Hour Burden: 80.

Curtis B. Rich,

Management Analyst.

[FR Doc. 2015–14003 Filed 6–8–15; 8:45 am]

BILLING CODE P

SMALL BUSINESS ADMINISTRATION

[Disaster Declaration #14336 and #14337]

Texas Disaster #TX–00448

AGENCY: U.S. Small Business Administration.

ACTION: Notice.

SUMMARY: This is a Notice of the Presidential declaration of a major disaster for Public Assistance Only for the State of Texas (FEMA–4223–DR), dated 05/29/2015.

Incident: Severe Storms, Tornadoes, Straight Line Winds and Flooding.

Incident Period: 05/04/2015 and continuing.

Effective Date: 05/29/2015.

Physical Loan Application Deadline Date: 07/28/2015.

Economic Injury (EIDL) Loan Application Deadline Date: 02/29/2016.

ADDRESSES: Submit completed loan applications to: U.S. Small Business Administration, Processing and Disbursement Center, 14925 Kingsport Road, Fort Worth, TX 76155.

FOR FURTHER INFORMATION CONTACT: A. Escobar, Office of Disaster Assistance, U.S. Small Business Administration, 409 3rd Street SW., Suite 6050, Washington, DC 20416.

SUPPLEMENTARY INFORMATION: Notice is hereby given that as a result of the President's major disaster declaration on 05/29/2015, Private Non-Profit organizations that provide essential services of governmental nature may file disaster loan applications at the address listed above or other locally announced locations.

The following areas have been determined to be adversely affected by the disaster:

Primary Counties: Cooke, Gaines, Grimes, Harris, Hays, Navarro, Van Zandt

The Interest Rates are:

	Percent
For Physical Damage:	
Non-Profit Organizations With Credit Available Elsewhere ...	2.625
Non-Profit Organizations Without Credit Available Elsewhere	2.625
For Economic Injury:	
Non-Profit Organizations Without Credit Available Elsewhere	2.625

The number assigned to this disaster for physical damage is 14336B and for economic injury is 14337B.

(Catalog of Federal Domestic Assistance Numbers 59002 and 59008)

James E. Rivera,

Associate Administrator for Disaster Assistance.

[FR Doc. 2015–14006 Filed 6–8–15; 8:45 am]

BILLING CODE 8025–01–P

SMALL BUSINESS ADMINISTRATION

[Disaster Declaration #14334 and #14335]

Texas Disaster #TX–00447

AGENCY: U.S. Small Business Administration.

ACTION: Notice.

SUMMARY: This is a Notice of the Presidential declaration of a major disaster for the State of Texas (FEMA–4223–DR), dated 05/29/2015.

Incident: Severe Storms, Tornadoes, Straight Line Winds and Flooding.

Incident Period: 05/04/2015 and continuing.

Effective Date: 05/29/2015.

Physical Loan Application Deadline Date: 07/28/2015.

Economic Injury (EIDL) Loan Application Deadline Date: 02/29/2016.

ADDRESSES: Submit completed loan applications to: U.S. Small Business Administration, Processing and Disbursement Center, 14925 Kingsport Road, Fort Worth, TX 76155.

FOR FURTHER INFORMATION CONTACT: A. Escobar, Office of Disaster Assistance, U.S. Small Business Administration, 409 3rd Street SW., Suite 6050, Washington, DC 20416.

SUPPLEMENTARY INFORMATION: Notice is hereby given that as a result of the President's major disaster declaration on 05/29/2015, applications for disaster loans may be filed at the address listed above or other locally announced locations.

The following areas have been determined to be adversely affected by the disaster:

Primary Counties (Physical Damage and Economic Injury Loans): Harris, Hays, Van Zandt

Contiguous Counties (Economic Injury Loans Only):

Texas: Blanco, Brazoria, Caldwell, Chambers, Comal, Fort Bend, Galveston, Guadalupe, Henderson, Hunt, Kaufman, Liberty, Montgomery, Rains, Smith, Travis, Waller, Wood

The Interest Rates are:

	Percent
For Physical Damage:	
Homeowners With Credit Available Elsewhere	3.375

	Percent
Homeowners Without Credit Available Elsewhere	1.688
Businesses With Credit Available Elsewhere	6.000
Businesses Without Credit Available Elsewhere	4.000
Non-Profit Organizations With Credit Available Elsewhere	2.625
Non-Profit Organizations Without Credit Available Elsewhere	2.625
For Economic Injury:	
Businesses & Small Agricultural Cooperatives Without Credit Available Elsewhere	4.000
Non-Profit Organizations Without Credit Available Elsewhere	2.625

The number assigned to this disaster for physical damage is 14334B and for economic injury is 143350.

(Catalog of Federal Domestic Assistance Numbers 59002 and 59008)

James E. Rivera,

Associate Administrator for Disaster Assistance.

[FR Doc. 2015–14004 Filed 6–8–15; 8:45 am]

BILLING CODE 8025–01–P

DEPARTMENT OF TRANSPORTATION

Office of the Secretary of Transportation

Notice of Funding Availability for the Small Business Transportation Resource Center Program

AGENCY: Office of the Secretary of Transportation (OST), Office of Small and Disadvantaged Business Utilization (OSDBU), Department of Transportation (DOT).

ACTION: Notice of Funding Availability for the Central Region SBTRC.

SUMMARY: The Department of Transportation (DOT), Office of the Secretary (OST), Office of Small and Disadvantaged Business Utilization (OSDBU) announces the opportunity for; (1) business centered community-based organizations; (2) transportation-related trade associations; (3) colleges and universities; (4) community colleges or; (5) chambers of commerce, registered with the Internal Revenue Service as 501 C(6) or 501 C(3) tax-exempt organizations, to compete for participation in OSDBU's Small Business Transportation Resource Center (SBTRC) program in the Central Region (Arkansas, Kansas, Missouri and Mississippi).

OSDBU will enter into Cooperative Agreements with these organizations to provide outreach to the small business community in their designated region and provide financial and technical assistance, business training programs, business assessment, management training, counseling, marketing and outreach, and the dissemination of information, to encourage and assist small businesses to become better prepared to compete for, obtain, and manage DOT funded transportation-related contracts and subcontracts at the federal, state and local levels. Throughout this notice, the term ''small business'' will refer to: 8(a), small disadvantaged businesses (SDB), disadvantaged business enterprises (DBE), women owned small businesses (WOSB), HubZone, service disabled veteran owned businesses (SDVOB), and veteran owned small businesses (VOSB). Throughout this notice, ''transportation-related'' is defined as the maintenance, rehabilitation, restructuring, improvement, or revitalization of any of the nation's modes of transportation.

Funding Opportunity Number: USDOT–OST–OSDBU/SBTRCCENTRAL2015–l.

Catalog of Federal Domestic Assistance (CFDA) Number: 20.910 Assistance to small and disadvantaged businesses.

Type of Award: Cooperative Agreement Grant.

Award Ceiling: $170,000.

Award Floor: $155,000.

Program Authority: DOT is authorized under 49 U.S.C. § 332 (b)(4), (5) & (7) to design and carry out programs to assist small disadvantaged businesses in getting transportation-related contracts and subcontracts; develop support mechanisms, including management and technical services, that will enable small disadvantaged businesses to take advantage of those business opportunities; and to make arrangements to carry out the above purposes.

DATES: Complete Proposals must be electronically submitted to OSDBU via email on or before August 8, 2015, 6:00pm Eastern Standard Time (EST). Proposals received after the deadline will be considered non-responsive and will not be reviewed. The applicant is advised to request delivery receipt notification for email submissions. DOT plans to give notice of award for the competed region on or before August 26, 2015, by 6:00pm (EST).

ADDRESSES: Applications must be electronically submitted to OSDBU via email at *SBTRC@dot.gov* and the OSDBU Regional Assistance Division Manager, Michelle Harris, at *Michelle.Harris@dot.gov* (copied).

FOR FURTHER INFORMATION CONTACT: For further information concerning this notice, contact Mr. Adam Dorsey, Program Assistant, U.S. Department of Transportation, Office of Small and Disadvantaged Business Utilization, 1200 New Jersey Avenue SE., Washington, DC, 20590. Telephone: (202) 366–1930. Email: *sbtrc@dot.gov*

SUPPLEMENTARY INFORMATION:

Table of Contents

1. Introduction
   1.1 Background
   1.2 Program Description and Goals
   1.3 Description of Competition
   1.4 Duration of Agreements
   1.5 Authority
   1.6 Eligibility Requirements
2. Program Requirements
   2.1 Recipient Responsibilities
   2.2 Office of Small and Disadvantaged Business Utilization Responsibilities
3. Submission of Proposals
   3.1 Format for Proposals
   3.2 Address, Number of Copies, Deadline for Submission
4. Selection Criteria
   4.1 General Criteria
   4.2 Scoring of Applications
   4.3 Conflicts of Interest
   Format for Proposals- Appendix A

Full Text of Announcement

I. Introduction

1.1 Background

The DOT established OSDBU in accordance with Public Law 95–507, an amendment to the Small Business Act and the Small Business Investment Act of 1958. The mission of OSDBU at DOT is to ensure that the small and disadvantaged business policies and goals of the Secretary of Transportation are developed and implemented in a fair, efficient and effective manner to serve small and disadvantaged businesses throughout the country. The OSDBU also administers the provisions of Title 49, Section 332, the Minority Resource Center (MRC) which includes the duties of advocacy, outreach and financial services on behalf of small and disadvantaged business and those certified under CFR 49 parts 23 and or 26 as Disadvantaged Business Enterprises (DBE) and the development of programs to encourage, stimulate, promote and assist small businesses to become better prepared to compete for, obtain and manage transportation-related contracts and subcontracts.

The Regional Assistance Division of OSDBU, through the SBTRC program, allows OSDBU to partner with local organizations to offer a comprehensive delivery system of business training, technical assistance and dissemination of information, targeted towards small

business transportation enterprises in their regions.

1.2 Program Description and Goals

The national SBTRC program utilizes Cooperative Agreements with chambers of commerce, trade associations, educational institutions and business-centered community based organizations to establish SBTRCs to provide business training, technical assistance and information to DOT grantees and recipients, prime contractors and subcontractors. In order to be effective and serve their target audience, the SBTRCs must be active in the local transportation community in order to identify and communicate opportunities and provide the required technical assistance. SBTRCs must already have, or demonstrate the ability to, establish working relationships with the state and local transportation agencies and technical assistance agencies (*i.e.* The U.S. Department of Commerce's Minority Business Development Centers (MBDCs), Small Business Development Centers (SBDCs), and Procurement Technical Assistance Centers (PTACs), SCORE and State DOT highway supportive services contractors in their region. Utilizing these relationships and their own expertise, the SBTRCs are involved in activities such as information dissemination, small business counseling, and technical assistance with small businesses currently doing business with public and private entities in the transportation industry.

Effective outreach is critical to the success of the SBTRC program. In order for their outreach efforts to be effective, SBTRCs must be familiar with DOT's Operating Administrations, its funding sources, and how funding is awarded to DOT grantees, recipients, contractors, subcontractors, and its financial assistance programs. SBTRCs must provide outreach to the regional small business transportation community to disseminate information and distribute DOT-published marketing materials, such as Short Term Lending Program (STLP) Information, Bonding Education Program (BEP) information, SBTRC brochures and literature, DOT Procurement Forecasts; Contracting with DOT booklets, Women and Girls in Transportation Initiative (WITI) information, and any other materials or resources that DOT or OSDBU may develop for this purpose. To maximize outreach, the SBTRC may be called upon to participate in regional and national conferences and seminars. Quantities of DOT publications for on-hand inventory and dissemination at conferences and seminars will be available upon request from the OSDBU office.

1.3 Description of Competition

The purpose of this Request For Proposal (RFP) is to solicit proposals from transportation-related trade associations, chambers of commerce, community based entities, colleges and universities, community colleges, and any other qualifying transportation-related non-profit organizations with the desire and ability to partner with OSDBU to establish and maintain an SBTRC.

It is OSDBU's intent to award a Cooperative Agreement to one organization in the Central Region, from herein referred to as ''region'', in this solicitation. However, if warranted, OSDBU reserves the option to make multiple awards to selected partners. OSDBU also reserves the right to modify geographical area covered by the Central Region SBTRC. Proposals submitted for a region must contain a plan to service the states throughout the Central Region (Arkansas, Kansas, Missouri and Mississippi), not just the state or immediate local geographical area where the SBTRC is headquartered. The SBTRC headquarters must be established in one of the designated states within the Central Region (Arkansas, Kansas, Missouri and Mississippi).

SBTRC Region Competed in This Solicitation:

Central Region (Arkansas, Kansas, Missouri and Mississippi)

Program requirements and selection criteria, set forth in Sections 2 and 4 respectively, indicate that the OSDBU intends for the SBTRC to be multidimensional; that is, the selected organization must have the capacity to effectively access and provide supportive services to the broad range of small businesses within the respective geographical region. To this end, the SBTRC must be able to demonstrate that they currently have established relationships within each state in the geographic region with whom they may coordinate and establish effective networks with DOT grant recipients and local/regional technical assistance agencies to maximize resources.

Cooperative agreement awards will be distributed to the region(s) as follows:

Central Region Ceiling: $170,000 per year; Floor: $155,000 per year

Cooperative agreement awards by region are based upon an analysis of DBEs, Certified Small Businesses and US DOT transportation dollars in each region.

It is OSDBU's intent to maximize the benefits received by the small business transportation community through the SBTRC. Funding will reimburse an on-site Project Director for *100%* of salary plus fringe benefits, an on-site Executive Director up to 20% of salary plus fringe benefits, up to 100% of a Project Coordinator salary plus fringe benefits, the cost of designated SBTRC space, other direct costs, and all other general and administrative expenses. Selected SBTRC partners will be expected to provide in-kind administrative support. Submitted proposals must contain an alternative funding source with which the SBTRC will fund administrative support costs. Preference will be given to proposals containing in-kind contributions for the Project Director, the Executive Director, the Project Coordinator, cost of designated SBTRC space, other direct costs, and all other general and administrative expenses. The SBTRC will furnish all labor, facilities and equipment to perform the services described in this announcement.

1.4 Duration of Agreements

The cooperative agreement will be awarded for a period of 12 months (one year) with options for two (2) additional one year periods, at the discretion of OSDBU. OSDBU will notify the SBTRC of our intention to exercise an option year or not to exercise an option year 30 days in advance of expiration of the current year. Upon exercising the first year option year of the Cooperative Agreement, OSDBU will renew the SBTRC with a 3% funding increase. Upon exercising the second option year, OSDBU will renew the SBTRC with a 1% increase from the first option year.

1.5 Authority

DOT is authorized under 49 U.S.C. § 332 (b) (4), (5) & (7) to design and carry out programs to assist small disadvantaged businesses in getting transportation-related contracts and subcontracts; develop support mechanisms, including management and technical services, that will enable small disadvantaged businesses to take advantage of those business opportunities; and to make arrangements to carry out the above purposes.

1.6 Eligibility Requirements

To be eligible, an organization must be an established, nonprofit, community-based organization, transportation-related trade association, chamber of commerce, college or university, community college, and any other qualifying transportation-related non-profit organization which has the documented experience and capacity

necessary to successfully operate and administer a coordinated delivery system that provides access for small businesses to prepare and compete for transportation-related contracts. In addition, to be eligible, the applicant organization must:

(A) Be an established 501 C (3) or 501 C (6) tax-exempt organization and provide documentation as verification. No application will be accepted without proof of tax-exempt status;

(B) Have at least one year of documented and continuous experience prior to the date of application in providing advocacy, outreach, and technical assistance to small businesses within the region in which proposed services will be provided. Prior performance providing services to the transportation community is preferable, but not required; and

(C) Have an office physically located within the proposed city in the designated headquarters state in the region for which they are submitting the proposal that is readily accessible to the public.

2. Program Requirements

2.1 Recipient Responsibilities

(3) Assessments, Business Analyses

1. Conduct an assessment of small businesses in the SBTRC region to determine their training and technical assistance needs, and use information that is available at no cost to structure programs and services that will enable small businesses to become better prepared to compete for and receive transportation-related contract awards.

2. Contact other federal, state and local government agencies, such as the U.S. Small Business Administration (SBA), state and local highway agencies, state and local airport authorities, and transit authorities to identify relevant and current information that may support the assessment of the regional small business transportation community needs.

(B) General Management & Technical Training and Assistance

3. Utilize OSDBU's Intake Form to document each small business assisted by the SBTRC and type of service(s) provided. A complete list of businesses that have filled out the form shall be submitted as part of the SBTRC report, submitted via email to the Regional Assistance Division on a regular basis (using the SBTRC Report). This report will detail SBTRC activities and performance results. The data provided must be supported by the narrative (if asked).

2. Ensure that an array of information is made available for distribution to the small business transportation community that is designed to inform and educate the community on DOT/OSDBU services and opportunities.

3. Coordinate efforts with OSDBU in order to maintain an on-hand inventory of DOT/OSDBU informational materials for general dissemination and for distribution at transportation-related conferences and other events.

I Business Counseling

3. Collaborate with agencies, such as State, Regional, and Local Transportation Government Agencies, SBA, U.S. Department of Commerce's Minority Business Development Centers (MBDCs), Service Corps of Retired Executives (SCORE), Procurement Technical Assistance Centers (PTACs), and Small Business Development Centers (SBDCs), to offer a broad range of counseling services to transportation related small business enterprises.

2. Create a technical assistance plan that will provide each counseled participant with the knowledge and skills necessary to improve the management of their own small business to expand their transportation related contracts and subcontracts portfolio.

3. Provide a minimum of *20 hours* of individual or group counseling sessions to small businesses per month. This counseling includes in-person meetings or over the phone, and does not include any time taken to do email correspondence.

(D) Planning Committee

1. Establish a Regional Planning Committee consisting of at least 10 members that includes representatives from the regional community and federal, state, and local agencies. The highway, airport, and transit authorities for the SBTRC's headquarters state must have representation on the planning committee. This committee shall be established no later than 60 days after the execution of the Cooperative agreement between the OSDBU and the selected SBRTC.

2. Provide a forum for the federal, state, and local agencies to disseminate information about upcoming DOT procurements and SBTRC activities.

3. Hold either monthly or quarterly meetings at a time and place agreed upon by SBTRC and planning committee members (conference calls and/or video conferences are acceptable).

4. Use the initial session hosted by the SBTRC to explain the mission of the committee and identify roles of the staff and the members of the group.

5. Responsibility for the agenda and direction of the Planning Committee should be handled by the SBTRC Project Director or his/her designee.

I Outreach Services/Conference Participation

3. Utilize the services of the System for Award Management (SAM) and other sources to construct a database of regional small businesses that currently or may in the future participate in DOT direct and DOT funded transportation related contracts, and make this database available to OSDBU, upon request.

2. Utilize the database of regional transportation-related small businesses to match opportunities identified through the planning committee forum, FedBiz Opps (a web-based system for posting solicitations and other Federal procurement-related documents on the Internet), and other sources to eligible small businesses and inform the small business community about those opportunities.

3. Develop a ''targeted'' database of firms (100–150) that have the capacity and capabilities, and are ready, willing and able to participate in DOT contracts and subcontracts immediately. This control group will receive ample resources from the SBTRC, *i.e.,* access to working capital, bonding assistance, business counseling, management assistance and direct referrals to DOT agencies at the state and local levels, and to prime contractors as effective subcontractor firms.

4. Identify regional, state and local conferences where a significant number of small businesses, with transportation related capabilities, are expected to be in attendance. Maintain and submit a list of those events to the Regional Assistance Division for review and posting on the OSDBU Web site on a regular basis. Clearly identify the events designated for SBTRC participation and include recommendations for OSDBU participation. This information can be submitted as part of the SBTRC Report.

5. Conduct outreach and disseminate information to small businesses at regional transportation-related conferences, seminars, and workshops. In the event that the SBTRC is requested to participate in an event, the OSDBU will send DOT materials, the OSDBU banner and other information that is deemed necessary for the event.

6. Submit a conference summary report within the 'Events' section of the SBTRC Report. The conference summary report should summarize the activity, contacts made, outreach

results, and recommendations for continued or discontinued participation in future similar events sponsored by that organization.

7. Upon request by OSDBU, coordinate efforts with DOT's grantees and recipients at the state and/or local levels to sponsor or cosponsor an OSDBU transportation related conference in the region (commonly referred to as ''Small Business Summits''.

8. Participate in the SBTRC monthly teleconference call, hosted by the OSDBU Regional Assistance.

(F) *Short Term Lending Program (STLP)*

1. Work with STLP participating banks and if not available, other lending institutions to deliver a minimum of five (5) seminars/workshops per year on the STLP, and/or other financial assistance programs, to the transportation-related small business community. Seminars/workshops must cover the entire STLP/loan process, from completion of STLP/loan applications and preparation of the loan package.

2. Provide direct support, technical support, and advocacy services to potential STLP applicants to increase the probability of STLP loan approval and generate a minimum of four (4) completed STLP applications per year.

3. Provide direct support, technical support, and advocacy services to Small and Disadvantaged Businesses interested in obtaining a loan from another type of Government Lending Program. Government Lending Programs include Federal, State, and Local level programs. The SBTRC will be required to generate a minimum of three (3) completed Government Lending Program applications per year.

(G) Bonding Education Program (BEP)

Work with OSDBU, bonding industry partners, local small business transportation stakeholders, and local bond producers/agents in your region to deliver a minimum of two (2) complete Bonding Education Programs. The BEP consists of the following components; (1) the stakeholder's meeting; (2) the educational workshops component; (3) the bond readiness component; and (4) follow-on assistance to BEP participants to provide technical and procurement assistance based on the prescriptive plan determined by the BEP. For each BEP event, work with the local bond producers/agents in your region and the disadvantaged business participants to deliver a minimum of ten (10) disadvantaged business participants in the BEP with either access to bonding or an increase in bonding capacity. The programs will be funded separately and in addition to the amount listed in section 1.3 of this solicitation.

(H) Women and Girls in Transportation Initiative (WITI)

(A) Pursuant to Executive Order 13506, and 49 U.S.C. § 332 (b) (4) & (7), the SBTRC shall administer the WITI in their geographical region. The SBTRC shall implement the DOT WITI program as defined by the DOT WITI Policy. The WITI program is designed to identify, educate, attract, and retain women and girls from a variety of disciplines in the transportation industry. The SBTRC shall also be responsible for outreach activities in the implementation of this program and advertising the WITI program to all colleges and universities and transportation entities in their region. The WITI program shall be developed in conjunction with the skill needs of the USDOT, state and local transportation agencies and appropriate private sector transportation-related participants including, S/WOBs/DBEs, and women organizations involved in transportation. Emphasis shall be placed on establishing partnerships with transportation-related businesses. The SBTRC will be required to host 1 WITI event and attend at least 5 events where WITI is presented and marketed.

(B) Each region will establish Women in Transportation Advisory Committee. The committee will provide a forum to identify and provide workable solutions to barriers that women-owned businesses encounter in transportation-related careers. The committee will have 5 members (including the SBTRC Project Director) with a 1 year membership. Meetings will be conducted on a quarterly basis at an agreeable place and time.

2.2 Office of Small and Disadvantaged Business Utilization (OSDBU) Responsibilities

(A) Provide consultation and technical assistance in planning, implementing and evaluating activities under this announcement.

(B) Provide orientation and training to the applicant organization.

(C) Monitor SBTRC activities, cooperative agreement compliance, and overall SBTRC performance.

(D) Assist SBTRC to develop or strengthen its relationships with federal, state, and local transportation authorities, other technical assistance organizations, and DOT grantees.

(E) Facilitate the exchange and transfer of successful program activities and information among all SBTRC regions.

(F) Provide the SBTRC with DOT/OSDBU materials and other relevant transportation related information for dissemination.

(G) Maintain effective communication with the SBTRC and inform them of transportation news and contracting opportunities to share with small businesses in their region.

(H) Provide all required forms to be used by the SBTRC for reporting purposes under the program.

(I) Perform an annual performance evaluation of the SBTRC. Satisfactory performance is a condition of continued participation of the organization as an SBTRC and execution of all option years.

3. Submission of Proposals

3.1 Format for Proposals

Each proposal must be submitted to DOT's OSDBU in the format set forth in the application form attached as Appendix A to this announcement.

3.2 Address; Number of Copies; Deadlines for Submission

Any eligible organization, as defined in Section 1.6 of this announcement, will submit only one proposal per region for consideration by OSDBU.

Applications must be double spaced, and printed in a font size not smaller than 12 points. Applications will not exceed 35 single-sided pages, not including any requested attachments. All pages should be numbered at the top of each page. All documentation, attachments, or other information pertinent to the application must be included in a single submission. Proposal packages must be submitted electronically to OSDBU at *SBTRC@dot.gov* and to the Regional Assistance Division Manager, Michelle Harris, at *Michelle.Harris@dot.gov.*

The applicant is advised to turn on request delivery receipt notification for email submission. Proposals must be received by DOT/OSDBU no later than August 8, 2015, 6:00 p.m. Eastern Standard Time (EST).

4. Selection Criteria

4.1 General Criteria

OSDBU will award the cooperative agreement on a best value basis, using the following criteria to rate and rank applications:

Applications will be evaluated using a point system (maximum number of points = 100);

- Approach and strategy (25 points)
- Linkages (25 points)
- Organizational Capability (25 points)
- Staff Capabilities and Experience (15 points)

- Cost Proposal (10 points)

(A) Approach and Strategy (25 Points)

The applicant must describe their strategy to achieve the overall mission of the SBTRC as described in this solicitation and service the small business community in their entire geographic regional area. The applicant must also describe how the specific activities outlined in Section 2.1 will be implemented and executed in the organization's regional area. OSDBU will consider the extent to which the proposed objectives are specific, measurable, time-specific, and consistent with OSDBU goals and the applicant organization's overall mission. OSDBU will give priority consideration to applicants that demonstrate innovation and creativity in their approach to assist small businesses to become successful transportation contractors and increase their ability to access DOT contracting opportunities and financial assistance programs. Applicants must also submit the estimated direct costs, other than labor, to execute their proposed strategy. OSDBU will consider the quality of the applicant's plan for conducting program activities and the likelihood that the proposed methods will be successful in achieving proposed objectives at the proposed cost.

(B) Linkages (25 Points)

The applicant must describe their established relationships within their geographic region and demonstrate their ability to coordinate and establish effective networks with DOT grant recipients and local/regional technical assistance agencies to maximize resources. OSDBU will consider innovative aspects of the applicant's approach and strategy to build upon their existing relationships and established networks with existing resources in their geographical area. The applicant should describe their strategy to obtain support and collaboration on SBTRC activities from DOT grantees and recipients, transportation prime contractors and subcontractors, the SBA, U.S. Department of Commerce's Minority Business Development Centers (MBDCs), Service Corps of Retired Executives (SCORE), Procurement Technical Assistance Centers (PTACs), Small Business Development Centers (SBDCs), State DOTs, and State highway supportive services contractors. In rating this factor, OSDBU will consider the extent to which the applicant demonstrates ability to be multidimensional. The applicant must demonstrate that they have the ability to access a broad range of supportive services to effectively serve a broad range of transportation related small businesses within their respective geographical region. Emphasis will also be placed on the extent to which the applicant identifies a clear outreach strategy related to the identified needs that can be successfully carried out within the period of this agreement and a plan for involving the Planning Committee in the execution of that strategy.

(C) *Organizational Capability* (25 Points)

The applicant must demonstrate that they have the organizational capability to meet the program requirements set forth in Section 2. The applicant organization must have sufficient resources and past performance experience to successfully provide outreach to the small business transportation resources in their geographical area and carry out the mission of the SBTRC. In rating this factor, OSDBU will consider the extent to which the applicant's organization has recent, relevant and successful experience in advocating for and addressing the needs of small businesses. Applicants will be given points for demonstrated past transportation-related performance. The applicant must also describe technical and administrative resources it plans to use in achieving proposed objectives. In their description, the applicant must describe their facilities, computer and technical facilities, ability to tap into volunteer staff time, and a plan for sufficient matching alternative financial resources to fund the general and administrative costs of the SBTRC. The applicant must also describe their administrative and financial management staff. It will be the responsibility of the successful candidate to not only provide the services outlined herein to small businesses in the transportation industry, but to also successfully manage and maintain their internal financial, payment, and invoicing process with their financial management offices. OSDBU will place an emphasis on capabilities of the applicant's financial management staff. Additionally, a site visit may be required prior to award for those candidates that are being strongly considered. If necessary, a member of the OSDBU team will contact those candidates to schedule the site visits prior to the award of the agreement.

(D) *Staff Capability and Experience* (15 Points)

The applicant organization must provide a list of proposed personnel for the project, with salaries, fringe benefit burden factors, educational levels and previous experience clearly delineated. The applicant's project team must be well-qualified, knowledgeable, and able to effectively serve the diverse and broad range of small businesses in their geographical region. The Executive Director and the Project Director shall be deemed key personnel. Detailed resumes must be submitted for all proposed key personnel and outside consultants and subcontractors. Proposed key personnel must have detailed demonstrated experience providing services similar in scope and nature to the proposed effort. The proposed Project Director will serve as the responsible individual for the program. 100% of the Project Director's time must be dedicated to the SBTRC. Both the Executive Director and the Project Director must be located on-site. In this element, OSDBU will consider the extent to which the applicant's proposed Staffing Plan; (a) clearly meets the education and experience requirements to accomplish the objectives of the cooperative agreement; (b) delineates staff responsibilities and accountability for all work required and; (c) presents a clear and feasible ability to execute the applicant's proposed approach and strategy.

(E) Cost Proposal (10 Points)

Applicants must submit the total proposed cost of establishing and administering the SBTRC in the applicant's geographical region for a 12 month period, inclusive of costs funded through alternative matching resources. The applicant's budget must be adequate to support the proposed strategy and costs must be reasonable in relation to project objectives. The portion of the submitted budget funded by OSDBU cannot exceed the ceiling outlined in Section 1.3: Description of Competition of this RFP per fiscal year. Applicants are encouraged to provide in-kind costs and other innovative cost approaches.

4.2 Scoring of Applications

A review panel will score each application based upon the evaluation criteria listed above. Points will be given for each evaluation criteria category, not to exceed the maximum number of points allowed for each category. Proposals which are deemed non-responsive, do not meet the

established criteria, or incomplete at the time of submission will be disqualified.

OSDBU will perform a responsibility determination of the prospective awardee in the region, which may include a site visit, before awarding the cooperative agreement.

4.3 Conflicts of Interest

Applicants must submit signed statements by key personnel and all organization principals indicating that they, or members of their immediate families, do not have a personal, business or financial interest in any DOT-funded transportation project, nor any relationships with local or state transportation agencies that may have the appearance of a conflict of interest.

Appendix A—Format for Proposals for the Department of Transportation Office of Small and Disadvantaged Business Utilization's Small Business Transportation Resource Center (SBTRC) Program

Submitted proposals for the DOT, Office of Small and Disadvantaged Business Utilization's Small Business Transportation Resource Center Program must contain the following 12 sections and be organized in the following order:

1. TABLE OF CONTENTS

Identify all parts, sections and attachments of the application.

2. APPLICATION SUMMARY

Provide a *summary overview* of the following:

- The applicant's proposed SBTRC region and city and key elements of the plan of action/strategy to achieve the SBTRC objectives.
- The applicant's relevant organizational experience and capabilities.

3. UNDERSTANDING OF THE WORK

Provide a narrative which contains specific project information as follows:

- The applicant will describe its understanding of the OSDBU's SBTRC program mission and the role of the applicant's proposed SBTRC in advancing the program goals.
- The applicant will describe specific outreach needs of transportation-related small businesses in the applicant's region and how the SBTRC will address the identified needs.

4. APPROACH AND STRATEGY

- Describe the applicant's plan of action/strategy for conducting the program in terms of the tasks to be performed.
- Describe the specific services or activities to be performed and how these services/activities will be implemented.
- Describe innovative and creative approaches to assist small businesses to become successful transportation contractors and increase their ability to access DOT contracting opportunities and financial assistance programs.
- Estimated direct costs, other than labor, to execute the proposed strategy.

5. LINKAGES

- Describe established relationships within the geographic region and demonstrate the ability to coordinate and establish effective networks with DOT grant recipients and local/regional technical assistance agencies.
- Describe the strategy to obtain support and collaboration on SBTRC activities from DOT grantees and recipients, transportation prime contractors and subcontractors, the SBA, U.S. Department of Commerce's Minority Business Development Centers (MBDCs), Service Corps of Retired Executives (SCORE), Procurement Technical Assistance Centers (PTACs), Small Business Development Centers (SBDCs), State DOTs, and State highway supportive services contractors.
- Describe the outreach strategy related to the identified needs that can be successfully carried out within the period of this agreement and a plan for involving the Planning Committee in the execution of that strategy.

6. ORGANIZATIONAL CAPABILITY

- Describe recent and relevant past successful performance in addressing the needs of small businesses, particularly with respect to transportation-related small businesses.
- Describe internal technical, financial management, and administrative resources.
- Propose a plan for sufficient matching alternative financial resources to fund the general and administrative costs of the SBTRC.

7. STAFF CAPABILITY AND EXPERIENCE

- List proposed key personnel, their salaries and proposed fringe benefit factors.
- Describe the education, qualifications and relevant experience of key personnel.

Attach detailed resumes.

- Proposed staffing plan. Describe how personnel are to be organized for the program and how they will be used to accomplish program objectives. Outline staff responsibilities, accountability and a schedule for conducting program tasks.

8. COST PROPOSAL

- Outline the total proposed cost of establishing and administering the SBTRC in the applicant's geographical region for a 12 month period, inclusive of costs funded through alternative matching resources. Clearly identify the portion of the costs funded by OSDBU.
- Provide a brief narrative linking the cost proposal to the proposed strategy.

9. PROOF OF TAX EXEMPT STATUS

10. ASSURANCES SIGNATURE FORM

Complete the attached Standard Form 424B.ASSURANCES–NON CONSTRUCTION PROGRAMS identified as Attachment 1.

11. CERTIFICATION SIGNATURE FORMS

Complete form DOTF2307–1 DRUG–FREE WORKPLACE ACT CERTIFICATION FOR a GRANTEE OTHER THAN AN INDIVIDUAL identified as attachment 2 and Form DOTF2308–1 CERTIFICATION REGARDING LOBBYING FOR CONTRACTS, GRANTS, LOANS, AND COOPERATIVE AGREEMENTS identified as Attachment 3.

Signed Conflict of Interest Statements

The statements must say that they, or members of their immediate families, do not have a personal, business or financial interest in any DOT-funded transportation projects, nor any relationships with local or state transportation agencies that may have the appearance of a conflict of interest.

12. STANDARD FORM 424

Complete Standard Form 424 Application for Federal Assistance identified as Attachment 4.

PLEASE BE SURE THAT ALL FORMS HAVE BEEN SIGNED BY AN AUTHORIZED OFFICIAL WHO CAN LEGALLY REPRESENT THE ORGANIZATION.

Brandon Neal,

Director, Office of Small and Disadvantaged Business Utilization, Office of the Secretary, U.S. Department of Transportation.

[FR Doc. 2015–14030 Filed 6–8–15; 8:45 am]

BILLING CODE 4910–9X–P

DEPARTMENT OF TRANSPORTATION

Office of the Secretary

[Docket Number: DOT–OST–2015–0123]

Request for OMB Clearance of a New Information Collection; New Information Collection: Women and Girls in Transportation Initiative Intemship Volunteer Program

AGENCY: Office of the Secretary (OST), U.S. Department of Transportation (DOT).

ACTION: 60-Day Notice; Letter of public notification of the Women and Girls in Transportation Initiative lnternship Volunteer Program (WITIIP) information collection activity.

SUMMARY: In compliance with the Paperwork Reduction Act of 1995, Public law 104–13 (44 U.S.C. 3501 et seq) this notice announces the Information Collection Request on DOT Form OST 1250.1 Application for Transportation Internship, DOT Form OST 1250.1A Student Internship Evaluation, andDOT Form OST 1250.18 Internship Evaluation for this new DOT program.

Executive Order 13506, (''EO 13506'') dated March 11, 2009, entitled ''Establishing a White House Council on Women and Girls''. EO 13506 requires Federal agencies to address issues that particularly impact the lives of women and girls and to ensure that Federal programs and policies address and take into account the distinctive concerns of women and girls, including women of

color and those with disabilities. Furthermore, EO 13506 points specifically to the fact that women are still significantly underrepresented in the science, engineering, and technology fields. In response to EO 13506, DOT established the WITI. The WITI encourages women and girls to pursue careers in the science, technology, engineering, and mathematics fields and enter the transportation industry through outreach and the provision of transportation-related internship opportunities. The program is administered by the DOT OST Office of Small and Disadvantaged Business Utilization (OSDBU).

FOR FURTHER INFORMATION CONTACT: For further information concerning this notice, contact Michelle Harris, Manager, Regional Assistance Division, OSDBU, U.S Department of Transportation, 1200 New Jersey Ave, SE., Room W56–444, Washington, DC 20590. Telephone: 1–800–532–1169 or 202–366–1930. Email: *michelle.harris@dot.gov.*

SUPPLEMENTARY INFORMATION:

Title: Women and Girls in Transportation Initiative lnternship Volunteer Program Application for lnternship Volunteer.

Catalog of Federal Domestic Assistance Number: 20.907 Women and Girls in Transportation Initiative.

OMB Control Number: 2105–XXXX.

Form Number: OST F 1250.1.

Affected Public: Female students currently enrolled in a participating institution of education with a 2.8 Grade Point Average or higher.

Frequency: One-time.

Estimated Average Burden per Response: 2 hours.

Estimated Annual Burden Hours: 660 hours.

Abstract: The information collected will be from female students currently enrolled in a participating institution of education with a 2.8 Grade Point Average or higher. The information collected will be used by DOT OSDBU to verify eligibility and process the application. The information being collected relates the name of the student; gender; full street address; email address; phone number; school name; school address; current Grade Point Average; expected graduation date; major area of study; minor area of study; and a professor's evaluation of the student's critical skills and the professor's recommendation. A copy of the student's most current transcript will be collected to verify the student's enrollment status and Grade Point Average. A one-page letter of interest will be collected in order to select the best candidates for the different transportation-related internships available.

Title: Women and Girls in Transportation Initiative lnternship Volunteer Program Student Evaluation.

Catalog of Federal Domestic Assistance Number: 20.907 Women and Girls in Transportation initiative lnternship Volunteer Program.

OMB Control Number: 2105–XXXX.

Form Number: OST F 1250.1A.

Affected Public: Transportation-related internship/volunteer providers.

Frequency: One-time.

Estimated Average Burden per Response: 2 hours.

Estimated Annual Burden Hours: 660 hours.

Abstract: The information collected will be from internship/volunteer providers at the conclusion of the student's transportation-related internship/volunteer opportunity. The information collected will be used by participating educational institutions to verify successful completion of the internship for academic credit, if offered. The evaluation will also be used by DOT OSDBU to verify successful completion of the internship/volunteer position to evaluate the student's performance in the event the students apply for future internship/volunteer opportunities offered by the program. The information collected will also be used by the intern to identify their strengths and areas of improvement. The information being collected relates the name of the organization; full street address; name of the supervisor and evaluator; internship semester; date the internship/volunteer positon concluded; internship description; intern's name, major area of study, and school name. The information collected also relates the evaluation of the student's performance of the performance elements; evaluation of the student's strengths and weaknesses; evaluator's general comments; and the internship/volunteer provider's willingness to host future interns.

Title: Women and Girls Internship in Transportation lnternship Volunteer Program Evaluation.

Catalog of Federal Domestic Assistance Number: 20.907 Entrepreneurial Training and Technical Assistance Women and Girls Program.

OMB Control Number: 2105–XXXX.

Form Number: OST F 1250.18.

Affected Public: WITI student interns/volunteers.

Frequency: One-time.

Estimated Average Burden per Response: 2 hours.

Estimated Annual Burden Hours: 660 hours.

Abstract: The information collected will be from student interns/volunteers at the conclusion of the student's transportation-related internship/volunteer experience. The information collected will be used by DOT OSDBU to evaluate internship/volunteer providers and the student's experience to improve the WIT! and possibly identify potential problem internship/volunteer providers. The information being collected relates the name of the student's major area of study, and school name; internship provider's name, full mailing address; intern/volunteer's supervisor; internship/volunteer semester; date the position concluded; and internship/volunteer description. The information collected also relates the evaluation of the internship/volunteer provider and internship/volunteer experience; suggested WITI improvements; evaluator's general comments; and the intern's willingness to apply for future opportunities.

Brandon Neal,

Director, Office of Small and Disadvantaged Business Utilization.

[FR Doc. 2015–14031 Filed 6–8–15; 8:45 am]

BILLING CODE 4910–9X–P

DEPARTMENT OF TRANSPORTATION

Office of The Secretary

Application of Menagerie Enterprises, Inc. d/b/a Monarch Air for Commuter Air Carrier Authority

AGENCY: Department of Transportation

ACTION: Notice of Order to Show Cause (Order 2015–6–1) Docket DOT–OST–2014–0192

SUMMARY: The Department of Transportation is directing all interested persons to show cause why it should not issue an order finding Menagerie Enterprises, Inc. d/b/a Monarch Air, fit, willing, and able, and awarding it commuter air carrier authorization.

DATES: Persons wishing to file objections should do so no later than June 10, 2015.

ADDRESSES: Objections and answers to objections should be filed in Dockets DOT–OST–2014–0192 and addressed to the U.S. Department of Transportation, Docket Operations, 1200 New Jersey Avenue SE., West Building Ground Floor, M–30, Room W12–140, Washington, DC and should be served upon the parties listed in Attachment A to the order.

FOR FURTHER INFORMATION CONTACT: Shabu Thomas, Air Carrier Fitness

Division, (X–56, Office W86–469), U.S. Department of Transportation, 1200 New Jersey Avenue SE., Washington, DC 20590, (202) 366–9721.

Dated: June 3, 2015.

Susan L. Kurland,

Assistant Secretary for Aviation and International Affairs.

[FR Doc. 2015–14033 Filed 6–8–15; 8:45 am]

BILLING CODE 4910–9X–P

FEDERAL REGISTER

Vol. 80 Tuesday,

No. 110 June 9, 2015

Part II

Department of the Treasury

Office of the Comptroller of the Currency

12 CFR Part 34

Federal Reserve System

12 CFR Parts 208 and 225

Federal Deposit Insurance Corporation

12 CFR Parts 323 and 390

Bureau of Consumer Financial Protection

12 CFR Part 1026

Federal Housing Finance Agency

12 CFR Part 1222

Minimum Requirements for Appraisal Management Companies; Final Rule

DEPARTMENT OF THE TREASURY

Office of the Comptroller of the Currency

12 CFR Part 34

[Docket No. OCC–2014–0002]

RIN 1557–AD64

FEDERAL RESERVE SYSTEM

12 CFR Parts 208 and 225

[Docket No. R–1486]

RIN 7100–AE15

FEDERAL DEPOSIT INSURANCE CORPORATION

12 CFR Parts 323 and 390

RIN 3064–AE10

BUREAU OF CONSUMER FINANCIAL PROTECTION

12 CFR Part 1026

RIN 3170–AA44

FEDERAL HOUSING FINANCE AGENCY

12 CFR Part 1222

RIN 2590–AA61

Minimum Requirements for Appraisal Management Companies

AGENCIES: Office of the Comptroller of the Currency, Treasury (OCC); Board of Governors of the Federal Reserve System (Board); Federal Deposit Insurance Corporation (FDIC); National Credit Union Administration (NCUA); Bureau of Consumer Financial Protection (Bureau); and Federal Housing Finance Agency (FHFA).

ACTION: Final rule.

SUMMARY: The OCC, Board, FDIC, NCUA, Bureau, and FHFA (collectively, the Agencies) are adopting a final rule to implement the minimum requirements in the Dodd-Frank Wall Street Reform and Consumer Protection Act (the Dodd-Frank Act) to be applied by participating States in the registration and supervision of appraisal management companies (AMCs). The final rule also implements the minimum requirements in the Dodd-Frank Act for AMCs that are subsidiaries owned and controlled by an insured depository institution and regulated by a Federal financial institutions regulatory agency (Federally regulated AMCs). Under the final rule, these Federally regulated AMCs do not need to register with a State, but are subject to the same minimum requirements as State-regulated AMCs. The final rule also implements the requirement for States to report to the Appraisal Subcommittee (ASC) of the Federal Financial Institutions Examination Council (FFIEC) the information required by the ASC to administer the new national registry of AMCs (AMC National Registry). In conjunction with this implementation, the FDIC is integrating its appraisal regulations for State nonmember banks and State savings associations.

DATES: *Effective date.* This final rule will become effective on August 10, 2015.

Compliance date: Federally regulated AMCs must comply with the minimum requirements for providing appraisal management services under 12 CFR 34.215(a) no later than 12 months from the effective date of this final rule. The participating State or States in which a State-regulated AMC operates will establish the compliance deadline for State-regulated AMCs.

FOR FURTHER INFORMATION CONTACT:

OCC: Robert L. Parson, Appraisal Policy Specialist, (202) 649–6423, G. Kevin Lawton, Appraiser (Real Estate Specialist), (202) 649–7152, Mitchell E. Plave, Special Counsel, Legislative and Regulatory Activities Division, (202) 649–5490, for persons who are deaf or hard of hearing, TTY, (202) 649–5597, or Christopher Manthey, Special Counsel, Bank Activities and Structure Division, (202) 649–5500.

Board: Carmen Holly, Supervisory Financial Analyst, Division of Banking Supervision and Regulation, at (202) 973–6122, or Walter McEwen, Senior Counsel, Legal Division, at (202) 452–3321, Board of Governors of the Federal Reserve System, Washington, DC 20551.

FDIC: Beverlea S. Gardner, Senior Examination Specialist, Division of Risk Management and Supervision, at (202) 898–3640, Sandra S. Barker, Senior Policy Analyst, Division of Depository and Consumer Protection, at (202) 898–3915, Mark Mellon, Counsel, Legal Division, at (202) 898–3884, or Benjamin K. Gibbs, Senior Regional Attorney, at (678) 916–2458, Federal Deposit Insurance Corporation, 550 17th Street NW., Washington, DC 20429.

NCUA: John Brolin or Pamela Yu, Staff Attorneys, Office of General Counsel, at (703) 518–6540, or Vincent Vieten, Program Officer, Office of Examination and Insurance, at (703) 518–6360, or 1775 Duke Street, Alexandria, Virginia, 22314.

Bureau: Owen Bonheimer, Counsel, Office of Regulations, and David Friend, Counsel, Office of Regulations, 1700 G Street NW., Washington, DC 20552, at (202) 435–7000.

FHFA: Robert Witt, Senior Policy Analyst, Office of Housing and Regulatory Policy, (202) 649–3128, or Ming-Yuen Meyer-Fong, Assistant General Counsel, Office of General Counsel, (202) 649–3078, Federal Housing Finance Agency, 400 Seventh Street SW., Washington, DC 20024.

SUPPLEMENTARY INFORMATION:

I. Background

AMC Minimum Requirements

Section 1473 of the Dodd-Frank Act [1] added a new section 1124 to Title XI of the Financial Institutions Reform, Recovery, and Enforcement Act of 1989 [2] (FIRREA) that established minimum requirements to be applied by States in the registration and supervision of AMCs. An AMC is an entity that serves as an intermediary for, and provides certain services to, creditors.[3] These minimum requirements apply to States that have elected to establish, pursuant to section 1117 of FIRREA,[4] an appraiser certifying and licensing agency with authority to register and supervise AMCs (participating States). Section 1473 of the Dodd-Frank Act [5] also requires the ASC to maintain an AMC National Registry, which will include AMCs that are either registered with, and subject to supervision by, a State appraiser certifying and licensing agency or are subsidiaries owned and controlled by a Federally regulated insured depository institution and regulated by a Federal financial institutions regulatory agency.[6] Section 1124(e) further requires the Agencies to promulgate regulations for the reporting of the activities of AMCs to the ASC in determining the payment of the annual fee for the AMC National Registry.[7]

Pursuant to FIRREA section 1124, the Agencies must establish, by rule, minimum requirements to be imposed by a participating State appraiser certifying and licensing agency on

[1] Public Law 111–203, 124 Stat. 1376.

[2] Public Law 101–73, 103 Stat. 183.

[3] The term ''appraisal management company'' is defined in more detail in section 1121(11) of Title XI of FIRREA, 12 U.S.C. 3350(11), and in § 34.211(c) of this final rule.

[4] 12 U.S.C. 3346.

[5] Hereafter, section references are to Title XI of FIRREA, unless otherwise noted.

[6] 12 U.S.C. 3332(a)(6).

[7] 12 U.S.C. 3353(e). *See also* FIRREA section 1109(a)(3), 12 U.S.C. 3338(a)(3) (requiring States to submit reports to the ASC concerning supervisory activities involving AMCs). This final rule does not implement section 1109(a)(3); this section of FIRREA is implemented by the ASC.

AMCs doing business in the State.[8] Specifically, pursuant to section 1124(a), participating States must require that AMCs: (1) Register with, and be subject to supervision by, the State appraiser certifying and licensing agency in the State or States in which the company operates; (2) verify that only State-certified or State-licensed appraisers are used for Federally related transactions;[9] (3) require that appraisals comply with the Uniform Standards of Professional Appraisal Practice (USPAP); and (4) require that appraisals are conducted in accordance with the statutory valuation independence standards pursuant to the Truth in Lending Act (TILA) (15 U.S.C. 1639e) and its implementing regulations.[10] An AMC that is a subsidiary owned and controlled by an insured depository institution and regulated by a Federal financial institutions regulatory agency is subject to all of the minimum requirements, except the requirement to register with a State.[11]

In participating States, the minimum requirements apply to any AMC that provides appraisal management services, as defined in the final rule, and meets the statutory panel size threshold, which is that the AMC oversees an appraiser panel of more than 15 State-certified or State-licensed appraisers in a State or 25 or more appraisers in two or more States in a calendar year or 12-month period under State law. States may establish requirements for AMC registration and supervision that are in addition to these minimum requirements.[12]

Pursuant to section 1124(f), beginning 36 months from the effective date of this final rule, an AMC that meets the statutory size threshold may not provide services for a Federally related transaction in a State unless the AMC is registered with the State or is subject to oversight by a Federal financial institutions regulatory agency.[13] This provision effectively allows each State up to three years to establish registration and supervision systems that meet the requirements of the final rule before AMCs in the State will be subject to the aforementioned restriction in the absence of such a regime. The ASC, with the approval of the FFIEC, may delay the restriction for an additional year if the ASC makes a written finding that a State has made substantial progress toward implementation of a system that meets the criteria in Title XI of FIRREA.[14] Even after the three-year implementation period has passed, a State may still elect to establish a regime, at which point AMCs operating in the State would be able to provide appraisal management services for Federally related transactions.

Section 1124 does not compel a State to establish an AMC registration and supervision program, nor is a penalty imposed on a State that does not establish a regulatory structure for AMCs within 36 months of issuance of this final rule.[15] However, in a State that has not adopted the AMC minimum requirements established by this rule, AMCs are barred by section 1124 from providing appraisal management services for Federally related transactions, unless they are owned and controlled by a Federally regulated depository institution.[16] Thus, appraisal management services may still be provided for Federally related transactions in non-participating States by individual appraisers, by AMCs that are below the minimum statutory panel size threshold, and as noted previously, by Federally regulated AMCs.[17]

On April 9, 2014, the Agencies published a proposed rule to implement the minimum requirements under FIRREA section 1124 for registration and supervision of AMCs, with a 60-day public comment period.[18] With certain changes to the proposed rule, this final rule implements the statutory requirements discussed above, as well as section 1124's requirements for the reporting of the activities of AMCs in determining the payment of the annual registry fee.[19] The final rule is being published in the Code of Federal Regulations separately by the OCC, the Board, the FDIC, and the FHFA. The Bureau is publishing a cross-reference to the OCC rule text in the valuation independence provisions of Regulation Z, 12 CFR 1026.42, to highlight that the final rule specifically reinforces the valuation independence standards. The rules are not different substantively. The implementation of the AMC minimum requirements does not affect the responsibility of banks, Federal savings associations, State savings associations, bank holding companies, and credit unions to ensure that appraisals for their institutions comply with applicable laws and regulations and are consistent with supervisory guidance. If these regulated financial institutions use an AMC to engage appraisers on their behalf, the AMC must be acting as an agent for these institutions.[20]

Consolidation of FDIC and OTS Rules on Appraisals

Title III of the Dodd-Frank Act transferred the powers, duties, and functions formerly performed by the Office of Thrift Supervision (OTS), the Federal entity formerly responsible for the supervision of Federally insured savings associations and their holding companies, to the FDIC for State savings associations and authorized the FDIC to consolidate OTS and FDIC rules.[21] The final rule implements this authority by rescinding the OTS regulatory provisions on appraisals pertaining to State savings associations, as these entities are now covered by the FDIC's appraisal rules.[22]

II. The Final Rule

The final rule: (1) Establishes the minimum requirements in section 1124 of FIRREA for State registration and supervision of AMCs in participating States; (2) requires Federally regulated AMCs to meet the minimum requirements of section 1124 (other than registering with the State); and (3) requires States to report certain AMC information to the ASC.[23] The final rule also integrates FDIC appraisal regulations for State nonmember banks and State savings associations.

For the reasons discussed in section III of this **SUPPLEMENTARY INFORMATION**,

[8] 12 U.S.C. 3353(a).

[9] Under FIRREA, a Federally related transaction is a real estate related financial transaction that involves an insured depository institution regulated by the OCC, Board, FDIC, or NCUA and that requires the services of an appraiser under the interagency appraisal rules. *See* 12 U.S.C. 3350(4), implemented by the OCC: 12 CFR 34.42(f) and 34.43(a); Board: 12 CFR 225.62(f) and 225.63(a); FDIC: 12 CFR 323.2(f) and 323.3(a); and NCUA: 12 CFR 722.2(f) and 722.3(a).

[10] 12 U.S.C. 3353(a). For regulations implementing TILA section 129E, 15 U.S.C. 1639e, *see* 12 CFR 226.42 (Board) and 12 CFR 1026.42 (Bureau).

[11] 12 U.S.C. 3353(c).

[12] 12 U.S.C. 3353(b).

[13] 12 U.S.C. 3353(f)(1).

[14] 12 U.S.C. 3353(f)(2).

[15] 12 U.S.C. 3353.

[16] *See* FIRREA section 1124(f)(1), 12 U.S.C. 3353(f)(1). Under section 1124(c), this restriction will not apply to AMCs that are subsidiaries owned and controlled by an insured depository institution and regulated by a Federal financial institutions regulatory agency. 12 U.S.C. 3353(c). Such AMCs are subject to all the requirements of section 1124, with the exception of the requirement to register with a State. *See id.*

[17] *See* FIRREA section 1121(11), 12 U.S.C. 3350(11).

[18] 79 FR 19521 (Apr. 9, 2014).

[19] 12 U.S.C. 3353(e). *See also* 12 U.S.C. 3338(a)(4) (setting out the fee structure for the AMC National Registry).

[20] *See* OCC: 12 CFR 34.45(b)(1); Board: 12 CFR 225.65(b)(1); FDIC: 12 CFR 323.5(b)(1); and NCUA: 12 CFR 722.5(b)(1).

[21] The OTS was abolished on October 19, 2011, pursuant to the Dodd-Frank Act.

[22] Title III of the Dodd-Frank Act transferred supervision of Federal savings associations to the OCC. The OCC recently integrated the OTS and OCC rules on appraisals. *See* 79 FR 28393 (May 16, 2014) (integrating certain interagency rules for national banks and Federal savings associations).

[23] *See* 12 U.S.C. 3353(a), (c), and (e).

the final rule adopts the rule substantially as proposed, with modifications to: (1) Provide that the standard for determining whether an appraiser is an independent contractor will be based on how the appraiser is treated for Federal income taxes, as determined under Internal Revenue Service (IRS) guidance; (2) clarify that an AMC credit union service organization (CUSO) is not considered to be a Federally regulated AMC, and therefore would be regulated by the State or States in which the AMC CUSO operates; (3) clarify that the rule does not bar the use of trainee appraisers; (4) provide that the registration limitations on individuals who have had their licenses refused, denied, cancelled, surrendered in lieu of revocation, or revoked, should not be construed to apply to appraisers whose licenses have been revoked for nonsubstantive reasons, as determined by the appropriate State appraiser certifying and licensing agency and whose licenses have been subsequently reinstated; (5) revise the provision on reporting of information by Federally regulated AMCs to clarify that Federally regulated AMCs will report information required for the AMC National Registry directly to the States; and (6) remove cross-references to provisions of Regulation Z, 12 CFR part 1026 (Truth in Lending), in the proposed definitions. The Agencies are generally adopting the relevant text of the cross-referenced Regulation Z provisions, in lieu of the cross-references. The final rule also contains technical, nonsubstantive changes.

III. The Final Rule and Public Comments on the Proposed Rule

The following is a section-by-section review of the proposed rule and a discussion of the public comments received by the Agencies concerning the proposal. The Agencies received 256 comment letters containing 89 unique comments in response to the published proposal. These comment letters were received from State appraiser certifying and licensing agencies, AMCs, appraiser trade and professional associations, appraisal firms, appraisers, financial institutions, consumer/community groups and individual commenters. For ease of reference, unless otherwise noted, the **SUPPLEMENTARY INFORMATION** refers to section numbers in the proposed and final rule texts for the OCC, 12 CFR 34.210 *et seq.* Rule text for the other Agencies is published separately in this **Federal Register** notice at 12 CFR 208.50 and 225.190 *et seq.* (Board); 12 CFR 323.8 *et seq.* (FDIC); and 12 CFR 1222.20 *et seq.* (FHFA).

A. Section 34.211. Definitions

The Agencies requested comment on the key definitions in the proposed rule. The following is a discussion of these key definitions, related public comments, and issues relating to those definitions. Definitions on which the Agencies did not receive comment are not discussed below and are adopted without change in the final rule.

1. Cross-References to Other Regulations

The Agencies are adopting changes to definitions for which cross-references to Regulation Z, 12 CFR part 1026, were used in the proposed rule. Specifically, the Agencies are removing most cross-references and adopting the relevant text of the cross-referenced provisions directly (*see* § 34.211(g) (defining ''consumer credit''), § 34.211(i) (defining ''creditor''), and § 34.211(m) (defining ''person''). In addition, the Agencies are defining the term ''dwelling'' in § 34.211(j) by adopting the text of the definition of ''dwelling'' in 12 CFR 1026.2(a)(19), which was included in the proposed definition of ''principal dwelling'' (*see* proposed § 34.211(m)). In new § 34.211(j)(2), the Agencies are retaining the explanation of ''principal dwelling'' that was provided in the proposed rule.[24] (*See* proposed § 34.211(m)). This explanation is based on Official Interpretation 12 CFR 1026.2(a)(24)–3. The Agencies are adopting these changes in the final rule to simplify the rule and relieve regulatory burden on States. Substituting the text of these definitions for cross-references mitigates the potential obligations of States to update, clarify, or amend State law or its interpretations as Regulation Z is amended over time, or if the numbering of definitions in Regulation Z changes.[25]

2. Section 34.211(c): Appraisal Management Company; Section 34.211(d): Appraisal Management Services

Proposed § 34.211(c) defined an AMC as a person that: (1) Provides appraisal management services to creditors or secondary mortgage market participants; (2) provides these services in connection with valuing the consumer's principal dwelling as security for a consumer credit transaction (including consumer credit transactions incorporated into securitizations); and (3) within a given year, oversees an appraiser panel of more than 15 State-certified or State-licensed appraisers in a State or 25 or more State-certified or State-licensed appraisers in two or more States. The proposed definition cross-referenced proposed § 34.212 for the rules on how to calculate the numeric threshold for the appraiser panel.

Proposed § 34.211(d) defined ''appraisal management services,'' which is a key component of the definition of ''appraisal management company,'' to mean one or more of the following: (1) Recruiting, selecting, and retaining appraisers; (2) contracting with State-certified or State-licensed appraisers to perform appraisal assignments; (3) managing the process of having an appraisal performed, including providing administrative duties such as receiving appraisal orders and appraisal reports, submitting completed appraisal reports to creditors and secondary mortgage market participants, collecting fees from creditors and secondary mortgage market participants for services provided, and paying appraisers for services performed; and (4) reviewing and verifying the work of appraisers. This definition is consistent with the appraisal management services outlined in the definition of AMC in section 1121.[26] As in section 1121, the proposed definition of appraisal management services did not include performing appraisals, nor does the definition of appraisal management services adopted in this final rule.[27]

a. Commercial Transactions and the Definition of AMC

Consistent with the statutory definition of AMC, the proposed definition of AMC applied to appraisal management services provided in connection with residential mortgage transactions secured by the consumer's principal dwelling and securitizations involving those mortgages. The proposed rule did not extend to appraisal management services provided in connection with commercial real estate transactions or securitizations involving commercial real estate mortgages.[28]

In drafting the definition of AMC for the proposal, the Agencies considered whether the statutory definition of AMC in section 1121 should be construed to

[24] *See* proposed §§ 34.211(m) and 34.211(j)(2).

[25] These changes also should avoid any inadvertent confusion created by referring to Regulation Z, which includes additional exemptions that are not included in these regulations, such as for transactions meeting the Regulation Z definition of consumer credit transaction secured by a principal dwelling, but used to purchase a 3–4 unit owner-occupied rental property.

[26] *See* 12 U.S.C. 3350(11).

[27] *See id.*

[28] 12 U.S.C. 3350(11).

encompass not only appraisal management services provided for securitizations of consumer purpose residential mortgages, but also appraisal services in connection with securitizations of commercial mortgages.[29] The Agencies proposed the former. The Agencies' reading of the statute—that it extends only to consumer purpose residential mortgage transactions and securitizations of those mortgages—is consistent with the text of section 1124 and with the Dodd-Frank Act as a whole.[30] Non-residential or commercial mortgages are not mentioned in any AMC provisions in section 1473 of the Dodd Frank Act (or elsewhere in Title XIV of the Dodd-Frank Act). The lack of a reference to commercial mortgage lending in the relevant Dodd-Frank Act provisions suggests that AMCs were not intended to be covered by the AMC minimum requirements when they are providing appraisal management services for underwriters or other principals in commercial mortgage securitizations. Moreover, the Agencies understand that individual appraisers, as opposed to AMCs, are more typically retained to provide an appraisal of properties securing commercial mortgage loans (and securitizations of such loans) because of the size and complexity of those properties. This understanding is based on the supervisory experience of the Agencies as well as outreach during the proposed rule process to a trade association for AMCs and an individual AMC, which confirmed that, under the current business model, AMCs do not generally provide services in connection with commercial mortgages.

The Agencies received a small number of comments concerning whether an AMC's services for commercial mortgage transactions should be covered by the final rule. Several commenters supported the proposal to exclude commercial real estate transactions from the definition of AMC. One commenter disagreed, stating that both commercial and consumer transactions should be covered by the rule, but did not elaborate.

The Agencies continue to believe that commercial real estate transactions should be excluded from the definition of AMC based on the reasons outlined above. As such, the definition of AMC in the final rule includes entities only when they are providing appraisal management services for consumer mortgage transactions secured by the consumer's principal dwelling and securitizations of those loans.

b. ''External Third Party'' Within the Definition of AMC

Section 1121 defines an AMC as any ''external third party'' authorized to take certain actions by a creditor of a consumer credit transaction secured by the consumer's principal dwelling or by an underwriter of or other principal in the secondary mortgage markets.[31] Consistent with the statutory definition, the proposal defined the term ''appraisal management company'' to exclude a department or division of an entity if the department or division provides appraisal management services only to that entity. This reflects the Agencies' interpretation that a department or a division of an entity is not an ''external third party'' as required by the statute. Under the proposed rule, an AMC that is an affiliate (rather than a department or division) of a creditor or secondary market principal would, however, be treated as an AMC, even if the AMC provides appraisal management services only to the entity with which it is affiliated, because the affiliate is a separate legal entity.

The Agencies believe that this interpretation of the term ''external third party'' is consistent with the plain meaning of ''external'' and ''third party,'' as well as with section 1124(c), which provides that the requirements of section 1124 would apply to AMCs that are owned and controlled by financial institutions.[32] In the Agencies' view, this interpretation is also consistent with section 1124 as a whole, which is directed at regulating parties that provide appraisal management services on behalf of creditors and secondary market principals, but does not regulate creditors or secondary market principals directly.[33]

The Agencies received one comment on this topic, which supported the exclusion of departments and divisions from the definition of AMC. The Agencies are adopting in the final rule the proposed approach to ''external third party.''

c. Uniformity and the Definition of AMC

The Agencies received a number of comments suggesting that the Agencies require all participating States to adopt the definition of AMC in the proposed rule. Several commenters also stated that reducing burden for AMCs would reduce costs for consumers. As a legal basis for this position, one commenter noted that the definition of AMC is statutory, and therefore should be binding on all the participating States.

The Agencies agree that the definition of AMC in section 1121 sets the uniform minimum standards for assessing whether an entity is an AMC under this rule.[34] Under the proposed rule, a participating State would be required to treat an entity as an AMC if the entity provides services described in the definition and meets the statutory panel size threshold. As such, pursuant to section 1121 and the proposed rule, a participating State could not revise the definition of AMC to eliminate or limit the range of services that would classify an entity as an AMC with respect to the minimum requirements in the rule. Similarly, a State could not void the statutory panel size threshold that triggers the minimum requirements by, for example, adopting an AMC law that provides that an entity is an AMC only if it has 50 or more appraisers on its nationwide panel.[35] Thus, all States electing to establish an AMC regulatory program under the rule would have a uniform minimum scope as to coverage of their program.

While the Agencies understand the commenters' desire for uniformity, FIRREA section 1124(b) recognizes expressly the authority of States to adopt requirements in addition to those in the final rule: ''Nothing in this section [1124] shall be construed to prevent States from establishing requirements in addition to any rules promulgated under subsection(a)[by the Agencies].''[36] Therefore, the Agencies decline to require all participating States to adopt a uniform definition of AMC.

d. ''Portals'' Within the Definition of AMC

The Agencies received one comment from an entity that provides appraisal related services through electronic mechanisms, described as a ''portal'' business model. The commenter requested that the Agencies address the question of whether a portal is an AMC.

The Agencies do not support a categorical rule in this regard. The business model an entity uses to provide services should not be

[29] While it is clear that the definition of AMC encompasses only residential mortgage loans, there is some question as to whether the definition includes securitizations of commercial mortgages.

[30] 12 U.S.C. 3353.

[31] 12 U.S.C. 3350(11).

[32] 12 U.S.C. 3353(c).

[33] 12 U.S.C. 3353.

[34] 12 U.S.C. 3350(11). This rule establishes ''minimum'' requirements for a State to apply in registering AMCs. Thus, the Agencies interpret the rule of construction in FIRREA section 1124(b) to recognize that States may adopt requirements that exceed those in the rule, for example, defining AMC to cover more entities than would be covered under the minimum requirements of this rule. 15 U.S.C. 3353(b).

[35] 12 U.S.C. 3350(11).

[36] 12 U.S.C. 3353(b).

determinative of whether the entity is an AMC; rather, if a portal is providing appraisal management services, and meets the other elements of the definition, then it should be considered an AMC under the final rule. Thus, the final rule does not limit or affect the discretion of States to treat a portal as an AMC if a State finds that a portal provides appraisal management services.

e. Distinction Between AMCs and Appraisal Firms

In the proposal, the Agencies addressed whether appraisal firms should be considered AMCs pursuant to sections 1124 and 1121(11) [37] and requested comment on whether the distinction between employees and independent contractors served as a basis for excluding appraisal firms from the definition of an AMC. (*See* Question 3 in the proposal.) The technical distinction between independent contractors and employees, for purposes of determining whether an entity meets the statutory panel size thresholds, is addressed in the section-by-section analysis of § 34.212 (Appraiser Panel), which discusses how to calculate the number of appraisers on a panel. The following is a discussion of the comments on the broader issue of whether the proposal appropriately excluded appraisal firms from the scope of the rule.

A number of commenters supported the proposal to construe section 1124 as applying only to AMCs or hybrid entities (discussed in detail below) and not to appraisal firms. These commenters stated that the business models of AMCs and appraisal firms are different. Under the different business models, according to these commenters, employees of appraisal firms perform appraisals, while AMCs contract for appraisal services, but do not perform appraisals. Another set of commenters argued that appraisal firms should be covered by the rule. The basis for this argument was the commenters' assertion that there is no substantive distinction between AMCs, which hire others to perform appraisals, and appraisal firms, which generally hire appraisers as employees.

As discussed in the preamble to the proposed rule, the Agencies interpret section 1124 to distinguish between AMCs and appraisal firms for three key reasons.[38] First, the distinction between appraisal firms and AMCs is reflected in section 1472 of the Dodd-Frank Act, which added provisions concerning valuation independence to TILA.[39] These provisions contemplate expressly that certain entities would not be covered by the AMC minimum requirements in FIRREA section 1124 and describe this type of entity, in pertinent part, as one that ''utilizes the services of State licensed or certified appraisers *and receives a fee for performing appraisals* in accordance with the Uniform Standards of Professional Appraisal Practice.'' [40] The Agencies understand that the type of entity described here as excluded from the AMC minimum requirements is an appraisal firm, which receives fees for directly performing appraisals. Second, FIRREA section 1124 uses the term ''appraisal management company,'' and not appraisal firm.[41] Third, section 1121(11) describes the activities of AMCs as including ''contracting with State-certified or State-licensed appraisers to perform appraisal assignments,'' but not directly performing appraisals.[42] Section 1121(11) also defines an AMC as an entity that ''oversees a network or panel of more than 15 certified or licensed appraisers in a State or 25 or more nationally (meaning two or more States) within a given year . . .'' [43] By contrast, the Agencies understand that appraisal firms perform appraisals as a primary function directly through employees and do not oversee a ''network or panel'' of non-employee appraisers.

As stated in the proposal, the Agencies believe that the fundamental reasons to distinguish between AMCs and appraisal firms are that the business models of AMCs and appraisal firms are different and that Congress expressed an intention to exclude entities operating on an appraisal firm model from coverage by the AMC minimum requirements. This conclusion is consistent with the fact that AMCs provide appraisal management services to third parties, including retaining appraisers to perform appraisals, but AMCs do not perform appraisals. By contrast, appraisal firms perform appraisals using one or more of the firm's employees or partners. In addition, appraisal firms typically hire a limited number of appraisers, based on identified need, and hire inexperienced trainees and train them to become qualified appraisers. AMCs, on the other hand, generally have a large number of pre-approved appraisers in their network or panel who are available, as independent contractors, for potential assignments and do not conduct training for inexperienced appraisers.

f. Hybrid Entities

In the proposal, the Agencies discussed the possibility that there are, or may be in the future, ''hybrid'' entities, meaning entities that both hire appraisers as employees to perform appraisals and engage independent contractors to perform appraisals. In this situation, the entity could be considered both an AMC and an appraisal firm. As such, under the proposed rule, the hybrid entity would be treated as an AMC for purposes of State registration if it meets the statutory panel size threshold (of overseeing more than 15 State-certified or State-licensed appraisers in a State or 25 or more State-certified or State-licensed appraisers in two or more States within a given year). Under the proposal, the numerical calculation of panel size for hybrid entities would only include appraisers engaged as independent contractors.

Some commenters supported the proposed treatment of firms that have both employee appraisers and independent contractor appraisers. One commenter suggested that the Agencies should not recognize a hybrid firm as a valid business model, but did not elaborate. The Agencies adopt in the final rule the proposed definition of AMC and the proposed treatment of hybrid firms. The Agencies continue to believe that sections 1124 and 1121(11) are best interpreted to apply only to AMCs, as defined in the proposed and final rules, and not to appraisal firms (with the exception of hybrid firms). In addition to the statutory distinction between appraisal firms and AMCs, the Agencies believe this interpretation is consistent with, and supported by, the key distinction between AMCs and appraisal firms—that the former contracts with appraisers to perform appraisals, while the latter performs appraisals directly through employees. Even if some services provided by AMCs and appraisal firms overlap, which some commenters assert, this key difference between the two entities (that AMCs contract with appraisers to perform appraisals and appraisal firms perform appraisals directly through their own employees) remains. The final rule also reflects the definition of ''appraisal management company'' in

[37] 12 U.S.C. 3353 and 3350(11).

[38] 12 U.S.C. 3353.

[39] *See* TILA section 129F, 15 U.S.C. 1639e.

[40] 15 U.S.C. 1639e(i)(2) (emphasis added); *see also* 12 U.S.C. 3353. A ''fee appraiser'' is defined in TILA section 129E, 15 U.S.C. 1639(e)(i), as a person who: (1) Is not an employee of a loan originator or AMC engaging the appraiser; (2) performs an appraisal in compliance with USPAP; and (3) is a company [an appraisal firm] not subject to the requirements of section 1124 (minimum requirements for AMCs, 12 U.S.C. 3353) and that receives a fee for performing appraisals.

[41] *Id.*

[42] 12 U.S.C. 3350(11).

[43] 12 U.S.C. 3350(11).

section 1121(11), which provides that an AMC is an entity that ''oversees a network or panel'' of appraisers.[44] Appraisal firms do not oversee networks or panels of non-employee appraisers.

The Agencies also continue to believe that recognition of hybrid firms as AMCs is appropriate when the entity maintains a panel of appraisers that includes independent contractors meeting the threshold minimum numbers pursuant to § 34.212. The Agencies believe that this interpretation of the definition of AMC is consistent with the statutory language and purpose, appropriately reflects the business models of AMCs, and accommodates the possibility that appraisal firms may evolve over time. For these reasons, the Agencies adopt in the final rule the proposed definition of AMC and the proposed treatment of hybrid firms.

3. Section 34.211(e) Appraiser Panel

The Agencies are adopting the proposed definition of ''appraiser panel'' with minor clarifications. Specifically, proposed § 34.211(e) defined an appraiser network or panel as a network of State-licensed or State-certified appraisers who are independent contractors to an AMC. In the final rule, ''appraiser panel'' is defined as a network, list or roster of licensed or certified appraisers approved by the AMC to perform appraisals as independent contractors for the AMC. Appraisers on an AMC's ''appraiser panel'' under this part include both appraisers accepted by the AMC for consideration for future appraisal assignments and appraisers engaged by the AMC to perform one or more appraisals. The final rule also clarifies in the definition of ''appraiser panel'' that an appraiser is an independent contractor for purposes of this rule if the appraiser is treated as an independent contractor by the AMC for purposes of Federal income taxation.

a. Distinction Between Employees and Independent Contractors in Determining Panel Membership

The definition of ''appraisal management company'' in section 1121(11) provides that an entity will be treated as an AMC subject to State registration if it has an ''appraiser network or panel'' of more than 15 State-certified or State-licensed appraisers in a State or 25 or more appraisers nationally (meaning two or more States) within a given year.[45] Section 1121(11) does not specify whether a ''network or panel'' consists of employees of an AMC or independent contractors retained by the AMC (or both). However, by including only independent contractors with the AMC, the proposed and adopted definition of ''appraiser panel'' reflects the approach taken by the majority of States that have adopted AMC registration laws or have proposed AMC laws[46] and reflects the Agencies' understanding that AMCs typically engage appraisers as independent contractors under the current AMC business model.[47] Section 34.211(e) also reflects the definition of AMC in section 1121(11), which outlines typical tasks carried out by AMCs, including as ''contract[ing] with licensed and certified appraisers.''[48] As discussed above in the section-by-section analysis of § 34.211(c), the definition of AMC and its description of appraisal management services does not include directly performing appraisals through the AMC's own employees—rather, AMCs contract with external third parties to perform appraisals.[49]

The method for calculating whether an entity has an ''appraiser network or panel'' of more than 15 State-certified or State-licensed appraisers in a State or 25 or more appraisers nationally (meaning two or more States) within a calendar year or 12-month period under State law is discussed further under the section-by-section analysis of § 34.212, below.

The Agencies requested comment on the proposed definition of ''appraiser panel'' and on the alternative of defining this term to include employees as well as independent contractors. (*See* Question 2 in the proposal.) Some commenters argued that employees as well as independent contractor appraisers should be counted as part of an appraiser network or panel. These commenters did not disagree with the Agencies' understanding that AMCs generally use independent contractors rather than employee appraisers. Nor did the commenters address the key distinction between AMCs and appraisal firms, which is that AMCs primarily engage third parties to perform appraisals, whereas appraisal firms perform appraisals directly through employees.

As discussed above in the section-by-section analysis of § 34.211(c), the commenters argued that appraisal firms should be regulated as AMCs as a matter of policy. As such, these commenters suggested that the distinction between employee and independent contractor appraisers be removed from the rule. In support of this position, the commenters stated that appraisal firms and AMCs provide substantially the same services, and therefore should both be covered by the AMC registration and supervision programs.

Other commenters agreed with the employee-independent contractor distinction, stating that defining ''appraiser panel'' to be comprised only of independent contractor appraisers reflects the difference between the AMC and appraisal firm business models. Specifically, these commenters stated that appraisal firms' employees perform appraisals directly, while AMCs provide appraisal management services and engage third-party appraisers to perform appraisals.

The Agencies adopt in the final rule the proposed definition of ''appraiser panel,'' which includes only appraisers who are independent contractors to an AMC. The Agencies note the predominance of comments in favor of retaining the employee-independent contractor distinction. The final rule also reflects that the commenters who opposed the proposed employee-independent contractor distinction effectively conceded that the distinction is accurate, arguing instead that AMCs and appraisal firms should both be regulated as AMCs under section 1124 and implementing State laws, regardless of the way these entities structure their operations.[50] This larger policy question is addressed above in the discussion of the distinction between employees and independent contractors as a basis for exclusion of an appraisal firm from the definition of an AMC. *See* the section-by-section analysis of § 34.211(c)

[44] 12 U.S.C. 3350(11).

[45] 12 U.S.C. 3350(11).

[46] A majority of States with AMC laws define ''appraiser panel'' as being comprised of independent contractors. *See, e.g.,* N.C. Gen. Stat. section 93E–2–2 (defining an appraiser panel as a network or panel of appraisers who are independent contractors to the AMC); Vernon's Tex. Code Ann. Occupations Code section 1104.003(b)(3) (same); Louisiana La. Rev. Stat. Ann. section 37:3415.2(a) (same); *see also* Ohio (draft code) (same). A minority of States use a broader definition for ''appraiser panel'' that encompasses a combination of independent contractors and employees. *See, e.g.,* Cal. Bus. & Prof. Code section 11302 (defining AMC to include both independent contractors and employees); Ark. Code Ann. section 17–14–402(2) (same); Ky. Rev. Stat. section 324A.150(2)(same). The majority approach is consistent with the model AMC code offered by a trade association for appraisers and the minority approach is consistent with a model code offered by a trade association for AMCs.

[47] As discussed in the proposal, this understanding is based on outreach conducted by the Agencies with associations that represent AMCs and appraisers, as well as outreach with State appraiser certifying and licensing agencies.

[48] 12 U.S.C. 3350(11).

[49] The Agencies will monitor AMCs to assess whether they are hiring appraisers as part-time employees to avoid State registration requirements. Outreach with State officials before the issuance of the proposed rule did not indicate this is currently occurring or at significant risk of occurring.

[50] 12 U.S.C. 3353.

(definition of AMC), above. Moreover, the treatment of hybrid firms will help address the potential that a firm may try to avoid the requirements of the rule by using a combination of appraisers who are employees and appraisers who are independent contractors.

b. Definition of Independent Contractor

The Agencies requested comment on whether the term ''independent contractor'' should be defined, and if so why and how, including whether it should be defined based on Federal law by using the standards or guidance issued by the IRS or standards adopted in other Federal regulations, such as those issued under the Secure and Fair Enforcement for Mortgage Licensing Act of 2008 (SAFE Act),[51] or left to State law. (*See* Question 2 in the proposal.) A number of commenters requested that the final rule include a definition of independent contractor, or that the rule incorporate an external definition, for example, IRS guidance on the employee-independent contractor distinction or the definition of independent contractor in the SAFE Act. In addition, these commenters stated that it would be desirable to have a standard for independent contractor that applies in all participating States. The commenters stated a preference for using IRS guidance for this purpose. One commenter disagreed, suggesting that a single definition of the term independent contractor is not needed.

The Agencies believe that additional guidance on the meaning of ''independent contractor'' under the final rule facilitates compliance and, therefore, are amending the proposed definition of appraiser panel accordingly. As noted, the definition of appraiser panel in § 34.211(e) provides that that an appraiser is deemed an ''independent contractor'' for purposes of this rule if the appraiser is treated as such by the AMC for purposes of Federal income taxation.[52]

4. Section 34.211(h): Covered Transaction

Proposed § 34.211(h) defined a covered transaction as any consumer credit transaction secured by the consumer's principal dwelling. The proposed definition did not limit the definition of ''covered transaction'' to Federally related transactions (generally, credit transactions involving a Federally regulated depository institution, *see* 12 U.S.C. 3350(4)), even though Title XI of FIRREA and its implementing regulations have applied historically only to appraisals for Federally related transactions.

As stated in the proposed rule, defining ''covered transaction'' to include all consumer credit transactions secured by the consumer's principal dwelling reflects the statutory text of section 1121(11), which defines the term ''appraisal management company,'' as in pertinent part, ''any external third party authorized either by a creditor of a consumer credit transaction secured by the consumer's principal dwelling or by an underwriter of or other principal in the secondary mortgage markets.'' [53]

Applying coverage of the AMC rule beyond Federally related transactions is consistent with the structure and text of other parts of section 1124, most of which address appraisals generally rather than appraisals only for Federally related transactions. For example, section 1124(a)(2) specifies that only licensed or certified appraisers are to be used for ''federally related transactions,'' but sections 1124(a)(3) and (a)(4) apply to ''appraisals'' generally.[54] In particular, the text of section 1124(a)(4) indicates that one of the chief purposes of the minimum requirements for AMCs is to ensure compliance with the valuation independence standards established pursuant to section 129E of TILA.[55] Those standards apply to AMCs whenever they engage in a consumer credit transaction secured by the consumer's principal dwelling, regardless of whether the transaction is a Federally related transaction.[56]

For these reasons, the proposed rule provided that the minimum requirements in participating States would apply to *all* entities that meet the definition of AMC in providing appraisal management services related to consumer credit transactions secured by the consumer's principal dwelling for both Federally related transactions and non-Federally related transactions.

The Agencies received one comment that supported the proposed definition of ''covered transaction.'' The Agencies are adopting it in the final rule as proposed. As such, a covered transaction is defined to mean any consumer credit transaction secured by the consumer's principal dwelling. For the reasons discussed above in describing the proposed definition, the Agencies have determined the final rule should not limit the definition of ''covered transaction'' to consumer credit transactions secured by the consumer's principal dwelling that are Federally related transactions.

5. Section 34.211(k): Federally Regulated AMCs

Section § 34.211(k) defines a ''Federally regulated AMC'' as an AMC that is owned and controlled by an insured depository institution, as defined in 12 U.S.C. 1813, or an insured credit union, as defined in 12 U.S.C. 1752, and regulated by the OCC, the Board, the NCUA, or the FDIC. This definition differs from the proposed definition only in that the reference to the NCUA is removed, for reasons discussed below.

Under section 1124(c), an AMC that is a subsidiary owned and controlled by an insured depository institution or an insured credit union and regulated by a Federal financial institutions regulatory agency [57] is not required to register with a State.[58] Proposed § 34.211(j) defined an entity of this type as a ''Federally regulated AMC,'' meaning an AMC that is owned and controlled by an insured depository institution, as defined in 12 U.S.C. 1813, or an insured credit union, as defined in 12 U.S.C. 1752, and regulated by the OCC, the Board, the NCUA, or the FDIC. Under section 1124(c), a Federally regulated AMC must follow the minimum requirements that are applicable to a State-registered AMC (other than the requirement to register with a State) and is subject to supervision for compliance with these requirements by the appropriate Federal financial institutions regulatory agency. In addition, under section 1124(e), as

[51] 12 CFR 1008.23 (''*Independent contractor* means an individual who performs his or her duties other than *at the direction of and subject to the supervision and instruction of* an individual . . .'') (emphasis added). The SAFE Act was enacted as part of the Housing and Economic Recovery Act of 2008, Pub. L. 110–289, Division A, Title V, sections 1501–1517, 122 Stat. 2654, 2810–2824 (July 30, 2008), *codified at* 12 U.S.C. 5101–5116.

[52] For guidance on how to determine whether an appraiser is an employee or independent contractor, *see* IRS Publication 1779, ''Independent Contractor or Employee,'' *available at http://www.irs.gov/pub/irs-pdf/p1779.pdf* and IRS Publication 15–A, ''Employer's Supplemental Tax Guide,'' at p. 7 *et seq.* (discussing factors for distinguishing employees from independent contractors), *available at http://www.irs.gov/pub/irs-pdf/p15a.pdf.*

[53] 12 U.S.C. 3350(11).

[54] *See* 12 U.S.C. 3353(a)(2) (3) and (4).

[55] 12 U.S.C. 3353(a)(4).

[56] *See* 15 U.S.C. 1639e(a) (defining scope); 12 CFR 1026.42(b)(1)–(2) (implementing regulations defining scope).

[57] The term ''Federal financial institutions regulatory agencies'' means the Board, the FDIC, the OCC, the former OTS, and the NCUA. 12 U.S.C. 3350(6). Title III of the Dodd-Frank Act provides that the OCC is now the Federal financial institutions regulatory agency for Federal savings associations. Title III of the Dodd-Frank Act also provides that the FDIC is the Federal financial institutions regulatory agency for State savings associations. Finally, the Dodd-Frank Act provides that the Board is responsible for regulation of savings and loan holding companies.

[58] 12 U.S.C. 3353(c).

implemented by the proposed rule, AMCs, including Federally regulated AMCs, must report to the participating State or States in which they operate the information required to be submitted by the State to the ASC for administration of the AMC National Registry. These requirements are discussed further in the section-by-section analysis of § 34.215, below.

In the proposal, the Agencies discussed whether an AMC that is a subsidiary owned and controlled by a credit union (credit union service organization or ''CUSO'') would be considered a Federally regulated AMC, and thus exempt from State registration and supervision. The Agencies indicated that an AMC, even if owned and controlled by a credit union, would not be a Federally regulated AMC because the NCUA, unlike the other banking agencies involved in this rulemaking, does not directly oversee or regulate CUSOs. Instead, the authority that the NCUA exercises over CUSOs is through its regulations that permit Federal credit unions to invest in, or lend to, CUSOs.[59] For these reasons, under the proposed rule, if an AMC were owned and controlled by a credit union (whether owned by a State or Federally chartered credit union) it would not be considered to be regulated by a Federal financial institutions regulatory agency. As such, the AMC CUSO would be required to be registered in accordance with applicable State requirements in participating States.[60]

The Agencies requested comment on whether references to the NCUA and insured credit unions should be removed from the definition of ''Federally regulated AMC'' and other parts of the final rule to clarify that an AMC CUSO would be subject to State registration and supervision. (*See* Question 4 in the proposal.) Some commenters expressed concern that the references to the NCUA and credit unions in the proposed regulatory text were confusing and suggested that removing these references in the final rule would clarify that AMC CUSOs are subject to State registration and supervision.

To provide clarification in the final rule, the Agencies removed references to NCUA and credit unions from pertinent portions of the regulatory text defining ''Federally regulated AMC.'' An AMC owned and controlled by a credit union (whether owned by a State or Federally chartered credit union) is not considered to be regulated by a Federal financial institutions regulatory agency under the final rule. As such, AMC CUSOs are required to register in accordance with applicable State requirements.

6. Section 34.211(n): Secondary Mortgage Market Participant

In the proposed rule, the Agencies defined ''secondary mortgage market participant'' to implement the statutory definition of AMC, which refers to an entity that performs services authorized by ''an underwriter of or other principal in the secondary mortgage markets.''[61] Proposed § 34.211(n) defined ''secondary mortgage market participant'' to mean a guarantor or insurer of mortgage-backed securities, or an underwriter or issuer of mortgage-backed securities. The definition included individual investors in a mortgage-backed security only if they also serve in the capacity of a guarantor, insurer, underwriter, or issuer for the mortgage-backed security.

Most commenters supported the proposed definition of ''secondary mortgage market participant.'' Some commenters indicated that the definition is clear and needs no further additions or clarifications at this time, but could at some future date to reflect evolving conditions. One commenter believed that the definition is sufficiently understandable for States to be able to write statutes and rules to enforce the intent of the rule. Another commenter suggested that the definition of ''secondary market participant'' is too narrow, and that any bank or creditor involved in lending Federally insured funds in a transaction secured by real estate (commercial or residential) should be considered a secondary market participant.

Commenters did not provide any specific suggestions for revising the proposed definition of secondary mortgage market participant. As with other aspects of the proposed rule, the Agencies understand that changes in the marketplace may, at some point, require the Agencies to amend the final rule, or may require States to amend or re-interpret State laws. The Agencies continue to believe, however, that the definition of secondary mortgage market participant is accurate at present. Regarding the comment that banks or creditors lending Federally insured funds should be included, the Agencies note that the statutory definition of AMC distinguishes between ''creditors'' and ''secondary mortgage market participants,''[62] and therefore believe that including originating banks or creditors in the definition of ''secondary mortgage market participants'' would be inconsistent with this distinction in the statutory definition. The Agencies in the final rule adopt the proposed definition of secondary mortgage market participant.

B. Section 34.212: Appraiser Panel—Annual Size Calculation

1. Determining Appraiser Panel

Section 34.212 finalizes proposed § 34.212 without change, other than revising the title from ''Appraiser Panel'' to ''Appraiser Panel—Annual Size Calculation,'' for clarity. Section 34.212 sets out criteria for determining whether, within a calendar year or 12-month period specified by State law, an AMC oversees an appraiser panel of more than 15 State-certified or State-licensed appraisers in a State or 25 or more State-certified or State-licensed appraisers in two or more States. Consistent with the proposal, pursuant to § 34.212(a), an appraiser is deemed part of the AMC's appraiser panel as of the earliest date the AMC accepts the appraiser for consideration for future appraisal assignments in covered transactions or engages the appraiser to perform one or more appraisal assignments on behalf of a creditor or secondary mortgage market participant in a covered transaction, including an affiliate of such a creditor or participant. Also consistent with the proposal, pursuant to § 34.212(b), an appraiser who is considered to be part of the AMC's appraiser panel is deemed to remain on the panel until: (1) The date on which the AMC sends written notice to the appraiser removing the appraiser from the appraiser panel; (2) the date the AMC receives written notice from the appraiser asking to be removed from the appraiser panel; or (3) the date the AMC receives notice of the death or incapacity of the appraiser. If an appraiser is removed from an AMC's appraiser panel, but the AMC subsequently accepts the appraiser for consideration for future assignments or engages the appraiser at any time during the twelve months after the appraiser's removal, the removal would be deemed not to have occurred, and the appraiser would be deemed to have been part of the AMC's appraiser panel without interruption. The Agencies included

[59] *See* 12 CFR part 712 (outlining requirements relating to credit union investments in CUSOs).

[60] As noted in the preamble to the proposed rule, the NCUA has not, historically, asserted that CUSOs or their employees are exempt from applicable State registration and licensing regimes. *See* 75 FR 44656, 44659 (applying similar reasoning to the licensing of mortgage loan originators who were employees of CUSOs under the SAFE Act.

[61] 12 U.S.C. 3350(11).

[62] 12 U.S.C. 3350(11).

these procedural provisions to give States clarity and prevent circumvention of the registration requirement.

The Agencies received a wide variety of comments relating to the calculation of appraiser panel membership under Question 2 of the proposal. Some commenters suggested that the approach in the proposal, which would count appraisers either engaged to perform appraisals or pre-approved to do so, would result in the unintended consequence of limiting the number of appraisers in AMC networks or panels. These commenters argued that pre-approved appraisers who have not yet been engaged by the AMC for an assignment should not be counted. They argued that the proposed method of counting appraisers would provide a strong incentive for AMCs to limit significantly the size of networks or panels, given that the AMC National Registry fee will be determined based on the number of appraisers on an AMC's network or panel of appraisers. The commenters stated that, to reduce costs, AMCs would likely reduce the size of appraiser panels if the proposed method of counting appraisers were adopted as final.

As background, the commenters explained that AMCs maintain large panels of pre-approved appraisers in order to offer timely appraisal services in a wide variety of areas, including smaller communities and rural areas where appraisers are engaged less often than in more populated communities. The commenters noted that, if the AMCs reduce panels to actively engaged appraisers, then real estate transactions in small communities and rural areas will take more time because AMCs would not typically have pre-approved appraisers readily available for this type of assignment.[63] For these reasons, the commenters requested that the Agencies modify the proposed method of counting appraisers in an AMC's network or panel to include only appraisers who are actually engaged to perform an appraisal during a 12-month period.

The Agencies understand the commenters' concerns relating to the panel membership and the potential for AMCs to reduce their appraiser networks or panels to reduce ASC fees. The Agencies are also cognizant of, and concerned about, the potential adverse effects this may have on small communities and rural areas. However, for several reasons, the Agencies decline to amend the rule such that only appraisers actually given assignments in a particular year will be counted as being on the panel. First, the Agencies interpret sections 1124 and 1121(11) to mean that the counting of appraisers in determining whether an entity is subject to the AMC minimum requirements does not control or affect the counting of appraisers for purposes of payment of the AMC National Registry fee.[64] Therefore, this final rule does not address or require the collection or calculation of these fees. Section 34.212 of the rule implements FIRREA section 1121(11) and governs how to count the number of appraisers on a panel *only* for purposes of whether an entity is an AMC subject to the AMC minimum requirements of this final rule, either as an AMC registered with a State that adopts these requirements or as a Federally regulated AMC.[65] The rule requires AMCs to provide information to the State or States in which they operate, to be used in determining the payment of the annual AMC National Registry fee, but does not address or control how to calculate the number of appraisers on a network or panel for purposes of determining the fee. The AMC National Registry fee provisions pertaining to the calculation, assessment, and collection of the fee are addressed in FIRREA section 1109(a), which is enforced and administered by the ASC, not by the Agencies pursuant to section 1124.[66] As such, it is the ASC, and not the Agencies in this rulemaking, that will determine how to calculate and pay the AMC National Registry fee.

Second, the statute that the Agencies are charged with implementing expressly defines an AMC with reference to the number of appraisers that the AMC ''oversees'' on a ''network or panel'' in a given year, not only on the number of appraisers to which it actually gives assignments.[67] While commenters speculate that this approach to defining the number of appraisers that an AMC oversees on a network or panel may lead to efforts to evade the definition, the alternative approach suggested by commenters of relying only on the number of appraisers actually used during a 12-month period will also encourage evasion attempts. This alternative would allow AMCs to accumulate relationships with large numbers of independent contractors, advertise this breadth of coverage, and evade the rule by managing the actual use of appraisers through the year.

The Agencies will monitor the effect of the rule and the definition of AMC for evasion and revisit the rule to the extent appropriate and permitted by statute in light of future developments.

2. Section 34.212(d): Annual Period for Counting Appraisers on AMC Panel

Proposed § 34.212(d) provided two options to States for calculating the number of appraisers on an entity's panel for determining whether the entity meets the minimum thresholds for designation as an AMC. The first was the 12-month calendar year and the second was any other 12-month period set by a State. One commenter suggested that, to promote uniformity, all States should be required to use the calendar year for determining whether an entity has the requisite number of appraisers on its panel to qualify as an AMC.

Under the proposed rule, States would have the flexibility to align the 12-month period for determining AMC status with their AMC registration calendars, which may, or may not, be based on the calendar year. In this regard, the Agencies are aware that many States already do not use a calendar year for their existing appraiser registration process. The Agencies believe that allowing states to set the 12-month period provides appropriate flexibility and will help States comply with the minimum requirements and reduce regulatory burden for State governments. Thus, the Agencies adopt § 34.212(d) in the final rule without change.

C. Section 34.213: Appraisal Management Company Registration

1. Section 34.213(a): Minimum Requirements for Participating States

Under proposed § 34.213(a), adopted without change in this final rule, participating States must have a licensing program in place within the State appraiser certifying and licensing agency that has the authority to: (1) Review and approve or deny an AMC's application for initial registration; (2) review and renew or refuse to renew an AMC's registration periodically; (3) examine the books and records of an

[63] One commenter, a coalition of three AMCs, stated the process of approving an appraiser for a panel typically requires from one week at a minimum to a month.

[64] 12 U.S.C. 3350(11) (defining an AMC subject to the minimum requirements as, in pertinent part, an entity with a ''network or panel of more than 15 certified or licensed appraisers in a State or 25 or more nationally (meaning two or more States) within a given year.'' 12 U.S.C. 3350(11). The provision of the statute relevant to determining the registry fee is in section 1109(a)(4)(B), which provides that the fee is based on the number of appraisers ''working for or contracting with [an AMC] in [a] state during the previous year.'' FIRREA section 1109(a)(4)(B), 12 U.S.C. 3338(a)(4)(B).

[65] 12 U.S.C. 3350(11).

[66] 12 U.S.C. 3338(a), 3353.

[67] FIRREA section 1121(11), 12 U.S.C. 3350(11) (defining AMC).

AMC operating in the State and require the AMC to submit reports, information, and documents to the State; (4) verify that the appraisers on the AMC's appraiser panel hold valid State certifications or licenses, as applicable; (5) conduct investigations of AMCs to assess potential violations of applicable appraisal-related laws, regulations, or orders; (6) discipline, suspend, terminate, and refuse to renew the registration of an AMC that violates applicable appraisal-related laws, regulations, or orders; and (7) report to the ASC an AMC's violation of applicable appraisal-related laws, regulations, or orders, as well as disciplinary and enforcement actions and other relevant information about an AMC's operations.

These authorities and mechanisms reflected the Agencies' interpretation of the provisions of section 1124(a), including the minimum requirement in section 1124(a)(1) that AMCs be ''subject to supervision'' by the State appraiser certifying and licensing agency.[68] The Agencies interpret section 1124(a) as being consistent with the criteria outlined in FIRREA sections 1103, 1109, and 1118(a), which describe the elements of State regulation of AMCs that will be monitored by the ASC.[69] For example, the ASC is responsible for monitoring whether States have supervision systems in place that would allow a State to process complaints against an AMC and conduct investigations in connection with those complaints.[70] The ASC is also responsible for monitoring whether a State takes appropriate enforcement actions against an AMC that is found to have violated applicable laws and regulations.[71] Consistent with the interpretation stated in the proposal, the Agencies continue to believe that these requirements are consistent with the enforcement and supervision authorities underlying an effective regulatory program and will ensure that State appraiser certifying and licensing agencies have the required structures for the registration and supervision of AMCs.

2. Section 34.213(b): Minimum Requirements for State-Registered AMCs

The Agencies are adopting proposed § 34.213(b) without change. Section 34.213(b) implements FIRREA sections 1121(11) and 1124 and provides that participating States must require State-registered AMCs to follow certain minimum requirements when AMCs provide appraisal management services for a creditor or ''underwriter of or other principal in the secondary mortgage markets'' that are related to a covered transaction.[72] Pursuant to the minimum requirements in § 34.213(b), an AMC (other than a Federally regulated AMC) is required to register with, and be subject to supervision by, a State appraiser certifying and licensing agency in each State in which the AMC operates. In addition, States must require AMCs to verify that only State-certified or State-licensed appraisers are used when a creditor or secondary mortgage market participant engages in a transaction that requires the services of a State-certified or State-licensed appraiser under the Federally related transaction regulations. A State also must require registered AMCs to have processes and controls reasonably designed to ensure that the AMC, in engaging an appraiser, selects an appraiser who has the requisite education, expertise, and experience to complete competently the assignment for the particular market and property type. This minimum requirement implements the requirement of section 1124(a)(2)[73] and emphasizes a core principle of the Agencies' FIRREA appraisal regulation and the Interagency Appraisal and Evaluation Guidelines, which is that an appraiser must not only be State credentialed and competent generally, but also have specific competency to perform a particular appraisal assignment.[74]

In addition, States must require an AMC to establish and comply with processes and controls reasonably designed to ensure that the AMC conducts its appraisal management services in accordance with: (1) The AMC's obligations as a covered person with respect to mandatory reporting, conflicts of interest, and other acts or practices that would violate valuation independence pursuant to section 129E(a) through (i) of TILA; and (2) the AMC's obligations as a creditor's agent with respect to appraiser compensation pursuant to section 129E(i) of TILA, 15 U.S.C. 1639e(i).[75]

As noted in the proposed rule, the AMC minimum standards do not affect the responsibility of banks, Federal savings associations, State savings associations, bank holding companies, and credit unions for compliance with applicable regulations and guidance concerning appraisals. Under the interagency appraisal rules, for example, if an appraisal is prepared by a fee appraiser (as opposed to in-house, by the institution), the appraiser must be engaged directly by the regulated institution or its agent, and have no direct or indirect interest, financial or otherwise, in the property or the transaction.[76] As stated in the Interagency Appraisal and Evaluation Guidelines, an institution that engages a third party, such as an AMC, to administer any part of the institution's appraisal program remains responsible for compliance with applicable laws concerning appraisers and appraisals.[77]

The Agencies requested comment on the proposed minimum requirements for State registration and supervision of AMCs. (*See* Question 6 in the proposal.) The Agencies also asked related questions concerning appraisal review standards and potential challenges States may encounter under the proposed minimum requirements for State registration and supervision of AMCs. (*See* Questions 7 through 11 in the proposal.) The following is a summary of these comments, followed by the response from the Agencies.[78]

[68] 12 U.S.C. 3353(a). As stated in the proposal, the Agencies view section 1124 as allowing the Agencies to establish more specific requirements for supervision and registration of AMCs that implement the general requirements enumerated in section 1124(a). *Id.* In addition, by providing that the regulation shall ''include'' the requirements enumerated in section 1124, the statute implies that the Agencies have the discretion to establish additional supervisory standards for State oversight of AMCs consistent with the general requirements specifically enumerated in section 1124(a). *Id.*

[69] *See* 12 U.S.C. 3332(a)(1)(B) (requiring the ASC to monitor requirements established by the States for supervision of AMCs); 12 U.S.C. 3338(a) (requiring each participating State to transmit reports to the ASC on supervisory activities involving AMCs and disciplinary actions taken); and 12 U.S.C. 3347(a) (requiring the ASC to monitor States to assess whether a State has an effective regulatory program).

[70] *See* FIRREA section 1103(a)(1)(B), 12 U.S.C. 3332(a)(1)(B).

[71] *See* FIRREA sections 1109(a)(3) and 1118(a)(4), 12 U.S.C. 3338(a)(3) and 3347(a)(4).

[72] 12 U.S.C. 3350(11), 3353.

[73] 12 U.S.C. 3353(a)(2).

[74] *See* 12 CFR 34.46(b) (OCC); *see also* Interagency Appraisal and Evaluation Guidelines, 75 FR 77450, 77458 (December 10, 2010); Appraisal Standards Board, Uniform Standards of Professional Appraisal Practice, Appraiser Competency Rule (2014–2015), *available at* The Appraisal Foundation, *https://netforum.avectra.com/eWeb/DynamicPage.aspx?Site=TAF&WebCode=USPAP* (requiring that an appraiser have specific competency for the appraisal assignment).

[75] *See* 12 CFR 226.42 (Board); 12 CFR 1026.42 (Bureau).

[76] 12 CFR 34.45 and 164.5 (OCC); 12 CFR 225.65 (Board); 12 CFR 323.5 (FDIC); 12 CFR 722.5(NCUA).

[77] *See* Interagency Appraisal and Evaluation Guidelines, 75 FR 77450, 77463 (discussing third-party arrangements).

[78] The Agencies received many comments on Question 6 concerning the proposed minimum requirements for State registration and supervision of AMCs. Commenters were generally supportive of the proposed requirements. However, the commenters made several observations and expressed concerns with the proposed requirements.

Continued

For the reasons explained below, the Agencies adopt proposed § 34.213 on AMC registration without change in the final rule.

a. Appraisal Review

The Agencies requested comment on the proposal to defer consideration of appraisal review standards to a separate rulemaking. (*See* Question 7 in the proposal). Some commenters agreed with the Agencies that appraisal review standards should be addressed in a separate rulemaking. Other commenters suggested that there are many pressing questions concerning appraisal review standards and that this rulemaking should therefore incorporate such standards.

In drafting the minimum requirements for State registration and supervision of AMCs, and the definition of appraisal management services discussed previously, the Agencies considered whether to require AMCs to follow minimum standards when performing appraisal reviews. This question was presented by section 1121(11), which includes appraisal review as one of the types of appraisal management services performed by AMCs.[79] In considering this question, the Agencies noted that FIRREA section 1110 requires a separate rulemaking regarding the requirement that, for Federally related transactions, appraisals shall be subject to ''appropriate'' review for compliance with USPAP.[80] As stated in the proposal, the Agencies believe that a rulemaking to implement section 1110 provides the appropriate opportunity to address the requirement for appraisal reviews.[81] For this reason, the proposed minimum standards for AMCs did not include appraisal review standards.

Commenters identified issues that may be appropriate for consideration in a rulemaking pursuant to FIRREA section 1110(3), but did not address why those standards are more appropriately addressed in the context of this rulemaking rather than in a separate rulemaking to implement section 1110(3).[82] The Agencies continue to believe that addressing appraisal review issues more comprehensively in a separate rulemaking is appropriate, rather than doing so in a limited way as part of the AMC rule. The appraisal review standard of section 1110(3) applies to all regulated financial institutions subject to the appraisal rules of the Federal financial institution regulatory agencies, not just appraisals for which one of those firms uses an AMC to engage an appraiser. In addition, most commenters supported a separate rulemaking on appraisal review standards. For these reasons, consistent with the proposal, the final rule does not contain appraisal review standards.

b. Barriers to Implementation of AMC Minimum Requirements

The Agencies also asked about whether any barriers existed for States in implementing the proposed AMC minimum requirements. (*See* Question 8 in the proposal). In response, the Agencies received several comments indicating concern that States might not have adequate funding or resources to implement or enforce the proposed rule. Other commenters expressed the view that the requirement to establish authorities and mechanisms to examine the books and records of an AMC could be subject to different interpretations by each State, and that the Agencies' expectations should be clarified. A third set of commenters indicated additional guidance is needed on the expectations for States engaging in examinations of AMCs. One commenter believed that States should be given the option to register AMCs for longer than a period of one year. *See* proposed § 34.212 (requiring an annual count of appraisers on an entity's panel to determine whether the entity is subject to State registration requirements pursuant to the proposed rule). The commenter indicated that many States allow appraiser registration for longer periods and that doing so for AMCs might facilitate implementation of the rule by States.

The Agencies are aware of, and sensitive to, the adequacy of participating States' resources to supervise AMCs in the manner contemplated by FIRREA section 1124. It is the Agencies' understanding, however, that many States that have already established AMC laws and registration programs have collected fees from AMCs, in part to offset the costs of the registration and supervision programs, using authority under State law. Nothing in this rule would prevent these States, or States that choose to become participating States, from continuing to charge fees to AMCs in the future.[83] The Agencies also note that the registration and supervision of AMCs is voluntary, and that a State may elect not to establish such a program for any reason, including if its resources do not support such a program.

With respect to the request that the Agencies set standards for State supervision of AMCs, the Dodd-Frank Act section 1473 amended FIRREA to confirm clearly the States' ability to exercise registration and supervisory capacities over AMCs, which the State can exercise using its own discretion, based on the individual State's enforcement priorities.[84] As such, the Agencies leave supervisory standards to the discretion of the States and to the ASC, which is charged under Title XI of FIRREA with evaluating the efficacy of State registration and supervision of AMCs.

Regarding the request that States be able to register AMCs for longer than a year, the Agencies defer to individual States, but note that the requirement for an annual count of appraisers on an entity's panel is statutory. Specifically, the definition of AMC in FIRREA section 1121(11) bases whether an entity is an AMC on the number of appraisers on an entity's panel ''within a given year.'' [85] Regarding whether a two-year AMC National Registry fee collection program is permissible or feasible, the Agencies defer to the ASC, which administers the relevant portion of FIRREA.[86] Specifically, FIRREA section 1109(a)(4) requires States to submit AMC fees for the AMC National Registry to the ASC annually.[87]

While the registration fee cycle is dictated by section 1109(a)(4), any additional licensing fees or any other associated fees charged by the State can be charged based on the State's determination of an appropriate cycle.[88] The Agencies do not see a need to make any changes from the proposed version of the rule to clarify the annual registration cycle requirement in the final rule.

c. Trainee Appraisers

The Agencies received one comment on the requirement that States must verify that the appraisers on an AMC's panel hold valid States licenses and certifications (*see* proposed § 34.213(a)(4)). This commenter expressed concern that the requirement

These comments overlap with comments made concerning other questions in the proposal. As such, Question 6 is not addressed separately.

[79] 12 U.S.C. 3350(11).

[80] FIRREA section 1110(3), 12 U.S.C. 3339(3).

[81] 12 U.S.C. 3339(3).

[82] 12 U.S.C. 3339(3).

[83] This approach is consistent with the States' approach to registering appraisers. The Agencies understand that State appraiser certifying and licensing agencies have collected fees from appraisers for administering national appraiser registration for many years.

[84] 12 U.S.C. 3346.

[85] 12 U.S.C. 3350(11).

[86] FIRREA section 1109(a)(4), 12 U.S.C. 3338(a)(4) (requiring States to submit AMC fees for the National Registry to the ASC annually).

[87] 12 U.S.C. 3338(a)(4).

[88] 12 U.S.C. 3338(a)(4).

could be interpreted by some States to prohibit appraisers from using trainees to assist with assignments.

The Agencies are adopting proposed § 34.213(a)(4) with a minor non-substantive change. New § 34.213(a)(4) requires States to verify that the appraisers on an AMC's appraiser panel—as defined in § 34.211(e)—hold valid State certifications or licenses, as applicable. The Agencies are removing references to a ''list,'' ''network,'' or ''roster'' because these terms are incorporated into the definition of ''appraiser panel'' in § 34.211(e). Regarding the concerns about whether trainee appraisers may be used in light of this requirement, § 34.213(a)(4) is not intended to imply any changes in the current requirements for their use. The requirement in § 34.213(a)(4) complements the requirement in proposed § 34.213(b)(2) (adopted as final without change) that AMCs must use only State-licensed or State-certified appraisers for Federally related transactions. Both are intended to implement FIRREA section 1124(a)(2), under which the Agencies must require States to require AMCs to use only State-licensed or certified appraisers for Federally related transactions.[89]

The trainee appraiser designation established by the Appraiser Qualifications Board (AQB) of the Appraisal Foundation requires trainees to work under the supervision of a qualified supervisory appraiser, as authorized by section 1122(e).[90] The Agencies continue to support the use of trainee appraisers as long as they work under the supervision of a State-certified and or State-licensed appraiser and have met the qualifications established by the appropriate State and the AQB. As such, the requirement in section 1124(a)(2) and the proposed and final rules should not be interpreted to bar trainee appraisers from working with State-certified or State-licensed appraisers who perform appraisals for AMCs, which is authorized by section 1122(e).[91] The final rule amends proposed § 34.213(b)(2), by substituting the term ''engage'' for the term ''use'' to clarify that an appraiser may work with a trainee appraiser on an appraisal, but only the appraiser may be ''engaged'' by the AMC to perform appraisals. In a Federally related transaction, an AMC may engage only a State-certified or State-licensed appraiser.

d. Valuation Independence

The Agencies received comments on proposed § 34.213(b)(5), which requires participating States to require AMCs to establish and comply with processes and controls reasonably designed to ensure that the AMC conducts its appraisal management services in accordance with the requirements of the valuation independence requirements of TILA section 129E.[92] These commenters requested that the final rule clarify the extent to which States are expected to investigate and enforce TILA section 129E and its implementing regulations, which includes the requirements to pay appraisers customary and reasonable fees. These commenters also expressed concern that States might interpret these rules differently, potentially in ways that may conflict with Federal interpretations.

In response to the comments, the Agencies note that, pursuant to section 1124(a)(4), States must require AMCs to require that appraisals are conducted in accordance with the valuation independence requirements of section 129E(a) through (i) of TILA.[93] The Agencies proposed to implement this requirement by mandating that participating States require AMCs to:

- Establish and comply with processes and controls reasonably designed to ensure that the AMC, in engaging an appraiser, selects an appraiser who is independent of the transaction and who has the requisite education, expertise, and experience necessary to competently complete the appraisal assignment for the particular market and property type; and
- Establish and comply with processes and controls reasonably designed to ensure that the AMC conducts its appraisal management services in accordance with the requirements of section 129E(a)–(i) of the Truth in Lending Act, 15 U.S.C. 1639e(a)–(i), and regulations thereunder.

See proposed § 34.213(b)(3) and (4).

Questions about what mechanisms a State agency may use to assess a party's compliance in connection with any authority the State has to commence a civil action to enforce section 129E of TILA are outside the scope of this rulemaking.[94] This final rule sets minimum standards for States to adopt in establishing a State program for registering and supervising AMCs. Once adopted by a State, these minimum standards become part of the State's legal framework for licensing and registering AMCs. Questions concerning what authority a State may confer on its own agency to supervise for and enforce compliance with the State's licensing and registration program are also outside the scope of this rulemaking.

3. Other Issues

a. The 36-Month Implementation Period

The Agencies asked for comment on whether aspects of the proposed rule would be challenging for States to implement within 36 months. (*See* Question 9 in the proposal.) The Agencies also asked States to identify alternative approaches that would make implementation easier. Seven commenters stated that 36 months does not give States enough time for implementation and that the 36-month implementation period should begin after the ASC establishes the AMC National Registry and has issued its clarifying regulations. One commenter asserted that States would have difficulty beginning the implementation process until the ASC issued its regulations. Other commenters expressed concerns that the ASC would be unable to set up a functioning AMC National Registry and issue its clarifying regulations within 36 months after this final rule is issued.

The Agencies note that Congress specifically provided for a 36- to 48-month implementation period before restrictions are imposed on AMCs in States that have not yet participated. This 36-month implementation period is set pursuant to section 1124(f), which also provides for a potential 12-month extension if the ASC finds that a State has made substantial progress towards implementing an AMC registration and supervision program.[95] Thus, only the ASC, and not the Agencies, may extend the implementation period beyond 36 months. The Agencies anticipate that concerns about the 36-month period and the need for registry regulations will be addressed by the ASC. In response to the concern expressed by the commenters, however, the Agencies are adopting changes to the proposed definitions that relied on cross-references to Regulation Z, 12 CFR part 1026 rule, by substituting the text of these definitions for the cross references. As noted in the section-by-section analysis of § 34.211, above, the Agencies believe that these changes mitigate the potential obligations of States to update, clarify, or amend State law or its interpretations as Regulation Z is amended over time, or if the

[89] 12 U.S.C. 3353(a)(2).

[90] 12 U.S.C. 3351(e).

[91] 12 U.S.C. 3351(e), 3353(a)(2).

[92] 15 U.S.C. 1639e.

[93] 12 U.S.C. 3353(a)(4), 15 U.S.C. 1639e.

[94] 15 U.S.C. 1639e.

[95] FIRREA sections 1124(f)(1) and (2), 12 U.S.C. 3353(f)(1) and (2).

numbering of definitions in Regulation Z changes.

b. Potential Differences Between State Laws and the Proposed AMC Rule

The Agencies asked for comment on whether there are questions raised by any differences between State laws and the proposed rule and whether those differences should be addressed in the final rule. (*See* Question 11 in the proposal.) As noted, one commenter suggested that, to promote uniformity, all States should be required to use the calendar year for determining whether an entity has the requisite number of appraisers on its panel to qualify as an AMC. These comments were addressed in the section-by-section analysis of § 34.212(d), above.

c. Voluntary Nature of State Adoption of AMC Registration and Supervision Programs

As described earlier in this preamble, the Agencies have interpreted section 1124 to mean that there is no requirement for States to adopt programs for registration and supervision of AMCs.[96] Rather, if a State chooses not to adopt such a program, AMCs located in that State may not provide appraisal management services for Federally related transactions, unless the AMCs are Federally regulated. To qualify to provide appraisal management services for Federally related transactions, a State program must include the minimum requirements for registration and supervision of AMCs in section 1124 and in the final rule.[97]

The Agencies received a number of comments concerning the Agencies' interpretation of the statute and the conclusion that adoption by States of AMC registration and supervision programs is voluntary and optional. These commenters argued that, in non-participating States, non-Federally regulated AMCs will be at a competitive disadvantage, because these AMCs will be barred by statute from providing appraisal management services for Federally related transactions. In addition, the commenters argued that interpreting State adoption of the minimum requirements to be voluntary would burden lenders. These commenters asserted that, in non-participating States, lenders would have to set up in-house appraisal management staff, which would raise the costs of lending. In addition, the commenters argued that, in non-participating States, consumers would be affected adversely by increased costs for appraisals and delays arising from the absence of AMCs in the marketplace. These commenters also suggested that either the Agencies or the ASC should serve as a ''back-up'' regulator to register and supervise AMCs in non-participating States. These commenters suggested that this alternative would address the same policy concerns they expressed in arguing for mandatory State participation.

In response to these comments, the Agencies note first that section 1124(a), by its plain terms, does not require any State to adopt an AMC registration and supervision program.[98] Nor is there a stated penalty for a State that declines to do so. Rather, under section 1124(f), an AMC (that is not Federally regulated) in a non-participating State is barred from providing appraisal management services for Federally related transactions.[99] The Agencies note that 38 States have already adopted AMC programs.[100] The commenters also provided no substantiating basis to support the commenters' warning that lending will be inhibited or more costly in non-participating States. If after the 36-month period following issuance of the final rule (or any extended period permitted by the ASC), a State has not yet adopted an AMC registration and supervision program, many options exist for creditors to obtain appraisals for Federally related transactions. Creditors that do not wish to hire in-house appraisers can engage third-party appraisers directly.[101] Smaller AMCs (those that have fewer than 15 appraisers in the State on their panel or fewer than 25 appraisers in two or more States) as well as Federally regulated AMCs can still perform services in Federally related transactions. AMCs that exceed the statutory size threshold may also continue to service transactions that are not Federally related and, if the State does later participate, can also then provide services in Federally related transactions.

Some commenters suggested that the Agencies or the ASC step in to register and supervise AMCs in non-participating States. Neither section 1124 nor FIRREA authorizes either the Agencies or the ASC to serve as a ''back up'' regulator for registration and supervision of AMCs.[102] The Agencies are only permitted to directly supervise Federally regulated AMCs, as discussed in the section-by-section analysis of § 34.215, below.

D. Section 34.214: Registration Limitations

Section 34.214 finalizes proposed § 34.215, which placed certain limitations on whether an AMC (whether or not Federally regulated) may be registered in a State or included in the AMC National Registry. Proposed § 34.215 was based on section 1124(d), which provides that an AMC shall not be registered by a State or included on the AMC National Registry if the company, in whole or in part, directly or indirectly, is owned by any person who has had an appraiser license or certificate refused, denied, cancelled, surrendered in lieu of revocation, or revoked in any State.[103] Section 1124(d) provides further that each person who owns more than 10 percent of an AMC must be of good moral character, as determined by the State appraiser certifying and licensing agency, and must submit to a background investigation carried out by the State appraiser certifying and licensing agency.[104]

To implement this provision, proposed § 34.215(a)—finalized in substantially similar form at § 34.214(a)—provided that an AMC may not be registered by a State or included on the AMC National Registry if such company, in whole or in part, directly or indirectly, is owned by any person who has had an appraiser license or certificate refused, denied, cancelled, surrendered in lieu of revocation, or revoked in any State. As the Agencies noted in the proposal, section 1124(d) states clearly that the limitations regarding appraiser licensure and certification determine both whether an AMC may be ''registered by a State'' and

[96] 12 U.S.C. 3353.

[97] 12 U.S.C. 3353.

[98] 12 U.S.C. 3353(a).

[99] 12 U.S.C. 3353(f).

[100] One commenter, an AMC, highlighted a report by a Hawaii State auditor regarding a proposed bill in the Hawaii legislature that concerns the registration of AMCs. The commenter argued that this report provided evidence that Hawaii would not adopt an AMC law. The auditor's report, however, does not indicate that it would be inappropriate for a State to participate in the AMC regulatory system established under section 1124. Rather, the report opined that the particular proposed bill would not be the appropriate method of participation for various reasons, including that the regulation of AMCs should not be managed by the State real estate commission. *See* Auditor of the State of Hawaii Report 10–07 (Sept. 2010) at 4, Sunrise Analysis: Real Estate Appraisal Management Companies, (Sept. 2010) at 4, *available at http://files.hawaii.gov/auditor/Reports/2010/10-07.pdf.*

[101] The valuation independence provisions of TILA section 129E and its implementing regulations do not require use of AMCs. 15 U.S.C. 1639e, implemented at 12 CFR 226.42 (Board) and 12 CFR 1026.42 (Bureau).

[102] 12 U.S.C. 3353.

[103] 12 U.S.C. 3353(d).

[104] 12 U.S.C. 3353(d).

whether an AMC may be ''included on the national registry'' of AMCs.[105]

In addition, proposed § 34.215(b)—finalized at § 34.214(b)—provided that, for AMCs seeking to be registered in a State, each person who owns more than 10 percent of an AMC must be of good moral character, as determined by the State appraiser certifying and licensing agency, and must submit to a background investigation carried out by the State appraiser certifying and licensing agency. Under the proposal, this limitation would apply to Federally regulated AMCs only if they seek to register voluntarily with a State. Under the proposal, these threshold requirements concerning licensure would be ongoing obligations for State appraiser certifying and licensing agencies. As such, a State would be expected to review whether an AMC meets the proposed ownership limitations, as described in the statute and in proposed § 34.215 (finalized at § 34.214), at the time of registration of an AMC, and at the time of renewal of the AMC license each year, or more frequently as determined necessary by that State.

1. Section 34.214 (a): Technical Versus Substantive Licensing Violations

Some commenters suggested that the Agencies consider circumstances in which an appraiser's license lapsed or was revoked for technical reasons unrelated to the quality of appraisals performed by the appraiser. They asserted that being barred from owning an AMC eligible for registration in a State or included in the AMC National Registry in these cases is potentially unfair. One example of this is when an appraiser neglects to renew his or her appraiser's license on time. Depending on the State law, an appraiser would typically be able to be reinstated, pending payment of certain penalties. In this situation, the lapse in the appraiser's license is unrelated to fraud or a failure to perform an appraisal in compliance with USPAP.

The Agencies agree that non-substantive grounds for the revocation of an appraiser's license should not be construed to be within the scope of the registration limitations in section 1124(d).[106] In connection with this, the Agencies agree that an appraiser who is subsequently reinstated by the State appraiser certifying and licensing agency should not be within the scope of the registration limitations. For example, if an appraiser's license lapses for non-payment of fees, and the appraiser is later reinstated by the State appraiser certifying and licensing agency after meeting his or her obligation, the appraiser should not be barred from owning an AMC. If, however, an appraiser's license or certificate is revoked, for example, for violations of the TILA independence standards or for failure to comply with USPAP, an AMC owned wholly or in part by that appraiser should not be eligible to register in a State or appear on the AMC National Registry. For these reasons, the final rule clarifies that an appraiser is subject to the ownership ban if the revocation of the appraiser's license or certification was for a substantive cause, as determined by the State certifying and licensing agency.

2. Other Issues

Some commenters expressed concern that States may not be able to obtain the information to determine whether an appraiser license has been revoked in another State. One commenter requested guidance on how to approach the moral character registration requirement within a corporate structure. Specifically, the commenter inquired about whether a State must review issues related to moral character to owners beyond the AMC, for example to a holding company. Another commenter suggested that the Agencies define ''good moral character'' rather than leaving it to participating States to adopt their own definition.

With respect to the commenters' questions concerning the details and logistics of a State's investigation of an applicant for presence of the registration limitation factors, the Agencies believe that it is desirable to afford flexibility to the States, many of which currently perform background investigations in connection with various licensing regimes, to establish appropriate procedures and the scope of the background investigations to be performed by that particular State. The statute establishes the ASC as the agency that oversees the adequacy of State AMC registration and investigation procedures. Similarly, with respect to the comment suggesting the final rule define ''good moral character'' in a manner that all participating States would be required to adopt, the Agencies note that section 1124 provides for the good moral character limitation to be applied ''as determined by the State.'' Thus, consistent with the statute, the final rule defers to the participating States to make determinations as to the scope of the good moral character requirement.[107] In overseeing implementation by participating States, the ASC potentially could provide input as well.

Finally, the Agencies are also clarifying in § 34.214(a) that the section regarding registration limitations applies to AMCs required to register with a State, not to Federally regulated AMCs (unless they voluntarily wish to register with a State). Accordingly, the title of this section has been revised from ''Registration limitations'' to ''Ownership limitations for AMCs registering in a State.'' As discussed in the section-by-section analysis of new § 34.215(b), below, for clarity the Agencies added a separate provision regarding limitations on Federally regulated AMCs being included on the AMC National Registry, also pursuant to section 1124(d).[108]

E. Section 34.215: Requirements for Federally Regulated AMCs

Section 1124(c) provides that AMCs that are owned and controlled subsidiaries of an insured depository institution or an insured credit union and regulated by a Federal financial institutions regulatory agency, are not required to register with a State.[109] These Federally regulated AMCs are, however, subject to the same minimum requirements as AMCs that are not regulated by a Federal financial institutions regulatory agency.

1. Section 34.215(a): Requirements in Providing Services

Section 34.215(a) finalizes without change the proposed § 34.214(a) concerning requirements for Federally regulated AMCs. Pursuant to proposed § 34.214(a), Federally regulated AMCs were subject to the same substantive standards that were proposed for non-Federally regulated AMCs. Specifically, pursuant to § 34.214(a), Federally regulated AMCs were required to have systems in place to ensure that only State-certified or State-licensed appraisers perform appraisals for Federally related transactions; that appraisers with the requisite education, expertise, and experience necessary for the assignment are used; that appraisals comply with USPAP; and that the

[105] 12 U.S.C. 3353(d).

[106] 12 U.S.C. 3353(d).

[107] State appraiser boards also have experience applying the ''good moral character'' standard, which is a common element of appraiser licensure standards already. *See, e.g.,* Virginia 18 VAC 130–20–30(1); Pennsylvania Code Ch. 36.12(a); Michigan Code Ch. 339.2610; Missouri Code Ch. 339.511(2); N.J. S.A. Title 45 Ch. 14F–10(b).

[108] 12 U.S.C. 3353(d).

[109] 12 U.S.C. 3353(c). However, nothing in the proposed rule would prohibit a Federally regulated AMC from registering with a State if the State permitted it to do so.

valuation independence requirements of TILA section 129E are met.[110]

2. Section 34.215(b): Ownership Limitations for Federally Regulated AMCs

Section 34.215(b) reflects a non-substantive revision to the proposal. This provision implements limitations on inclusion in the AMC National Registry for Federally regulated AMCs pursuant to section 1124(d) and reorganizes them into a separate section for Federally regulated AMCs.[111] The proposed rule folded the limitations on Federally regulated AMCs into proposed § 34.215 (Registration limitations), which also addressed limitations on AMCs that are required to register with a State.

For clarity, the final rule separates the ownership limitations on AMCs required to register with States (proposed § 32.215; finalized in § 34.214) from the ownership limitations on Federally regulated AMCs that can be included on the AMC National Registry (§ 34.215(b)). Specifically, § 34.215(b) states that a Federally regulated AMC shall not be included on the AMC National Registry if such AMC, in whole or in part, directly or indirectly, is owned by any person who has had an appraiser license or certificate refused, denied, cancelled, surrendered in lieu of revocation, or revoked in any State for a substantive cause, as determined by the State. Section 34.215(b) also provides that an AMC is not barred by § 34.215(b) from being included on the AMC National Registry if the license or certificate of the appraiser with an ownership interest in the AMC has been reinstated by the State or States in which the appraiser was licensed or certified.

3. Section 34.215(c): Reporting Information for the AMC National Registry

As part of being included on the AMC National Registry, the proposed rule required Federally regulated AMCs to provide to each participating State in which the AMC operates the information required by the ASC for administration of the AMC National Registry. Specifically, under proposed § 34.214(b), Federally regulated AMCs would have been required to provide information relating to the determination of the AMC National Registry fee and the information needed to determine whether the ownership limitations under proposed § 34.215 (finalized as § 34.215(b), discussed above) apply. Finally, the proposed rule directed Federally regulated AMCs to contact the ASC concerning alternative means for submitting the information outlined in § 34.214(b), in the event a State did not convey the information.

The Agencies received comments concerning the requirement that States convey information on Federally regulated AMCs to the ASC, which many commenters addressed when responding to a specific question in the proposal concerning potential barriers to a State providing the necessary information to the ASC, as discussed below.

The Agencies asked for comment on whether there may be barriers to collecting information on Federally regulated AMCs for the ASC. (*See* Question 10 in the proposal.) A number of commenters expressed the view that the supervision and handling of Federally regulated AMCs should be done by the ASC, not by the States. Other commenters expressed concern that States do not have a way to identify a Federally regulated AMC. Another set of commenters suggested that States would have difficulty with collecting information concerning Federally regulated AMCs because they do not have a process for the collection of such information. A few other commenters argued that States do not have authority over Federally regulated AMCs, which would make it impossible to police the collection requirement. Some commenters suggested that requiring States to collect information on Federally regulated AMCs amounted to an unfunded mandate, particularly if State law prohibited an agency from collecting a fee from an entity it does not license or regulate. These commenters argued that States should be compensated for collecting information from Federally regulated AMCs.

The Agencies note that the proposed and final rules do not implement the statutory requirement for States to collect the AMC National Registry fee, nor do they determine the process for collection. The collection of the fee is provided for pursuant to FIRREA section 1109 and will be implemented by the ASC, not the Agencies as part of this joint rulemaking.[112] In addition, the Agencies note that the requirement for States to collect fees from Federally regulated AMCs is statutory.[113] Under FIRREA section 1109(a)(4)(B), participating States are required to collect an annual ASC fee from each AMC that is registered with the States or operated as a subsidiary of a Federally regulated financial institution.[114]

In FIRREA section 1124(e), the Agencies are charged with jointly promulgating regulations for the reporting of the activities of AMCs to the ASC in determining the payment of the AMC National Registry fee.[115] The Agencies interpret FIRREA sections 1109(a)(4)(B) and 1124(e) together to require States to collect information related to the determination of the fee for Federally regulated AMCs operating in their States.[116] Therefore, in § 34.215(c), the Agencies are adopting the proposal to require Federally regulated AMCs to submit information required for the AMC National Registry to the States in which they operate without substantive change.

Specifically, new § 34.215(c) requires Federally regulated AMCs to report to the State or States in which they operate the information required to be submitted by the State to the ASC, pursuant to policies that will be developed and issued by the ASC regarding the determination of the AMC National Registry fee, including but not necessarily limited to information related to the ownership limitations in § 34.215(b). These ownership limitations relate to determining the AMC National Registry fee because the limitations determine whether an AMC is eligible to be included in the Registry in the first instance.

The Agencies understand commenters' concerns about States collecting information from Federally regulated AMCs and submitting it to the ASC. As discussed, the Agencies interpret the statute to require that participating States have a mechanism for collecting information from identified Federally regulated AMCs operating in their States and submitting it to the ASC. However, the Agencies emphasize that this final rule does not require States to identify Federally regulated AMCs operating in their States, nor are they responsible for supervising or enforcing a Federally regulated AMC's compliance with information submission requirements related to the AMC National Registry. Rather, the Federal agencies overseeing Federally regulated AMCs are responsible for supervising and enforcing the compliance of Federally regulated AMCs with these requirements, including whether the

[110] *See* section 129E of TILA, 15 U.S.C. 1639e (implemented at 12 CFR 1026.42).

[111] 12 U.S.C. 3353(d).

[112] 12 U.S.C. 3338.

[113] *See* section 1109(a)(4)(B), 12 U.S.C. 3338(a)(4)(B).

[114] 12 U.S.C. 3338(a)(4)(B).

[115] *See* FIRREA section 1124(e), 12 U.S.C. 3353(e).

[116] *See* 12 U.S.C. 3338(a)(4)(B), 3353(e).

AMC identifies itself to the State and submits required information. States are also not required to assess whether any licensing issues in that State of owners of a Federally regulated AMC disqualify the AMC from being on the AMC National Registry, pursuant to the ownership limitations in § 34.215(b). The final rule defers to the ASC to determine whether the cause of an appraiser license issue arose was ''substantive.'' The Agencies are sensitive to concerns raised about the cost to States of collecting and remitting information regarding Federally regulated AMCs. The final rule does not bar a State from collecting a fee from Federally regulated AMCs to offset the cost of collecting the AMC National Registry fee and the information related to the fee. In addition, pursuant to section 1109(b)(5), the ASC has the authority to provide grants to State appraiser certifying and licensing agencies to support the efforts of such agencies to comply with Title XI of FIRREA, including in connection with implementation of the AMC National Registry.[117] Finally, the Agencies consulted further with the ASC regarding the proposal to give Federally regulated AMCs the alternative to report information directly to the ASC, for example, when operating in a non-participating State that is not collecting information. Due to operational challenges raised by the ASC, the Agencies are removing this alternative from the final rule. However, the Agencies recognize that practical challenges may arise as the minimum requirements are adopted in States and reporting requirements take effect and will be monitoring these issues.

F. Section 34.216: Information To Be Presented to the ASC by Participating States

Section § 34.216 is adopted without change from proposed rule. Pursuant to § 34.216, States that establish AMC registration and supervision programs are required to submit to the ASC the information regarding AMCs required by ASC regulations and guidance. This provision implements the requirement in section 1124(e) for the Agencies to establish these reporting requirements.

The Agencies did not receive comments specifically relating to § 34.216; however, as discussed above in response to questions concerning potential barriers to State registration and supervision of AMCs, some commenters expressed concern regarding the costs of collecting information related to fees and the registration limitations, as well as the logistics of doing so with respect to Federally regulated AMCs.[118] As discussed above in the section-by-section analysis of § 34.213, the Agencies are aware that there are States that currently charge AMCs a fee to offset administrative costs and could continue to do so. The Agencies also believe that cost concerns may be addressed by the ASC, through its authority to provide grants to States to assist States in complying with Title XI of FIRREA. The Agencies expect that the ASC will work with both the States and the Agencies to address logistical issues as the final rule is implemented.

G. Integration of FDIC and OTS Rules on Appraisals

The FDIC proposed to integrate its appraisal regulations for both nonmember banks and State savings associations. Specifically, the FDIC proposed to rescind 12 CFR part 390, subpart X (part 390, subpart X), of the former OTS regulation entitled ''Appraisals.'' The FDIC did not receive any comments specifically relating to the integration of the former OTS rules on appraisals. The final rule implements this authority by rescinding the former OTS regulatory provisions on appraisals pertaining to State savings associations, as these entities are now covered by the FDIC's appraisal rules.

IV. Statutory Implementation Period

Pursuant to section 1124(f)(1), the limitation that applies to AMCs operating without registering with a participating State will apply as of 36 months from the effective date of this final rule.[119] As a result, States electing to participate have 36 months from August 10, 2015 to establish an AMC registration and supervision program that meets the minimum requirements in this final rule and register AMCs seeking to provide appraisal management services related to Federally related transactions in the State before this limitation begins to apply. Subject to the approval of the FFIEC, the ASC may extend this period by an additional 12 months if it makes a written finding that a State has made substantial progress towards implementing a registration and supervision program for AMCs that meets the standards in Title XI of FIRREA. The compliance date for the final rule for Federally regulated AMCs is 12 months after the effective date of this final rule with respect to practice requirements in § 34.215(a). This 12-month compliance date will allow Federally regulated AMCs time to develop the processes and controls required by this final rule. The compliance date for AMCs that are regulated by States will be determined by each State.

V. Regulatory Analysis

Paperwork Reduction Act

Certain provisions of the final rule contain ''information collection'' requirements within the meaning of the Paperwork Reduction Act (PRA) of 1995 (44 U.S.C. 3501 *et seq.*). Under the PRA, the Agencies may not conduct or sponsor, and, notwithstanding any other provision of law, a person is not required to respond to, an information collection unless the information collection displays a valid Office of Management and Budget (OMB) control number. The information collection requirements contained in this final rule were submitted to OMB for review and approval at the proposed rule stage by the FDIC, FHFA, and OCC pursuant to section 3506 of the PRA and section 1320.11 of the OMB's implementing regulations (5 CFR part 1320). OMB instructed the agencies to examine public comment in response to the proposed rule and describe in the supporting statement of their next collections any public comments received regarding the collection as well as why (or why it did not) incorporate the commenter's recommendation. The Agencies received no public comments regarding the collection. The Board reviewed the proposed rule under the authority delegated to the Board by OMB.

The collection of information requirements in the final rule are found in §§ 34.212–34.216. This information is required to implement section 1473 of the Dodd-Frank Act.

Title of Information Collection: Minimum Requirements for Appraisal Management Companies.

OMB Control Nos.: The Agencies will be seeking new control numbers for these collections.

Frequency of Response: Event generated.

Affected Public: States; businesses or other for-profit and not-for-profit organizations.

Abstract:

State Recordkeeping Requirements

States seeking to register AMCs must have an AMC registration and supervision program. Section 34.213(a) requires each participating State to establish and maintain within its

[117] 12 U.S.C. 3338(b)(5).

[118] The commenters, however, did not offer data on what volume or burden the collection of information and transmission process would be expected to pose.

[119] 12 U.S.C. 3353(f).

appraiser certifying and licensing agency a registration and supervision program with the legal authority and mechanisms to: (i) Review and approve or deny an application for initial registration; (ii) periodically review and renew, or deny renewal of, an AMC's registration; (iii) examine an AMC's books and records and require the submission of reports, information, and documents; (iv) verify an AMC's panel members' certifications or licenses; (v) investigate and assess potential law, regulation, or order violations; (vi) discipline, suspend, terminate, or deny registration renewals of, AMCs that violate laws, regulations, or orders; and (vii) report violations of appraisal-related laws, regulations, or orders, and disciplinary and enforcement actions to the ASC.

Section 34.213(b) requires each participating State to impose requirements on AMCs not owned and controlled by an insured depository institution and regulated by a Federal financial institutions regulatory agency to: (i) Register with and be subject to supervision by a State appraiser certifying and licensing agency in each State in which the AMC operates; (ii) engage only State-certified or State-licensed appraisers for Federally regulated transactions in conformity with any Federally regulated transaction regulations; (iii) establish and comply with processes and controls reasonably designed to ensure that the AMC, in engaging an appraiser, selects an appraiser who is independent of the transaction and who has the requisite education, expertise, and experience necessary to competently complete the appraisal assignment for the particular market and property type; (iv) direct the appraiser to perform the assignment in accordance with USPAP; and (v) establish and comply with processes and controls reasonably designed to ensure that the AMC conducts its appraisal management services in accordance with section 129E(a)-(i) of TILA.

State Reporting Burden

Section 34.216 requires that each State electing to register AMCs for purposes of permitting AMCs to provide appraisal management services relating to covered transactions in the State must submit to the ASC the information required to be submitted under this Subpart and any additional information required by the ASC concerning AMCs.

AMC Reporting Requirements

Section 34.215(c) requires that a Federally regulated AMC must report to the State or States in which it operates the information required to be submitted by the State pursuant to the ASC's policies, including: (i) Information regarding the determination of the AMC National Registry fee; and (ii) the information listed in § 34.214.

Section 34.214 provides that an AMC may not be registered by a State or included on the AMC National Registry if such company is owned, directly or indirectly, by any person who has had an appraiser license or certificate refused, denied, cancelled, surrendered in lieu of revocation, or revoked in any State. Each person that owns more than 10 percent of an AMC shall submit to a background investigation carried out by the State appraiser certifying and licensing agency. While § 34.214 does not authorize States to conduct background investigations of Federally regulated AMCs, it would allow a State to do so if the Federally regulated AMC chooses to register voluntarily with the State.

AMC Recordkeeping Requirements

Section 34.212(b) provides that an appraiser in an AMC's network or panel is deemed to remain on the network or panel until: (i) the AMC sends a written notice to the appraiser removing the appraiser with an explanation; or (ii) receives a written notice from the appraiser asking to be removed or a notice of the death or incapacity of the appraiser. The AMC would retain these notices in its files.

Burden Estimates:

Total Number of Respondents: 500 AMCs, 55 States.

Bureau: Since the Bureau is merely adopting a cross-reference in Regulation Z to the OCC regulatory text, the Bureau is not imposing any new or additional information collection requirements on regulated entities. Therefore, the Bureau is not seeking OMB approval for the information collection requirements already accounted for by the other agencies' information collection requests submitted to OMB in association with this rule.

FDIC Burden Total: 1,545 hours.
FHFA Burden Total: 617 hours.
OCC Burden Total: 1,545 hours.
Board Burden Total: 1,545 hours.
Total Burden: 5,252 hours.

Regulatory Flexibility Act

OCC: The Regulatory Flexibility Act (RFA), 5 U.S.C. 601 *et seq.,* generally requires that, in connection with a rulemaking, an agency prepare and make available for public comment a regulatory flexibility analysis that describes the impact of the rule on small entities. However, the regulatory flexibility analysis otherwise required under the RFA is not required if an agency certifies that the rule will not have a significant economic impact on a substantial number of small entities (defined in regulations promulgated by the Small Business Administration (SBA) to include commercial banks and savings institutions, and trust companies, with assets of $550 million or less and $38.5 million or less, respectively) and publishes its certification and a brief explanatory statement in the **Federal Register** together with the rule.

The OCC currently supervises 1,492 insured depository institutions (1,051 commercial banks and 441 Federal savings associations) of which approximately 1,090 are small entities based on the SBA's definition of small entities for RFA purposes. The OCC classifies the economic impact of total costs on a small entity as significant if the total costs in a single year are greater than 5 percent of total salaries and benefits, or greater than 2.5 percent of total non-interest expense.

As discussed in the **SUPPLEMENTARY INFORMATION** above, section 1473 of the Dodd-Frank Act requires the Agencies to jointly prescribe regulations to implement the minimum requirements for State registration and supervision of AMCs. The final rule meets this obligation by requiring States that elect to register and supervise AMCs to impose certain requirements on AMCs. The final rule also requires participating States to have certain basic supervisory authorities, such as the ability to investigate complaints against AMCs, and take disciplinary action with respect to AMCs that violate applicable laws.

The OCC believes the final rule will not have a significant economic impact on a substantial number of small entities for several reasons. First, the final rule imposes requirements primarily on States, not on national banks or Federal savings associations. Second, to the extent that the final rule imposes burden on national banks or Federal savings associations that own and control an AMC, there are only two such AMCs, and these are owned by large national banks. For these reasons, the OCC believes that the final rule will not have an impact on a substantial number of OCC-supervised small entities. Therefore, the OCC certifies that the final rule would not have a significant economic impact on a substantial number of small entities.

Board: The RFA, 5 U.S.C. 601 *et seq.,* requires an agency to provide and make available for public comment a regulatory flexibility analysis that describes the impact of a proposed rule

on small entities. However, a regulatory flexibility analysis is not required, if the agency certifies that the rule will not have a significant economic impact on a substantial number of small entities (defined in regulations of the SBA to include banking organizations (commercial banks, savings institutions, and trust companies)) with total assets of less than or equal to $550 million and publishes its certification and a short explanatory statement in the **Federal Register** together with the rule.[120] Based on its analysis, and for the reasons stated below, the Board believes that the final rule will not have a significant economic impact on a substantial number of small entities.

The AMC Rule applies to States that elect to establish licensing and certifying authorities to regulate AMCs. In the Board's regulatory flexibility analysis for this Rule, the Board determined that approximately 32 entities would be subject to direct regulation and supervision by Federal financial institutions regulatory agencies. These entities would be subject to direct regulation and supervision under the Rule because the entities are Federally regulated AMCs. The number of these 32 entities that actually would be subject to regulation under the AMC Rule is currently unknown because some of the entities may have a network or panel of contract appraisers that is too small to satisfy a threshold requirement of the AMC Rule and therefore would be exempt from regulation and supervision under the AMC Rule.

Data currently available to the Board indicate that approximately five State member banks operate a Federally regulated AMC. Data available to the Board are not sufficient to estimate how many of the approximately five entities subject to Board regulation and supervision would be classified as ''small entities.''

Generally, the RFA requires an agency to perform a regulatory flexibility analysis of small entity impacts only when the agency's rule directly regulates the small entities. The impact of this final rule on small entities is indirect. This final rule does not impose directly any significant new recordkeeping, reporting, or compliance requirements on small entities, but instead requires participating States to impose certain requirements on AMCs. The final rule also requires participating States to have certain basic supervisory capabilities, such as the ability to investigate complaints against AMCs, and take disciplinary action with respect to AMCs that violate applicable laws and regulations.

Moreover, while certain minimum requirements are imposed on participating States by the language of section 1473 of the Dodd-Frank Act, each State may establish requirements in addition to those required by section 1473. Furthermore, an entity with a network or panel of appraisers that does not meet the numerical test specified in section 1473 may *voluntarily* register with a participating state and the ASC, thus incurring some nominal expenses in establishing and maintaining the required registration information and meeting the minimum operational requirements. Because of these uncertainties, calculation of the impact of the final rule on the average Board-supervised institution or entity is uncertain, although the number of Board-supervised entities directly subject to supervision under the Rule is expected to be less than five.

Based on its analysis, and for the reasons stated above, the Board certifies that the final rule will not have a significant economic impact on a substantial number of small entities.

FDIC: The RFA generally requires that, in connection with a rulemaking, an agency prepare and make available for public comment an initial regulatory flexibility analysis (IRFA) that describes the impact of the final rule on small entities.[121] A regulatory flexibility analysis is not required, however, if the agency certifies that the final rule will not have a significant economic impact on a substantial number of small entities (defined in regulations promulgated by the SBA to include banking organizations with total assets of less than or equal to $550 million) and publishes its certification and a short, explanatory statement in the **Federal Register** together with the final rule.

As of September 30, 2014, there were approximately 3,451 small FDIC-supervised institutions, which include 3,167 State nonmember banks and 284 State-chartered savings institutions. The FDIC analyzed the organizational structure information in the Board of Governors of the Federal Reserve System's National Information Center database. This analysis found that few FDIC-supervised institutions owned or controlled an entity that provides the types of appraisal management services specified in section 1473. Of these institutions, none oversees a network or panel of appraisers that meets the statutory panel size threshold specified in section 1473 for an entity to be an AMC. Therefore, the final rule would not have any impact on any FDIC-supervised institutions. If any FDIC-supervised institution that owns or controls an entity with a network or panel of appraisers that does not meet the statutory panel size threshold specified in section 1473 *voluntarily* decides to register that entity with the States, then the institution may incur some nominal expenses in establishing and maintaining a process for providing the required registration information and meeting the minimum operational requirements.

In addition, the final rule implements the minimum requirements for States to register and supervise AMCs as required by section 1473 of the Dodd-Frank Act. The final rule meets this obligation by requiring States that elect to register and supervise AMCs to impose certain requirements on AMCs. The final rule also requires participating States to have certain basic supervisory authorities, such as the ability to investigate complaints against AMCs and take disciplinary action with respect to AMCs that violate applicable laws.

It is the opinion of the FDIC that the final rule will not have a significant economic impact on a substantial number of small entities that it regulates in light of the fact that no FDIC-supervised institutions own or control an entity with a network or panel of appraisers that meets the statutory panel size threshold specified in section 1473 for an entity to be an AMC. In addition, the final rule imposes requirements primarily on States and not on FDIC-supervised institutions. Accordingly, the FDIC certifies that the final rule would not have a significant economic impact on a substantial number of small entities. Thus, a regulatory flexibility analysis is not required.

Bureau: The RFA generally requires an agency to conduct an IRFA and a final regulatory flexibility analysis (FRFA) of any rule subject to notice-and-comment rulemaking requirements, unless the agency certifies that the rule will not have a significant economic impact on a substantial number of small entities.[122]

[120] U.S. Small Business Administration, Table of Small Business Size Standards Matched to North American Industry Classification System Codes, *available at https://www.sba.gov/sites/default/files/files/Size_Standards_Table.pdf.*

[121] *See* 5 U.S.C. 601 *et seq.*

[122] For purposes of assessing the impacts of the proposed rule on small entities, ''small entities'' is defined in the RFA to include small businesses, small not-for-profit organizations, and small government jurisdictions. 5 U.S.C. 601(6). A ''small business'' is determined by application of SBA regulations and reference to the North American Industry Classification System (NAICS) classifications and size standards. 5 U.S.C. 601(3). A ''small organization'' is any ''not-for-profit enterprise which is independently owned and

Continued

An FRFA is not required because this rule will not have a significant economic impact on a substantial number of small entities.

This final rule implements the minimum requirements to be applied by participating States in the registration and supervision of AMCs, as well as requirements directly applicable to Federally regulated AMCs. The Bureau notes that the final rule does not impose requirements on AMCs (other than Federally regulated AMCs), but instead seeks to encourage States to adopt minimum requirements in their regulation of AMCs. Burden may be generated from the States' exercise of discretion to implement the final rule, based on the States having the option to decline to participate. The Bureau does not view this as burden resulting from the rule itself, however. Nonetheless, to inform the rulemaking and to inform the public, the Bureau exercised its discretion to analyze economic impacts that will be imposed on AMCs by States that implement final rule.[123] For this purpose, the Bureau assumed States that have not yet passed an AMC licensing and registration law (17 States, as of November 2014) would all elect to pass such a law and establish an AMC licensing and supervision program that satisfies the standards of the final rule. This assumption is taken to establish an outer bound. Because the final rule does not require States to adopt the minimum requirements in the final rule, however, it is possible that not all 17 States (as defined in the final rule) would do so.[124]

Various commenters expressed their concerns with State and Federal fees that may be instituted in connection with AMC registration and supervision. This rule does not determine fee amounts for States to charge, require collection of registration fees by the ASC, or authorize the collection of such ASC fees. It instead provides minimum requirements for States to use to regulate AMCs within the State. How a State chooses to implement these requirements, including which if any new State fees to charge, is within the discretion of the States. With respect to the ASC registration fee, the Dodd-Frank Act grants authority to set that fee exclusively to the ASC.[125] Therefore, the Bureau does not consider any fees imposed on AMCs by the ASC (whether directly or through the States for forwarding to the ASC) as an impact of the final rule.

A national association commented explicitly on the fees that AMCs would pay and the fees' effect on consumers:

''150+− AMCs, $2,500 average fee per State (includes application fee, surety bond fees, background checks, secretary of State application fees, administration fees, and etc.)

150 AMCs × $2,500 × 50 States = $18,750,000.00

150 AMCs × 2500 appraisers × $50 ASC fee = $18,750,000.00.''

The Bureau's analysis differs from the commenter's in several ways. First, for the purposes of RFA, the Bureau is concerned only with smaller AMCs, and an AMC with 2,500 appraisers that operates in all 50 States is unlikely to be small under the SBA definition that would include only AMCs with yearly revenues below $7,500,000. Second, the Bureau does not count as a burden imposed by the final rule those registration fees in States that already established AMC registration regimes before adoption of the final rule; thus the multiplier in the first calculation should be 17 rather than 50. Third, the Bureau assumes for its base calculations that only the minimum State rate is caused by the rule (Vermont's $250 fee), thus the multiplier is $250 instead of $2,500. Finally, as mentioned above, the Bureau does not include the ASC fee or, in other words the third line overall (which in any event assumes a fee amount that the ASC has not yet established). Note that the Bureau's use of the minimum State rate for its base calculation of impacts does not imply that the Bureau suggests that the remaining 17 States adopt this rate.

Commenters also discussed the impact of the rule on States and the burden that may result with the implementation of the final rule. While the Bureau acknowledges these comments, for the purposes of making a determination under the RFA, the impact of the final rule on the States is not incorporated into the FRFA because States are not classified as small entities.

As discussed in the proposed rulemaking, State registration fees in States that have not yet passed an AMC licensing and registration law would constitute the primary economic impact of the final rule. As also noted in the proposed rule, such fees in States that have established such laws vary widely. Such State registration and renewal fees are not necessarily for the sole purpose of recovering costs of administering the minimum requirements under the final rule. States can impose charges for a variety of reasons, including to raise revenue (independent of the cost of the registration regime) or to fund the administration of a regime that exceeds the minimum requirements under the final rule. The Bureau believes that the fee charged by Vermont—$125 for registration and $250 for annual renewal—would be sufficient to recover the cost of implementing the final rule in a newly-participating State.[126] The Bureau therefore considered this fee in estimating the economic impact of the final rule in the 17 States that do not yet have AMC registration requirements. As discussed further below, however, the Bureau also considered more

operated and is not dominant in its field.'' 5 U.S.C. 601(4). A ''small governmental jurisdiction'' is the government of a city, county, town, township, village, school district, or special district with a population of less than 50,000. 5 U.S.C. 601(5). Given this definition, participating States are not small governmental jurisdictions and the burden on them is not relevant to this analysis.

[123] The Bureau does not assume costs associated with the final rule's requirements to ensure compliance with USPAP and other regulations, because AMCs would be subject to these standards even without their being referenced in the final rule.

[124] A State could accept the consequences on AMCs' business in the State from not implementing the final rule. FIRREA section 1124(f) provides that three years after the final rule takes effect, AMCs cannot provide services in Federally related transactions unless and until a State has implemented the final rule. However, the Bureau understands that only a minority of mortgage transactions are ''Federally related transactions'' within the meaning of FIRREA. *See, e.g.,* 12 CFR 225.62(f) (transaction must ''[r]equire the services of an appraiser'' to be federally related). *But see id.* at § 225.63(a)(1),(9),(10) (exemptions from FIRREA appraisal requirements for transactions of $250,000 or less, transactions insured by or sold to a U.S. government agency, and transactions that conform to GSE appraisal standards). However, the Bureau believes all States will choose to participate. Several industry comments expressed concerns with the possible consequences if States did not participate. These comments did not establish that it was likely that States would not do so, however. Thus, the Bureau continues to rely on the assumption that the remaining States will choose to participate either within three years or soon thereafter. However, even if this is not the case, the transactions affected until a State did participate would be portfolio loans over $250,000 that are not insured by either the Federal Housing Administration (FHA), the U.S. Department of Veterans Affairs (VA), or the United States Department of Agriculture Rural Housing Service (USDA RHS). These loans represent a small percentage of the market, and therefore inability by certain market participants (certain types of AMCs) to provide appraisal management services in these types of transactions in a non-participating State will not result in a significant economic impact on a substantial number of small entities.

[125] *See* 12 U.S.C. 3338. This provision in FIRREA is not part of the joint rulemaking authority in section 1124 that is the basis for the Agencies' issuance of this final rule.

[126] The application fee in Vermont is $125. *See https://www.sec.state.vt.us/media/188701/amc_application.pdf.* The annualized renewal fee is $250 ($500 for a two-year period). *See https://www.sec.state.vt.us/media/486847/Appraisal-Management-Company-Renewal-Form-077-2014.pdf.* In addition, while some States may elect to impose additional requirements relating to examination and inspection of their AMCs, the Bureau does not believe that the minimum requirements that States must provide would lead to significant costs for AMCs.

conservative estimates of the impact of the final rule using significantly higher fee amounts. The Bureau believes that the 38 States that already have AMC registration requirements would have to do minimal, if any, updating of the requirements due to this rule, as discussed in the preamble. Thus, the Bureau believes that the rule's indirect burden on the AMCs operating in these 38 States is negligible.

As noted in the section-by-section analysis, it is possible that an appraisal firm, which hires employees to perform appraisals, could also oversee more than 15 appraisers engaged as independent contractors in a State, or 25 or more appraisers in two or more States, in a given year. Comments did not establish that such firms—described in the section-by-section analysis as 'hybrid firms'—currently exist to any meaningful extent. The Bureau believes that to the extent such firms do exist, they are either already included in what the Bureau has counted as an AMC, or the firm is unlikely to be considered ''small'' within the meaning of the RFA.

An additional requirement in the final rule is that the State AMC licensing programs have authority and mechanisms to examine books and records of the AMCs, to otherwise obtain information from the AMCs, and to discipline AMCs. The Bureau believes that existing State registration fees generally already account for the cost to the States of having such authority and mechanisms, and that the requirement in the final rule therefore would not lead to higher registration fees in any significant amount.[127] Accordingly, in the 17 States that would adopt new registration and renewal systems, the Bureau believes the renewal fee currently charged in Vermont would cover the State's cost associated with implementing this requirement.

The Bureau notes that the final rule is not prescriptive as to how or when the States must exercise the authority or mechanisms. Exercise of such authority and mechanisms is determined at the discretion of the States, subject to monitoring by the ASC for effectiveness in the judgment or discretion of the ASC. Accordingly, to the extent that State exercise of such authority and mechanisms leads to burden on small entities, such burden would be attributable to such State implementation and/or ASC oversight expectations rather than to the final rule itself. Therefore, State statutes that implement this requirement relating to establishing examination authority and mechanisms are not expected to cause fee increases or new burden above the $250 overall baseline that is assumed for purposes of this analysis.[128]

Similarly, the Bureau believes that other minimum requirements for AMCs under the final rule (verifying the use of licensed or certified status of appraisers, requiring that appraisers comply with USPAP, complying with any contractual review provisions, and establishing and complying with processes to ensure appraisers are qualified and independent and that the AMC acts in compliance with applicable valuation independence regulations), as well as the standard for removing appraisers from the appraiser panel, would not result in new burden on AMCs because these standards merely reinforce existing compliance requirements as well as industry practice.[129] The Bureau further notes that States have discretion to interpret the requirements to establish processes and controls to ensure compliance, subject to monitoring by the ASC for effectiveness in the judgment or discretion of the ASC. Accordingly, to the extent that State interpretations of such requirements leads to burden on small entities, such burden would be attributable to such State implementation and/or ASC oversight expectations rather than to the final rule itself.

Just as these conduct standards would not impose a significant burden on AMCs required to register at the State level, the Bureau does not believe they would impose significant burdens on Federally regulated AMCs either. *See* Interagency Appraisal and Evaluation Guidelines, 75 FR 77450 (Dec. 10, 2010) (Interagency Guidelines). The Interagency Guidelines, part VI, already require Federal financial institutions, when obtaining required appraisals, to select appraisers who are certified or licensed, qualified, in compliance with USPAP, and independent. 75 FR at 77458. Federally regulated AMCs frequently perform appraisals for their affiliates. Therefore, it can be assumed that in delegating these functions to AMCs, these Federal financial institutions also delegated these requirements from part VI of the Interagency Guidelines to these AMCs.

To estimate the impact of the final rule on small AMCs, the Bureau conducted a survey. The Bureau called nine AMCs, selected randomly from a list of approximately 500 AMCs provided by industry trade associations. The AMCs were asked for certain basic data including the number of States in which they operate, their revenue (including the revenue from any non-appraisal business), and the number of appraisals that they performed in 2012.[130] The Bureau estimated the revenue to be the number of appraisals performed in 2012 multiplied by $350—the average appraisal cost assumed in the Agencies' analysis under section 1022 of the Dodd-Frank Act in the 2013 Interagency Appraisals Rule. This revenue estimate is likely to be underestimated, given that several AMCs out of nine reported additional revenue that was not due to the residential appraisal business. Out of the nine AMCs, six had revenues of less than $7,500,000 in 2012, and thus would be within the scope of the RFA analysis based upon SBA guidelines.[131] The Bureau computed the cost of registration and renewal fees in States that do not already have them, allocated these costs to individual AMCs based upon the number of States in which the AMC operated,[132] and computed the ratio of these allocated costs to the AMCs' revenues.

[127] *See, e.g.,* Vermont Statutes Title 26 section 3324 (requiring AMCs to ''retain all records related to an appraisal, review, or consulting assignment for no less than five years . . . [and w]ith reasonable notice, a licensee or registrant shall produce any records governed by this section for inspection and copying by the board or its authorized agent.'').

[128] In addition, the Bureau does not believe that in States that add this requirement there will be any significant new burden on the AMCs. The Bureau believes that the AMCs already keep their books and records in order as a standard course of business practice, and thus the occasional State examiner visits should not impose any significant burden. In addition, the final rule requires only that the State have the authority and mechanism to request records and information. The final rule does not require that the State exercise this authority and any burdensome exercise of this authority would therefore not be caused by the final rule. Finally, to the extent State supervision programs do increase burden, the Bureau believes this burden would be within the sensitivity tolerances described in the footnote at the end of this section.

[129] These requirements also would not result in new burden on Federally regulated AMCs, for the same reason. Federally regulated AMCs do not have to comply with State registration and renewal requirements, which can entail fees. Conservatively, however, the Bureau applied the State fee burden to all of the small AMCs in its calculation method described herein. As a result, the estimated burden of State fees associated with the final rule may be over-estimated.

[130] One of the AMCs did not report its revenue.

[131] NAICS code 531320—Offices of Real Estate Appraisers—includes ''appraisal services,'' which we believe would include services provided by AMCs in the processing and review of appraisals. An alternative classification would be NAICS code 561110—Office Administrative Services. In any event, this code also has an SBA threshold of $7,500,000.

[132] The Bureau assumed that an AMC that operated in x States needs to register in additional (17/55)*x States. This assumption results in a (17/55)*x*$250 State registration and renewal fee burden on an AMC operating in x States.

The Bureau acknowledges that requiring AMCs to send letters to the appraisers that the AMC decides to remove from its panel might add burden in States that do not already have registration requirements (which typically include notice provisions). The Bureau does not possess any evidence on the number of appraisers to whom an AMC would have to send these letters. According to the Bureau of Labor and Statistics' August 2014 preliminary numbers, 1.9 percent of the labor force in the real estate and rental and leasing industry was either laid off or discharged in the most recent month. Thus, the Bureau estimates that an AMC will dismiss approximately a quarter of appraisers from its panel in any given year. The Bureau assumes that each AMC will have several standardized letters explaining the reason for dismissal: for example, changing economic conditions or the appraiser's violation of USPAP or work performance issues. Each AMC might incur a minimal one-time cost to draft these letters, with some industry associations potentially providing templates. After this minimal one-time cost is incurred, the ongoing cost would include a minimal adjustment of the letter based on the appraiser's particular circumstances and the actual printing and mailing cost. These letters also could be sent in batches, periodically, such as on an annual basis. Thus, for the purposes of this analysis, the Bureau implicitly accounts for these costs in the sensitivity analyses below (which use a State fee of $5,150 and include a $300 administrative expense).

The Bureau then fit the received ratios using three different distributions: normal, generalized extreme value, and logistic. The three different distributions were used because no a priori assumptions regarding how these ratios are distributed can be made. The three distributions mentioned above are commonly used by empirical researchers to fit observed values. Considering the costs imposed by the States as a result of the final rule, the Bureau believes that less than 1 percent of the small entities would experience a cost of over 1 percent of their revenue, using either the normal, or the logistic, or the generalized extreme value distributions.[133] The Bureau also notes that because the sample did not include any AMCs that were either too small (for example, with 15 or fewer appraisers in one State) or that were Federally regulated AMCs, these estimates are likely overstated.

Certification

Accordingly, the Bureau Director, by signing below, certifies that this final rule would not have a significant economic impact on a substantial number of small entities.

FHFA: The RFA (5 U.S.C. 601 *et seq.*) requires an agency to analyze a proposed regulation's impact on small entities if the final rule is expected to have a significant economic impact on a substantial number of small entities.[134] A regulatory flexibility analysis is not required if the agency certifies that the final rule will not have a significant economic impact on a substantial number of small entities and publishes its certification and a short statement in the **Federal Register** together with the final rule.

The rule implements section 1124 of FIRREA and establishes minimum requirements to be imposed by a participating State appraiser certifying and licensing agency on AMCs doing business in the State. FHFA has considered the impact of this regulation and determined that it is not likely to have a significant economic impact on a substantial number of small entities because States and FHFA's regulated entities—Fannie Mae, Freddie Mac, and the Federal Home Loan Banks—are not small entities for purposes of the RFA. *See* 5 U.S.C. 601(6).

NCUA: The RFA[135] requires NCUA to provide a regulatory flexibility analysis to certify that a rulemaking will not have a significant economic impact on a substantial number of small entities (defined for purposes of the RFA to include credit unions with assets less than $50 million) and publish its certification and a short explanatory statement in the **Federal Register** with the final rule.[136] As explained above, the requirements of this rule would only apply directly to AMC subsidiaries owned and controlled by an insured depository institution, or an insured credit union, *and* regulated by a Federal financial institutions regulatory agency. NCUA, unlike the other banking agencies to this rulemaking, does not directly oversee or regulate any subsidiaries owned and controlled by credit unions, including AMC subsidiaries. Rather, NCUA's regulations permit Federal credit unions to invest in or lend only to CUSOs that conform to specific requirements outlined in part 712 of the NCUA's regulations. Because NCUA does not directly regulate or oversee CUSOs owned by State or Federally chartered credit unions, NCUA is not adopting regulatory text or any requirements through this rulemaking that would directly affect small entities. Accordingly, the NCUA Board certifies the rule will not have a significant economic impact on a substantial number of small entities.

Unfunded Mandates Reform Act of 1995 Determination

OCC: The OCC has analyzed the final rule under the factors in the Unfunded Mandates Reform Act of 1995 (UMRA) (2 U.S.C. 1532). Under this analysis, the OCC considered whether the final rule includes Federal mandates that may result in the expenditure by State, local, and tribal governments, in the aggregate, or by the private sector, of $100 million or more in any one year (adjusted annually for inflation). For the following reasons, the OCC finds that the final rule does not trigger the $100 million UMRA threshold. First, the mandates in the final rule apply only to those States that choose to establish an AMC registration system. Second, the costs specifically related to requirements set forth in law are excluded from expenditures under the UMRA. Although the OCC estimates that expenditures by State governments could be $82 million in one year, the UMRA cost estimate for the final rule is zero, given that the final rule's mandates are set forth in section 1473. For this reason, and for the other reasons cited above, the OCC has determined that this final rule will not result in expenditures by State, local, and tribal governments, or the private sector, of $100 million or more in any one year. Accordingly, this

[133] The Bureau notes that the percentage of small institutions for which the estimated burden of the final rule would amount to over 3 percent of the revenue would remain under 1 percent even if the Bureau had used the following alternative assumptions: (1) $5,150 as the assumed burden of the proposed rule for states that adopt new registration regimes—the highest among the existing state registration fees (in Minnesota, per *http://mn.gov/elicense/licenses/licensedetail.jsp?URI=tcm:29-9313&CT_URI=tcm:27-117-32*), and assumed this same amount as the annual renewal fee (even though the Minnesota renewal fee is only $2,650, per *http://mn.gov/elicense/licenses/licensedetail.jsp?URI=tcm:29-9313&CT_URI=tcm:27-117-32*); and (2) an additional annual labor cost of $300 for any possible associated burden of (a) filling out registration and renewal forms in those states (assuming an AMC operates in approximately 20 states on average, such that 6.26 of those states adopt new AMC licensing programs) and any additional burden related to notices from small AMCs removing appraisers from their panels in those states. The percentages of institutions for which this cost would amount to over 1 percent of the revenue changed, respectively, to 26 percent, 18 percent, and 15 percent of the small institutions affected, according to the normal, generalized extreme value, and logistic distributions.

[134] 5 U.S.C. 605(b).

[135] 5 U.S.C. 601 *et seq.*

[136] 78 FR 4032 (Jan. 18, 2013).

final rule is not subject to section 202 of the UMRA.

List of Subjects

12 CFR Part 34

Appraisal, Appraiser, Banks, Banking, Consumer protection, Credit, Mortgages, National banks, Reporting and recordkeeping requirements, Savings associations, Truth in lending.

12 CFR Part 208

Accounting, Agriculture, Banks, Banking, Confidential business information, Consumer protection, Crime, Currency, Insurance, Investments, Mortgages, Reporting and recordkeeping requirements, Securities.

12 CFR Part 225

Administrative practice and procedure, Banks, Banking, Federal Reserve System, Holding companies, Reporting and recordkeeping requirements, Securities.

12 CFR Part 323

Banks, Banking, Mortgages, Reporting and recordkeeping requirements, Savings associations.

12 CFR Part 1026

Advertising, Appraisal, Appraiser, Banks, Banking, Consumer protection, Credit, Credit unions, Mortgages, National banks, Reporting and recordkeeping requirements, Savings associations, Truth in lending.

12 CFR Part 1222

Appraisals, Government sponsored enterprises, Mortgages.

Department of the Treasury

Office of the Comptroller of the Currency

Authority and Issuance

For the reasons set forth in the preamble, the OCC is amending 12 CFR part 34 as follows:

PART 34—REAL ESTATE LENDING AND APPRAISALS

■ 1. The authority citation for part 34 is revised to read as follows:

Authority: 12 U.S.C. 1 *et seq.,* 25b, 29, 93a, 371, 1462a, 1463, 1464, 1465, 1701j–3, 1828(o), 3331 *et seq.,* 5101 *et seq.,* and 5412(b)(2)(B) and 15 U.S.C. 1639h.

■ 2. Subpart H to part 34 is added to read as follows:

Subpart H—Appraisal Management Company Minimum Requirements

Sec.

34.210 Authority, purpose, and scope.
34.211 Definitions.
34.212 Appraiser panel—annual size calculation.
34.213 Appraisal management company registration.
34.214 Ownership limitations for State-registered appraisal management companies.
34.215 Requirements for Federally regulated appraisal management companies.
34.216 Information to be presented to the Appraisal Subcommittee by participating States.

§ 34.210 Authority, purpose, and scope.

(a) *Authority.* This subpart is issued by the Office of the Comptroller of the Currency under 12 U.S.C. 93a and Title XI of the Financial Institutions Reform, Recovery, and Enforcement Act (FIRREA), as amended by the Dodd-Frank Wall Street Reform and Consumer Protection Act (the Dodd-Frank Act) (Pub. L. 111–203, 124 Stat. 1376 (2010)), 12 U.S.C. 3331 *et seq.*

(b) *Purpose.* The purpose of this subpart is to implement sections 1109, 1117, 1121, and 1124 of FIRREA Title XI, 12 U.S.C. 3338, 3346, 3350, and 3353.

(c) *Scope.* This subpart applies to States and to appraisal management companies (AMCs) providing appraisal management services in connection with consumer credit transactions secured by a consumer's principal dwelling or securitizations of those transactions.

(d) *Rule of construction.* Nothing in this subpart should be construed to prevent a State from establishing requirements in addition to those in this subpart. In addition, nothing in this subpart should be construed to alter guidance in, and applicability of, the Interagency Appraisal and Evaluation Guidelines [3] or other relevant agency guidance that cautions banks, bank holding companies, Federal savings associations, state savings associations, and credit unions, as applicable, that each such entity is accountable for overseeing the activities of third-party service providers and ensuring that any services provided by a third party comply with applicable laws, regulations, and supervisory guidance applicable directly to the financial institution.

§ 34.211 Definitions.

For purposes of this subpart:

(a) *Affiliate* has the meaning provided in 12 U.S.C. 1841.

(b) *AMC National Registry* means the registry of State-registered AMCs and Federally regulated AMCs maintained by the Appraisal Subcommittee.

[3] *See http://www.occ.gov/news-issuances/bulletins/2010/bulletin-2010-42.html.*

(c)(1) *Appraisal management company* (AMC) means a person that:

(i) Provides appraisal management services to creditors or to secondary mortgage market participants, including affiliates;

(ii) Provides such services in connection with valuing a consumer's principal dwelling as security for a consumer credit transaction or incorporating such transactions into securitizations; and

(iii) Within a given 12-month period, as defined in § 34.212(d), oversees an appraiser panel of more than 15 State-certified or State-licensed appraisers in a State or 25 or more State-certified or State-licensed appraisers in two or more States, as described in § 34.212;

(2) An AMC does not include a department or division of an entity that provides appraisal management services only to that entity.

(d) *Appraisal management services* means one or more of the following:

(1) Recruiting, selecting, and retaining appraisers;

(2) Contracting with State-certified or State-licensed appraisers to perform appraisal assignments;

(3) Managing the process of having an appraisal performed, including providing administrative services such as receiving appraisal orders and appraisal reports, submitting completed appraisal reports to creditors and secondary market participants, collecting fees from creditors and secondary market participants for services provided, and paying appraisers for services performed; and

(4) Reviewing and verifying the work of appraisers.

(e) *Appraiser panel* means a network, list or roster of licensed or certified appraisers approved by an AMC to perform appraisals as independent contractors for the AMC. Appraisers on an AMC's ''appraiser panel'' under this part include both appraisers accepted by the AMC for consideration for future appraisal assignments in covered transactions or for secondary mortgage market participants in connection with covered transactions and appraisers engaged by the AMC to perform one or more appraisals in covered transactions or for secondary mortgage market participants in connection with covered transactions. An appraiser is an independent contractor for purposes of this subpart if the appraiser is treated as an independent contractor by the AMC for purposes of Federal income taxation.

(f) *Appraisal Subcommittee* means the Appraisal Subcommittee of the Federal Financial Institutions Examination Council.

(g) *Consumer credit* means credit offered or extended to a consumer primarily for personal, family, or household purposes.

(h) *Covered transaction* means any consumer credit transaction secured by the consumer's principal dwelling.

(i) *Creditor* means:

(1) A person who regularly extends consumer credit that is subject to a finance charge or is payable by written agreement in more than four installments (not including a down payment), and to whom the obligation is initially payable, either on the face of the note or contract, or by agreement when there is no note or contract.

(2) A person regularly extends consumer credit if the person extended credit (other than credit subject to the requirements of 12 CFR 1026.32) more than 5 times for transactions secured by a dwelling in the preceding calendar year. If a person did not meet these numerical standards in the preceding calendar year, the numerical standards shall be applied to the current calendar year. A person regularly extends consumer credit if, in any 12-month period, the person originates more than one credit extension that is subject to the requirements of 12 CFR 1026.32 or one or more such credit extensions through a mortgage broker.

(j) *Dwelling* means:

(1) A residential structure that contains one to four units, whether or not that structure is attached to real property. The term includes an individual condominium unit, cooperative unit, mobile home, and trailer, if it is used as a residence.

(2) A consumer can have only one ''principal'' dwelling at a time. Thus, a vacation or other second home would not be a principal dwelling. However, if a consumer buys or builds a new dwelling that will become the consumer's principal dwelling within a year or upon the completion of construction, the new dwelling is considered the principal dwelling for purposes of this section.

(k) *Federally regulated AMC* means an AMC that is owned and controlled by an insured depository institution, as defined in 12 U.S.C. 1813 and regulated by the Office of the Comptroller of the Currency, the Board of Governors of the Federal Reserve System, or the Federal Deposit Insurance Corporation.

(l) *Federally related transaction regulations* means regulations established by the Office of the Comptroller of the Currency, the Board of Governors of the Federal Reserve System, the Federal Deposit Insurance Corporation, or the National Credit Union Administration, pursuant to sections 1112, 1113, and 1114 of FIRREA Title XI, 12 U.S.C. 3341–3343.

(m) *Person* means a natural person or an organization, including a corporation, partnership, proprietorship, association, cooperative, estate, trust, or government unit.

(n) *Secondary mortgage market participant* means a guarantor or insurer of mortgage-backed securities, or an underwriter or issuer of mortgage-backed securities. Secondary mortgage market participant only includes an individual investor in a mortgage-backed security if that investor also serves in the capacity of a guarantor, insurer, underwriter, or issuer for the mortgage-backed security.

(o) *States* mean the 50 States and the District of Columbia and the territories of Guam, Mariana Islands, Puerto Rico, and the U.S. Virgin Islands.

(p) *Uniform Standards of Professional Appraisal Practice* (USPAP) means the appraisal standards promulgated by the Appraisal Standards Board of the Appraisal Foundation.

§ 34.212 Appraiser panel—annual size calculation.

For purposes of determining whether, within a 12-month period, an AMC oversees an appraiser panel of more than 15 State-certified or State-licensed appraisers in a State or 25 or more State-certified or State-licensed appraisers in two or more States pursuant to § 34.211(c)(1)(iii)—

(a) An appraiser is deemed part of the AMC's appraiser panel as of the earliest date on which the AMC:

(1) Accepts the appraiser for the AMC's consideration for future appraisal assignments in covered transactions or for secondary mortgage market participants in connection with covered transactions; or

(2) Engages the appraiser to perform one or more appraisals on behalf of a creditor for a covered transaction or secondary mortgage market participant in connection with covered transactions.

(b) An appraiser who is deemed part of the AMC's appraiser panel pursuant to paragraph (a) of this section is deemed to remain on the panel until the date on which the AMC:

(1) Sends written notice to the appraiser removing the appraiser from the appraiser panel, with an explanation of its action; or

(2) Receives written notice from the appraiser asking to be removed from the appraiser panel or notice of the death or incapacity of the appraiser.

(c) If an appraiser is removed from an AMC's appraiser panel pursuant to paragraph (b) of this section, but the AMC subsequently accepts the appraiser for consideration for future assignments or engages the appraiser at any time during the twelve months after the AMC's removal, the removal will be deemed not to have occurred, and the appraiser will be deemed to have been part of the AMC's appraiser panel without interruption.

(d) The period for purposes of counting appraisers on an AMC's appraiser panel may be the calendar year or a 12-month period established by law or rule of each State with which the AMC is required to register.

§ 34.213 Appraisal management company registration.

Each State electing to register AMCs pursuant to paragraph (b)(1) of this section must:

(a) Establish and maintain within the State appraiser certifying and licensing agency a licensing program that is subject to the limitations set forth in § 34.214 and with the legal authority and mechanisms to:

(1) Review and approve or deny an AMC's application for initial registration;

(2) Review and renew or review and deny an AMC's registration periodically;

(3) Examine the books and records of an AMC operating in the State and require the AMC to submit reports, information, and documents;

(4) Verify that the appraisers on the AMC's appraiser panel hold valid State certifications or licenses, as applicable;

(5) Conduct investigations of AMCs to assess potential violations of applicable appraisal-related laws, regulations, or orders;

(6) Discipline, suspend, terminate, or deny renewal of the registration of an AMC that violates applicable appraisal-related laws, regulations, or orders; and

(7) Report an AMC's violation of applicable appraisal-related laws, regulations, or orders, as well as disciplinary and enforcement actions and other relevant information about an AMC's operations, to the Appraisal Subcommittee.

(b) Impose requirements on AMCs that are not owned and controlled by an insured depository institution and not regulated by a Federal financial institutions regulatory agency to:

(1) Register with and be subject to supervision by the State appraiser certifying and licensing agency;

(2) Engage only State-certified or State-licensed appraisers for Federally related transactions in conformity with any Federally related transaction regulations;

(3) Establish and comply with processes and controls reasonably

designed to ensure that the AMC, in engaging an appraiser, selects an appraiser who is independent of the transaction and who has the requisite education, expertise, and experience necessary to competently complete the appraisal assignment for the particular market and property type;

(4) Direct the appraiser to perform the assignment in accordance with USPAP; and

(5) Establish and comply with processes and controls reasonably designed to ensure that the AMC conducts its appraisal management services in accordance with the requirements of section 129E(a) through (i) of the Truth in Lending Act, 15 U.S.C. 1639e(a) through (i), and regulations thereunder.

§ 34.214 Ownership limitations for State-registered appraisal management companies.

(a) *Appraiser certification or licensing of owners.* (1) An AMC subject to State registration pursuant to § 34.213 shall not be registered by a State or included on the AMC National Registry if such AMC, in whole or in part, directly or indirectly, is owned by any person who has had an appraiser license or certificate refused, denied, cancelled, surrendered in lieu of revocation, or revoked in any State for a substantive cause, as determined by the appropriate State appraiser certifying and licensing agency.

(2) An AMC subject to State registration pursuant to § 34.213 is not barred by paragraph (a)(1) of this section from being registered by a State or included on the AMC National Registry if the license or certificate of the appraiser with an ownership interest was not revoked for a substantive cause and has been reinstated by the State or States in which the appraiser was licensed or certified.

(b) *Good moral character of owners.* An AMC shall not be registered by a State if any person that owns more than 10 percent of the AMC—

(1) Is determined by the State appraiser certifying and licensing agency not to have good moral character; or

(2) Fails to submit to a background investigation carried out by the State appraiser certifying and licensing agency.

§ 34.215 Requirements for Federally regulated appraisal management companies.

(a) *Requirements in providing services.* To provide appraisal management services for a creditor or secondary mortgage market participant relating to a covered transaction, a Federally regulated AMC must comply with the requirements in § 34.213(b)(2) through (5).

(b) *Ownership limitations.* (1) A Federally regulated AMC shall not be included on the AMC National Registry if such AMC, in whole or in part, directly or indirectly, is owned by any person who has had an appraiser license or certificate refused, denied, cancelled, surrendered in lieu of revocation, or revoked in any State for a substantive cause, as determined by the Appraisal Subcommittee.

(2) A Federally regulated AMC is not barred by this paragraph (b) from being included on the AMC National Registry if the license or certificate of the appraiser with an ownership interest was not revoked for a substantive cause and has been reinstated by the State or States in which the appraiser was licensed or certified.

(c) *Reporting information for the AMC National Registry.* A Federally regulated AMC must report to the State or States in which it operates the information required to be submitted by the State to the Appraisal Subcommittee, pursuant to the Appraisal Subcommittee's policies regarding the determination of the AMC National Registry fee, including but not necessarily limited to the collection of information related to the limitations set forth in this section, as applicable.

§ 34.216 Information to be presented to the Appraisal Subcommittee by participating States.

Each State electing to register AMCs for purposes of permitting AMCs to provide appraisal management services relating to covered transactions in the State must submit to the Appraisal Subcommittee the information required to be submitted by Appraisal Subcommittee regulations or guidance concerning AMCs that operate in the State.

Board of Governors of the Federal Reserve System

For the reasons set forth in the preamble, the Board amends 12 CFR parts 208 and 225, as follows:

PART 208—MEMBERSHIP OF STATE BANKING INSTITUTIONS IN THE FEDERAL RESERVE SYSTEM (REGULATION H)

■ 3. The authority citation for part 208 is revised to read as follows:

Authority: 12 U.S.C. 24, 36, 92a, 93a, 248(a), 248(c), 321–338a, 371d, 461, 481–486, 601, 611, 1814, 1816, 1818, 1820(d)(9), 1833(j), 1828(o), 1831, 1831o, 1831p–1, 1831r–1, 1831w, 1831x, 1835a, 1882, 2901–2907, 3105, 3310, 3331–3351, 3353, and 3905–3909; 15 U.S.C. 78b, 78l(b), 78l(i), 780–4(c)(5), 78q, 78q–1, 78w, 1681s, 1681w, 6801 and 6805; 31 U.S.C. 5318; 42 U.S.C. 4012a, 4104b, 4106, and 4128.

■ 4. Revise the heading of subpart E to read as follows:

Subpart E—Real Estate Lending, Appraisal Standards, and Minimum Requirements for Appraisal Management Companies

■ 5. Section 208.50 is revised to read as follows:

§ 208.50 Authority, purpose, and scope.

(a) *Authority.* Subpart E of Regulation H (12 CFR part 208, subpart E) is issued by the Board of Governors of the Federal Reserve System pursuant to section 304 of the Federal Deposit Insurance Corporation Improvement Act of 1991, (12 U.S.C 1828(o)), Title XI of the Financial Institutions Reform, Recovery, and Enforcement Act, (12 U.S.C 3331–3351), and section 1473 of the Dodd-Frank Wall Street Reform and Consumer Protection Act, (12 U.S.C. 3353).

(b) *Purpose and scope.* This subpart prescribes standards for real estate lending to be used by state member banks in adopting internal real estate lending policies. The standards applicable to appraisals rendered in connection with Federally related transactions entered into by member banks and the minimum requirements for appraisal management companies are set forth in 12 CFR part 225, subparts G and M respectively (Regulation Y).

PART 225—BANK HOLDING COMPANIES AND CHANGE IN BANK CONTROL (REGULATION Y)

■ 6. The authority citation for part 225 is revised to read as follows:

Authority: 12 U.S.C. 1844(b), 3106 and 3108, 1817(j)(13), 1818(b), 1831i, 1972, 3310, 3331–3351 and 3353; 12 U.S.C. 3901, *et seq.;* and 12 U.S.C. 1841, *et seq.*

■ 7. Subpart M is added to part 225 to read as follows:

Subpart M—Minimum Requirements for Appraisal Management Companies

Sec.

225.190 Authority, purpose, and scope.
225.191 Definitions.
225.192 Appraiser panel—annual size calculation.
225.193 Appraisal management company registration.
225.194 Ownership limitations for State-registered appraisal management companies.
225.195 Requirements for Federally regulated appraisal management companies.

225.196 Information to be presented to the Appraisal Subcommittee by participating States.

§ 225.190 Authority, purpose, and scope.

(a) *Authority.* This subpart is issued by the Board of Governors of the Federal Reserve System (the Board) pursuant to title XI of the Financial Institutions Reform, Recovery, and Enforcement Act of 1989 (FIRREA) (Pub. L. 101–73, 103 Stat. 183 (1989)), 12 U.S.C. 3310, 3331–3351, section 1473 of the Dodd-Frank Wall Street Reform and Consumer Protection Act, 12 U.S.C. 3353, and section 5(b) of the Bank Holding Company Act, 12 U.S.C. 1844(b).

(b) *Purpose and scope.* (1) The purpose of this subpart is to implement sections 1109, 1117, 1121, and 1124 of FIRREA Title XI, 12 U.S.C. 3338, 3346, 3350, and 3353. Title XI provides protection for Federal financial and public policy interests in real estate related transactions by requiring real estate appraisals used in connection with Federally related transactions to be performed in writing, in accordance with uniform standards, by appraisers whose competency has been demonstrated and whose professional conduct will be subject to effective supervision. This subpart implements the requirements of title XI as amended by the Dodd-Frank Wall Street Reform and Consumer Protection Act and applies to all Federally related transactions and to States and to appraisal management companies (AMCs) performing appraisal management services in connection with consumer credit transactions secured by a consumer's principal dwelling or securitizations of those transactions.

(2) This subpart:

(i) Identifies which real estate related financial transactions require the services of an appraiser.

(ii) Prescribes which categories of Federally related transactions shall be appraised by a State-certified appraiser and which by a State-licensed appraiser;

(iii) Prescribes minimum standards for the performance of real estate appraisals in connection with Federal related transactions under the jurisdiction of the Board;

(iv) Prescribes minimum requirements to be applied by participating States in the registration and supervision of AMCs; and

(v) Prescribes minimum requirements to be applied by participating States to report certain information concerning AMCs registered with the States to a national registry of AMCs.

(c) *Rule of construction.* Nothing in this subpart should be construed to prevent a State from establishing requirements in addition to those in this subpart. In addition, nothing in this subpart should be construed to alter guidance in, and applicability of, the Interagency Appraisal and Evaluation Guidelines [1] or other relevant agency guidance that cautions banks and bank holding companies, that each organization is accountable for overseeing the activities of third-party service providers and ensuring that any services provided by a third party comply with applicable laws, regulations, and supervisory guidance applicable directly to the creditor.

§ 225.191 Definitions.

For purposes of this subpart:

(a) *Affiliate* has the meaning provided in 12 U.S.C. 1841.

(b) *AMC National Registry* means the registry of State-registered AMCs and Federally regulated AMCs maintained by the Appraisal Subcommittee.

(c) *Appraisal Foundation* means the Appraisal Foundation established on November 30, 1987, as a not-for-profit corporation under the laws of Illinois.

(d)(1) *Appraisal management company* (AMC) means a person that:

(i) Provides appraisal management services to creditors or to secondary mortgage market participants, including affiliates;

(ii) Provides such services in connection with valuing a consumer's principal dwelling as security for a consumer credit transaction or incorporating such transactions into securitizations; and

(iii) Within a 12-month period, as defined in § 225.192(d), oversees an appraiser panel of more than 15 State-certified or State-licensed appraisers in a State or 25 or more State-certified or State-licensed appraisers in two or more States, as described in § 225.192;

(2) An AMC does not include a department or division of an entity that provides appraisal management services only to that entity.

(e) *Appraisal management services* means one or more of the following:

(1) Recruiting, selecting, and retaining appraisers;

(2) Contracting with State-certified or State-licensed appraisers to perform appraisal assignments;

(3) Managing the process of having an appraisal performed, including providing administrative services such as receiving appraisal orders and appraisal reports, submitting completed appraisal reports to creditors and secondary market participants, collecting fees from creditors and secondary market participants for services provided, and paying appraisers for services performed; and

(4) Reviewing and verifying the work of appraisers.

(f) *Appraiser panel* means a network, list or roster of licensed or certified appraisers approved by an AMC to perform appraisals as independent contractors for the AMC. Appraisers on an AMC's ''appraiser panel'' under this part include both appraisers accepted by the AMC for consideration for future appraisal assignments in covered transactions or for secondary mortgage market participants in connection with covered transactions and appraisers engaged by the AMC to perform one or more appraisals in covered transactions or for secondary mortgage market participants in connection with covered transactions. An appraiser is an independent contractor for purposes of this part if the appraiser is treated as an independent contractor by the AMC for purposes of Federal income taxation.

(g) *Consumer credit* means credit offered or extended to a consumer primarily for personal, family, or household purposes.

(h) *Covered transaction* means any consumer credit transaction secured by the consumer's principal dwelling.

(i) *Creditor* means:

(1) A person who regularly extends consumer credit that is subject to a finance charge or is payable by written agreement in more than four installments (not including a down payment), and to whom the obligation is initially payable, either on the face of the note or contract, or by agreement when there is no note or contract.

(2) A person regularly extends consumer credit if the person extended credit (other than credit subject to the requirements of 12 CFR 1026.32) more than 5 times for transactions secured by a dwelling in the preceding calendar year. If a person did not meet these numerical standards in the preceding calendar year, the numerical standards shall be applied to the current calendar year. A person regularly extends consumer credit if, in any 12-month period, the person originates more than one credit extension that is subject to the requirements of 12 CFR 1026.32 or one or more such credit extensions through a mortgage broker.

(j) *Dwelling* means:

(1) A residential structure that contains one to four units, whether or not that structure is attached to real property. The term includes an individual condominium unit,

[1] *See,* Agencies issue final appraisal and evalutation guidelines, *http://www.federalreserve.gov/newsevents/press/bcreg/20101202a.htm.*

cooperative unit, mobile home, and trailer, if it is used as a residence.

(2) A consumer can have only one ''principal'' dwelling at a time. Thus, a vacation or other second home would not be a principal dwelling. However, if a consumer buys or builds a new dwelling that will become the consumer's principal dwelling within a year or upon the completion of construction, the new dwelling is considered the principal dwelling for purposes of this section.

(k) *Federally regulated AMC* means an AMC that is owned and controlled by an insured depository institution, as defined in 12 U.S.C. 1813 and regulated by the Office of the Comptroller of the Currency, the Board of Governors of the Federal Reserve System, or the Federal Deposit Insurance Corporation.

(l) *Federally related transaction regulations* means regulations established by the Office of the Comptroller of the Currency, the Board of Governors of the Federal Reserve System, the Federal Deposit Insurance Corporation, or the National Credit Union Administration, pursuant to sections 1112, 1113, and 1114 of FIRREA Title XI, 12 U.S.C. 3341–3343.

(m) *Person* means a natural person or an organization, including a corporation, partnership, proprietorship, association, cooperative, estate, trust, or government unit.

(n) *Secondary mortgage market participant* means a guarantor or insurer of mortgage-backed securities, or an underwriter or issuer of mortgage-backed securities. Secondary mortgage market participant only includes an individual investor in a mortgage-backed security if that investor also serves in the capacity of a guarantor, insurer, underwriter, or issuer for the mortgage-backed security.

(o) *States* mean the 50 States and the District of Columbia and the territories of Guam, Mariana Islands, Puerto Rico, and the U.S. Virgin Islands.

(p) *Uniform Standards of Professional Appraisal Practice* (USPAP) means the appraisal standards promulgated by the Appraisal Standards Board of the Appraisal Foundation.

§ 225.192 Appraiser panel—annual size calculation.

For purposes of determining whether, within a 12-month period, an AMC oversees an appraiser panel of more than 15 State-certified or State-licensed appraisers in a State or 25 or more State-certified or State-licensed appraisers in two or more States pursuant to § 225.191(d)(1)(iii)–

(a) An appraiser is deemed part of the AMC's appraiser panel as of the earliest date on which the AMC:

(1) Accepts the appraiser for the AMC's consideration for future appraisal assignments in covered transactions or for secondary mortgage market participants in connection with covered transactions; or

(2) Engages the appraiser to perform one or more appraisals on behalf of a creditor for a covered transaction or secondary mortgage market participant in connection with a covered transaction.

(b) An appraiser who is deemed part of the AMC's appraiser panel pursuant to paragraph (a) of this section is deemed to remain on the panel until the date on which the AMC:

(1) Sends written notice to the appraiser removing the appraiser from the appraiser panel, with an explanation of its action; or

(2) Receives written notice from the appraiser asking to be removed from the appraiser panel or notice of the death or incapacity of the appraiser.

(c) If an appraiser is removed from an AMC's appraiser panel pursuant to paragraph (b) of this section, but the AMC subsequently accepts the appraiser for consideration for future assignments or engages the appraiser at any time during the twelve months after the AMC's removal, the removal will be deemed not to have occurred, and the appraiser will be deemed to have been part of the AMC's appraiser panel without interruption.

(d) The period for purposes of counting appraisers on an AMC's appraiser panel may be the calendar year or a 12-month period established by law or rule of each State with which the AMC is required to register.

§ 225.193 Appraisal management company registration.

Each State electing to register AMCs pursuant to paragraph (b)(1) of this section must:

(a) Establish and maintain within the State appraiser certifying and licensing agency a licensing program that is subject to the limitations set forth in § 225.194 and with the legal authority and mechanisms to:

(1) Review and approve or deny an AMC's application for initial registration;

(2) Review and renew or review and deny an AMC's registration periodically;

(3) Examine the books and records of an AMC operating in the State and require the AMC to submit reports, information, and documents;

(4) Verify that the appraisers on the AMC's appraiser panel hold valid State certifications or licenses, as applicable;

(5) Conduct investigations of AMCs to assess potential violations of applicable appraisal-related laws, regulations, or orders;

(6) Discipline, suspend, terminate, or deny renewal of the registration of an AMC that violates applicable appraisal-related laws, regulations, or orders; and

(7) Report an AMC's violation of applicable appraisal-related laws, regulations, or orders, as well as disciplinary and enforcement actions and other relevant information about an AMC's operations, to the Appraisal Subcommittee.

(b) Impose requirements on AMCs that are not owned and controlled by an insured depository institution and not regulated by a Federal financial institutions regulatory agency to:

(1) Register with and be subject to supervision by the State appraiser certifying and licensing agency;

(2) Engage only State-certified or State-licensed appraisers for Federally related transactions in conformity with any Federally related transaction regulations;

(3) Establish and comply with processes and controls reasonably designed to ensure that the AMC, in engaging an appraiser, selects an appraiser who is independent of the transaction and who has the requisite education, expertise, and experience necessary to competently complete the appraisal assignment for the particular market and property type;

(4) Direct the appraiser to perform the assignment in accordance with USPAP; and

(5) Establish and comply with processes and controls reasonably designed to ensure that the AMC conducts its appraisal management services in accordance with the requirements of section 129E(a)–(i) of the Truth in Lending Act, 15 U.S.C. 1639e(a)–(i), and regulations thereunder.

§ 225.194 Ownership limitations for State-registered appraisal management companies.

(a) *Appraiser certification or licensing of owners.* (1) An AMC subject to State registration pursuant to § 225.193 shall not be registered by a State or included on the AMC National Registry if such AMC, in whole or in part, directly or indirectly, is owned by any person who has had an appraiser license or certificate refused, denied, cancelled, surrendered in lieu of revocation, or revoked in any State for a substantive cause, as determined by the appropriate State appraiser certifying and licensing agency.

(2) An AMC subject to State registration pursuant to § 225.193 is not barred by paragraph (a)(1) of this section from being registered by a State or included on the AMC National Registry if the license or certificate of the appraiser with an ownership interest was not revoked for a substantive cause and has been reinstated by the State or States in which the appraiser was licensed or certified.

(b) *Good moral character of owners.* An AMC shall not be registered by a State if any person that owns more than 10 percent of the AMC—

(1) Is determined by the State appraiser certifying and licensing agency not to have good moral character; or

(2) Fails to submit to a background investigation carried out by the State appraiser certifying and licensing agency.

§ 225.195 Requirements for Federally regulated appraisal management companies.

(a) *Requirements in providing services.* To provide appraisal management services for a creditor or secondary mortgage market participant relating to a covered transaction, a Federally regulated AMC must comply with the requirements in § 225.193(b)(2) through (5).

(b) *Ownership limitations.* (1) A Federally regulated AMC shall not be included on the AMC National Registry if such AMC, in whole or in part, directly or indirectly, is owned by any person who has had an appraiser license or certificate refused, denied, cancelled, surrendered in lieu of revocation, or revoked in any State for a substantive cause, as determined by the ASC.

(2) A Federally regulated AMC is not barred by this paragraph (b) from being included on the AMC National Registry if the license or certificate of the appraiser with an ownership interest was not revoked for a substantive cause and has been reinstated by the State or States in which the appraiser was licensed or certified.

(c) *Reporting information for the AMC National Registry.* A Federally regulated AMC must report to the State or States in which it operates the information required to be submitted by the State to the Appraisal Subcommittee pursuant to the Appraisal Subcommittee's policies regarding the determination of the AMC National Registry fee, including but not necessarily limited to the collection of information related to the limitations set forth in this section.

§ 225.196 Information to be presented to the Appraisal Subcommittee by participating States.

Each State electing to register AMCs for purposes of permitting AMCs to provide appraisal management services relating to covered transactions in the State must submit to the Appraisal Subcommittee the information required to be submitted by Appraisal Subcommittee regulations or guidance concerning AMCs that operate in the State.

Federal Deposit Insurance Corporation

Authority and Issuance

For the reasons set forth in the preamble, the FDIC amends 12 CFR parts 323 and 390 as follows:

PART 323—APPRAISALS

■ 8. Revise the authority citation for part 323 to read as follows:

Authority: 12 U.S.C. 1818, 1819 [''Seventh'' and ''Tenth''] and 3331 *et seq.*

■ 9. Add a heading for new subpart A to read as follows:

Subpart A—Appraisals Generally

§§ 323.1 through 323.7—[Designated as subpart A]

■ 10. Designate §§ 323.1 through 323.7 as new subpart A.

§§ 323.1, 323.3, 323.4, and 323.5—[Amended]

■ 11. Amend §§ 323.1, 323.3, 323.4, and 323.5 by removing ''part'' and adding ''subpart'' in its place in each instance in which it appears.

■ 12. Add subpart B to part 323 to read as follows:

Subpart B—Appraisal Management Company Minimum Requirements

Sec.
323.8 Authority, purpose, and scope.
323.9 Definitions.
323.10 Appraiser panel—annual size calculation.
323.11 Appraisal management company registration.
323.12 Ownership limitations for State-registered appraisal management companies.
323.13 Requirements for Federally regulated appraisal management companies.
323.14 Information to be presented to the Appraisal Subcommittee by participating States.

§ 323.8 Authority, purpose, and scope.

(a) *Authority.* This subpart is issued pursuant to12 U.S.C. 1818, 1819 [''Seventh'' and ''Tenth''] and Title XI of the Financial Institutions Reform, Recovery, and Enforcement Act (FIRREA), as amended by the Dodd-Frank Wall Street Reform and Consumer Protection Act (the Dodd-Frank Act) (Pub. L. 111–203, 124 Stat. 1376 (2010)), 12 U.S.C. 3331 *et seq.*

(b) *Purpose.* The purpose of this subpart is to implement sections 1109, 1117, 1121, and 1124 of FIRREA Title XI, 12 U.S.C. 3338, 3346, 3350, and 3353.

(c) *Scope.* This subpart applies to States and to appraisal management companies (AMCs) providing appraisal management services in connection with consumer credit transactions secured by a consumer's principal dwelling or securitizations of those transactions.

(d) *Rule of construction.* Nothing in this subpart should be construed to prevent a State from establishing requirements in addition to those in this subpart. In addition, nothing in this subpart should be construed to alter guidance in, and applicability of, the Interagency Appraisal and Evaluation Guidelines [1] or other relevant agency guidance that cautions banks, bank holding companies, Federal savings associations, state savings association, and credit unions, as applicable, that each such entity is accountable for overseeing the activities of third-party service providers and ensuring that any services provided by a third party comply with applicable laws, regulations, and supervisory guidance applicable directly to the financial institution.

§ 323.9 Definitions.

For purposes of this subpart:

(a) *Affiliate* has the meaning provided in 12 U.S.C. 1841.

(b) *AMC National Registry* means the registry of State-registered AMCs and Federally regulated AMCs maintained by the Appraisal Subcommittee.

(c)(1) *Appraisal management company* (AMC) means a person that:

(i) Provides appraisal management services to creditors or to secondary mortgage market participants, including affiliates;

(ii) Provides such services in connection with valuing a consumer's principal dwelling as security for a consumer credit transaction or incorporating such transactions into securitizations; and

(iii) Within a given 12-month period, as defined in § 323.10(d), oversees an appraiser panel of more than 15 State-certified or State-licensed appraisers in a State or 25 or more State-certified or State-licensed appraisers in two or more States, as described in § 323.12;

[1] *https://www.fdic.gov/regulations/laws/rules/5000–4800.html.*

(2) An AMC does not include a department or division of an entity that provides appraisal management services only to that entity.

(d) *Appraisal management services* means one or more of the following:

(1) Recruiting, selecting, and retaining appraisers;

(2) Contracting with State-certified or State-licensed appraisers to perform appraisal assignments;

(3) Managing the process of having an appraisal performed, including providing administrative services such as receiving appraisal orders and appraisal reports, submitting completed appraisal reports to creditors and secondary market participants, collecting fees from creditors and secondary market participants for services provided, and paying appraisers for services performed; and

(4) Reviewing and verifying the work of appraisers.

(e) *Appraiser panel* means a network, list or roster of licensed or certified appraisers approved by an AMC to perform appraisals as independent contractors for the AMC. Appraisers on an AMC's ''appraiser panel'' under this part include both appraisers accepted by the AMC for consideration for future appraisal assignments in covered transactions or for secondary mortgage market participants in connection with covered transactions and appraisers engaged by the AMC to perform one or more appraisals in covered transactions or for secondary mortgage market participants in connection with covered transactions. An appraiser is an independent contractor for purposes of this subpart if the appraiser is treated as an independent contractor by the AMC for purposes of Federal income taxation.

(f) *Appraisal Subcommittee* means the Appraisal Subcommittee of the Federal Financial Institutions Examination Council.

(g) *Consumer credit* means credit offered or extended to a consumer primarily for personal, family, or household purposes.

(h) *Covered transaction* means any consumer credit transaction secured by the consumer's principal dwelling.

(i) *Creditor* means:

(1) A person who regularly extends consumer credit that is subject to a finance charge or is payable by written agreement in more than four installments (not including a down payment), and to whom the obligation is initially payable, either on the face of the note or contract, or by agreement when there is no note or contract.

(2) A person regularly extends consumer credit if the person extended credit (other than credit subject to the requirements of 12 CFR 1026.32) more than 5 times for transactions secured by a dwelling in the preceding calendar year. If a person did not meet these numerical standards in the preceding calendar year, the numerical standards shall be applied to the current calendar year. A person regularly extends consumer credit if, in any 12-month period, the person originates more than one credit extension that is subject to the requirements of 12 CFR 1026.32 or one or more such credit extensions through a mortgage broker.

(j) *Dwelling* means:

(1) A residential structure that contains one to four units, whether or not that structure is attached to real property. The term includes an individual condominium unit, cooperative unit, mobile home, and trailer, if it is used as a residence.

(2) A consumer can have only one ''principal'' dwelling at a time. Thus, a vacation or other second home would not be a principal dwelling. However, if a consumer buys or builds a new dwelling that will become the consumer's principal dwelling within a year or upon the completion of construction, the new dwelling is considered the principal dwelling for purposes of this section.

(k) *Federally regulated AMC* means an AMC that is owned and controlled by an insured depository institution, as defined in 12 U.S.C. 1813 and regulated by the Office of the Comptroller of the Currency, the Board of Governors of the Federal Reserve System, or the Federal Deposit Insurance Corporation.

(l) *Federally related transaction regulations* means regulations established by the Office of the Comptroller of the Currency, the Board of Governors of the Federal Reserve System, the Federal Deposit Insurance Corporation, or the National Credit Union Administration, pursuant to sections 1112, 1113, and 1114 of FIRREA Title XI, 12 U.S.C. 3341–3343.

(m) *Person* means a natural person or an organization, including a corporation, partnership, proprietorship, association, cooperative, estate, trust, or government unit.

(n) *Secondary mortgage market participant* means a guarantor or insurer of mortgage-backed securities, or an underwriter or issuer of mortgage-backed securities. Secondary mortgage market participant only includes an individual investor in a mortgage-backed security if that investor also serves in the capacity of a guarantor, insurer, underwriter, or issuer for the mortgage-backed security.

(o) *States* mean the 50 States and the District of Columbia and the territories of Guam, Mariana Islands, Puerto Rico, and the U.S. Virgin Islands.

(p) *Uniform Standards of Professional Appraisal Practice* (USPAP) means the appraisal standards promulgated by the Appraisal Standards Board of the Appraisal Foundation.

§ 323.10 Appraiser panel—annual size calculation.

For purposes of determining whether, within a 12-month period, an AMC oversees an appraiser panel of more than 15 State-certified or State-licensed appraisers in a State or 25 or more State-certified or State-licensed appraisers in two or more States pursuant to § 323.9(c)(1)(iii)—

(a) An appraiser is deemed part of the AMC's appraiser panel as of the earliest date on which the AMC:

(1) Accepts the appraiser for the AMC's consideration for future appraisal assignments in covered transactions or for secondary mortgage market participants in connection with covered transactions; or

(2) Engages the appraiser to perform one or more appraisals on behalf of a creditor for a covered transaction or secondary mortgage market participant in connection with a covered transaction.

(b) An appraiser who is deemed part of the AMC's appraiser panel pursuant to paragraph (a) of this section is deemed to remain on the panel until the date on which the AMC:

(1) Sends written notice to the appraiser removing the appraiser from the appraiser panel, with an explanation of its action; or

(2) Receives written notice from the appraiser asking to be removed from the appraiser panel or notice of the death or incapacity of the appraiser.

(c) If an appraiser is removed from an AMC's appraiser panel pursuant to paragraph (b) of this section, but the AMC subsequently accepts the appraiser for consideration for future assignments or engages the appraiser at any time during the twelve months after the AMC's removal, the removal will be deemed not to have occurred, and the appraiser will be deemed to have been part of the AMC's appraiser panel without interruption.

(d) The period for purposes of counting appraisers on an AMC's appraiser panel may be the calendar year or a 12-month period established by law or rule of each State with which the AMC is required to register.

§ 323.11 Appraisal management company registration.

Each State electing to register AMCs pursuant to paragraph (b)(1) of this section must:

(a) Establish and maintain within the State appraiser certifying and licensing agency a licensing program that is subject to the limitations set forth in § 323.12 and with the legal authority and mechanisms to:

(1) Review and approve or deny an AMC's application for initial registration;

(2) Review and renew or review and deny an AMC's registration periodically;

(3) Examine the books and records of an AMC operating in the State and require the AMC to submit reports, information, and documents;

(4) Verify that the appraisers on the AMC's appraiser panel hold valid State certifications or licenses, as applicable;

(5) Conduct investigations of AMCs to assess potential violations of applicable appraisal-related laws, regulations, or orders;

(6) Discipline, suspend, terminate, or deny renewal of the registration of an AMC that violates applicable appraisal-related laws, regulations, or orders; and

(7) Report an AMC's violation of applicable appraisal-related laws, regulations, or orders, as well as disciplinary and enforcement actions and other relevant information about an AMC's operations, to the Appraisal Subcommittee.

(b) Impose requirements on AMCs that are not owned and controlled by an insured depository institution and not regulated by a Federal financial institution regulatory agency to:

(1) Register with and be subject to supervision by the State appraiser certifying and licensing agency;

(2) Engage only State-certified or State-licensed appraisers for Federally regulated transactions in conformity with any Federally related transaction regulations;

(3) Establish and comply with processes and controls reasonably designed to ensure that the AMC, in engaging an appraiser, selects an appraiser who is independent of the transaction and who has the requisite education, expertise, and experience necessary to competently complete the appraisal assignment for the particular market and property type;

(4) Direct the appraiser to perform the assignment in accordance with USPAP; and

(5) Establish and comply with processes and controls reasonably designed to ensure that the AMC conducts its appraisal management services in accordance with the requirements of section 129E(a)–(i) of the Truth in Lending Act, 15 U.S.C. 1639e(a)–(i), and regulations thereunder.

§ 323.12 Ownership limitations for State-registered appraisal management companies.

(a) *Appraiser certification or licensing of owners.* (1) An AMC subject to State registration pursuant to this section shall not be registered by a State or included on the AMC National Registry if such AMC, in whole or in part, directly or indirectly, is owned by any person who has had an appraiser license or certificate refused, denied, cancelled, surrendered in lieu of revocation, or revoked in any State for a substantive cause, as determined by the appropriate State appraiser certifying and licensing agency.

(2) An AMC subject to State registration pursuant to this section is not barred by § 323.11(a)(1) from being registered by a State or included on the AMC National Registry if the license or certificate of the appraiser with an ownership interest was not revoked for a substantive cause and has been reinstated by the State or States in which the appraiser was licensed or certified.

(b) *Good moral character of owners.* An AMC shall not be registered by a State if any person that owns more than 10 percent of the AMC—

(1) Is determined by the State appraiser certifying and licensing agency not to have good moral character; or

(2) Fails to submit to a background investigation carried out by the State appraiser certifying and licensing agency.

§ 323.13 Requirements for Federally regulated appraisal management companies.

(a) *Requirements in providing services.* To provide appraisal management services for a creditor or secondary mortgage market participant relating to a covered transaction, a Federally regulated AMC must comply with the requirements in § 323.11(b)(2) through (5).

(b) *Ownership limitations.* (1) A Federally regulated AMC shall not be included on the AMC National Registry if such AMC, in whole or in part, directly or indirectly, is owned by any person who has had an appraiser license or certificate refused, denied, cancelled, surrendered in lieu of revocation, or revoked in any State for a substantive cause, as determined by the ASC.

(2) A Federally regulated AMC is not barred by § 323.12(b) from being included on the AMC National Registry if the license or certificate of the appraiser with an ownership interest was not revoked for a substantive cause and has been reinstated by the State or States in which the appraiser was licensed or certified.

(c) *Reporting information for the AMC National Registry.* A Federally regulated AMC must report to the State or States in which it operates the information required to be submitted by the State pursuant to the Appraisal Subcommittee's policies regarding the determination of the AMC National Registry fee, including but not necessarily limited to the collection of information related to the limitations set forth in § 323.12, as applicable.

§ 323.14 Information to be presented to the Appraisal Subcommittee by participating States.

Each State electing to register AMCs for purposes of permitting AMCs to provide appraisal management services relating to covered transactions in the State must submit to the Appraisal Subcommittee the information required to be submitted by Appraisal Subcommittee regulations or guidance concerning AMCs that operate in the State.

PART 390—REGULATIONS TRANSFERRED FROM THE OFFICE OF THRIFT SUPERVISION

■ 13. The authority citation for part 390 is revised to read as follows:

Authority: 12 U.S.C. 1819.

Subpart A also issued under 12 U.S.C. 1820.

Subpart B also issued under 12 U.S.C. 1818.

Subpart C also issued under 5 U.S.C. 504; 554–557; 12 U.S.C. 1464; 1467; 1468; 1817; 1818; 1820; 1829; 3349, 4717; 15 U.S.C. 78*l;* 78o–5; 78u–2; 28 U.S.C. 2461 note; 31 U.S.C. 5321; 42 U.S.C. 4012a.

Subpart D also issued under 12 U.S.C. 1817; 1818; 1820; 15 U.S.C. 78*l.*

Subpart E also issued under 12 U.S.C. 1813; 1831m; 15 U.S.C. 78.

Subpart F also issued under 5 U.S.C. 552; 559; 12 U.S.C. 2901 *et seq.*

Subpart G also issued under 12 U.S.C. 2810 *et seq.,* 2901 *et seq.;* 15 U.S.C. 1691; 42 U.S.C. 1981, 1982, 3601–3619.

Subpart I also issued under 12 U.S.C. 1831x.

Subpart J also issued under 12 U.S.C. 1831p–1.

Subpart K also issued under 12 U.S.C. 1817; 1818; 15 U.S.C. 78c; 78l.

Subpart L also issued under 12 U.S.C. 1831p–1.

Subpart M also issued under 12 U.S.C. 1818.

Subpart N also issued under 12 U.S.C. 1821.

Subpart O also issued under 12 U.S.C. 1828.

Subpart P also issued under 12 U.S.C. 1470; 1831e; 1831n; 1831p–1; 3339.

Subpart Q also issued under 12 U.S.C. 1462; 1462a; 1463; 1464.

Subpart R also issued under 12 U.S.C. 1463; 1464; 1831m; 1831n; 1831p–1.

Subpart S also issued under 12 U.S.C. 1462; 1462a; 1463; 1464; 1468a; 1817; 1820; 1828; 1831e; 1831o; 1831p–1; 1881–1884; 3207; 3339; 15 U.S.C. 78b; 78*l;* 78m; 78n; 78p; 78q; 78w; 31 U.S.C. 5318; 42 U.S.C. 4106.

Subpart T also issued under 12 U.S.C. 1462a; 1463; 1464; 15 U.S.C. 78c; 78*l;* 78m; 78n; 78w.

Subpart U also issued under 12 U.S.C. 1462a; 1463; 1464; 15 U.S.C. 78c; 78*l;* 78m; 78n; 78p; 78w; 78d–1; 7241; 7242; 7243; 7244; 7261; 7264; 7265.

Subpart V also issued under 12 U.S.C. 3201–3208.

Subpart W also issued under 12 U.S.C. 1462a; 1463; 1464; 15 U.S.C. 78c; 78*l;* 78m; 78n; 78p; 78w.

Subpart Y also issued under 12 U.S.C.1831o.

Subpart Z also issued under 12 U.S.C. 1462; 1462a; 1463; 1464; 1828 (note).

Subpart X—[Removed and Reserved]

■ 14. Remove and reserve subpart X consisting of §§ 390.440 through 390.447.

Bureau of Consumer Financial Protection

Authority and Issuance

For the reasons stated above, the Bureau amends Regulation Z, 12 CFR part 1026, as follows:

PART 1026—TRUTH IN LENDING (REGULATION Z)

■ 15. The authority citation for part 1026 is revised to read as follows:

Authority: 12 U.S.C. 2601, 2603–2605, 2607, 2609, 2617, 3353, 5511, 5512, 5532, 5581; 15 U.S.C. 1601 *et seq.*

Subpart A—General

■ 16. Section 1026.1 is amended by revising paragraph (a) to read as follows:

§ 1026.1 Authority, purpose, coverage, organization, enforcement, and liability.

(a) *Authority.* This part, known as Regulation Z, is issued by the Bureau of Consumer Financial Protection to implement the Federal Truth in Lending Act, which is contained in title I of the Consumer Credit Protection Act, as amended (15 U.S.C. 1601 *et seq.*). This part also implements title XII, section 1204 of the Competitive Equality Banking Act of 1987 (Pub. L. 100–86, 101 Stat. 552). Furthermore, this part implements certain provisions of the Real Estate Settlement Procedures Act of 1974, as amended (12 U.S.C. 2601 *et seq.*). In addition, this part implements certain provisions of the Financial Institutions Reform, Recovery, and Enforcement Act, as amended (12 U.S.C. 3331 *et seq.*). The Bureau's information-collection requirements contained in this part have been approved by the Office of Management and Budget (OMB) under the provisions of 44 U.S.C. 3501 *et seq.* and have been assigned OMB No. 3170–0015 (Truth in Lending).

* * * * *

Subpart E—Special Rules for Certain Home Mortgage Transactions

■ 17. Section 1026.42 is amended by adding paragraph (h) to read as follows:

§ 1026.42 Valuation independence.

* * * * *

(h) The Bureau issued a joint rule to implement the appraisal management company minimum requirements in the Financial Institutions Reform, Recovery, and Enforcement Act, as amended by section 1473 of the Dodd-Frank Wall Street Reform and Consumer Protection Act. *See* 12 CFR part 34.

Federal Housing Finance Agency

Authority and Issuance

For the reasons set forth in the **SUPPLEMENTARY INFORMATION**, FHFA amends 12 CFR part 1222, as follows:

PART 1222—APPRAISALS

■ 18. The authority citation for part 1222 is revised to read as follows:

Authority: 12 U.S.C. 4501 *et seq.,* 12 U.S.C. 4526 and 15 U.S.C. 1639h.

■ 19. Add subpart B to part 1222 to read as follows:

Subpart B—Appraisal Management Company Minimum Requirements

Sec.

1222.20 Authority, purpose, and scope.
1222.21 Definitions.
1222.22 Appraiser panel—annual size calculation.
1222.23 Appraisal management company registration.
1222.24 Ownership limitations for State-registered appraisal management companies.
1222.25 Requirements for Federally regulated appraisal management companies.
1222.26 Information to be presented to the Appraisal Subcommittee by participating States.

§ 1222.20 Authority, purpose, and scope.

(a) *Authority.* This subpart is issued by the Federal Housing Finance Agency pursuant to 12 U.S.C. 4501 *et seq.,* 12 U.S.C. 4526, and Title XI of the Financial Institutions Reform, Recovery, and Enforcement Act (FIRREA), as amended by the Dodd-Frank Wall Street Reform and Consumer Protection Act (the Dodd-Frank Act) (Pub. L. 111–203, 124 Stat. 1376 (2010)), 12 U.S.C. 3331 *et seq.*

(b) *Purpose.* The purpose of this subpart is to implement sections 1109, 1117, 1121, and 1124 of FIRREA Title XI, 12 U.S.C. 3338, 3346, 3350, and 3353.

(c) *Scope.* This subpart applies to States and to appraisal management companies (AMCs) providing appraisal management services in connection with consumer credit transactions secured by a consumer's principal dwelling or securitizations of those transactions.

(d) *Rule of construction.* Nothing in this subpart should be construed to prevent a State from establishing requirements in addition to those in this subpart. In addition, nothing in this subpart should be construed to alter guidance in, and applicability of, the Interagency Appraisal and Evaluation Guidelines [1] or other relevant agency guidance that cautions banks, bank holding companies, Federal savings associations, state savings associations, and credit unions, as applicable, that each such entity is accountable for overseeing the activities of third-party service providers and ensuring that any services provided by a third party comply with applicable laws, regulations, and supervisory guidance applicable directly to the financial institution.

§ 1222.21 Definitions.

For purposes of this subpart:

(a) *Affiliate* has the meaning provided in 12 U.S.C. 1841.

(b) *AMC National Registry* means the registry of State-registered AMCs and Federally regulated AMCs maintained by the Appraisal Subcommittee.

(c)(1) *Appraisal management company* (AMC) means a person that:

(i) Provides appraisal management services to creditors or to secondary mortgage market participants, including affiliates;

(ii) Provides such services in connection with valuing a consumer's principal dwelling as security for a consumer credit transaction or incorporating such transactions into securitizations; and

(iii) Within a given 12-month period, as defined in § 1222.22(d), oversees an appraiser panel of more than 15 State-certified or State-licensed appraisers in a State or 25 or more State-certified or State-licensed appraisers in two or more States, as described in § 1222.22;

(2) An AMC does not include a department or division of an entity that

[1] 75 FR 77450 (December 10, 2010).

provides appraisal management services only to that entity.

(d) *Appraisal management services* means one or more of the following:

(1) Recruiting, selecting, and retaining appraisers;

(2) Contracting with State-certified or State-licensed appraisers to perform appraisal assignments;

(3) Managing the process of having an appraisal performed, including providing administrative services such as receiving appraisal orders and appraisal reports, submitting completed appraisal reports to creditors and secondary market participants, collecting fees from creditors and secondary market participants for services provided, and paying appraisers for services performed; and

(4) Reviewing and verifying the work of appraisers.

(e) *Appraiser panel* means a network, list or roster of licensed or certified appraisers approved by an AMC to perform appraisals as independent contractors for the AMC. Appraisers on an AMC's ''appraiser panel'' under this part include both appraisers accepted by the AMC for consideration for future appraisal assignments in covered transactions or for secondary mortgage market participants in connection with covered transactions and appraisers engaged by the AMC to perform one or more appraisals in covered transactions or for secondary mortgage market participants in connection with covered transactions. An appraiser is an independent contractor for purposes of this subpart if the appraiser is treated as an independent contractor by the AMC for purposes of Federal income taxation.

(f) *Appraisal Subcommittee* means the Appraisal Subcommittee of the Federal Financial Institutions Examination Council.

(g) *Consumer credit* means credit offered or extended to a consumer primarily for personal, family, or household purposes.

(h) *Covered transaction* means any consumer credit transaction secured by the consumer's principal dwelling.

(i) *Creditor* means:

(1) A person who regularly extends consumer credit that is subject to a finance charge or is payable by written agreement in more than four installments (not including a down payment), and to whom the obligation is initially payable, either on the face of the note or contract, or by agreement when there is no note or contract.

(2) A person regularly extends consumer credit if the person extended credit (other than credit subject to the requirements of 12 CFR 1026.32) more than 5 times for transactions secured by a dwelling in the preceding calendar year. If a person did not meet these numerical standards in the preceding calendar year, the numerical standards shall be applied to the current calendar year. A person regularly extends consumer credit if, in any 12-month period, the person originates more than one credit extension that is subject to the requirements of 12 CFR 1026.32 or one or more such credit extensions through a mortgage broker.

(j) *Dwelling* means:

(1) A residential structure that contains one to four units, whether or not that structure is attached to real property. The term includes an individual condominium unit, cooperative unit, mobile home, and trailer, if it is used as a residence.

(2) A consumer can have only one ''principal'' dwelling at a time. Thus, a vacation or other second home would not be a principal dwelling. However, if a consumer buys or builds a new dwelling that will become the consumer's principal dwelling within a year or upon the completion of construction, the new dwelling is considered the principal dwelling for purposes of this section.

(k) *Federally regulated AMC* means an AMC that is owned and controlled by an insured depository institution, as defined in 12 U.S.C. 1813 and that is regulated by the Office of the Comptroller of the Currency, the Board of Governors of the Federal Reserve System, or the Federal Deposit Insurance Corporation.

(l) *Federally related transaction regulations* means regulations established by the Office of the Comptroller of the Currency, the Board of Governors of the Federal Reserve System, the Federal Deposit Insurance Corporation, or the National Credit Union Administration, pursuant to sections 1112, 1113, and 1114 of FIRREA Title XI, 12 U.S.C. 3341–3343.

(m) *Person* means a natural person or an organization, including a corporation, partnership, proprietorship, association, cooperative, estate, trust, or government unit.

(n) *Secondary mortgage market participant* means a guarantor or insurer of mortgage-backed securities, or an underwriter or issuer of mortgage-backed securities. Secondary mortgage market participant only includes an individual investor in a mortgage-backed security if that investor also serves in the capacity of a guarantor, insurer, underwriter, or issuer for the mortgage-backed security.

(o) *States* mean the 50 States and the District of Columbia and the territories of Guam, Mariana Islands, Puerto Rico, and the U.S. Virgin Islands.

(p) *Uniform Standards of Professional Appraisal Practice* (USPAP) means the appraisal standards promulgated by the Appraisal Standards Board of the Appraisal Foundation.

§ 1222.22 Appraiser panel—annual size calculation.

For purposes of determining whether, within a 12-month period, an AMC oversees an appraiser panel of more than 15 State-certified or State-licensed appraisers in a State or 25 or more State-certified or State-licensed appraisers in two or more States pursuant to § 1222.21(c)(1)(iii)—

(a) An appraiser is deemed part of the AMC's appraiser panel as of the earliest date on which the AMC:

(1) Accepts the appraiser for the AMC's consideration for future appraisal assignments in covered transactions or for secondary mortgage market participants in connection with covered transactions; or

(2) Engages the appraiser to perform one or more appraisals on behalf of a creditor for a covered transaction or secondary mortgage market participant in connection with covered transactions.

(b) An appraiser who is deemed part of the AMC's appraiser panel pursuant to paragraph (a) of this section is deemed to remain on the panel until the date on which the AMC:

(1) Sends written notice to the appraiser removing the appraiser from the appraiser panel, with an explanation of its action; or

(2) Receives written notice from the appraiser asking to be removed from the appraiser panel or notice of the death or incapacity of the appraiser.

(c) If an appraiser is removed from an AMC's appraiser panel pursuant to paragraph (b) of this section, but the AMC subsequently accepts the appraiser for consideration for future assignments or engages the appraiser at any time during the twelve months after the AMC's removal, the removal will be deemed not to have occurred, and the appraiser will be deemed to have been part of the AMC's appraiser panel without interruption.

(d) The period for purposes of counting appraisers on an AMC's appraiser panel may be the calendar year or a 12-month period established by law or rule of each State with which the AMC is required to register.

§ 1222.23 Appraisal management company registration.

Each State electing to register AMCs pursuant to paragraph (b)(1) of this section must:

(a) Establish and maintain within the State appraiser certifying and licensing agency a licensing program that is subject to the limitations set forth in § 1222.24 and with the legal authority and mechanisms to:

(1) Review and approve or deny an AMC's application for initial registration;

(2) Review and renew or review and deny an AMC's registration periodically;

(3) Examine the books and records of an AMC operating in the State and require the AMC to submit reports, information, and documents;

(4) Verify that the appraisers on the AMC's panel hold valid State certifications or licenses, as applicable;

(5) Conduct investigations of AMCs to assess potential violations of applicable appraisal-related laws, regulations, or orders;

(6) Discipline, suspend, terminate, or deny renewal of the registration of an AMC that violates applicable appraisal-related laws, regulations, or orders; and

(7) Report an AMC's violation of applicable appraisal-related laws, regulations, or orders, as well as disciplinary and enforcement actions and other relevant information about an AMC's operations, to the Appraisal Subcommittee.

(b) Impose requirements on AMCs that are not owned and controlled by an insured depository institution and not regulated by a Federal financial institutions regulatory agency to:

(1) Register with and be subject to supervision by the State appraiser certifying and licensing agency;

(2) Engage only State-certified or State-licensed appraisers for Federally related transactions in conformity with any Federally related transaction regulations;

(3) Establish and comply with processes and controls reasonably designed to ensure that the AMC, in engaging an appraiser, selects an appraiser who is independent of the transaction and who has the requisite education, expertise, and experience necessary to competently complete the appraisal assignment for the particular market and property type;

(4) Direct the appraiser to perform the assignment in accordance with USPAP; and

(5) Establish and comply with processes and controls reasonably designed to ensure that the AMC conducts its appraisal management services in accordance with the requirements of section 129E(a)–(i) of the Truth in Lending Act, 15 U.S.C. 1639e(a)–(i), and regulations thereunder.

§ 1222.24 Ownership limitations for State-registered appraisal management companies.

(a) *Appraiser certification or licensing of owners.* (1) An AMC subject to State registration pursuant to § 1222.23 shall not be registered by a State or included on the AMC National Registry if such AMC, in whole or in part, directly or indirectly, is owned by any person who has had an appraiser license or certificate refused, denied, cancelled, surrendered in lieu of revocation, or revoked in any State for a substantive cause, as determined by the appropriate State appraiser certifying and licensing agency.

(2) An AMC subject to State registration pursuant to § 1222.23 is not barred by paragraph (a)(1) of this section from being registered by a State or included on the AMC National Registry if the license or certificate of the appraiser with an ownership interest was not revoked for a substantive cause and has been reinstated by the State or States in which the appraiser was licensed or certified.

(b) *Good moral character of owners.* An AMC shall not be registered by a State if any person that owns more than 10 percent of the AMC—

(1) Is determined by the State appraiser certifying and licensing agency not to have good moral character; or

(2) Fails to submit to a background investigation carried out by the State appraiser certifying and licensing agency.

§ 1222.25 Requirements for Federally regulated appraisal management companies.

(a) *Requirements in providing services.* To provide appraisal management services for a creditor or secondary mortgage market participant relating to a covered transaction, a Federally regulated AMC must comply with the requirements in § 1222.23(b)(2) through (5).

(b) *Ownership limitations.* (1) A Federally regulated AMC shall not be included on the AMC National Registry if such AMC, in whole or in part, directly or indirectly, is owned by any person who has had an appraiser license or certificate refused, denied, cancelled, surrendered in lieu of revocation, or revoked in any State for a substantive cause, as determined by the ASC.

(2) A Federally regulated AMC is not barred pursuant to paragraph (b)(1) of this section from being included on the AMC National Registry if the license or certificate of the appraiser with an ownership interest was not revoked for substantive cause and has been reinstated by the State or States in which the appraiser was licensed or certified.

(c) *Reporting information for the AMC National Registry.* A Federally regulated AMC must report to the State or States in which it operates the information required to be submitted by the State to the Appraisal Subcommittee pursuant to the Appraisal Subcommittee's policies regarding the determination of the AMC National Registry fee, including but not necessarily limited to the collection of information related to the limitations set forth in this section, as applicable.

§ 1222.26 Information to be presented to the Appraisal Subcommittee by participating States.

Each State electing to register AMCs for purposes of permitting AMCs to provide appraisal management services relating to covered transactions in the State must submit to the Appraisal Subcommittee the information required to be submitted by Appraisal Subcommittee regulations or guidance concerning AMCs that operate in the State.

Dated: April 21, 2015.

Thomas J. Curry,

Comptroller of the Currency.

By order of the Board of Governors of the Federal Reserve System, April 29, 2015

Robert deV. Frierson,

Secretary of the Board.

Dated: April 21, 2015.

Robert E. Feldman,

Executive Secretary.

By order of the Board of Directors.

Federal Deposit Insurance Corporation.

Dated: April 14, 2015.

Richard Cordray,

Director, Bureau of Consumer Financial Protection.

Dated: March 23, 2015.

Melvin L. Watt,

Director, Federal Housing Finance Agency.

In concurrence:

Dated: April 22, 2015.

Gerard Poliquin,

Secretary of the Board, NCUA.

[FR Doc. 2015–12719 Filed 6–8–15; 8:45 am]

BILLING CODE 4810–33–P; 6210–01–P; 6714–01–P; 7535–01–P; 4810–AM–P; 8070–01–P

FEDERAL REGISTER

Vol. 80 Tuesday,

No. 110 June 9, 2015

Part III

Department of Health and Human Services

Centers for Medicare & Medicaid Services

42 CFR Part 425

Medicare Program; Medicare Shared Savings Program: Accountable Care Organizations; Final Rule

DEPARTMENT OF HEALTH AND HUMAN SERVICES

Centers for Medicare & Medicaid Services

42 CFR Part 425

[CMS–1461–F]

RIN 0938–AS06

Medicare Program; Medicare Shared Savings Program: Accountable Care Organizations

AGENCY: Centers for Medicare & Medicaid Services (CMS), HHS.

ACTION: Final rule.

SUMMARY: This final rule addresses changes to the Medicare Shared Savings Program including provisions relating to the payment of Accountable Care Organizations participating in the Medicare Shared Savings Program. Under the Medicare Shared Savings Program, providers of services and suppliers that participate in an Accountable Care Organizations continue to receive traditional Medicare fee-for-service payments under Parts A and B, but the Accountable Care Organizations may be eligible to receive a shared savings payment if it meets specified quality and savings requirements.

DATES: *Effective Dates:* With the exception of the amendments to §§ 425.312, 425.704, and 425.708, the provisions of this final rule are effective on August 3, 2015. The amendments to § 425.312 and § 425.708 are effective November 1, 2015. The amendments to § 425.704 are effective January 1, 2016.

Applicability Dates: In the **SUPPLEMENTARY INFORMATION** section of this final rule, we provide a table (Table 1) that lists key changes in this final rule that have an applicability date other than the effective date of this final rule.

FOR FURTHER INFORMATION CONTACT: Dr. Terri Postma or Elizabeth November, 410–786–8084, Email address: *aco@cms.hhs.gov*.

SUPPLEMENTARY INFORMATION:

Table 1 lists key changes that have an applicability date or effective date other than 60 days after the date of publication of this final rule. By indicating a provision is applicable to a performance year (PY) or agreement period, activities related to implementation of the policy may precede the start of the performance year (in the case of an upcoming year) or agreement period or follow the conclusion of the performance year (in the case of a past year) or the agreement period.

TABLE 1—APPLICABILITY AND EFFECTIVE DATES OF SELECT PROVISIONS OF THE FINAL RULE

Preamble section	Section title/description	Effective date	Applicability date
II.B.1	Agreement Requirements (§ 425.116(a) and (b))		PY 2017 and subsequent performance years.
II.D.2	Provision of Aggregate and Beneficiary Identifiable Data (§ 425.702(c)(1)(ii)).		PY 2016 and subsequent performance years.
II.D.3	Claims Data Sharing (§ 425.704)	1/1/2016	
II.D.3	Beneficiary Opportunity to Decline Claims Data Sharing (§ 425.312 and § 425.708).	11/1/2015	
II.E.3	Definitions of Primary Care Physician and Primary Care Services (§ 425.20).		PY 2016 and subsequent performance years.
II.E.4	Consideration of Physician Specialties and Non-Physician Practitioners in the Assignment Process (§ 425.402(b)).		PY 2016 and subsequent performance years.
II.F.2	Modifications to the Track 2 Financial Model (§ 425.606(b)(1)(ii))		Agreement periods starting on or after January 1, 2016.
II.F.7	Waivers of payment rules or other Medicare requirements (§ 425.612)		PY 2017 and subsequent performance years.

Table of Contents

To assist readers in referencing sections contained in this preamble, we are providing a table of contents.

I. Executive Summary and Background
A. Executive Summary
1. Purpose
2. Summary of the Major Provisions
3. Summary of Costs and Benefits
B. Background
1. General Background
2. Statutory Basis for the Medicare Shared Savings Program
3. Overview of the Medicare Shared Savings Program
II. Provisions of the Proposed Regulations and Analysis of Responses to Public Comments
A. Definitions
1. Proposed Definitions
2. Proposed Revisions to Existing Definitions
B. ACO Eligibility Requirements
1. Agreement Requirements
a. Overview
b. Proposed Revisions
2. Sufficient Number of Primary Care Providers and Beneficiaries
a. Overview
b. Proposed Revisions
3. Identification and Required Reporting of ACO Participants and ACO Providers/Suppliers
a. Overview
b. Proposed Revisions
(1) Certified List of ACO Participants and ACO Providers/Suppliers
(2) Managing Changes to ACO Participants
(3) Managing Changes to ACO Providers/Suppliers
(4) Update of Medicare Enrollment Information
4. Significant Changes to an ACO
a. Overview
b. Proposed Revisions
5. Consideration of Claims Billed by Merged/Acquired Medicare-Enrolled Entities
a. Overview
b. Proposed Revisions
6. Legal Structure and Governance
a. Legal Entity and Governing Body
(1) Overview
(2) Proposed Revisions
b. Fiduciary Duties of Governing Body Members
(1) Overview
(2) Proposed Revisions
c. Composition of the Governing Body
(1) Overview
(2) Proposed Revisions
7. Leadership and Management Structure
a. Overview
b. Proposed Revisions
8. Required Process To Coordinate Care
a. Overview
b. Accelerating Health Information Exchange
c. Proposed Revisions
9. Transition of Pioneer ACOs Into the Shared Savings Program
a. Overview
b. Proposed Revisions
C. Establishing and Maintaining the Participation Agreement With the Secretary
1. Background
2. Application Deadlines
a. Overview
b. Proposed Revisions

3. Renewal of Participation Agreements
a. Overview
b. Proposed Revisions
4. Changes to Program Requirements During the 3-Year Agreement
a. Overview
b. Proposed Revisions
D. Provision of Aggregate and Beneficiary Identifiable Data
1. Background
2. Aggregate Data Reports and Limited Identifiable Data
a. Overview
b. Proposed Revisions
3. Claims Data Sharing and Beneficiary Opportunity To Decline Claims Data Sharing
a. Overview
b. Proposed Revisions
E. Assignment of Medicare FFS Beneficiaries
1. Background
2. Basic Criteria for a Beneficiary To Be Assigned to an ACO
3. Definition of Primary Care Services
a. Overview
b. Proposed Revisions
4. Consideration of Physician Specialties and Non-Physician Practitioners in the Assignment Process
a. Overview
b. Proposed Revisions
(1) Including Primary Care Services Furnished by Non-Physician Practitioners in Step 1
(2) Excluding Services Provided by Certain Physician Specialties From Step 2
(3) Other Assignment Methodology Considerations
5. Assignment of Beneficiaries to ACOs That Include FQHCs, RHCs, CAHs, or ETA Hospitals
a. Assignment of Beneficiaries to ACOs That Include FQHCs and RHCs
(1) Overview
(2) Proposed Revisions
b. Assignment of Beneficiaries to ACOs That Include CAHs
c. Assignment of Beneficiaries to ACOs That Include ETA Hospitals
6. Applicability Date for Changes to the Assignment Algorithm
F. Shared Savings and Losses
1. Background
2. Modifications to the Existing Payment Tracks
a. Overview
b. Transition From the One-Sided to Two-Sided Model
(1) Second Agreement Period for Track 1 ACOs
(2) Eligibility Criteria for Continued Participation in Track 1
(3) Maximum Sharing Rate for ACOs in a Second Agreement Period Under Track 1
(4) Eligibility for Continued Participation in Track 1 by Previously Terminated ACOs
c. Modifications to the Track 2 Financial Model
3. Creating Options for ACOs That Participate in Risk-Based Arrangements
a. Overview
b. Assignment of Beneficiaries Under Track 3
(1) Prospective Versus Retrospective Assignment
(2) Exclusion Criteria for Prospectively Assigned Beneficiaries
(3) Timing of Prospective Assignment
(4) Interactions Between Prospective and Retrospective Assignment Models
c. Determining Benchmark and Performance Year Expenditures Under Track 3
d. Risk Adjusting the Updated Benchmark for Track 3 ACOs
e. Final Sharing/Loss Rate and Performance Payment/Loss Recoupment Limit Under Track 3
f. Minimum Savings Rate and Minimum Loss Rate in Track 3
g. Monitoring for Gaming and Avoidance of At-Risk Beneficiaries
4. Modifications to Repayment Mechanism Requirements
a. Overview
b. Amount and Duration of the Repayment Mechanism
c. Permissible Repayment Mechanisms
5. Methodology for Establishing, Updating, and Resetting the Benchmark
a. Overview
b. Modifications to the Rebasing Methodology
(1) Equally Weighting the Three Benchmark Years
(2) Accounting for Shared Savings Payments When Resetting the Benchmark
c. Use of Regional Factors in Establishing, Updating and Resetting Benchmarks
6. Technical Adjustments to the Benchmark and Performance Year Expenditures
7. Ways To Encourage ACO Participation in Performance-Based Risk Arrangements
a. Payment Requirements and Other Program Requirements That May Need To Be Waived in Order To Carry Out the Shared Savings Program
(1) SNF 3-Day Rule
(2) Billing and Payment for Telehealth Services
(3) Homebound Requirement Under the Home Health Benefit
(4) Waivers for Referrals to Post-Acute Care Settings
(5) Solicitation of Comment on Specific Waiver Options
b. Other Options for Improving the Transition to Two-Sided Performance-Based Risk Arrangements.
(1) Beneficiary Attestation
(2) Solicitation of Comment on a Step-Wise Progression for ACOs To Take on Performance Based Risk
G. Additional Program Requirements and Beneficiary Protections
1. Background
2. Public Reporting and Transparency
a. Overview
b. Proposed Revisions
3. Terminating Program Participation
a. Overview
b. Proposed Revisions
(1) Grounds for Termination
(2) Close-Out Procedures and Payment Consequences of Early Termination
4. Reconsideration Review Process
a. Overview
b. Proposed Revisions
5 Monitoring ACO Compliance With Quality Performance Standards
III. Collection of Information Requirements
IV. Regulatory Impact Analysis
A. Statement of Need
B. Overall Impact
C. Anticipated Effects
1. Effects on the Medicare Program
a. Assumptions and Uncertainties
b. Detailed Stochastic Modeling Results
c. Further Considerations
2. Effects on Beneficiaries
3. Effect on Providers and Suppliers
4. Effect on Small Entities
5. Effect on Small Rural Hospitals
6. Unfunded Mandates
D. Alternatives Considered
E. Accounting Statement and Table
F. Conclusion

Regulations Text

Acronyms

ACO Accountable Care Organization
CAHs Critical Access Hospitals
CCM Chronic Care Management
CEHRT Certified Electronic Health Record Technology
CG–CAHPS Clinician and Group Consumer Assessment of Health Providers and Systems
CHIP Children's Health Insurance Program
CMP Civil Monetary Penalties
CMS Centers for Medicare & Medicaid Services
CNM Certified Nurse Midwife
CMS–HCC CMS Hierarchal Condition Category
CPT [Physicians] Current Procedural Terminology (CPT codes, descriptions and other data only are copyright 2013 American Medical Association. All rights reserved.)
CWF Common Working File
DHHS Department of Health and Human Services
DOJ Department of Justice
DSH Disproportionate Share Hospital
DUA Data Use Agreement
EHR Electronic Health Record
ESRD End Stage Renal Disease
ETA Electing Teaching Amendment
FFS Fee-for-service
FQHCs Federally Qualified Health Centers
FTC Federal Trade Commission
GPCI Geographic Practice Cost Index
GPRO Group Practice Reporting Option
HCC Hierarchal Condition Category
HCPCS Healthcare Common Procedure Coding System
HICN Health Insurance Claim Number
HIPAA Health Insurance Portability and Accountability Act of 1996 (Pub. L. 104–191)
HVBP Hospital Value-based Purchasing
IPA Independent Practice Association
IPPS Inpatient Prospective Payment System
IRS Internal Revenue Service
MA Medicare Advantage
MedPAC Medicare Payment Advisory Commission
MLR Minimum Loss Rate
MSP Medicare Secondary Payer
MSR Minimum Savings Rate
MU Meaningful Use
NCQA National Committee for Quality Assurance

NP Nurse Practitioner
NPI National Provider Identifier
NQF National Quality Forum
OIG Office of Inspector General
PA Physician Assistant
PACE Program of All Inclusive Care for the Elderly
PECOS Provider Enrollment, Chain, and Ownership System
PFS Physician Fee Schedule
PGP Physician Group Practice
PHI Protected Health Information
PPS Prospective Payment System
PQRS Physician Quality Reporting System
PRA Paperwork Reduction Act
PSA Primary Service Areas
PY Performance year
RHCs Rural Health Clinics
RIA Regulatory Impact Analysis
SNFs Skilled Nursing Facilities
SSA Social Security Act
SSN Social Security Number
TIN Taxpayer Identification Number
VM Value Modifier

CPT (Current Procedural Terminology) Copyright Notice

Throughout this final rule, we use CPT codes and descriptions to refer to a variety of services. We note that CPT codes and descriptions are copyright 2013 American Medical Association. All Rights Reserved. CPT is a registered trademark of the American Medical Association (AMA). Applicable Federal Acquisition Regulations (FARs) and Defense Federal Acquisition Regulations (DFARs) apply.

I. Executive Summary and Background

A. Executive Summary

1. Purpose

Section 1899 of the Social Security Act (the Act) established the Medicare Shared Savings Program (Shared Savings Program), which promotes accountability for a patient population, fosters coordination of items and services under parts A and B, and encourages investment in infrastructure and redesigned care processes for high quality and efficient health care service delivery. On December 8, 2014, a proposed rule entitled ''Medicare Shared Savings Program: Accountable Care Organization'' appeared in the **Federal Register** (79 FR 72760) (December 2014 proposed rule). The final rule entitled ''Medicare Program; Medicare Shared Savings Program: Accountable Care Organizations,'' which appeared in the **Federal Register** on November 2, 2011 (76 FR 67802) (November 2011 final rule) established the original regulations implementing Shared Savings Program. In the December 2014 proposed rule, we proposed to make revisions to some key policies adopted in the November 2011 final rule (76 FR 67802) to incorporate in our regulations certain guidance that we have issued since the Shared Savings Program was established, and to add new policies to support program compliance and growth.

Our intent in this rulemaking is to make refinements to the Shared Savings Program, to encourage continued and enhanced stakeholder participation, to reduce administrative burden for ACOs while facilitating their efforts to improve care outcomes, and to maintain excellence in program operations while bolstering program integrity.

2. Summary of the Major Provisions

The policies adopted in this final rule codify existing guidance, reduce administrative burden and improve program function and transparency in the following areas: (1) Data-sharing requirements; (2) eligibility and other requirements related to ACO participants and ACO providers/suppliers including clarification of definitions, ACO participant and ACO provider/supplier agreement requirements, identification and reporting of ACO participants and ACO providers/suppliers, including managing changes to the list of ACO participants and ACO providers/suppliers; (3) clarifications and updates to application requirements; (4) eligibility requirements related to the ACO's number of beneficiaries, required processes for coordinating care, the ACO's legal structure and governing body, and its leadership and management structure; (5) the assignment methodology; (6) methodology for determining ACO financial performance; (7) issues related to program integrity and transparency such as public reporting, terminations, and reconsideration review. To achieve these goals, we proposed and are making the following major modifications to our current program rules:

- Clarifying and codifying current guidance related to ACO participant agreements and issues related to the ACO participant and ACO provider/supplier lists. For example, we are finalizing rules for modifying the ACO participant list and requirements related to specific language that must appear in the ACO participant agreements.
- Adding a process for an ACO to renew its 3-year participation agreement for an additional agreement period. Specifically, we articulate rules for renewing the 3 year agreement, including factors that CMS will use to determine whether an ACO may renew its 3-year agreement, such as the ACO's history of compliance with program rules.
- Adding, clarifying, and revising the beneficiary assignment algorithm, including the following:

++ Updating the CPT codes that will be considered to be primary care services. Specifically, we are finalizing a policy that includes TCM codes (CPT codes 99495 and 99496) and the CCM code (CPT code 99490) in the definition of primary care services.

++ Modifying the treatment of claims submitted by certain physician specialties, NP, PAs, and CNSs in the assignment algorithm. Specifically, we are finalizing a policy that would use primary care services furnished by primary care physicians, NPs, PAs, and CNSs under step 1 of the assignment process, after having identified beneficiaries who received at least one primary care service by a physician in the ACO. Additionally, we are finalizing a policy that would exclude certain services provided by certain physician specialties from step 2 of the assignment process.

++ Clarifying how primary care services furnished in federally qualified health centers (FQHCs) and rural health clinics (RHCs) are considered in the assignment process.

- Expanding the kinds of beneficiary-identifiable data that will be made available to ACOs in various reports under the Shared Savings Program as well as simplifying the process for beneficiaries to decline claims data sharing to reduce burden and confusion.
- Adding or changing policies to encourage greater ACO participation in risk-based models by—

++ Offering the opportunity for ACOs to continue participating under a one-sided participation agreement after their first 3-year agreement. Specifically, we are finalizing a policy that would permit ACOs to participate in an additional agreement period under one-sided risk with the same sharing rate (50 percent) as was available to them under the first agreement period; and

++ Modifying the existing two-sided performance-based risk track (Track 2). Specifically, under Track 2, an ACO will have the choice of several symmetrical MSR/MLR options that will apply for the duration of its 3-year agreement period.

++ Offering an alternative performance-based risk model referred to as Track 3. Specifically, we are finalizing the option for ACOs to participate under a two-sided risk model that would incorporate a higher sharing rate (75 percent), prospective assignment of beneficiaries, and the opportunity to apply for a programmatic waiver of the 3-day SNF rule in order to permit payment for otherwise-

covered SNF services when a prospectively assigned beneficiary is admitted to a SNF without a prior 3-day inpatient stay. ACOs in this track will also have the choice of several symmetrical MSR/MLR options that will apply for the duration of their 3-year agreement period.

In addition, in the December 2014 proposed rule we sought comment on a number of options that we had been considering in order to encourage ACOs to take on two-sided performance-based risk under the Shared Savings Program. Based on public comments, we are finalizing the following:

- Resetting the benchmark in a second or subsequent agreement period by integrating previous financial performance and equally weighting benchmarks for subsequent agreement periods; and
- The use of programmatic waiver authority to improve participation in Track 3 by offering regulatory relief from requirements related to the SNF 3-day stay rule.
- We intend to address other modifications to program rules in future rulemaking in the near term to improve ACO willingness to take on performance-based risk including: Modifying the assignment methodology to hold ACOs accountable for beneficiaries that have designated ACO practitioners as being responsible for their care; waiving the geographic requirement for use of telehealth services; and modifying the methodology for resetting benchmarks by incorporating regional trends and costs.

3. Summary of Costs and Benefits

As detailed in Table 10 in section IV. of this final rule, by including the changes detailed in this final rule, the total aggregate median impact would increase to $780 million in net federal savings for CYs 2016 through 2018. Such median estimated federal savings are $240 million greater than the $540 million median net savings estimated at baseline absent the changes adopted in this final rule. A key driver of the anticipated increase in net savings is improved ACO participation levels in a second agreement period. We estimate that at least 90 percent of eligible ACOs will renew their participation in the Shared Savings Program when presented with the new options, primarily under Track 1 and, to a lesser extent, under Track 3. This expansion in the number of ACOs willing to continue their participation in the program is estimated to result in additional improvements in care efficiency of a magnitude significantly greater than the reduced shared loss receipts estimated at baseline and the added shared savings payments flowing from a higher sharing rate in Track 3 and continued one-sided sharing available in Track 1, with all three tracks operating under generally more favorable rebasing parameters including equal base year weighting and adding a portion of savings from the prior agreement period to the baseline.

In addition, at the anticipated mean participation rate of ACOs in the Shared Savings Program, participating ACOs may experience an estimated aggregate average start-up investment and ongoing operating cost of $822 million for CYs 2016 through 2018. Lastly, we estimate an aggregate median impact of $1,130 million in shared savings payments to participating ACOs in the Shared Savings Program for CYs 2016 through 2018. The 10th and 90th percentiles of the estimate distribution, for the same time period, yield shared savings payments to ACOs of $960 million and $1,310 million, respectively. Therefore, the total median ACO shared savings payments of $1,130 million during CYs 2016 through 2018, net of a median $30 million shared losses, coupled with the aggregate average start-up investment and ongoing operating cost of $822 million yields a net private benefit of $278 million.

B. Background

1. General Background

On March 23, 2010, the Patient Protection and Affordable Care Act (Pub. L. 111–148) was enacted, followed by enactment of the Health Care and Education Reconciliation Act of 2010 (Pub. L. 111–152) on March 30, 2010, which amended certain provisions of Pub. L. 111–148. Collectively known as the Affordable Care Act, these public laws include a number of provisions designed to improve the quality of Medicare services, support innovation and the establishment of new payment models, better align Medicare payments with provider costs, strengthen Medicare program integrity, and put Medicare on a firmer financial footing.

2. Statutory Basis for the Medicare Shared Savings Program

Section 3022 of the Affordable Care Act amended Title XVIII of the Act (42 U.S.C. 1395 *et seq.*) by adding new section 1899 to the Act to establish a Shared Savings Program. This program is a key component of the Medicare delivery system reform initiatives included in the Affordable Care Act and is a new approach to the delivery of health care.

3. Overview of the Medicare Shared Savings Program

The purpose of the Shared Savings Program is to promote accountability for a population of Medicare beneficiaries, improve the coordination of FFS items and services, encourage investment in infrastructure and redesigned care processes for high quality and efficient service delivery, and promote higher value care. ACOs that successfully meet quality and savings requirements share a percentage of the achieved savings with Medicare. Under the Shared Savings Program, ACOs share in savings only if they meet both the quality performance standards and generate shareable savings. Consistent with the purpose of the Shared Savings Program, we focused on developing policies aimed at achieving the three-part aim consisting of: (1) Better care for individuals; (2) better health for populations; and (3) lower growth in expenditures.

We viewed the November 2011 final rule as a starting point for the program, and because of the scope and scale of the program and our limited experience with shared savings initiatives under FFS Medicare, we built a great deal of flexibility into the program rules. We anticipated that subsequent rulemaking for the Shared Savings Program would be informed by lessons learned from our experience with the program as well as from testing through the Pioneer ACO Model and other initiatives conducted by the Center for Medicare and Medicaid Innovation (CMS Innovation Center) under section 1115A of the Act.

Over 400 organizations are now participating in the Shared Savings Program. We are gratified by stakeholder interest in this program. As evidenced by the high degree of interest in participation in the Shared Savings Program, we believe that the policies adopted in the November 2011 final rule are generally well-accepted. However, in light of additional experience we have gained during the first few years of the Shared Savings Program, we identified several policy areas for revision in the December 2014 proposed rule (79 FR 72760).

II. Provisions of the Proposed Rule and the Analysis of and Responses to Public Comments

We received a total of 275 timely comments on the December 8, 2014 proposed rule (79 FR 72760). Stakeholders offered comments that addressed both high level issues related to the goals of the Shared Savings Program as well as our specific proposals and request for comment. We

extend our deep appreciation to the public for their interest in the program and the many thoughtful comments that were made to our proposed policies. In some instances, the public comments offered were outside the scope of the proposed rule (for example, suggested revisions to the physician fee schedule or comments regarding the delivery of specific health care services under other Medicare payment systems). These comments will not be addressed in this final rule, but we have shared them with the appropriate subject matter experts in CMS. Summaries of the public comments that are within the scope of this rule and our responses to those comments are set forth in the various sections of this final rule under the appropriate headings. In the introduction to section II of this final rule, we address several global comments related to the Shared Savings Program. The remainder of this section of the final rule is organized to give an overview of each issue and the relevant proposals, to summarize and respond to public comments on the proposals, and to describe our final policy decisions based upon our review of the public comments received.

Comment: Several commenters discussed the future of the Shared Savings Program and its sustainability over the long term. Some commenters requested that CMS articulate a clear plan for the future of the program. Others recommended that CMS engage stakeholders in a dialogue on how CMS intends to design a sustainable Accountable Care Organization (ACO) model that would permit continued participation by ACOs. While some commenters were supportive of and looked at the proposed rule as a good beginning in the dialogue on how to improve the sustainability of the program, other commenters suggested that the proposed rule did not go far enough to correct what they described as the program's misguided design elements.

Several commenters offered opinions or suggestions about the interrelationship of the Shared Savings Program and other Medicare programs and models such as Medicare Advantage, the Pioneer ACO Model, the bundled payment model, and others. Some commenters advocated for speedy incorporation of alternative payment models under section 1899(i) of the Act's authority while others suggested that CMS engage in additional discussion with stakeholders and testing before implementing such changes into the Shared Savings Program in order to ensure protection of the Trust Fund and beneficiaries.

Commenters suggested that CMS continue to consider alignment with other Medicare initiatives and payment models, and to coordinate with commercial payers to align requirements for multi-payer ACOs. In particular, some commenters explained the need for CMS to ensure a level playing field and align the requirements that apply to ACOs and Medicare Advantage plans, particularly with respect to the following:

- Availability of programmatic waivers (and more generally regulatory flexibility).
- Benchmarks (particularly benchmarks based on regional costs).
- Risk adjustment.
- Financial reserve requirements
- Quality standards.
- Beneficiary satisfaction.
- Beneficiary choice.

Commenters expressed concern that misalignment between the Shared Savings Program, other Medicare programs, and commercial programs could have unintended effects on healthcare market dynamics and for the care of beneficiaries.

Response: In 2011, Medicare made almost no payments to providers through alternative payment models, but today such payments represent approximately 20 percent of Medicare payments. Earlier this year, the Secretary announced the ambitious goal of tying 30 percent of Medicare FFS payments to quality and value by 2016 and by 2018 making 50 percent of payments through alternative payment models, such as the Shared Savings Program, created by the Affordable Care Act (*http://www.hhs.gov/news/press/2015pres/03/20150325b.html*). With over 400 ACOs serving over 7 million beneficiaries, the Shared Savings Program plays an important role in meeting the Secretary's recently articulated goal.

As stated during the 2011 rulemaking process, we continue to believe that the Shared Savings Program should provide an entry point for all willing organizations who wish to move in a direction of providing value-driven healthcare. We are also interested in encouraging these organizations to progress to greater performance-based risk to drive quality improvement and efficiency in care delivery. For this reason, we established both a shared savings only (one-sided) model and a shared savings/losses (two-sided) model. This structure provides a pathway for organizations to increasingly take on performance-based risk. In this final rule, we build on these principles and are finalizing a set of policies that we believe aligns with and will advance the Secretary's goals.

Taken together, the comments illuminate overarching issues which require a balance of competing factors and the specific interests of many different stakeholders. We agree with stakeholders that the Shared Savings Program must be structured in a way that that balances various stakeholder interests in a way that both encourages new and continued provider participation in the program and protects beneficiaries with original FFS Medicare and the Medicare Trust Funds. We believe that many design elements discussed in the proposed rule hold promise and deserve continued consideration. We note that many of these suggestions raised by stakeholders are already in the planning stage or being tested in various CMS Innovation Center models, such as the Pioneer Model and the Next Generation ACO Model (announced on March 10, 2015). Testing these designs in various payment models through the CMS Innovation Center is important because it will permit us to make adjustments as needed to ensure that the models work for providers and protect beneficiaries and the Trust Funds. CMS Innovation Center testing will also permit a transparent and fulsome articulation of the design elements in future rulemaking that allows for sufficient public notice and comment prior to broader implementation in the Shared Savings Program. We fully intend to raise many of the design elements suggested by commenters in future rulemaking as the program matures.

We also continue to believe in the importance of maintaining distinctions between the accountable care model in the Shared Savings Program and managed care, such as Medicare Advantage. In the November 2011 final rule (76 FR 67805), we stated that the Shared Savings Program is not a managed care program like the Medicare Advantage program. Medicare FFS beneficiaries retain all rights and benefits under traditional Medicare. Medicare FFS beneficiaries retain the right to see any physician of their choosing, and they do not enroll in the Shared Savings Program. Unlike managed care settings, the assignment of beneficiaries to a Shared Savings Program ACO does not mean that beneficiaries must receive care only from ACO providers/suppliers, nor does it mean that beneficiaries must enroll in the ACO or the Shared Savings Program. The Shared Savings Program is also not a capitated model; providers and suppliers continue to bill and receive FFS payments rather than receiving

lump sum payments based upon the number of assigned beneficiaries. The Shared Savings Program is designed to enhance patient-centered care. For example, it encourages physicians, through the eligibility requirements (for example, the care processes required at § 425.112), to include their patients in decision-making about their health care. While we frequently relied on our experience in other Medicare programs, including Medicare Advantage, to help develop program requirements and design elements for the Shared Savings Program, many Shared Savings Program requirements deviate from those in the other programs precisely because the intent of this program is not to recreate or replace Medicare Advantage.

Finally, we appreciate commenters' concerns that misalignment in incentives across Medicare initiatives has the potential to create unintended consequences for healthcare market dynamics (for example, between Medicare FFS and Medicare Advantage) and for the care of beneficiaries. We believe these concerns underscore the need to take a measured approach to implementing changes into the Shared Savings Program. We also appreciate commenters' enthusiasm for multipayer ACOs, including recommendations for greater alignment between Medicare and private sector initiatives. We are interested in engaging private sector leaders to build on the success of the Shared Savings Program and other alternative payment models to make value-driven care scalable outside of Medicare's purview. To accomplish this, the Secretary recently announced the creation of a Health Care Payment Learning and Action Network. Through the Learning and Action Network, HHS will work with private payers, employers, consumers, providers, states and state Medicaid programs, and other partners to expand alternative payment models through their own aligned work. As articulated by the Secretary, the public and private sectors have a common interest in building a health care system that delivers better care, spends health care dollars more wisely, and results in healthier people.[1] Beginning with the November 2011 final rule, we have sought to align with other CMS and private sector initiatives, beginning with our selection of quality measures. As the program evolves, we look forward to learning from the Learning and Action Network as well as various CMS Innovation Center initiatives that are planning or already testing multipayer concepts and we intend to revisit this issue in future rulemaking.

Comment: Many commenters were supportive of both the Shared Savings Program and our proposals in the December 2014 proposed rule. However, many commenters expressed general concerns related to the financial model as currently designed, stating that the Shared Savings Program places too much risk and burden on providers with too little opportunity for reward in the form of shared savings. Commenters encouraged CMS to modify the Shared Savings Program rules, particularly in a manner that would increase the financial opportunities for ACOs and attract more participants, which would sustain and improve long term participation. A few commenters suggested that CMS act quickly in improving the program's financial models, absent which existing ACOs may decide that the financial risks outweigh the benefits and choose to withdraw from the program.

Commenters offered a variety of specific suggestions for improving the financial sustainability of the program, many of which are related to our proposals and request for comment and are addressed in section II.F. of this final rule. Some commenters recommended that CMS combine various design elements, stating that such changes would be key to encouraging ongoing participation in the program and driving meaningful change by ACOs. Some commenters offered specific suggestions for improving provider or ACO participation. For example, some commenters recommended that CMS provide up-front funding, consider the effect of seasonal commuter beneficiaries (''snowbirds'') on an ACO's performance cost calculations, permit providers to participate in more than one Medicare initiative involving shared savings, or permit certain groups (such as rural ACOs) to participate in Track 1 indefinitely or create a special rural-only track.

Several commenters suggested that the program incorporate more explicit financial incentives for higher quality performance (for example, modifying the ACO's Minimum Savings Rate (MSR), while others requested retention of the current approach but suggested that CMS offer an even higher sharing rate to ACOs demonstrating high quality. Others recommended rewarding high quality organizations regardless of their financial performance.

Response: We believe the changes to the Shared Savings Program tracks and other design elements that recognize an ACO's efforts finalized in section II.F. of this final rule address commenters' requests for improvements to the program's tracks and program sustainability overall. As explained in detail in section II.F., this final rule creates additional opportunities for ACOs to be financially rewarded for their achievement of the three-part aim, including the following:

- A second agreement period under the one-sided model for eligible Track 1 ACOs, with the opportunity to achieve a maximum sharing rate of 50 percent.
- Greater flexibility in choice of MSR/Minimum Loss Rate (MLR) under a two-sided model; and the chance for greater reward (in relation to greater risk) under the newly established Track 3.

Additionally, we are finalizing policies related to resetting ACO benchmarks, including equal weighting the benchmark years, and accounting for shared savings generated under the prior agreement period. The revisions to the methodology for resetting the benchmark are expected to slow the rate at which the benchmark decreases in comparison to rebasing under the program's current methodology. Finally, we note that many ACOs that are currently participating in the program have had access to up-front funding through the CMS Innovation Center Advance Payment Model. The CMS Innovation Center is currently offering additional qualified ACOs the opportunity to apply for up-front funding through the ACO Investment Model. We believe these changes, taken together, will improve the opportunity for ACOs to realize rewards under the program.

We intend to continue to update and revise the Shared Savings Program over time as we gain experience and gain insights from testing that is ongoing in the CMS Innovation Center. In particular, as discussed in more detail in section II.F. of this final rule, based on the comments we received in the proposed rule and our own continued analysis, we believe that in order to encourage ACOs to achieve and maintain savings, it is important to move quickly to a benchmarking methodology that sets and updates ACO benchmarks largely on the basis of trends in regional FFS costs, rather than ACO's historical costs. For this reason we intend to propose and seek comment on a new benchmarking methodology later this summer. We anticipate that the revised benchmark rebasing methodology incorporating the ACO's historical costs and regional FFS costs and trends would apply to ACOs beginning new agreement periods in 2017 or later. ACOs beginning a new

[1] March 25, 2015 HHS press release. *http://www.hhs.gov/news/press/2015pres/03/20150325b.html.*

agreement period in 2016 would convert to the revised methodology at the start of their third agreement period in 2019.

Comment: Several commenters expressed concern regarding the timing of the finalization of program rules in relation to the ability of an ACO or applicant to adjust to them, or the impact that may have on the willingness of organizations to take on greater performance-based risk. Commenters were particularly concerned that ACOs with agreement periods ending in 2015 would not have an adequate amount of time to understand the implications of the final regulations (particularly if moving to two-sided risk) before having to seek renewal of their agreements during the summer of 2015.

Response: We are aware of the timing concerns expressed by stakeholders and strive to give ACOs ample time to make decisions that are in the best interest of their patients, providers and organization. Therefore, we intend to implement final policies with these timing considerations in mind. Most of the policies will take effect for the 2016 performance year; for example, our assignment methodology changes. However, we will defer implementation of some policies, recognizing that ACOs may need more time to come into compliance with the requirements. For example, we believe that modifying agreements with ACO participants and ACO providers/suppliers to comply with the requirements of new § 425.116 may take time. Accordingly, we will not require ACOs to comply with § 425.116(a) and (b) until the 2017 performance year in the case of ACO participants and ACO providers/suppliers that have already agreed to participate in the Shared Savings Program. Similarly, we will not require organizations that are applying or renewing for a January 1, 2016 start date to submit agreements with the updated language as part of the 2016 application and renewal process which occurs the summer and fall of 2015. However, we will expect and require that ACO participant agreements submitted for our review for purposes of adding new ACO participants to the ACO's list of ACO participants for performance years 2017 and subsequent years will comply with the new rules. For example, if an ACO submits a request to add an ACO participant to its ACO participant List for the 2017 performance year during 2016, the ACO participant agreement must meet the requirements established in this final rule. Similarly, because of the operational complexity of the SNF 3-day rule waiver, we will defer implementation of that policy to no earlier than the 2017 performance year. We intend to develop and update guidance and operational documents as the new policies become effective.

Comment: Several commenters suggested ways for the Shared Savings Program to increase or ensure beneficiary engagement. For example, commenters suggested permitting ACOs to financially reward beneficiaries for choosing low cost options or healthy behaviors, allowing ACOs to remove non-engaged beneficiaries by permitting the ACO to dismiss ''non-compliant'' beneficiaries, allowing ACOs more flexibility to interact with their beneficiary population to generate a more patient-centric program, and excluding certain vulnerable patient populations from ACO costs until ACOs develop a better track record of treating these patients.

Several commenters made comments related to Medicare beneficiaries and their interaction with the ACO. A commenter stated that one of the major challenges for ACOs is ''getting beneficiaries to understand that they are a part of an ACO'' and that they are encouraged to receive all of their health care from ACO participating professionals and suppliers. The commenter suggested that CMS develop educational documents/resources for assigned beneficiaries that clearly outline the advantages and benefits of obtaining health care from their assigned ACO. On the other hand, a few other commenters expressed concerns that the Shared Savings Program regulations do not reinforce the concept that beneficiaries can get care outside the ACO. A few commenters requested that CMS perform various forms of monitoring activities to ensure that ACOs are providing open access to all beneficiaries. Commenters requested that we strictly monitor both referral patterns and any avoidance activities in order that all beneficiaries have access to quality care.

Response: We recognize that beneficiary engagement is an important element in the ACO's ability to meet its goal of improving quality and reducing costs. For this reason, the statute and our program rules require ACOs to develop a process to promote patient engagement. We believe patient engagement works best at the point of care and the development of the patient-doctor relationship. Several ACOs that achieved first year success in the program have observed that patient engagement improves when engaged providers improve patient care. However, we will continue to consider how CMS can best support ACO efforts while ensuring beneficiary and Trust Funds protections.

Additionally, as noted in this section and by some commenters, the Shared Savings Program is not a managed care program. Medicare FFS beneficiaries in the Shared Savings Program retain all rights and benefits under traditional Medicare. Medicare FFS beneficiaries retain the right to see any physician of their choosing, and they do not enroll in the Shared Savings Program. Unlike a managed care program, the assignment of beneficiaries to a Shared Savings Program ACO does not mean that beneficiaries must receive care only from ACO providers/suppliers, nor does it mean that beneficiaries must enroll in the ACO or the Shared Savings Program. Therefore, we develop patient materials with the assistance of the ombudsman's office (for example, the Medicare and You Handbook, required ACO notifications, fact sheets) that state the rights and freedoms of beneficiaries under traditional FFS Medicare. We do not agree that it is appropriate for ACOs or CMS to require beneficiaries to receive all of their care from ACO participating professionals and suppliers. Rather, it is a program requirement that the ACO develop a process to promote care coordination across and among providers and suppliers both inside and outside the ACO.

Finally, although beneficiaries that receive services from ACO professionals continue to retain the freedom to choose their providers, CMS monitors ACOs for prohibited behaviors such as avoidance of at-risk beneficiaries. Several other protections are in place, including a prohibition on beneficiary inducements and on certain required referrals and cost shifting § 425.304. Moreover, providers and suppliers that seek to participate in an ACO undergo screening for program integrity history and may be denied participation in the Shared Savings Program based on the results.

Comment: Many commenters were concerned with what they identified as either a lack of communication from CMS on specific questions or an overall lack of information about the program. Comments requested that CMS provide both general and detailed programmatic information. Others commenters recommended that the best practices that have resulted in shared savings be shared with ACOs and that CMS provide a detailed account of best practices that have been observed by ACOs that generated savings.

Response: We believe that program transparency is important. For this reason, many of the current and newly finalized policies in this rule are designed to promote transparency for

beneficiaries and providers. For example, we have updated our public reporting requirements, codified and updated our requirements for ACO participant agreements, clarified numerous policies, and posted quality and financial information about ACOs on our Web site and Physician Compare (*http://www.medicare.gov/physiciancompare/aco/search.html*). There are many other methods we use to answer questions and assist ACOs participating in the program, including the following:

- Each ACO has a designated CMS Coordinator that develops an ongoing relationship with the ACO and is a direct resource to help ACOs navigate program requirements and deadlines.
- Operational guidance documents and FAQs that are available to ACOs on the ACO portal.
- Weekly newsletters with important information including deadline reminders.
- A dedicated CMS Web page (*https://www.cms.gov/sharedsavingsprogram/*) with program information, timelines, FAQs.
- A dedicated email box for ACOs to submit questions for subject matter experts to address.
- Frequent webinars that provide detailed information on program operations and methodologies, the opportunity to speak with CMS staff, and peer-to-peer learning sessions. We recognize that in spite of these efforts, there may be additional opportunities to improve program transparency. Therefore, we thank the commenters for their suggestions and will continue to look for ways we can engage with ACOs.

We also note that we invite all ACOs to participate in learning best practices through ACO Learning System activities. The ACO Learning System was developed to provide ACOs with peer-to-peer learning opportunities that are in the form of in-person learning sessions and regularly scheduled webinars. This forum provides a unique mechanism for ACOs to share their challenges and successes with other ACOs. Summaries and slides from past sessions are available to participating ACOs through the ACO portal.

A. Definitions

In the November 2011 final rule (76 FR 67802), we adopted definitions of key terms for purposes of the Shared Savings Program at § 425.20. These terms are used throughout this final rule. We encourage readers to review these definitions. Based on our experiences thus far with the Shared Savings Program and inquiries we received regarding the defined terms, we proposed some additions to the definitions and a few revisions to the existing definitions.

1. Proposed Definitions

We proposed to add several new terms to the definitions in § 425.20. First, we proposed to add a definition of ''participation agreement.'' Specifically, we proposed to define the term to mean the written agreement required under § 425.208(a) between the ACO and CMS that, along with the regulations at part 425, governs the ACO's participation in the Shared Savings Program. We further proposed to make conforming changes throughout part 425, replacing references to an ACO's agreement with CMS with the defined term ''participation agreement.'' In addition, we proposed to make a conforming change in § 425.204(c)(1)(i) to remove the incorrect reference to ''participation agreements'' and replace it with ''ACO participant agreements.''

We proposed to add the related definition of ''ACO participant agreement.'' Specifically, we proposed to define ''ACO participant agreement'' to mean the written agreement between an ACO and an ACO participant required at § 425.116 in which the ACO participant agrees to participate in, and comply with, the requirements of the Shared Savings Program.

As discussed in section II.F. of the proposed rule, we proposed to add a definition for ''assignment window,'' to mean the 12-month period used to assign beneficiaries to an ACO. This definition was added to accommodate the 12 month period used to assign beneficiaries to Track 1 and 2 ACOs based on a calendar year as well as the off-set 12 month period used to assign beneficiaries prospectively to an ACO in Track 3.

Comment: Many commenters were supportive of the addition of definitions for ''participation agreement'' and ''ACO participant agreement.'' Several commenters explicitly stated support for the proposal to define an ''assignment window''.

Response: We appreciate stakeholder support for incorporating new definitions in to the Shared Savings Program.

FINAL ACTION: We are finalizing the new definitions of ''participation agreement'', ''ACO participant agreement'', and ''assignment window'' as proposed in § 425.20. We believe these definitions will facilitate transparency and a better understanding of the program rules.

2. Proposed Revisions to Existing Definitions

We proposed several revisions to existing definitions. First, we proposed to revise the definition of ''ACO participant'' to clarify that an ACO participant is an ''entity'' identified by a Medicare-enrolled TIN. Additionally, we proposed to correct a grammatical error by revising the definition to indicate that one or more ACO participants ''compose,'' rather than ''comprise'' an ACO. We noted that a related grammatical error would be corrected at § 425.204(c)(1)(iv). These proposed changes to the definition of ''ACO participant'' were not intended to alter the way the Shared Savings Program currently operates.

We proposed to revise the definition of ''ACO professional'' to remove the requirement that an ACO professional be an ACO provider/supplier. We also proposed to revise the definition of ''ACO professional'' to indicate that an ACO professional is an individual who bills for items or services he or she furnishes to Medicare fee-for-service beneficiaries under a Medicare billing number assigned to the TIN of an ACO participant in accordance with Medicare regulations. We proposed these modifications because there may be ACO professionals who furnished services billed through an ACO participant's TIN in the benchmarking years but are no longer affiliated with the ACO participant and therefore are not furnishing services billed through the TIN of the ACO participant during the performance years. These proposed changes to the definition of ''ACO professional'' are not intended to alter the way the Shared Savings Program currently operates.

We proposed to modify the definition of ''ACO provider/supplier'' to clarify that an individual or entity is an ACO provider/supplier only when it is enrolled in the Medicare program, bills for items and services furnished to Medicare FFS beneficiaries during the agreement period under a Medicare billing number assigned to the TIN of an ACO participant, and is included on the list of ACO providers/suppliers that is required under the proposed regulation at § 425.118. We stated our belief that an individual or entity should be considered an ACO provider/supplier if he or she previously (for example, during the benchmarking years) reassigned the right to receive Medicare payment to a prospective ACO participant, but is not participating in the activities of the ACO during the ACO's agreement period by furnishing care to Medicare FFS beneficiaries that

is billed through the TIN of an ACO participant. The proposed modification was intended to clarify that a provider or supplier must bill for items or services furnished to Medicare FFS beneficiaries through the TIN of an ACO participant during the ACO's agreement period in order to be an ACO provider/supplier.

We proposed to modify the definition of ''assignment'' to mean the operational process by which CMS determines whether a beneficiary has chosen to receive a sufficient level of the requisite primary care services from ''ACO professionals.'' In the proposed rule, we explained that that for purposes of defining assignment, we stated our belief that it is more appropriate to use the term ''ACO professional,'' rather than the term ''ACO provider/supplier,'' because a physician or other practitioner can only be an ACO provider/supplier if he or she bills for items and services through the TIN of an ACO participant during the ACO's agreement period and is included on the list of ACO providers/suppliers required under our regulations. However, there may be an ACO professional who furnishes services billed through an ACO participant's TIN in the performance or benchmarking years but is either not listed on the ACO providers/suppliers list or is no longer billing through the ACO participant's TIN during the performance years and therefore cannot be considered an ACO provider/supplier.

In the interests of clarity, we therefore proposed to modify the definition of assignment to reflect that our assignment methodology takes into account claims for primary care services furnished by ACO professionals, not solely claims for primary care services furnished by physicians in the ACO. This revision would ensure consistency with program operations and alignment with the definition of ''ACO professional'' since it is the aggregation of the ACO professionals' claims that impacts assignment. We stated that the proposed modification to the definition of ''assignment'' would more accurately reflect the use of claims for primary care services furnished by ACO professionals that are submitted through an ACO participant's TIN in determining beneficiary assignment in the ACO's benchmark and performance years. Additionally, we proposed to make conforming changes as necessary to the regulations governing the assignment methodology in part 425 subpart E, to revise the references to ''ACO provider/supplier'' to read ''ACO professional.''

We proposed a technical revision to the definition of ''hospital'' for purposes of the Shared Savings Program. Section 1899(h)(2) of the Act provides that, for purposes of the Shared Savings Program, the term ''hospital'' means a subsection (d) hospital as defined in section 1886(d)(1)(B) of the Act. In the November 2011 final rule (76 FR 67812), we finalized a definition of ''hospital'' that included only acute care hospitals paid under the hospital inpatient prospective payment system (IPPS). Under this definition, Maryland acute care hospitals would not be considered to be ''hospitals'' for purposes of the Shared Savings Program because they are subject to a waiver from the Medicare payment methodologies under which they would otherwise be paid. We proposed to clarify that a Maryland acute care hospital is a ''hospital'' for purposes of the Shared Savings Program. Specifically, we proposed to revise the definition of ''hospital'' for purposes of the Shared Savings Program to mean a hospital as defined in section 1886(d)(1)(B) of the Act. The proposed regulation is consistent with both the statutory definition of ''hospital'' for purposes of the Shared Savings Program in section 1899(h)(2) of the Act and the position we have taken in other contexts in referring to subsection (d) hospitals.

We proposed to modify the definition of ''primary care services.'' We refer the reader to section II.E.3. of this final rule for a more detailed discussion of the proposed revision to this definition, which is relevant to the assignment of a Medicare beneficiary to an ACO, as well as responses to comments received on this proposal.

As discussed in greater detail in section II.F. of the proposed rule, we proposed revisions to the definitions of ''continuously assigned beneficiary'' and ''newly assigned beneficiary.'' These definitions relate to risk adjustment for the assigned population and required minor modification to accommodate the newly proposed Track 3. Specifically, we proposed to replace the reference in these definitions to ''most recent prior calendar year'' with a reference to ''the assignment window for the most recent prior benchmark or performance year.'' Thus, for Track 3 the reference period for determining whether a beneficiary is newly or continuously assigned would be the most recent prior prospective assignment window (the off-set 12 months) before the assignment window for the current performance year and the reference period for determining whether a Track 1 or 2 beneficiary is newly or continuously assigned would continue to be the most recent prior assignment window (the most recent calendar year).

Finally, in connection with our discussion of the applicability of certain changes that are made to program requirements during the agreement period, we proposed revisions to the definition of ''agreement period.'' Readers should refer to section II.C.4. of this final rule for a discussion of the proposed changes to the definition as well as the responses to comments received on the proposal.

Comment: Many commenters expressed general support for modifications to the definitions. Several commenters expressed support for our proposed revision to the definition of ''ACO participant'' but suggested that CMS clarify that some ACO participants could be individual providers billing under his or her own Social Security Number, rather than the TIN of an ACO participant. A few commenters expressed support for our proposal to modify the definition of ''hospital,'' stating that this modification will result in clarity for Maryland acute care facility participation in the Shared Savings Program and provide an equal opportunity for all hospitals to form ACOs. A commenter expressed concern that the definitions of ''ACO professional, ACO participant and ACO provider/supplier'' would ''restructure the intended roles of providers within ACOs'' and encouraged CMS to develop definitions that would be inclusive rather than exclusive to ''protect the inclusive intent of the legislation which recognizes NPs as ACO professionals.''

Response: We appreciate the comments we received in favor of our proposals to modify certain definitions. We believe these modifications will improve program transparency and understanding of program rules and respond to stakeholder inquiries. We believe the definitions support and lend transparency to the program rules, are consistent with statutory language, and inclusive of Medicare enrolled providers and suppliers that furnish services to Medicare FFS beneficiaries. We are unclear what the commenter is referring to regarding the ''inclusive intent'' of the statute and believe we have developed definitions that are consistent with the statutory language. Our definition of an ACO participant includes Medicare enrolled billing TINs through which one or more ACO providers/suppliers bill Medicare. As such, ACOs may include the TIN of solo practitioners on its list of ACO participants because Social Security Numbers (SSNs) and Employer Identification Numbers (EINs) are types of Taxpayer Identification Numbers. Furthermore, we agree with commenters that aligning the program definition of

hospital with the statutory definition will permit Maryland hospitals to form an ACO under our program rules, although we note that current program rules permit such hospitals to be an ACO participant along with other ACO participants that have joined to form an ACO.

FINAL ACTION: We are finalizing the proposed modifications to the definitions of ACO participant, ACO professional, ACO provider/supplier, assignment, hospital, and newly assigned beneficiary and continuously assigned beneficiary, along with necessary conforming changes. We refer the reader to sections II.C. and II.E. of this final rule for a review of comments, responses, and final actions regarding the definitions of ''agreement period'' and ''primary care services.''

B. ACO Eligibility Requirements

1. Agreement Requirements

a. Overview

Section 1899(b)(2)(B) of the Act requires participating ACOs to ''enter into an agreement with the Secretary to participate in the program for not less than a 3-year period.'' If the ACO is approved for participation in the Shared Savings Program, an executive who has the ability to legally bind the ACO must sign and submit a participation agreement to CMS (§ 425.208(a)(1)). Under the participation agreement with CMS, the ACO agrees to comply with the regulations governing the Shared Savings Program (§ 425.208(a)(2)). In addition, the ACO must require its ACO participants, ACO providers/suppliers, and other individuals or entities performing functions or services related to the ACO's activities agree to comply with the Shared Savings Program regulations and all other applicable laws and regulations (§ 425.208(b) and § 425.210(b)) and to commit to the participation agreement (§ 425.306(a)). The ACO must provide a copy of its participation agreement with CMS to all ACO participants, ACO providers/suppliers, and other individuals and entities involved in ACO governance (§ 425.210(a)). As part of its application, we currently require each ACO to submit a sample of the agreement it executes with each of its ACO participants (the ''ACO participant agreement''). Also, as part of its application and when requesting the addition of new ACO participants, we require an ACO to submit evidence that it has a signed written agreement with each of its ACO participants. (See guidance on our Web site at *http://www.cms.gov/Medicare/Medicare-Fee-for-Service-Payment/sharedsavingsprogram/Downloads/Memo_Additional_Guidance_on_ACO_Participants.pdf*). An ACO's application to participate in the Shared Savings Program and any subsequent request to add new ACO participants will not be approved if the ACO does not have an agreement in place with each of its ACO participants in which each ACO participant agrees to participate in the Shared Savings Program and to comply with the requirements of the Shared Savings Program.

In our review of applications to participate in the Shared Savings Program, we received many ACO participant agreements that were not properly executed, were not between the correct parties, lacked the required provisions, contained incorrect information, or failed to comply with § 425.304(c) relating to the prohibition on certain required referrals and cost shifting. When we identified such agreements, ACOs experienced processing delays, and in some cases, we were unable to approve the ACO applicant and its ACO participant or both to participate in the Shared Savings Program. Consequently, we issued guidance for ACO applicants in which we stated the required elements for ACO participant agreements and strongly recommended that ACOs employ good contracting practices to ensure that each of their ACO participant agreements met our requirements (see *http://www.cms.gov/Medicare/Medicare-Fee-for-Service-Payment/sharedsavingsprogram/Downloads/Tips-ACO-Developing-Participant-Agreements.pdf*).

The ACO participant agreements are necessary for purposes of program transparency and to ensure an ACO's compliance with program requirements. Moreover, many important program operations (including calculation of shared savings, assignment of beneficiaries, and financial benchmarking) use claims and other information that are submitted to CMS by the ACO participant. Our guidance clarifies that ACO participant agreements and any agreements with ACO providers/suppliers must contain the following:

- An explicit requirement that the ACO participant or the ACO provider/supplier will comply with the requirements and conditions of the Shared Savings Program (part 425), including, but not limited to, those specified in the participation agreement with CMS.
- A description of the ACO participants' and ACO providers'/suppliers' rights and obligations in and representation by the ACO.
- A description of how the opportunity to get shared savings or other financial arrangements will encourage ACO participants and ACO providers/suppliers to follow the quality assurance and improvement program and evidence-based clinical guidelines.
- Remedial measures that will apply to ACO participants and ACO providers/suppliers who do not comply with the requirements of their agreements with the ACO.

Our guidance also requires that the ACO participant agreements be made directly between the ACO and the ACO participant. We believe it is important that the parties entering into the agreement have a direct legal relationship to ensure that the requirements of the agreement are fully and directly enforceable by the ACO, including the ability of the ACO to terminate an agreement with an ACO participant that is not complying with the requirements of the Shared Savings Program. Therefore, we believe a direct contractual relationship is important. Additionally, a direct contractual relationship ensures that the ACO participant may, if necessary, terminate the agreement with the ACO according to the terms of the agreement without interrupting other contracts or agreements with third parties. Therefore, the ACO and the ACO participant must be the only parties to an ACO participant agreement; the agreements may not include a third party to the agreement. For example, the agreement may not be between the ACO and another entity, such as an independent practice association (IPA) or management company that in turn has an agreement with one or more ACO participants. Similarly, ACOs should not use existing contracts between ACOs and ACO participants that include third parties.

We recognize that contractual agreements do exist between entities (for example, contracts that permit organizations like IPAs to negotiate contracts with health care payers on behalf of individual practitioners). However, because it is important to ensure that there is a direct contractual relationship between the ACO and the ACO participant evidenced by a written agreement, and because ACO participants continue to bill and receive payments as usual under the Medicare FFS rules (that is, there is no negotiation for payment under the program) we believe that typical IPA contracts are inappropriate and unnecessary for purposes of participation in the Shared Savings Program. An ACO and ACO participant may use a contract unrelated to the Shared Savings Program as an

ACO participant agreement only when it is between the two parties and is amended to satisfy the requirements for ACO participant agreements under the Shared Savings Program.

It is the ACO's responsibility to make sure that each ACO participant agreement identifies the parties entering into the agreement using their correct legal names, specifies the term of the agreement, and is signed by both parties to the agreement. We validate the legal names of the parties based on information the ACO submitted in its application and the legal name of the entity associated with the ACO participant's TIN in the Provider Enrollment Chain & Ownership System (PECOS). We reject an ACO participant agreement if the party names do not match our records. It may be necessary for the ACO to execute a new or amended ACO participant agreement.

Although the ACO participant must ensure that each of its ACO providers/suppliers (as identified by a National Provider Identifier (NPI)) has agreed to participate in the ACO and will comply with program rules, the ACO has the ultimate responsibility for ensuring that all the ACO providers/suppliers that bill through the TIN of the ACO participant have also agreed to participate in the Shared Savings Program and comply with our program regulations. The ACO may ensure this by directly contracting with each ACO provider/supplier (NPI) or by contractually requiring the ACO participant to ensure that all ACO providers/suppliers that bill through its TIN have agreed to participate in, and comply with the requirements of, the Shared Saving Program. If the ACO chooses to contract directly with the ACO providers/suppliers, the agreements must meet the same requirements as the agreements with ACO participants. We emphasize that even if an ACO chooses to contract directly with the ACO providers/suppliers (NPIs), it must still have the required ACO participant agreement. In other words, the ACO must be able to produce valid written agreements for each ACO participant and each ACO provider/supplier. Furthermore, since we use TINs (and not merely some of the NPIs that make up the entity identified by a TIN) as the basis for identifying ACO participants, and we use all claims submitted under an ACO participant's TIN for financial calculations and beneficiary assignment, an ACO may not include an entity as an ACO participant unless all Medicare enrolled providers and suppliers billing under that entity's TIN have agreed to participate in the ACO as ACO providers/suppliers.

We proposed to codify much of our guidance regarding the content of the ACO participant and ACO provider/supplier agreements.

b. Proposed Revisions

First, we proposed to add new § 425.116 to set forth the requirements for agreements between an ACO and an ACO participant or ACO provider/supplier. We stated our belief that the new provision would promote a better general understanding of the Shared Savings Program and transparency for ACO participants and ACO providers/suppliers. It was our intent to provide requirements that would facilitate and enhance the relationships between ACOs and ACO participants, and reduce uncertainties and misunderstandings leading to rejection of ACO participant agreements during application review. Specifically, we proposed to require that ACO participant agreements satisfy the following criteria:

- The ACO and the ACO participant are the only parties to the agreement.
- The agreement must be signed on behalf of the ACO and the ACO participant by individuals who are authorized to bind the ACO and the ACO participant, respectively.
- The agreement must expressly require the ACO participant to agree, and to ensure that each ACO provider/supplier billing through the TIN of the ACO participant agrees, to participate in the Shared Savings Program and to comply with the requirements of the Shared Savings Program and all other applicable laws and regulations (including, but not limited to, those specified at § 425.208(b)).
- The agreement must set forth the ACO participant's rights and obligations in, and representation by, the ACO, including without limitation, the quality reporting requirements set forth in Subpart F, the beneficiary notification requirements set forth at § 425.312, and how participation in the Shared Savings Program affects the ability of the ACO participant and its ACO providers/suppliers to participate in other Medicare demonstration projects or programs that involve shared savings.
- The agreement must describe how the opportunity to receive shared savings or other financial arrangements will encourage the ACO participant to adhere to the quality assurance and improvement program and evidence-based medicine guidelines established by the ACO.
- The agreement must require the ACO participant to update enrollment information with its Medicare Administrative Contractor using the PECOS, including the addition and deletion of ACO professionals billing through the TIN of the ACO participant, on a timely basis in accordance with Medicare program requirements. The agreement must also require ACO participants to notify the ACO within 30 days after any addition or deletion of an ACO provider/supplier.
- The agreement must permit the ACO to take remedial action against the ACO participant, and must require the ACO participant to take remedial action against its ACO providers/suppliers, including imposition of a corrective action plan, denial of shared savings payments (that is, the ability of the ACO participant or ACO provider/supplier to receive a distribution of the ACO's shared savings) and termination of the ACO participant agreement, to address non-compliance with the requirements of the Shared Savings Program and other program integrity issues, including those identified by CMS.
- The term of the agreement must be for at least 1 performance year and must articulate potential consequences for early termination from the ACO.
- The agreement must require completion of a close-out process upon the termination or expiration of the ACO's participation agreement that requires the ACO participant to furnish data necessary to complete the annual assessment of the ACO's quality of care and addresses other relevant matters.

Although we proposed that the term of an ACO participant agreement be for at least 1 performance year, we stated that we did not intend to prohibit early termination of the agreement. We recognized that there may be legitimate reasons to terminate an ACO participant agreement. However, because care coordination and quality improvement requires commitment from ACO participants, we stated our belief that a minimum requirement of 1 year would improve the likelihood of success in the Shared Savings Program. We also stated that we were considering whether and how ACO participant agreements should encourage participation to continue for subsequent performance years. We sought comment on this issue.

In the case of an ACO that chooses to contract directly with its ACO providers/suppliers, we proposed virtually identical requirements for its agreements with ACO providers/suppliers. We noted that, unlike agreements between the ACO and an ACO participant, agreements with ACO providers/suppliers would not be required to be for a term of at least 1 year, because we did not want to impede individual practitioners from activities such as retirement, reassignment of billing rights, or

changing employers. In the case of ACO providers/suppliers that do not contract directly with the ACO, we considered requiring each ACO to ensure that its ACO participants contract with or otherwise arrange for the services of its ACO providers/suppliers on the same or similar terms as those required for contracts made directly between the ACO and ACO providers/suppliers.

In addition, we proposed to add at § 425.204(c)(6) a requirement that, as part of the application process and upon request thereafter, the ACO must submit documents demonstrating that its ACO participants, ACO providers/suppliers, and other individuals or entities performing functions or services related to ACO activities are required to comply with the requirements of the Shared Savings Program. In the case of ACO participants, we proposed that the evidence to be submitted must, consistent with our past guidance, include sample form agreements together with the first and last (signature) page of each form agreement that has been fully executed by the parties to the agreement. However, we proposed to reserve the right to request all pages of an executed ACO participant agreement to confirm that it conforms to the sample form agreement submitted by the ACO. In addition, we proposed at § 425.116(c) that executed ACO participant agreements would also be submitted when an ACO seeks approval to add new ACO participants. The agreements would be submitted in the same form and manner as set forth in § 425.204(c)(6). Finally, although we would not routinely request an ACO to submit copies of executed agreements the ACO or ACO participants have with the ACO providers/suppliers or other individuals or entities performing functions or services related to ACO activities as part of the ACO's application or continued participation in each performance year, we proposed to reserve our right to request this information during the application or renewal process and at any other time for audit or monitoring purposes in accordance with § 425.314 and § 425.316.

We stated our belief that the proposed requirements regarding agreements between ACOs and ACO participants, together with our earlier guidance regarding good contracting practices, would enhance transparency between the ACO, ACO participants, and ACO professionals, reduce turnover among ACO participants, prevent misunderstandings related to participation in the Shared Savings Program, and assist prospective ACOs in submitting complete applications and requests for adding ACO participants. We stated our belief that codifying these requirements would assist the ACO, ACO participants, and ACO providers/suppliers in better understanding the program and their rights and responsibilities while participating in the program. We solicited comment on the proposed requirements and on whether we should consider additional elements to include in the agreements the ACO has with its ACO participants and ACO providers/suppliers.

Comment: Most commenters agreed with the CMS proposed criteria for ACO participant agreements stating that it is important for each ACO participant to understand its obligations and rights. Additionally, commenters stated that it is ''crucial'' for all practitioners participating in the ACO to agree to both program participation and compliance with all relevant laws and regulations, and that transparency in the opportunity to receive shared savings is essential for expectations. Some commenters agreed with our proposal for ACO participant agreements to require that ACO participants update enrollment information with their Medicare Administrative Contractor using PECOS within 30 days of any addition/deletion of an ACO provider/supplier. However, several commenters expressed concerns with the general requirement discussed later in this section that ACOs be held responsible for ensuring that ACO participants and ACO providers/suppliers appropriately update PECOS.

Response: We appreciate the general support for our proposals related to ACO participant agreements. We agree with commenters that transparency between ACOs and ACO participants is important. We agree with commenters that it is important for all practitioners participating in the ACO to explicitly agree to both participation and compliance with all relevant laws and regulations. We believe it is important for ACOs to encourage and enforce compliance with all Medicare laws and regulations, including the requirement that Medicare enrolled entities keep Medicare enrollment records updated. Since Medicare already requires enrollment information to be updated within 30 days of a change, we do not believe the 30 day requirement for Medicare enrolled entities to alert PECOS of any additions/deletions is overly burdensome. Moreover, including this requirement in the ACO participant agreement will assist the ACO in reinforcing this requirement as a condition of participation in the ACO and enable the ACO to comply with program rules.

Comment: A commenter stated CMS to include a requirement for ACO participant agreements to specify that a portion of shared savings be shared with ACO providers/suppliers, especially specialists.

Response: We believe maintaining transparency regarding the opportunity to receive shared savings is essential in order to set appropriate expectations for all parties. For this reason, we strongly urge ACOs to be transparent in the agreements that are developed for ACO participants, for example, by clearly articulating expectations for how shared savings will be distributed to ACO participants and ACO providers/suppliers. However, we do not require ACOs to distribute shared savings in a particular manner. We believe it is important to permit ACOs the flexibility to use and distribute shared savings, as long as the methodology complies with applicable law. As explained in the November 2011 final rule, we do not believe we have the legal authority to dictate how shared savings are distributed; however, we believe it is consistent with the purpose and intent of the statute to require the ACO to indicate how it plans to use potential shared savings to meet the goals of the program. We encourage ACOs to be transparent about this plan in its agreements with ACO participants.

Comment: A commenter stated that forcing an entity to remain in an ACO for the duration of the performance year would compromise the goals of the ACO and contribute to administrative burden. Another commenter suggested that CMS finalize an additional requirement for ACO participants to notify the ACO if they wish to terminate prior to the CMS deadlines for subsequent year changes.

Response: We believe it is important for each ACO participant to understand its obligations and rights in detail. We also note that program rules currently require each ACO participant to commit to the 3-year participation agreement that the ACO makes with CMS (§ 425.306(a)). As we stated in the proposed rule, because care coordination and quality improvement requires commitment from ACO participants, we believe that a minimum 1-year term requirement would improve the likelihood of success of the ACO and its ACO participants. For these reasons, we believe it is important to require ACO participant agreements to include the requirement that the agreement must be for at least 1 performance year and address potential consequences for early termination. Rather than compromising the goals of the ACO, we believe this enhances the ACO's ability to achieve its goals. We

may consider in future rulemaking the suggestion to require ACO participants and ACO providers/suppliers to provide some prior notice of termination to the ACO. However, even in the absence of such a requirement, we believe that ACOs will, as a matter of prudent business contracting, incorporate a requirement that ACO participants and ACO providers/suppliers must provide some prior notice of termination to the ACO.

Comment: A commenter requested that CMS more thoroughly consider the required close-out procedures so ACOs could incorporate specific details into the ACO participant agreements.

Response: We will not prescribe additional close-out requirements at this time. However, ACOs may choose to incorporate additional requirements into their ACO participant agreements regarding timing of agreement termination. Additionally, we are pleased that ACOs wish to incorporate additional details related to close-out procedures and intend to make details available through guidance and other operational documents. We encourage, but will not require, ACOs to incorporate these details into their ACO participant agreements once the guidance becomes available.

Comment: A commenter requested that CMS not incorporate proposed language regarding ''other individuals or entities performing functions or services related to ACO activities are required to comply with the requirements of the Shared Savings Program'' into program rules at § 425.204(c)(6) because they believe it would add unnecessary burden.

Response: Under § 425.210(b) of the Shared Savings Program rules, we currently require that contracts or arrangements between or among the ACO, ACO participants, ACO providers/suppliers, and other individuals or entities performing functions or services related to ACO activities must require compliance with the requirements and conditions of the Shared Savings Program. This is not a new proposal; however, we have proposed to incorporate this requirement in § 425.204(c)(6). Because this is not a new requirement, and we do not anticipate routinely requesting executed documents, we do not believe it imposes any additional burden on ACOs.

Comment: Some commenters expressed concern that our proposals for ACO participant agreement requirements may lead some readers to conclude that CMS is prohibiting ACO participants from participating in an IPA and in an ACO concurrently. Others requested reconsideration of the proposed ACO participant agreement requirements and instead permit 'typical contracts' between providers and IPAs to qualify. These commenters stated that the proposed regulation would erect a barrier for ACO participation by independent practices that would have to spend time and money reviewing new contracts when they may already have a contract in place that binds them to ''all the terms necessary'' for ACO participation.

Response: Our example of the requirement for ACOs to have a direct contractual relationship with ACO participants was not intended to suggest that ACO participants may not also have contractual relationships with other entities such as IPAs. We also emphasize that existing IPA contracts we have seen during the application process are insufficient to satisfy the requirements necessary for an ACO participant agreement. For example, typical existing contracts permit IPAs to negotiate with payers on behalf of the independent practice, make no mention of the Shared Savings Program, and do not require independent practices or their practitioners to agree to participate and comply with program rules. Under the Shared Savings Program, payments for services rendered by the independent practices for FFS beneficiaries are not negotiated because such practices continue to bill Medicare for the services the furnish to FFS beneficiaries as they normally would in the absence of the ACO. Additionally, based on previous experience, we believe it is extremely important that each ACO participant and each ACO provider/supplier explicitly understand and acknowledge their participation in the program, how their participation may result in shared savings, their obligations regarding quality reporting, their obligation to comply with all program rules, and other important details of the program. Based on our experience, if ACO participants who are also part of an IPA wish to form an ACO, it is likely that they will have to develop an ACO participant agreement that satisfies the requirements of the Shared Savings Program, and not rely on agreements that have already been executed between the IPA and Medicare-enrolled providers or suppliers for purposes of participating in the IPA.

FINAL ACTION: We will finalize our proposals at § 425.116 for ACO participant and ACO provider/supplier agreement criteria with slight modifications regarding the applicability date. We believe the new regulation will promote a better general understanding of the Shared Savings Program and transparency for ACO participants and ACO providers/suppliers. We believe that the new requirements regarding agreements between ACOs and ACO participants, together with our earlier guidance regarding good contracting practices, will enhance transparency between the ACO, ACO participants, and ACO professionals, reduce turnover among ACO participants, prevent misunderstandings related to participation in the Shared Savings Program, and assist prospective ACOs in submitting complete applications and requests for adding ACO participants. We believe that codifying these requirements will assist the ACO, ACO participants, and ACO providers/suppliers in better understanding the program and their rights and responsibilities while participating in the program.

In addition, we will finalize our proposal to add at § 425.204(c)(6) a requirement that, as part of the application process and upon request thereafter, the ACO must submit documents demonstrating that its ACO participants, ACO providers/suppliers, and other individuals or entities performing functions or services related to ACO activities are required to comply with the requirements of the Shared Savings Program, including executed agreements for all ACO participants. Although we will not routinely request an ACO to submit copies of executed agreements the ACO or its ACO participants have with ACO providers/suppliers or other individuals or entities performing functions or services related to ACO activities as part of the ACO's application or continued participation in each performance year, we reserve our right to request this information during the application or renewal process and at any other time for audit or monitoring purposes in accordance with §§ 425.314 and 425.316. Specifically, The ACO is ultimately responsible for ensuring that each ACO provider/supplier billing through the TIN of an ACO participant has agreed to participate in and comply with the Shared Savings Program rules. The ACO can fulfill this obligation either by direction contracting with each ACO provider/supplier (NPI) or contractually requiring the ACO participant to ensure that all ACO providers/suppliers that bill through its TIN have agreed to participate in, and comply with the requirements of, the Shared Saving Program. If the ACO chooses to contract directly with the ACO providers/suppliers, the agreements must meet

virtually the same requirements as the agreements with ACO participants, and the ACO must still have an ACO participant agreement in place with the TIN through which the ACO providers/suppliers bill.

Because of the timing of publication of this final rule, we recognize that ACOs may struggle to incorporate these requirements in time to submit 2016 applications or requests for renewal by the applicable deadlines which will occur during the summer and fall of 2015. While we encourage ACOs to incorporate these requirements into their ACO participant agreements as soon as possible, we will not require these changes to be incorporated into any ACO participant agreements that are submitted to CMS for the 2016 performance year. ACOs that submit requests to add ACO participants for inclusion on the 2017 performance year list of ACO participants will be required to have a corresponding ACO participant agreement that meets the new requirements.

2. Sufficient Number of Primary Care Providers and Beneficiaries

a. Overview

Section 1899(b)(2)(D) of the Act requires participating ACOs to ''include primary care ACO professionals that are sufficient for the number of Medicare fee-for-service beneficiaries assigned to the ACO . . .'' and that at a minimum, ''the ACO must have at least 5,000 such beneficiaries assigned to it. . . .'' Under § 425.110(a)(2), an ACO is deemed to have initially satisfied the requirement to have at least 5,000 assigned beneficiaries if the number of Medicare beneficiaries historically assigned to the ACO participants in each of the 3 years before the start of the agreement period is 5,000 or more.

Under the beneficiary assignment methodology set forth in the regulations at part 425, subpart E, the assignment of beneficiaries to a particular ACO for a calendar year is dependent upon a number of factors, including where the beneficiary elected to receive primary care services and whether the beneficiary received primary care services from ACO professionals participating in one or more Shared Savings Program ACOs. We note that to ensure no duplication in shared savings payments for care provided to the same beneficiaries, assignment of a beneficiary may also be dependent on whether the beneficiary has been assigned to another initiative involving shared savings, such as the Pioneer ACO Model (§ 425.114(c)). While a final assignment determination can be made for the first 2 benchmark years (BY1 and BY2, respectively) for an ACO applying to participate in the Shared Savings Program, it is not possible to determine the final assignment for the third benchmark year (BY3) (that is, the calendar year immediately prior to the start of the agreement period) because application review and determination of whether the ACO has met the required 5,000 assignment must take place during BY3 before all claims are submitted for the calendar year. Furthermore, there is a lag period after the end of a calendar year during which additional claims for the year are billed and processed. Therefore, the final historical benchmark for the 3-year period and the preliminary prospective assignment for PY1 must be determined after the ACO's agreement period has already started. We note that we currently estimate the number of historically assigned beneficiaries for the third benchmark year for Tracks 1 and 2 by using claims with dates of service for the last 3 months of benchmark year 2 (October through December) and the first 9 months of benchmark year 3 (January through September, with up to 3 months claims run out, as available). We use this approach to calculate the number of assigned beneficiaries for BY3 in order to be as consistent as possible with the timeframes (that is, 12 month period) and claims run out used for the BY1 and BY2 calculations.

Section 425.110(b) provides that an ACO that falls below 5,000 assigned beneficiaries at any time during the agreement period will be allowed to continue in the program, but CMS must issue a warning letter and place the ACO on a corrective action plan (CAP). The purpose of this provision is to ensure that the ACO is aware that its number of assigned beneficiaries is below 5,000, is notified of the consequences of remaining under 5,000, and that the ACO is taking appropriate steps to correct the deficiency.

Section 425.110(b)(1) provides that, while under the CAP, the ACO will remain eligible to share in savings for the performance year in which it fell below the 5,000, and the MSR will be adjusted according to the number of assigned beneficiaries determined at the time of reconciliation. For example, according to Table 6 in the November 2011 final rule (42 FR 67928), a Track 1 ACO with an assigned population of 5,000 would have an MSR of 3.9. If the ACO's number of assigned beneficiaries falls below 5,000, we would work with the CMS Office of the Actuary to determine the MSR for the number of beneficiaries below 5,000, set at the same 90 percent confidence interval that is used to determine an ACO's MSR when the ACO has a smaller assigned beneficiary population. If the number of beneficiaries assigned to the ACO remains less than 5,000 by the end of the next performance year, the ACO is terminated and is not be permitted to share in savings for that performance year (§ 425.110(b)(2)).

b. Proposed Revisions

We proposed to revise § 425.110(a)(2) to clarify the data used during the application review process to estimate the number of beneficiaries historically assigned in each of the 3 years of the benchmarking period. Specifically, we proposed that the number of assigned beneficiaries would be calculated for each benchmark year using the assignment methodology set forth in part 425 subpart E, and in the case of BY3, we would use the most recent data available with up to a 3-month claims run out to estimate the number of assigned beneficiaries. This proposed revision would reflect current operational processes under which we assign beneficiaries to ACOs using complete claims data for BY1 and BY2 but must rely on incomplete claims data for BY3. We would continue to estimate the number of historically assigned beneficiaries for the third benchmark year by using claims with dates of service for the last 3 months of BY2 and the first 9 months of BY3, with up to 3 months claims run out. However, that could vary from year to year depending on data availability during the application review process. As discussed previously, we stated our belief that using this approach to calculate the number of assigned beneficiaries for BY3 would be consistent with the timeframes and claims run out used for BY1 and BY2 calculations because we would be using a full 12 months of claims, rather than only the available claims for the calendar year, which would be less than 12 months.

The estimates of the number of assigned beneficiaries would be used during the ACO application review process to determine whether the ACO exceeds the 5,000-assigned beneficiary threshold for each year of the historical benchmark period. We stated that if based upon these estimates, we determined that an ACO had at least 5,000 assigned beneficiaries in each of the benchmark years, it would be deemed to have initially satisfied the eligibility requirement that the ACO have at least 5,000 assigned beneficiaries. The specific data to be used for computing these initial

estimates during the ACO application review process would be designated through program instructions and guidance. Although unlikely, it is possible that when final benchmark year assignment numbers are generated after the ACO has been accepted into the program, the number of assigned beneficiaries could be below 5,000. In this event, we stated that the ACO would be allowed to continue in the program, but may be subject to the actions set forth in § 425.110(b).

Given our experience with the program and the timing of performance year determinations regarding beneficiary assignment provided during reconciliation, we wish to modify our rules to provide greater flexibility to address situations in which an ACO's assigned beneficiary population falls below 5,000 assigned beneficiaries. Specifically, we stated we had concerns that in some cases it may be very difficult for an ACO to increase its number of assigned beneficiaries by the end of the next performance year, as currently required by § 425.110(b)(2). We noted that increasing the number of assigned beneficiaries involves adding new ACO participants and ACO providers/suppliers or both. However, in certain circumstances, by the time the ACO had been notified that its assigned beneficiary population had fallen below 5,000 beneficiaries, it would have been too late for the ACO to add new ACO participants for PY2, leaving the ACO with more limited options for timely correction of the deficit. We stated our belief that § 425.110(b) should be modified to provide ACOs with adequate time to successfully complete a CAP. Therefore, we proposed to revise § 425.110(b)(2) to state that CMS will specify in its request for a CAP the performance year during which the ACO's assigned population must meet or exceed 5,000 beneficiaries. This modification would permit some flexibility for ACOs whose assigned populations fall below 5,000 late in a performance year to take appropriate actions to address the deficit.

Additionally, we stated that we did not believe it would be necessary to request a CAP from every ACO whose assigned beneficiary population falls below 5,000. For example, we stated our belief that we should have the discretion not to impose a CAP when the ACO has already submitted a request to add ACO participants effective at the beginning of the next performance year and CMS has a reasonable expectation that the addition of these new ACO participants would increase the assigned beneficiary population above the 5,000 minimum beneficiary thresholds. Therefore, we proposed to revise § 425.110(b) to indicate that we have the discretion whether to impose any remedial measures or to terminate an ACO for failure to satisfy the minimum assigned beneficiary threshold. Specifically, we proposed to revise § 425.110(b) to state that the ACO ''may'' be subject to any of the actions described in § 425.216 (actions prior to termination, including a warning letter or request for CAP) and § 425.218 (termination). However, we noted that although we proposed to retain discretion as to whether to impose remedial measures or terminate an ACO whose assigned beneficiary population falls below 5,000, we recognized that the requirement that an ACO have at least 5,000 assigned beneficiaries is a condition of eligibility to participate in the Shared Savings Program under section 1899(b)(2)(D) of the Act, and would exercise our discretion accordingly and consistently.

Comment: Several commenters commented on our proposal allowing greater flexibility for ACOs who fall below the 5,000 threshold and the CAP. Most commenters supported our proposed modifications, and were supportive of our proposal for CMS to determine the timeframe within which the CAP must be completed when an ACO drops below the 5,000 beneficiary threshold. A commenter supported the proposal but suggested that the calculation of the number of assigned beneficiaries fall ''after reconciliation so prospective new members could see actual results.'' Another commenter supported the proposal for an ACO to avoid a CAP when an ACO has already submitted a request to add ACO participants effective at the beginning of the next performance year and CMS has a reasonable expectation that such addition would increase the assigned beneficiary population above the 5,000 thresholds.

Response: We agree with the comments received in support of a more reasonable timeframe for ACOs to correct a situation whereby the assigned beneficiary population falls below the 5,000 beneficiary threshold. We also agree with the comments received regarding CMS using discretion in issuing a CAP when an ACO has already submitted a request to add ACO participants and CMS has a reasonable expectation that the additional ACO participants will increase the number of beneficiaries above the 5,000 thresholds. We believe that the ACO should be given notification when it falls below 5,000 as soon as possible so that the ACO can take immediate steps to correct the deficit. Therefore, we do not agree that it would be better to wait until after reconciliation to determine the number of beneficiaries assigned to an ACO or to notify an ACO if it fell below the 5,000 threshold.

Comment: A number of commenters suggested that CMS ensure that ACOs include sufficient number or types of providers, such as pediatricians and geriatricians, to care for the number and the needs of children and elderly managed by the ACO.

Response: As stated in the November 2011 final rule, we do not believe we should be prescriptive in setting any requirements for the number, type, and location of the ACO providers/suppliers that are included in the ACO. Unlike managed care models that require beneficiaries to receive care from a network of providers, beneficiaries assigned to an ACO may receive care from providers and suppliers both inside and outside the ACO. Therefore, we believe that ACOs should have the flexibility to create an organization and design their models in a manner they believe will achieve the three-part aim, and we do not believe it would be useful to announce specific requirements regarding the number, type, and location of ACO providers/suppliers that are included in the ACO.

FINAL ACTION: We are finalizing our proposed policies as proposed related to the requirement that the ACO have at least 5,000 assigned beneficiaries.

We received no comments on our proposed revisions to § 425.110(a)(2) that the number of assigned beneficiaries would be calculated for each benchmark year using the assignment methodology set forth in part 425 subpart E, and in the case of BY3, we will use the most recent data available with up to a 3 month claims run out to estimate the number of assigned beneficiaries. We are finalizing these provisions as proposed.

Given our experience with the program and the timing of performance year determinations regarding beneficiary assignment provided during reconciliation, we are modifying our rules to provide greater flexibility to address situations in which an ACO's assigned beneficiary population falls below 5,000 assigned beneficiaries. Therefore, we are finalizing our proposed revision at § 425.110(b)(2) to state that CMS will specify in its request for a CAP the performance year during which the ACO's assigned population must meet or exceed 5,000 beneficiaries.

Additionally, we are also finalizing our proposed revisions to § 425.110(b) which give CMS discretion regarding whether to impose any remedial measures or to terminate an ACO for

failure to satisfy the minimum assigned beneficiary threshold. However, it is important to note that ACOs must have at least 5,000 assigned beneficiaries as a condition of eligibility to participate in the Shared Savings Program under section 1899(b)(2)(D) of the Act. Therefore we will exercise its discretion accordingly and consistently.

3. Identification and Required Reporting of ACO Participants and ACO Providers/Suppliers

a. Overview

For purposes of the Shared Savings Program, an ACO is an entity that is identified by a TIN and composed of one or more Medicare-enrolled TINs associated with ACO participants (see § 425.20). The Medicare-enrolled TINs of ACO participants, in turn, are associated with Medicare enrolled individuals and entities that bill through the TIN of the ACO participant. (For example, in the case of a physician, the physician has reassigned to the TIN of the ACO participant his or her right to receive Medicare payments, and their services to Medicare beneficiaries are billed by the ACO participant under a billing number assigned to the TIN of the ACO participant).

As part of the application process and annually thereafter, the ACO must submit a certified list identifying all of its ACO participants and their Medicare-enrolled TINs (the ''ACO participant list'') (§ 425.204(c)(5)(i)). Additionally, for each ACO participant, the ACO must submit a list identifying all ACO providers/suppliers (including their NPIs or other provider identifiers) that bill Medicare during the agreement period under a billing number assigned to the TIN of an ACO participant (the ''ACO provider/supplier list'') (§ 425.204(c)(5)(i)(A)). Our regulations require the ACO to indicate on the ACO provider/supplier list whether an individual is a primary care physician as defined at § 425.20. All Medicare enrolled individuals and entities that bill through an ACO participant's TIN during the agreement period must be on the certified ACO provider/supplier list and agree to participate in the ACO. ACOs are required to maintain, update, and annually furnish the ACO participant and ACO provider/supplier lists to CMS at the beginning of each performance year and at such other times as may be specified by CMS (§ 425.304(d)).

We use TINs identified on the ACO participant list to identify claims billed to Medicare in order to support the assignment of Medicare fee-for-service beneficiaries to the ACO, the implementation of quality and other reporting requirements, and the determination of shared savings and losses (see section 1899(b)(2)(E) of the Act). We also use the ACO's initial (and annually updated) ACO participant list to: Identify parties subject to the screenings under § 425.304(b); determine whether the ACO satisfies the requirement to have a minimum of 5,000 assigned beneficiaries; establish the historical benchmark; perform financial calculations associated with quarterly and annual reports; determine preliminary prospective assignment for and during the performance year; determine a sample of beneficiaries for quality reporting; and coordinate participation in the Physician Quality Reporting System (PQRS) under the Shared Savings Program. Both the ACO participant and ACO provider/supplier lists are used to ensure compliance with program requirements. We refer readers to our guidance at *http://www.cms.gov/Medicare/Medicare-Fee-for-Service-Payment/sharedsavingsprogram/Updating-ACO-Participant-List.html* for more information.

In this section, we discuss current policy and procedures regarding the identification and required reporting of ACO participants and ACO providers/suppliers. In addition, we proposed revisions to our regulations to improve program transparency by ensuring that all ACO participants and ACO providers/suppliers are accurately identified.

b. Proposed Revisions

In the proposed rule, we stated that in order to administer the Shared Savings Program, we need to accurately identify the ACO participants and ACO providers/suppliers associated with each ACO that participates in the program. An accurate understanding of the ACO participants is critical for assignment of beneficiaries to the ACO as well as assessing the quality of care provided by the ACO to its assigned beneficiaries. An accurate understanding of the ACO providers/suppliers is also critical for ensuring compliance with program rules. We explained our belief that this information is equally critical to the ACO for its own operational and compliance purposes. Thus, both CMS and the ACO need to have a common understanding of the individuals and entities that comprise the ACO participants and ACO providers/suppliers. We obtain this common understanding by requiring the ACO to certify the accuracy of its ACO participant and ACO provider/supplier lists prior to the start of each performance year and to update the lists as changes occur during the performance year. Because we rely on these lists for both operational and program integrity purposes, we must have a transparent process that results in the accurate identification of all ACO participants and ACO providers/suppliers that compose each ACO in the Shared Savings Program.

We proposed to add a new § 425.118 to reflect with more specificity the requirements for submitting ACO participant and ACO provider/supplier lists and the reporting of changes to those lists. In addition, we proposed to revise § 425.204(c)(5) and to remove § 425.214(a) and § 425.304(d) because these provisions are addressed in new § 425.118.

(1) Certified Lists of ACO Participants and ACO Providers/Suppliers

In the proposed rule, we stated that we intended to continue to require ACOs to maintain, update and submit to CMS accurate and complete ACO participant and ACO provider/supplier lists, but we proposed to establish new § 425.118 to set forth the requirements and processes for maintaining, updating, and submitting the required ACO participant and ACO provider/supplier lists. New § 425.118 would consolidate and revise provisions at § 425.204(c)(5), § 425.214(a) and § 425.304(d) regarding the ACO participant and ACO provider/supplier lists. Specifically, we proposed at § 425.118(a) that prior to the start of the agreement period and before each performance year thereafter, the ACO must provide CMS with a complete and certified list of its ACO participants and their Medicare-enrolled TINs. We would use this ACO participant list to identify the Medicare-enrolled individuals and entities that are affiliated with the ACO participant's TIN in PECOS, the CMS enrollment system. We proposed that all individuals and entities currently billing through the Medicare enrolled TIN identified by the ACO as an ACO participant, must be included on the ACO provider/supplier list. We would provide the ACO with a list of all ACO providers/suppliers (NPIs) that we have identified in PECOS as associated with each ACO participant's Medicare-enrolled TIN. In accordance with § 425.118(a), the ACO would be required to review the list, make any necessary corrections, and certify the lists of all of its ACO participants and ACO providers/suppliers (including their TINs and NPIs) as true, accurate, and complete. In addition, we proposed that an ACO must submit certified ACO participant and ACO provider/supplier

lists at any time upon CMS request. We noted that all NPIs that reassign their right to receive Medicare payment to an ACO participant must be on the certified list of ACO providers/suppliers and must agree to be ACO providers/suppliers. We proposed to clarify this point in regulations text at § 425.118(a)(4).

Finally, in accordance with developing and certifying the ACO participant and provider/supplier lists, we proposed at § 425.118(d) to require the ACO to report changes in ACO participant and ACO provider/supplier enrollment status in PECOS within 30 days after such changes have occurred (for example, to report changes in an ACO provider's/supplier's reassignment of the right to receive Medicare payment or revocation of billing rights). This requirement would correspond with our longstanding policy that requires enrolled providers and suppliers to notify their Medicare Administrative Contractors through PECOS within specified timeframes for certain reportable events. We recognized that PECOS is generally not accessible to ACOs to make these changes directly because most ACOs are not enrolled in Medicare. Therefore, we stated that an ACO may satisfy the requirement to update PECOS throughout the performance year by requiring its ACO participants to submit the required information directly in PECOS within 30 days after the change, provided that the ACO participant actually submits the required information within 30 days. We proposed to require ACOs to include language in their ACO participant agreements (discussed in section II.B.1. of this final rule) to ensure compliance with this requirement. We did not propose to change the current 30-day timeframe required for such reporting in PECOS. These changes would be consistent with the current requirements regarding ACO participant and ACO provider/supplier list updates under § 425.304(d), and we explained our belief that they would enhance transparency and accuracy within the Shared Savings Program. We further proposed to remove § 425.304(d) because the requirements, although not modified, would be incorporated into new § 425.118(d).

In the proposed rule, we stated this revised process should afford the ACO the opportunity to work with its ACO participants to identify its ACO providers/suppliers and to ensure compliance with Shared Savings Program requirements. We also noted that currently, we also require the ACO to indicate whether the ACO provider/supplier is a primary care physician as defined in § 425.20. Because this information is derived from the claims submitted under the ACO participant's TINs (FQHCs and RHCs being the exception), we stated we found this rule unnecessary to implement the program, so we proposed to remove this requirement, which currently appears in § 425.204(c)(5)(i)(A).

Comment: A few commenters commented on our proposals to establish new § 425.118 to set forth requirements and processes for maintaining, updating, and submitting the required ACO participant and ACO provider/supplier lists. Several commenters agreed with our proposals. A commenter specifically agreed with the proposal but encouraged CMS to consider an extension or transition of the period in which ACOs are required to update their lists, noting that many commercial arrangements permit up to 6 months for ACOs to report relevant changes. A commenter supported the proposal that ACOs must comply with a CMS request for these certified lists contingent that CMS provides a reasonable timeframe in which to comply with such a request. A commenter specifically encouraged CMS to consider an extension or transition of the period in which ACOs are required to update their provider lists. Another commenter stated that CMS should provide ACOs with specific guidance on the process to submit, update, and maintain lists of ACO participants and ACO providers/suppliers as soon as possible to minimize the burden of notification.

Response: The certification of a complete list of ACO participants and their Medicare-enrolled TINs is imperative to ensuring appropriate assignment and ultimately reconciliation for all ACOs. It is important that ACOs take responsibility for maintaining and have the ability to produce these certified ACO participant and ACO provider/supplier lists at any time upon CMS request. We continue to refine the ACO Participant list change process and will inform ACOs about changes to the submission and review process during each performance year. Detailed guidance on this process can be found at *http://www.cms.gov/Medicare/Medicare-Fee-for-Service-Payment/sharedsavingsprogram/Updating-ACO-Participant-List.html*. As noted in the guidance, ACOs have several opportunities during the year to make changes that become effective for the next performance year. We therefore believe the timeframe is reasonable for notifying CMS of changes to the list. Furthermore, it is important that ACOs make such changes by the deadline specified by CMS so that operations such as beneficiary assignment and benchmarking can be completed and communicated to ACOs prior to the next performance year. Therefore, it is not possible to grant an ''extension'' or ''transition'' for this due date, unless ACOs are willing to receive benchmarking and assignment information well after the performance year has begun. It is our experience that ACOs prefer to have as much information in advance of a performance year as possible, and so for this reason, we must strictly enforce the due date for changes to the ACO provider list. We believe the deadlines for final notification of changes and certification of the ACO participant list are reasonable because they balance stakeholder desire to notify us as late as possible in the year with stakeholder desire to have beneficiary assignment and benchmarks calculated prior to the next performance year. A longer time period would require either earlier notification of changes or delay information for the next performance year.

Comment: Many commenters supported our proposal to remove the requirement (except for FQHCs and RHCs) to indicate whether an ACO provider/supplier is a primary care physician as defined at § 425.20. Several commenters agreed with our proposal to require the ACO to report changes in ACO participant and ACO provider/suppliers enrollment status in PECOS within 30 days after changes have occurred and to include this requirement in their ACO participant agreements to ensure compliance. A few commenters suggested that CMS incorporate a more reasonable timeframe by which the ACO participants and providers/suppliers must be submitted into PECOS. A commenter requested that CMS provide ACOs with specific guidance on this process as soon as possible and seek to minimize the burden associated with this notification requirement while another comment suggested that an ACO may not be notified and be able to in turn notify CMS of these changes within this same 30-day time period. The time period for the separate notification by the ACO of changes made in the PECOS system by ACO participants and ACO provider/suppliers should be modified to be ''within 30 days of ACO learning of such changes from an ACO Participant. Comments received agreed with our proposal that requires ACOs to include language in their ACO participant agreements (discussed in section II.B.1.

of this final rule) to ensure compliance with this requirement.

Response: Transparency and accuracy of the list of ACO participants and ACO providers/suppliers is of the highest importance to the success and integrity of the program. As previously described, it is our longstanding policy to require any changes to an ACO's participants or providers/suppliers be updated in PECOS within 30 days of such addition. This aligns with the Medicare requirement that requires enrolled providers and suppliers to notify their Medicare Administrative Contractors through PECOS within specified timeframes for certain reportable events. ACO participants and ACO providers/suppliers must make these changes; the ACO cannot make the changes directly in PECOS. However, the proposal to require ACOs to include language in their ACO participant agreements (discussed in section II.B.1. of this final rule) to comply with this requirement will strengthen the ACO's ability to educate and direct their ACO participants and ACO providers/suppliers to adhere to this Medicare requirement.

FINAL ACTION: We are finalizing policies as proposed at § 425.118 to set forth the requirements and processes for maintaining, updating, and submitting the required ACO participant and ACO provider/supplier lists.

Specifically, we are finalizing § 425.118(a) that prior to the start of the agreement period and before each performance year thereafter, the ACO must provide CMS with a complete and certified list of its ACO participants and their Medicare-enrolled TINs. All individuals and entities currently billing through the Medicare enrolled TIN identified by the ACO as an ACO participant, must be included on the ACO provider/supplier list. We would provide the ACO with a list of all ACO providers/suppliers (NPIs) that we have identified in PECOS as associated with each ACO participant's Medicare-enrolled TIN. In accordance with § 425.118(a), the ACO would be required to review the list, make any necessary corrections, and certify the lists of all of its ACO participants and ACO providers/suppliers (including their TINs and NPIs) as true, accurate, and complete. In addition, we are also finalizing our proposal at § 425.118 that an ACO must submit certified ACO participant and ACO provider/supplier lists at any time upon CMS request. These changes are consistent with the current requirements regarding ACO participant and ACO provider/supplier list updates under § 425.304(d) which will be incorporated into new § 425.118(d).

We are also finalizing our proposals at § 425.118(d) to require the ACO to report changes in ACO participant and ACO provider/supplier enrollment status in PECOS within 30 days after such changes have occurred (for example, to report changes in an ACO provider's/supplier's reassignment of the right to receive Medicare payment or revocation of billing rights). This requirement aligns with our longstanding policy that requires enrolled providers and suppliers to notify their Medicare Administrative Contractors through PECOS within specified timeframes for certain reportable events. Therefore, the ACO participant and ACO providers/suppliers must make this change within 30 days, not the ACO itself. However, the ACO is responsible for ensuring the ACO participant or ACO providers/suppliers make the change within the required 30 day time period. We are finalizing our policy to require ACOs to include language in their ACO participant agreements (discussed in section II.B.1. of this final rule) to improve the ability of the ACO to ensure compliance with this requirement.

Finally, we are finalizing the proposal to remove the requirement which currently appears in § 425.204(c)(5)(i)(A) that the ACO indicate primary care physicians on its application to the program.

(2) Managing Changes to ACO Participants

Except for rare instances, such as the cessation of ACO participant operations or exclusion from the Medicare program, we expect ACO participants to remain in the ACO for the entire 3-year agreement period. We believe that care coordination and quality improvement require the commitment of ACO participants. Moreover, as noted previously, we utilize the ACO participant list, among other things, for assigning beneficiaries to the ACO, determining the ACO's benchmark and performance year expenditures, and drawing the sample for ACO quality reporting. We understand that there are legitimate reasons why an ACO may need to update its list of ACO participants during the 3-year agreement period. Thus, under current § 425.214(a), an ACO may add or remove ACO participants (identified by TINs) throughout a performance year, provided that it notifies CMS within 30 days of such addition or removal.

If such changes occur, we may, at our discretion, adjust the ACO's benchmark, risk scores, and preliminary prospective assignment (§ 425.214(a)(3)). We articulated the timing of these changes in our guidance (*http://cms.gov/Medicare/Medicare-Fee-for-Service-Payment/sharedsavingsprogram/Updating-ACO-Participant-List.html*), which states that we adjust the ACO's historical benchmark at the start of a performance year if the ACO participant list that the ACO certified at the start of that performance year differs from the one it certified at the start of the prior performance year. We use the updated certified ACO participant list to assign beneficiaries to the ACO in the benchmark period (the 3 years prior to the start of the ACO's agreement period) in order to determine the ACO's adjusted historical benchmark. Our guidance provides that, as a result of changes to the ACO's certified ACO participant list, we may adjust the historical benchmark upward or downward. We use the new annually certified list of ACO participants and the adjusted benchmark for the following program operations: The new performance year's assignment; quality measurement and sampling; reports for the new performance year; and financial reconciliation. We provide ACOs with the adjusted Historical Benchmark Report reflecting these changes.

However, our guidance stated that absent unusual circumstances, changes in ACO participants that occur in the middle of a performance year will not result in midyear changes to assignment, sampling for quality reporting, financial reconciliation, or other matters.

As indicated in our guidance, the midyear removal of an entity from the ACO participant list due to program integrity issues is one unusual circumstance that could result in midyear changes to assignment and other matters. Finally, our guidance states that we do not make adjustments upon Medicare payment changes such as wage-index adjustments, or the addition or deletion of ACO participants during the course of the performance year made by the ACO and ACO participants.

We proposed to add new provisions at § 425.118(b) to address the procedures for adding and removing ACO participants during the agreement period. These proposals would revise the regulations to incorporate some of the important policies that we have implemented through our operational guidance as well as some additional proposals to ease the administrative burden generated by the magnitude of changes made to ACO participant lists to date.

We proposed under § 425.118(b)(1) that an ACO must submit a request to add a new entity to its ACO participant list in the form and manner specified by CMS and that CMS must approve additions to the ACO participant list before they can become effective. We stated our belief that ACO participants should be admitted into the program if, for example, the screening conducted under § 425.304(b) reveals that the entity has a history of program integrity issues, or if the ACO participant agreement with the entity does not comply with program requirements, or if the entity is participating in another Medicare shared savings initiative (§ 425.114). If CMS denies the request to add an entity to the ACO participant list, then the entity would not be eligible to participate in the ACO for the upcoming performance year.

We proposed that, if CMS approves the request, the entity would be added to the ACO participant list at the beginning of the following performance year. That is, entities that are approved for addition to the ACO participant list would not become ACO participants, and their claims would not be considered for purposes of benchmarking, assignment and other operational purposes, until the beginning of the next performance year. For example, if an ACO notifies CMS of the addition of an entity in June of the second performance year (PY2), the entity would not become an ACO participant and its claims would not be included in program operations until January 1 of PY3 if CMS approves the entity's addition.

We proposed that an ACO must notify CMS no later than 30 days after the date of termination of the entity's ACO participant agreement, although the ACO may notify CMS in advance of such termination. We proposed that the ACO must submit the notice of removal, which must include the date of termination, in the form and manner specified by CMS. We proposed that the removal of the ACO participant from the ACO participant list would be effective on the date of termination of the ACO participant agreement.

We proposed at § 425.118(b)(3)(i) that changes made by an ACO to its annually certified ACO participant list would result in adjustments to its historical benchmark, assignment, quality reporting sample, and the obligation of the ACO to report on behalf of eligible professionals for certain CMS quality initiatives. We would annually adjust the ACO's benchmark calculations to include (or exclude) the claims submitted during the benchmark years by the newly added (or removed) ACO participants. In other words, the annually certified ACO participant list would be used for purposes of subparts E (assignment of beneficiaries), F (quality performance assessment), and G (calculation of shared savings/losses) for the performance year. For example, if an ACO began program participation in 2013, the PY1 certified list would be used to generate an historical benchmark calculated from claims submitted by the TINs on the PY1 certified list during CY 2010, 2011, and 2012. If the ACO adds ACO participants during 2013 and certifies an updated list for PY2 reflecting those additions, we would adjust the historical benchmark to accommodate those changes by recalculating the benchmark using the claims submitted by the PY2 list of certified ACO participants during the ACO's same benchmark years (CYs 2010, 2011, and 2012). In this way, the ACO's benchmark would continue to be based on the same 3 years prior to the start of the ACO's agreement, but our proposal would ensure that the changes in ACO composition and performance year calculations retain a consistent comparison between benchmark and performance during the agreement period.

As noted previously, adjustment to the ACO's historical benchmark as a result of changes to the ACO's certified ACO participant list may move the benchmark upward or downward. We would use the annual certified ACO participant list and the adjusted benchmark for the new performance year's beneficiary assignment, quality measurement and other operations that are dependent on the ACO participant list as outlined in our guidance. We would provide ACOs with an adjusted Historical Benchmark Report that reflects the new certified ACO participant list. We proposed to add this requirement at § 425.118(b)(3).

We proposed at § 425.118(b)(3)(ii) to codify the policy we established in guidance that, absent unusual circumstances, the removal of an ACO participant from the ACO participant list during the performance year must not affect certain program calculations for the remainder of the performance year in which the removal becomes effective. Namely, the removal of an entity from the ACO participant list during the performance year would not affect the ACO's beneficiary assignment or, by extension, such program operations as the calculation of the ACO's historical benchmark, financial calculations for quarterly and annual reporting, the sample of beneficiaries for quality reporting, or the obligation of the ACO to report on behalf of eligible professionals for certain quality initiatives. In other words, absent unusual circumstances, CMS would use only the ACO participant list that is certified at the beginning of a performance year to assign beneficiaries to the ACO under subpart E and to determine the ACO's quality and financial performance for that performance year under subparts F and G. We gave examples of unusual circumstances that might justify midyear changes, including the midyear removal of an ACO participant due to evidence of avoidance of at-risk beneficiaries or other program integrity issues.

For example, if an ACO participant is on the ACO's certified list of ACO participants for the second performance year, and the ACO timely notifies CMS of the termination of the entity's ACO participant agreement effective June 30th of PY2, the ACO participant would be removed from the ACO participant list effective June 30th of PY2. However, the former ACO participant's TIN would still be used for purposes of calculating the quality reporting requirements, financial reports, benchmarking, assignment and reporting of PQRS, meaningful use of EHR, and the value-based modifier. The ACO participant list that was certified at the start of the performance year governs the assessment of the ACO's financial and quality performance for that year, regardless of changes to the list during the performance year. We explained our belief that this is necessary to help create some stability in the assessment of the ACO's quality and financial performance for each performance year. If CMS had to modify underlying program operations each time an ACO added or removed a TIN from its list of ACO participants, the ACO would not be able to rely on information (such as the calculation of the historical benchmark) that we provide before the beginning of the performance year.

We stated our belief that it is important for ACOs to communicate effectively with ACO participants that seek to join an ACO so that they understand the potential impact to the ACO, the ACO participant, and the ACO providers/suppliers affiliated with the ACO participant when an ACO participant leaves during a performance year. For example, it is likely that the ACO would be required to report quality data for beneficiaries that were seen by the former ACO participant in the previous 12 months. The ACO must work with the former ACO participant to obtain the necessary quality reporting data. Additionally, the ACO participant would not be able to qualify for PQRS

incentive payment or avoid the PQRS payment adjustment separately from the ACO for that performance year. Therefore, we stated that it is in the best interest of both parties to understand this in advance and to commit to working together to fulfill the obligations for the performance year. To assist ACO and ACO participants, we proposed criteria for ACO participant agreements addressing this issue (see section II.B.1. of this final rule).

Comment: Many commenters supported our proposals related to adding and removing an ACO participant TIN midyear and having these added TINs become effective for the benchmark, assignment, and other operational processes on January 1 of the following year of the agreement period. A few commenters encouraged CMS to allow participant TINs to be added at any point in the agreement period and to be automatically reflected in a ACOs benchmarking and assignment. A few commenters recommended that CMS only alter the ACO's benchmark, risk score, and assignment if there is a substantial change to the ACO participant list. Others commenters supported the proposal to limit removal of ACO participants to once a year, except in the event of a compliance issue or business failure.

Response: As noted, these proposals are consistent with current operational guidance. Given the high number of requests for modification to ACO participant lists, we believe these policies are necessary to create stability in the assessment of ACOs. It is not feasible to modify underlying program operations each time an ACO adds or removes a TIN from its list of ACO participants. If we were to do this, the ACO would have unwanted midyear fluctuations in the preliminary prospectively assigned beneficiary population, benchmark, and quality sample. Given that we are finalizing other proposed changes in other sections of this rule in response to ACO requests for stability in operations, permitting midyear changes in TINs that affect operations during the performance year would be counterproductive. However, not making such modifications at the beginning of each performance year to account for changes to the ACO participant list could create disparities between the benchmark and performance year financial calculations, either disproportionately advantaging or disadvantaging the ACO. Additionally, because there is no uniformity in the number of ACO providers/suppliers that bill through the TIN of an ACO participant, we will not adjust benchmarks to account only for substantial changes to the ACO participant list. Therefore, we are finalizing our proposal to update the ACO's assignment and benchmark at the start of each new performance year to reflect modifications that the ACO makes to its certified list of ACO participants. We believe this policy is both fair and reduces the opportunity for gaming.

Comment: A commenter noted that the requirement for ACO participants that are removed during a performance year to continue to assist the ACO with quality reporting, sometimes months after leaving the ACO, can create problems for ACO quality data collection.

Response: As previously discussed, we believe it is important for ACOs to transparently communicate expectations to prospective ACO participants and that both the ACO and its ACO participants make a commitment to the 3-year agreement. In this way, there will be no misunderstandings regarding required close-out procedures, including required quality reporting. To assist the ACO in this regard, we are finalizing certain requirements for ACO participant agreements as discussed in section II.B.1 of this final rule, including the obligation of the ACO participant and ACO to complete close-out procedures which include quality reporting requirements.

Comment: Some commenters requested that ACOs be allowed to add participants any time during a performance year up until November 30th while others objected to having to certify ACO participant lists prior to January 1 of the next performance year. Another commenter, disagreed with the requirement that an ACO participant TIN be screened and approved for participation by CMS before being added to the ACO participant list, stating this adds burden for the ACO.

Response: Timelines for final submission of changes to the ACO participant list at the end of a performance year are established in order to properly screen, obtain certified lists for the new performance year, and determine new benchmarks and assignments for the new performance year. Delaying these timelines would result in delays of issuance of new performance year information for the ACO. We will continue to evaluate this issue and our timelines to ensure the best balance between the timing of end of year changes and creation of information for the ACO's next performance year. Finally, to protect the integrity of the Shared Savings Program, we must screen all ACO participant TINs that are added during a performance year without exception. Such screening takes time, although it is done as quickly as possible, but we do not agree that this necessity imposes undue burden for ACOs.

FINAL ACTION: We are finalizing our proposals at § 425.118(b) related to changes in the ACO participant list. Specifically, we are finalizing our proposal under § 425.118(b)(1) that an ACO must submit a request to add a new entity to its ACO participant list in the form and manner specified by CMS and that CMS must approve additions to the ACO participant list before they can become effective on January 1 of the following performance year. We are also finalizing our proposal at § 425.118(b)(2) that an ACO must notify CMS no later than 30 days after the termination of an ACO participant agreement and that the notice must be submitted in the form and manner specified by CMS and must include the date of the termination date of the ACO participant agreement. The entity will be deleted from the ACO participant list as of the termination date of the ACO participant agreement. Finally, we are finalizing our proposal at § 425.118(b)(3)(i) that any changes made by an ACO to its annually certified ACO participant list would result in adjustments to its historical benchmark, assignment, quality reporting sample, and the obligation of the ACO to report on behalf of eligible professionals for certain CMS quality initiatives. Additionally, absent any public comment and for the reasons noted in the proposed rule, we are finalizing our proposal at § 425.118(b)(3)(ii) to codify the policy we established in guidance that, absent unusual circumstances, the removal of an ACO participant from the ACO participant list during the performance year must not affect certain program calculations for the remainder of the performance year in which the removal becomes effective. However, we are making a minor revision to the text of the provisions at both § 425.118(b)(3)(i) and § 425.118(b)(3)(ii) to replace the references to ACO providers/suppliers with a reference to ''eligible professionals that bill under the TIN of an ACO participant.'' We believe this change is necessary to clarify that the requirement that the ACO report on behalf of these eligible professionals applies even if they are not included on the ACO provider/supplier list. For example, an ACO must still report quality data for services billed under the TIN of an ACO participant by an eligible professional that was an ACO provider/

supplier for a portion of the performance year but was removed from the ACO provider/supplier list midyear when he or she started a new job and ceased billing under the TIN of the ACO participant.

(3) Managing Changes to ACO Providers/Suppliers

We recognize that ACO providers/suppliers may terminate their affiliation with an ACO participant or affiliate with new or additional Medicare-enrolled TINs (which may or may not be ACO participants) on a frequent basis. Thus, the annual certified ACO provider/supplier list may quickly become outdated. In order to ensure that CMS and the ACO have a common understanding of which NPIs are part of the ACO at any particular point in time, our regulations at § 425.214 set forth requirements for managing changes to the ACO during the term of the participation agreement. Specifically, §§ 425.214(a)(2) and 425.304(d)(2) require an ACO to notify CMS within 30 days of the addition or removal of an ACO provider/supplier from the ACO provider/supplier list.

We proposed new § 425.118(c) on how to report changes to the ACO provider/supplier list that occur during the performance year. Under proposed § 425.118(c), ACOs would continue to be required to report these changes within 30 days. As discussed later in this section, we would require the ACO to ensure that changes in ACO participant and ACO provider/supplier enrollment status are reported in PECOS. However, because the lists of ACO providers/suppliers cannot be maintained in PECOS, we proposed to require ACOs to notify CMS' Shared Savings Program separately, in the form and manner specified by CMS, of the addition or removal of an ACO provider/supplier. In the proposed rule, we stated our expectation that ACOs would be required to send such notifications via electronic mail and that specific guidance regarding this notification process would be provided by the Secretary on the CMS Web site and through the ACO intranet portal or both.

We proposed that an ACO may add an individual or entity to the ACO provider/supplier list if it notifies CMS within 30 days after the individual or entity became a Medicare-enrolled provider or supplier that bills for items and services it furnishes to Medicare fee-for-service beneficiaries under a billing number assigned to the TIN of an ACO participant. We proposed that if the ACO provided such notice by the 30-day deadline, the addition of an ACO provider/supplier would be effective on the date specified in the notice furnished to CMS but no earlier than 30 days before the date of notice. If the ACO failed to provide timely notice to CMS regarding the addition of an individual or entity to the ACO provider/supplier list, then the addition would become effective on the date CMS receives notice from the ACO. However, we noted that when an individual has begun billing through the TIN of an ACO participant but is not on the ACO provider/supplier list, the individual would satisfy the definition of ''ACO professional,'' in which case his or her claims for services furnished to Medicare fee-for-service beneficiaries would be considered for assignment and other operational purposes previously described.

Each potential ACO provider/supplier that reassigns his or her billing rights under the TIN of an ACO participant is screened by CMS through the enrollment process and PECOS system. Additionally, the Shared Savings Program conducts additional screening on a biannual basis for each ACO provider/supplier through the CMS Fraud Prevention System. In spite of this, we stated our concern that the proposed effective date for the addition of an individual or entity to the ACO provider/supplier list would prevent us from conducting a robust program integrity screening of such individuals and entities. Therefore, we considered whether to delay the effective date of any additions to the ACO provider/supplier list until after we have completed a program integrity screening of the individuals or entities that the ACO wishes to add to the list. For example, we considered whether to delay the effective date of additions to the ACO provider/supplier list until the start of the next performance year, similar to the timing for adding TINs of ACO participants to the list of ACO participants. In this way, a complete yearly screening, including screening for program integrity issues, could occur at one time for both the ACO participant list and the ACO provider/supplier list. As previously noted, until the individual or entity has been officially designated as an ACO provider/supplier, that individual or entity would be an ACO professional because of its billing relationship with the ACO participant. Thus, any claims billed by the ACO professional through the TIN of the ACO participant would be used for assignment and related activities during the performance year in which the change takes place, regardless of whether the individual or entity subsequently becomes an ACO provider/supplier. We sought comment on this proposal.

We proposed to remove an ACO provider/supplier from the ACO provider/supplier list, an ACO must notify CMS no later than 30 days after the individual or entity ceases to be a Medicare-enrolled provider or supplier that bills for items and services it furnishes to Medicare fee-for-service beneficiaries under a billing number assigned to the TIN of an ACO participant. The individual or entity would be removed from the ACO provider/supplier list effective as of the date the individual or entity terminates its affiliation with the ACO participant.

Comment: A few commenters commented on our proposed addition at § 425.118(c) regarding requirements for changes to the ACO provider/supplier list and were in agreement with our proposals. A commenter expressed concern about the time frames, specifically having to receive notification from the ACO provider/supplier and then notifying CMS within the required 30 days of such a change. In addition, this commenter suggested the regulations be modified to require notification to CMS within 30 days of notification to the ACO by the ACO participant.

Response: We appreciate the support for these proposals and will finalize them as proposed. We believe the requirement for an ACO to notify CMS within 30 days of a change is appropriate because it is consistent with PECOS enrollment requirements and current program rules. We note that if the ACO provider/supplier is not formally added to the ACO's list of ACO providers/suppliers, the individual billing through the TIN of an ACO participant would be an ACO professional and as such, his or her claims would be included in operations related to such things as beneficiary assignment during the performance year in which the entity begins billing. However, the ACO must develop internal processes to identify such entities to comply with program rules.

FINAL ACTION: We are finalizing our proposals at § 425.118(c) as proposed for managing changes to ACO providers/suppliers.

Specifically, we are finalizing our proposal that an ACO must notify CMS within 30 days after the individual or entity becomes a Medicare-enrolled provider or supplier that bills for items and services it furnishes to Medicare fee-for-service beneficiaries under a billing number assigned to the TIN of an ACO participant. The addition of an ACO provider/supplier would be

effective on the date specified in the notice furnished to CMS but no earlier than 30 days before the date of notice. Additionally, we are finalizing our proposal that an ACO must notify CMS no later than 30 days after the individual or entity ceases to be a Medicare-enrolled provider or supplier that bills for items and services it furnishes to Medicare fee-for-service beneficiaries under a billing number assigned to the TIN of an ACO participant. The removal of an individual or entity from the ACO provider/supplier list is effective as of the date the individual or entity ceases to be a Medicare-enrolled provider or supplier that bills for items and services furnished to Medicare fee-for-service beneficiaries under a billing number assigned to the TIN of the an ACO participant. Notices must be submitted in the form and manner specified by CMS.

(4) Update of Medicare Enrollment Information

We proposed at § 425.118(d) to require the ACO to ensure that changes in ACO participant and ACO provider/supplier enrollment status are reported in PECOS consistent with § 424.516 (for example, changes in an ACO provider's/supplier's reassignment of the right to receive Medicare payment or revocation of billing rights). As previously discussed in detail, this proposed requirement would correspond with our longstanding policy that requires enrolled providers and suppliers to notify their Medicare Administrative Contractors through PECOS within specified timeframes for certain reportable events.

Comment: A commenter requested that we not finalize the proposed requirement because ACOs cannot ensure that third parties will report changes in PECOS and ACOs do not have the legal authority to enforce this requirement. Another commenter suggested that CMS provide ACOs with specific guidance on this process as soon as possible to minimize burden associated with the notification requirement.

Response: We believe it is important that the ACO ensure that changes in ACO participant and ACO provider/supplier enrollment status are reported in PECOS consistent with current Medicare rules at § 424.516. This requirement ensures that both the ACO and CMS have a complete and accurate understanding of precisely which individuals and entities are treating Medicare beneficiaries in the Shared Savings Program and are therefore subject to the requirements of part 425. Under new § 425.116, ACO participant and ACO provider/supplier agreements must require the ACO participant and ACO provider/supplier to update enrollment information in a timely manner and to notify the ACO of such changes within 30 days. Thus, through its agreements with ACO participants and ACO providers/suppliers, ACOs will have the ability to require timely reporting of enrollment changes and to enforce this requirement.

FINAL ACTION: We are finalizing our proposal at § 425.118(d) to require the ACO to ensure that changes in ACO participant and ACO provider/supplier enrollment status are reported in PECOS consistent with § 424.516 (for example, changes in an ACO provider's/supplier's reassignment of the right to receive Medicare payment or revocation of billing rights).

4. Significant Changes to an ACO

a. Overview

Section 425.214(b) requires an ACO to notify CMS within 30 days of any significant change. A significant change occurs when an ACO is no longer able to meet the Shared Savings Program eligibility or program requirements (§ 425.214(b)). Upon receiving an ACO's notice of a significant change, CMS reviews the ACO's eligibility to continue participating in the Shared Savings Program and, if necessary, may terminate the ACO's participation agreement (§ 425.214 (c)). In addition, § 425.214(c)(2) provides that CMS may determine that a significant change has caused the ACO's structure to be so different from what was approved in the ACO's initial application that it is no longer able to meet the eligibility or program requirements. Under such circumstances, CMS would terminate the ACO's participation agreement, and permit the ACO to submit a new application for program participation. In the November 2011 final rule (76 FR 67840), we noted that changes to an ACO participant list could constitute a significant change to an ACO if, for example, the removal of a large primary care practice from the list of ACO participants caused the number of assigned beneficiaries to fall below 5,000.

b. Proposed Revisions

In light of changes proposed in the section II.B.3. of this final rule, we proposed to redesignate § 425.214(b) and (c) as § 425.214(a) and (b). Second, we proposed to describe when certain changes to the ACO constitute a significant change to the ACO. We believe that a change in ownership of an ACO or the addition or deletion of ACO participants could affect an ACO's compliance with the governance requirements in § 425.106 or other eligibility requirements. We noted that some changes to the ACO participant list may be of such a magnitude that the ACO is no longer the same entity as when it was originally approved for program participation. In addition, depending on the nature of the change in ownership, the ACO would need to execute a new participation agreement with CMS if the existing participation agreement is no longer with the correct legal entity. We stated that such changes would constitute significant changes and should be subject to the actions outlined under § 425.214(b). Therefore, we proposed to specify at § 425.214(a) that a significant change occurs when the ACO is no longer able to meet the eligibility or other requirements of the Shared Savings Program, or when the number or identity of ACO participants included on the ACO participant list, as updated in accordance with § 425.118, changes by 50 percent or more during an agreement period. For example, in the case of an ACO whose initial certified ACO participant list contained 10 ACO participants, five of which gradually left the ACO and either were not replaced or were replaced with five different ACO participants, the ACO would have undergone a significant change because the number or identity of its ACO participants changed by 50 percent. Similarly, if an ACO's initial certified ACO participant list contains 20 ACO participants, and the ACO incrementally adds 10 new ACO participants for a total of 30 ACO participants, it would have undergone a significant change with the addition of the 10th new ACO participant.

Upon notice from an ACO that experienced a significant change, we would evaluate the ACO's eligibility to continue participating in the Shared Savings Program and make one of the determinations listed in the provision we proposed to redesignate as § 425.214(b). We may request additional information to determine whether and under what terms the ACO may continue in the program. We noted that a determination that a significant change has occurred would not necessarily result in the termination of the ACO's participation agreement. We proposed to modify § 425.214 to provide that an ACO's failure to notify CMS of a significant change must not preclude CMS from determining that the ACO has experienced a significant change.

In addition, we sought comment on whether we should consider amending our regulations to clarify that the ACO

must provide notice of a significant change prior to the occurrence of the significant change. We believe some significant changes could require a longer notice period, particularly in the case of a change of ownership that causes the ACO to be unable to comply with program requirements. Therefore, we sought comment on whether ACOs should be required to provide 45 or 60 days' advance notice of a significant change. We also sought comment on what changes in the ACO participant list should constitute a significant change.

Comment: Many commenters agreed with our proposals which specify at § 425.214(a) that a significant change occurs when the ACO is no longer able to meet the eligibility or other requirements of the Shared Savings Program, or when the number or identity of ACO participants included on the ACO participant list, as updated in accordance with § 425.118, changes by 50 percent or more during an agreement period. However, we received several comments from stakeholders that opposed or questioned how a change in ACO participant TINs might represent a significant change. Several commenters stated that a simple 50 percent threshold does not necessarily identify a major change and recommended that CMS take into consideration that a 50 percent change for a small ACO could be the turnover a very small number of TINs. Commenters suggested an alternative approach that looks at a percentage change in ACO providers/suppliers or assigned beneficiaries as opposed to changes in ACO participant TINs. A commenter noted that changes in ACO participant TINs should not be confused with the ability of the ACO to meet eligibility requirements.

Response: At the inception of the program, we did not anticipate that ACOs would make changes to ACO participant TINs to the extent they have because program rules require the ACO and its ACO participants to make a commitment to the 3-year participation agreement according to § 425.306(a). Such changes raise concerns that are unrelated to the ability of an ACO to meet eligibility requirements, such as gaming or the ability of the ACO participants to develop and adhere to the care coordination processes established by the ACO that are necessary to succeed in the ACO's goals of improving quality and reducing growth in costs for its assigned population. However, although we still have reservations about ACOs that have dramatic ACO participant list changes, we understand that the use of the 50 percent measure may not be the best mechanism for determining whether an ACO has undergone a significant change. Therefore at this time we will not finalize the proposed change that would designate an ACO as undergoing a significant change if its ACO participant list changes by 50 percent or more during an agreement period. However, we intend to monitor such changes and may audit and request additional information from ACOs that undergo changes in their list of ACO participant TINs over the course of the agreement period in order to better understand the implications and impacts of such changes. We may revisit this issue in future rulemaking, pending additional experience with the program.

Comment: A number of commenters noted it is not always possible for an ACO to provide advance notice of a significant change because some changes may not actually come to fruition or may happen on a tight schedule. These commenters suggested that, if finalized, advanced notice of a significant change should only be required when possible or on a case-by-case basis. A commenter stated that CMS should give ACOs a minimum of 45 days advance notice when the ACO has undergone a significant change to permit sufficient time for the ACO to make appropriate modifications.

Response: We thank stakeholders for responding to our request for comment on whether we should consider amending our regulations to clarify that the ACO must provide notice of a significant change prior to the occurrence of the significant change. At this time, we will continue to require ACOs to notify us within 30 days after the occurrence of a significant change. Because it may not be possible to provide sufficient advance notice of a significant change, we will not require ACOs to give us advanced notice of such events, but we strongly encourage ACOs to alert us in advance when, for example, significant organizational changes occur or are likely to occur that may impact the ability of the ACO to continue to meet eligibility requirements. Notifying us in advance of such changes gives us the opportunity to work with the ACO to ensure compliance and avoid unanticipated operational pitfalls for the ACO. Similarly, if we become aware of a significant change that has occurred to an ACO, we will alert the ACO as soon as possible and indicate the timeframe in which it is necessary for the ACO to comply.

FINAL ACTION: We are finalizing our proposal to redesignate § 425.214(b) and (c) as § 425.214(a) and (b). We are also finalizing our proposal to modify § 425.214 to continue to require an ACO to alert us when a significant change occurs and to provide that an ACO's failure to notify CMS of a significant change does not preclude CMS from determining that the ACO has experienced a significant change. Finally, based on comments, we are not finalizing our proposal to specify at § 425.214(a) that a significant change occurs when the number or identity of ACO participants included on the ACO participant list, as updated in accordance with § 425.118, changes by 50 percent or more during an agreement period. However, we will continue to monitor this issue and may audit or otherwise request information from ACOs with changes to the ACO participant list during the agreement period. Although we are not at this time requiring advanced notice of significant changes, we believe that it is in the best interest of the ACO to contact us in advance if it believes that an organizational change, such as a change in ownership, may occur so that we can work with the ACO to ensure continued compliance and avoid operational pitfalls.

5. Consideration of Claims Billed by Merged/Acquired Medicare-Enrolled Entities

a. Overview

As discussed in the November 2011 final rule (76 FR 67843), we do not believe that mergers and acquisitions by ACO providers and suppliers are the only way for an entity to become an ACO. The statute and our regulations permit ACO participants that form an ACO to use a variety of collaborative organizational structures, including collaborations other than merger. We reject the proposition that an entity under single control, that is, an entity formed through a merger, would be more likely to meet the goals of improved health at a lower cost. However, we have received questions from industry stakeholders regarding how previous mergers and acquisitions of entities with Medicare enrolled billing TINs will be treated for purposes of the Shared Savings Program. In particular, some applicants have inquired whether the claims billed to Medicare in previous years by an entity that has since been merged with, or acquired by, a different entity could be used to determine whether an applicant meets the requirement to have at least 5,000 beneficiaries assigned to it in each of the benchmark years (§ 425.110) and to establish the ACO's historical benchmark and preliminary prospective

assignment. To illustrate, suppose a large group practice that is a prospective ACO participant recently purchased two small primary care practices, and the primary care practitioners from those small practices have reassigned the right to receive Medicare payment to the larger group practice Medicare-enrolled TIN. In this instance, it is likely that the primary care providers will continue to serve the same patient population they served before the practices were purchased, and that their patients may appear on the ACO's list of assigned beneficiaries at the end of the performance year. Therefore, applicants and established ACOs have inquired whether there is a way to take into account the claims billed by the Medicare-enrolled TINs of practices acquired by sale or merger for purposes of meeting the minimum assigned beneficiary threshold and creating a more accurate benchmark and preliminary prospective list of assigned beneficiaries for the upcoming performance year. Similarly, an established ACO may request consideration of the claims billed by the Medicare-enrolled TINs of entities acquired during the course of a performance year for the same purposes.

In response to questions from industry stakeholders, we provided additional guidance on our Web site to all Shared Savings Program applicants about the requirements related to mergers and acquisitions (see *http://www.cms.gov/Medicare/Medicare-Fee-for-Service-Payment/sharedsavingsprogram/Downloads/Merger-Acquisitions-FAQ.pdf*). In this guidance, we indicated that under the following circumstances, we may take the claims billed under TINs of entities acquired through purchase or merger into account for purposes of beneficiary assignment and the ACO's historical benchmark:

- The ACO participant must have subsumed the acquired entity's TIN in its entirety, including all the providers and suppliers that reassigned the right to receive Medicare payment to that acquired entity's TIN.
- All the providers and suppliers that previously reassigned the right to receive Medicare payment to the acquired entity's TIN must reassign that right to the TIN of the acquiring ACO participant.
- The acquired entity's TIN must no longer be used to bill Medicare.

In order to attribute the billings of merged or acquired TINs to the ACO's benchmark, the ACO applicant must—

- Submit the acquired entity's TIN on the ACO participant list, along with an attestation stating that all providers and suppliers that previously billed under the acquired entity's TIN have reassigned their right to receive Medicare payment to an ACO participant's TIN;
- Indicate the acquired entity's TIN and which ACO participant acquired it; and
- Submit supporting documentation demonstrating that the entity's TIN was acquired by an ACO participant through a sale or merger and submit a letter attesting that the acquired entity's TIN will no longer be used to bill Medicare.

We noted in the proposed rule that we require an applicant's list of ACO providers/suppliers to include all individuals who previously billed under the acquired entity's TIN to have reassigned their right to receive Medicare payment to an ACO participant's TIN.

We stated that the policies set forth in our guidance were necessary to ensure that these entities have actually been completely merged or acquired and that it would be likely that the primary care providers will continue to serve the same patient population. In this way, the beneficiary assignments and the benchmarks would be more accurate for ACOs that include merged or acquired Medicare-enrolled TINs under which their ACO professionals billed during application or updates to the ACO participant list.

b. Proposed Changes

In the proposed rule, we stated that current guidance and processes are working well and benefit both CMS (for example, by providing assurance that an entity's Medicare-enrolled billing TIN have actually been acquired through sale or merger) and the affected ACOs (for example, by allowing for an increase in the ACO's number of appropriately assigned beneficiaries and providing for a more accurate financial benchmark). To avoid uncertainty and to establish a clear and consistent process for the recognition of the claims previously billed by the TINs of acquired entities, we proposed to codify the current operational guidance on this topic at § 425.204(g) with some minor revisions to more precisely and accurately describe our proposed policy. Proposed § 425.204(g) would add the option for ACOs to request consideration of claims submitted by the Medicare-enrolled TINs of acquired entities as part of their application, and would address the documentation requirements for such requests. We noted that although this provision is added in § 425.204 regarding the content of the initial application, we proposed to permit ACOs to annually request consideration of claims submitted by the TINs of entities acquired through sale or merger upon submission of the ACO's updated list of ACO participants.

Comment: All commenters supported our proposal to allow ACOs to request consideration of claims submitted by the Medicare-enrolled TINs of acquired entities as part of their application and to permit ACOs to annually request consideration of claims submitted by the TINs of entities acquired through sale or merger upon submission of the ACO's updated list of ACO participants. A commenter encouraged CMS to provide as much flexibility as possible to take the billings of merged or acquired TINs into account because the ACO marketplace may undergo significant changes in the future (for example, mergers and acquisitions of ACOs).

Response: We appreciate the comments supporting our proposals. We agree that finalizing these proposals will establish a clear and consistent process for the recognition of the claims previously billed by the TINs of acquired entities. We believe we are providing as much flexibility as possible at this time, although we are open to considering additional flexibilities in future rulemaking. We invite stakeholders to let us know what specific additional flexibilities may be warranted in the future.

FINAL ACTION: We are finalizing our proposal to codify the current operational guidance on consideration of claims billed by merged or acquired TINs at § 425.204(g), including our proposals for minor revisions to more precisely and accurately describe our policy. Specifically, we are finalizing the proposal at § 425.204(g) to add the option for ACOs to request consideration of claims submitted by the Medicare-enrolled TINs of acquired entities as part of their application, and address the documentation requirements for such requests. We are finalizing at § 425.118(a)(2) our proposal to permit ACOs to annually request consideration of claims submitted by the TINs of entities acquired through sale or merger upon submission of the ACO's updated list of ACO participants. Specifically, § 425.118(a)(2) provides that such requests may be made in accordance with the process set forth at § 425.204(g). More detailed information on the manner, format, and timelines for ACOs to submit such requests will be found in operational documents and guidance.

6. Legal Structure and Governance

Section 1899(b)(1) of the Act requires ACO participants to have established a ''mechanism for shared governance'' in order to be eligible to participate as ACOs in the Shared Savings Program. In addition, section 1899(b)(2)(C) of the Act requires the ACO to have a formal legal structure that allows the organization to receive and distribute shared savings payments to ACO participants and ACO providers/suppliers. We believe the formal legal structure should be designed and implemented to protect against conflicts of interest or other improper influence that may otherwise arise from the receipt and distribution of payments or other ACO activities. We proposed clarifications to our rules related to the ACO's legal entity and governing body. The purpose of these proposed changes was to clarify our regulations and to ensure that ACO decision-making is governed by individuals who have a fiduciary duty, including a duty of loyalty, to the ACO alone and not to any other individuals or entities. We believe the proposed changes are relatively minor and would not significantly impact the program as currently implemented.

a. Legal Entity and Governing Body

(1) Overview

As specified in the November 2011 final rule (76 FR 67816) and at § 425.104(a), an ACO must be a legal entity, formed under applicable state, federal, or tribal law, and authorized to conduct business in each state in which it operates for the following purposes:

- Receiving and distributing shared savings.
- Repaying shared losses or other monies determined to be owed to CMS.
- Establishing, reporting, and ensuring provider compliance with health care quality criteria, including quality performance standards.
- Fulfilling other ACO functions identified in this part.

Additionally, under § 425.104(b), an ACO formed by two or more ''otherwise independent'' ACO participants must be a legal entity separate from any of its ACO participants. Our regulations at § 425.106(b)(4) further specify that when an ACO comprises ''multiple, otherwise independent ACO participants,'' the governing body of the ACO must be ''separate and unique to the ACO.'' In contrast, if the ACO is an ''existing legal entity,'' the ACO governing body may be the same as the governing body of that existing legal entity, provided it satisfies all other requirements of § 425.106, including provisions regarding the fiduciary duties of governing body members, the composition of the governing body, and conflict of interest policies (§ 425.106(b)(5)).

We noted in the proposed rule that some applicants questioned when an ACO needs to be formed as a separate legal entity, particularly the meaning in § 425.104(b) of ''otherwise independent'' ACO participants. Specifically, applicants questioned whether multiple prospective ACO participants are ''otherwise independent'' when they have a prior relationship through, for example, an integrated health system. In addition, we received some questions regarding compliance with the governing body requirements set forth in § 425.106(b)(4) and (5). For example, we received questions from some IPAs, each of which wanted to apply to the Shared Savings Program as an ACO using its existing legal structure and governing body. In some cases, the IPA represented many group practices, but not every group practice represented by an IPA had agreed to be an ACO participant. In the proposed rule, we stated that that such an IPA would need to organize its ACO as a separate legal entity with its own governing body to ensure that the governing body members would have a fiduciary duty to the ACO alone, as required by § 425.106(b)(3), and not to an entity comprised in part by entities that are not ACO participants.

(2) Proposed Revisions

We proposed to clarify our regulation text regarding when an ACO must be formed as a separate legal entity. Specifically, we proposed to remove the reference to ''otherwise independent ACO participants'' in § 425.104(b). The revised regulation would provide that an ACO formed by ''two or more ACO participants, each of which is identified by a unique TIN,'' must be a legal entity separate from any of its ACO participants. For example, if an ACO is composed of three ACO participants, each of whom belongs to the same health system or IPA, the ACO must be a legal entity separate and distinct from any one of the three ACO participants.

In addition, we proposed to clarify § 425.106(a), which sets forth the general requirement that an ACO have an identifiable governing body with the ultimate authority to execute the functions of an ACO. Specifically, we proposed that the governing body must satisfy three criteria. First, the governing body of the ACO must be the same as the governing body of the legal entity that is the ACO. Second, in the case of an ACO that comprises multiple ACO participants, the governing body must be separate and unique to the ACO and must not be the same as the governing body of any ACO participant. Third, the governing body must satisfy all other requirements set forth in § 425.106, including the fiduciary duty requirement. We noted that the second criterion incorporates the requirement that currently appears at § 425.106(b)(4), which provides that the governing body of the ACO must be separate and unique to the ACO in cases where there are multiple ACO participants. Accordingly, we proposed to remove § 425.106(b)(4). We further proposed to remove § 425.106(b)(5), which provides that if an ACO is an existing legal entity, its governing body may be the same as the governing body of that existing entity, provided that it satisfies the other requirements of § 425.106. In light of our proposed revision to § 425.106(a), we believe this provision is unnecessary and should be removed to avoid confusion. In proposing that the governing body be the same as the governing body of the ACO legal entity and that the governing body has ultimate authority to execute the function of the ACO we intended to preclude:

- Delegation of all ACO decision-making authority to a committee of the governing body. We recognize that the governing body of the legal entity that is the ACO may wish to organize committees that address certain matters pertaining to the ACO, but we do not believe that such committees can constitute the governing body of the ACO.
- Retention of ACO decision-making authority by a parent company. We recognize that a parent organization may wish to retain certain authorities to protect the parent company and ensure the subsidiary's success. However, the ACO's governing body must retain the ultimate authority to execute the functions of an ACO. As stated in the regulations, we believe such functions include such things as developing and implementing the required processes under § 425.112 and holding leadership and management accountable for the ACO's activities. We also believe this authority extends to such activities including the appointment and removal of members of the governing body, leadership, and management, and determining how shared savings are used and distributed among ACO participants and ACO providers/suppliers.

The purpose of the new provision precluding the governing body of the ACO from being the same as the governing body of an ACO participant is

to ensure that the interests of individuals and entities other than the ACO do not improperly influence decisions made on behalf of the ACO. In order to comply with the requirement that the governing body be separate and unique to the ACO, it must not be responsible for representing the interests of any entity participating in the ACO or any entity that is not participating in the ACO. Thus, we proposed the requirement that an ACO's governing body must not be the same as the governing body of any of the ACO participants.

Comment: Several commenters noted that an ACO formed by ''two or more ACO participants, each of which is identified by a unique TIN,'' must be a legal entity separate from any of its ACO participants. A commenter indicated that requirement for a separate legal entity with a governing body unaffiliated with the ACO participants creates unnecessary administrative burdens and leads to inconsistencies in the application of policies and procedures that are necessary to manage population health, coordinate care, and control costs.

Some commenters were supportive of the three criteria. A commenter stated that the governance requirements are overly intrusive and that CMS should moderate the proposed requirements to allow providers to use their current structures, rather than requiring them to develop a separate entity and governing body. Some commenters disagreed with the requirement that the ACO governing body retain ultimate authority to care out ACO activities in cases where the ACO has a parent company because they believe this requirement would erode the parent company's ability to protect its own interests.

Response: Section 1899(b)(2)(C) of the Act requires the ACO to have a formal legal structure that allows the organization to receive and distribute shared savings payments to ACO participants and ACO providers/suppliers. As stated in the November 2011 final rule, we continue to believe that the requirement for an ACO to have a legal entity and governing body that is separate from any of the ACO participants that have joined to form the ACO is essential to promote program integrity broadly, including protecting against fraud and abuse, and to ensure the ACO is accountable for its responsibilities under the Shared Savings Program. We do not believe that the formation of a separate legal entity is overly burdensome. The proposal would codify current policy which all participating ACOs have satisfied. Rather than trying to integrate the policies and procedures from multiple participants, the ACO and its governing body (made up and directed by the ACO participants that joined to form the ACO) is in the best position to determine what uniform policies and procedures to apply across the ACO. We note that the legal entities of many ACOs and their governing bodies oversee operations for participation in private payer ACOs in addition to participation in the Shared Savings Program. Shared Savings Program ACOs may do this, so long as their governing bodies meet the fiduciary duty requirements as discussed later. Our proposal was not intended to repudiate our existing policy (and the corollary of proposed § 425.104(b)) that an ACO formed by a single ACO participant need not form a separate legal entity to operate the ACO and is permitted to use its existing governing body, as long as it can meet the other eligibility and governance requirements of the program. We will add a new paragraph (c) at § 425.104 to clarify this point.

As stated in the November 2011 final rule, we believe it is important for the ACO to establish an identifiable governing body that that retains ultimate authority because the ACO is ultimately responsible for its success or failure. The criteria are also important to help insulate against conflicts of interest that could potentially put the interest of an ACO participant or parent company before the interests of the ACO. We note that many ACOs have been developed with the assistance of parent organizations that desire to protect their own interests. However, the parent company's own interests must not interfere with the ACO's ultimate authority and obligation to comply with the requirements of the Shared Savings Program. Nor must those interests interfere with the fiduciary duty of the ACO's governing body as discussed later in this section. Therefore, we will finalize the proposed criteria. However, in response to the commenters, we will clarify the regulation text at § 425.106(a)(2)(ii) to provide that, the governing body of an ACO formed by a single ACO participant would be the governing body of the ACO participant.

FINAL ACTION: We are finalizing our proposal to remove the reference to ''otherwise independent ACO participants'' in § 425.104(b). The revised regulation would provide that an ACO formed by ''two or more ACO participants, each of which is identified by a unique TIN,'' must be a legal entity separate from any of its ACO participants. In response to the commenters, we are adding new § 425.104(c) to clarify that an ACO formed by a single ACO participant may use its existing legal entity and governing body, provided it satisfies the other requirements in §§ 425.104 and 425.106. Additionally, we are finalizing at § 425.106(a)(2) our proposal that the governing body must satisfy three criteria: First, the governing body of the ACO must be the same as the governing body of the legal entity that is the ACO. Second, in the case of an ACO that comprises multiple ACO participants the governing body must be separate and unique to the ACO, except as provided in § 425.104(c). Third, the governing body must satisfy all other requirements set forth in § 425.106, including the fiduciary duty requirement. We are finalizing our proposal to remove §§ 425.106(b)(4) and (5).

b. Fiduciary Duties of Governing Body Members

(1) Overview

Our current regulations at § 425.106(b)(3) require that the governing body members have a fiduciary duty to the ACO and must act consistent with that duty. We have clarified in guidance that the governing body members cannot meet the fiduciary duty requirement if the governing body is also responsible for governing the activities of individuals or entities that are not part of the ACO (See ''Additional Guidance for Medicare Shared Savings Program Accountable Care Organization (ACO) Applicants'' located online at *http://www.cms.gov/Medicare/Medicare-Fee-for-Service-Payment/sharedsavingsprogram/Downloads/Memo_Additional_Guidance_on_ACO_Participants.pdf*). For example, in the case of an IPA that applies as an ACO to the Shared Savings Program, we believe it would be difficult for the members of the IPA's governing body to make decisions in the best interests of the ACO if only some of the group practices that compose the IPA are ACO participants; decisions affecting the ACO may be improperly influenced by the interests of group practices that are part of the IPA but are not ACO participants. For this reason, our regulations require the IPA to establish the ACO as a separate legal entity. This new legal entity must have a governing body whose members have a fiduciary responsibility to the ACO alone and not to any other individual or entity.

(2) Proposed Revisions

We proposed to clarify in § 425.106(b)(3) that the fiduciary duty owed to an ACO by its governing body

members includes the duty of loyalty. The purpose of the proposal was to emphasize that the ACO's governing body decisions must be free from the influence of interests that may conflict with the ACO's interests. This proposal does not represent a change in policy and is simply intended to underscore that members of an ACO governing body must not have divided loyalties; they must act only in the best interests of the ACO and not another individual or entity, including the individual interests of ACO participants, ACO professionals, ACO providers/suppliers, or other individuals or entities.

Comment: Several commenters expressed specific support for the concept that the fiduciary duty owed to an ACO by its governing body members includes the duty of loyalty. A commenter recommended clarification that the requirement would not preclude members of the governing body from participating either on governing bodies or in senior management roles of other organizations.

Response: We appreciate the comments received on our proposal to include the duty of loyalty as one of the fiduciary duties owed to the ACO by the members of its governing body. We believe that it is possible for members of the ACO's governing body to hold similar leadership positions in other organizations. However, when acting on behalf of the ACO, each governing body member must act in the best interests of the ACO. We note that the ACO governing body is required under § 425.106(d) to have a conflict of interest policy that requires each member of the governing body to disclose relevant financial interests, provide a procedure for determining whether a conflict of interest exists and set forth a process to address any conflicts that arise. Additionally, the conflict of interest policy must address remedial action for members of the governing body that fail to comply with the policy. We believe this safeguard can ensure that governing body members act with a duty of loyalty.

FINAL ACTION: We will finalize our proposal to clarify at § 425.106(b)(3) that the fiduciary duty owed to an ACO by its governing body members includes the duty of loyalty.

c. Composition of the Governing Body

(1) Overview

Section 1899(b)(1) of the Act requires an ACO to have a ''mechanism for shared governance'' among ACO participants. Section 425.106(c)(1) of the regulations requires an ACO to provide for meaningful participation in the composition and control of the ACO's governing body for ACO participants or their designated representatives. As we explained in the November 2011 final rule (76 FR 67819), we believe that an ACO should be operated and directed by Medicare-enrolled entities that directly provide health care services to beneficiaries. However, we acknowledged that small groups of providers often lack both the capital and infrastructure necessary to form an ACO and to administer the programmatic requirements of the Shared Savings Program and could benefit from partnerships with non-Medicare enrolled entities. For this reason, we proposed (76 FR 19541) that to be eligible for participation in the Shared Savings Program, the ACO participants must have at least 75 percent control of the ACO's governing body. In the November 2011 final rule, we explained that this requirement would ensure that ACOs remain provider-driven, but also leave room for non-providers to participate in the program.

In addition, to provide for patient involvement in the ACO governing process, we specified at § 425.106(c)(2) that an ACO's governing body must include a Medicare beneficiary served by the ACO who does not have a conflict of interest with the ACO. We acknowledged in the November 2011 final rule that beneficiary representation on an ACO's governing body might not always be feasible. For example, commenters raised concerns that requiring a beneficiary on the governing body could conflict with state corporate practice of medicine laws or other local laws regarding governing body requirements for public health or higher education institutions (76 FR 67821). As a result, we believe it was appropriate to provide some flexibility for us to permit an ACO to adopt an alternative structure for its governing body, while still ensuring that ACO participants and Medicare FFS beneficiaries are involved in ACO governance.

Accordingly, our existing regulations offer some flexibility to permit an ACO to participate in the Shared Savings Program even if its governing body fails to include a beneficiary or satisfy the requirement that 75 percent of the governing body be controlled by ACO participants. Specifically, § 425.106(c)(5) provides that if an ACO's governing body does not meet either the 75 percent threshold or the requirement regarding beneficiary representation, it must describe in its application how the proposed structure of its governing body would involve ACO participants in innovative ways in ACO governance or provide a meaningful opportunity for beneficiaries to participate in the governance of the ACO. For example, under this provision, we anticipated that exceptions might be needed for ACOs that operate in states with Corporate Practice of Medicine restrictions to structure beneficiary representation accordingly. We contemplated that this provision could also be used by an existing entity to explain why it should not be required to reconfigure its board if it had other means of addressing the requirement to include a consumer perspective in governance (see 76 FR 67821).

(2) Proposed Revisions

We proposed to revise § 425.106(c)(1) to state the statutory standard in section 1899(b)(1) of the Act requiring an ACO to have a ''mechanism for shared governance'' among ACO participants. Although in the November 2011 final rule we did not announce a requirement that each ACO participant be a member of the ACO's governing body (76 FR 67818), the governing body must represent a mechanism for shared governance among ACO participants. Therefore, the governing body of an ACO that is composed of more than one ACO participant should not, for example, include representatives from only one ACO participant. For ACOs that have extensive ACO participant lists, we would expect to see representatives from many different ACO participants on the governing body. Our proposal to state the statutory standard for shared governance in our regulations at § 425.106(c)(1) does not constitute a substantive change to the program.

We also proposed to revise § 425.106(c)(2) to explicitly prohibit an ACO provider/supplier from being the beneficiary representative on the governing body. Some ACO applicants have proposed that one of their ACO providers/suppliers would serve as the beneficiary representative on the governing body. We believe it would be very difficult for an ACO provider/supplier who is a Medicare beneficiary to represent only the interests of beneficiaries, rather than his or her own interests as an ACO provider/supplier, the interests of other ACO providers/suppliers, or the interests of the ACO participant through which he or she bills Medicare.

We proposed to revise § 425.106(c)(5) to remove the flexibility for ACOs to deviate from the requirement that at least 75 percent control of an ACO's governing body must be held by ACO participants. Based on our experience to date with implementing the program,

we have learned that ACO applicants do not have difficulty meeting the requirement under § 425.106(c)(3) that ACO participants maintain 75 percent control of the governing body. We have not denied participation to any ACO applicants solely on the basis of failure to comply with this requirement, and it has not been necessary to grant any exceptions to this rule under § 425.106(c)(5). To the contrary, we have found the 75 percent control requirement to be necessary and protective of the ACO participant's interests. Accordingly, we believe there is no reason to continue to offer an exception to the rule.

We believe that it is important to maintain the flexibility for ACOs to request innovative ways to provide meaningful representation of Medicare beneficiaries on ACO governing bodies. Based on our experience, some ACOs have been unable to include a beneficiary on their governing body, and these entities have used the process under § 425.106(c)(5) to establish that they satisfy the requirement for meaningful beneficiary representation through the use of patient advisory bodies that report to the governing body of the ACO.

Comment: We received a few comments in support of our proposal to revise § 425.106(c)(5) to remove the flexibility for ACOs to deviate from the requirement that at least 75 percent control of an ACO's governing body must be held by ACO participants. However, several commenters recommended retention of this flexibility. The commenters opposed to its removal stated that such flexibility, although not currently used or required, could be necessary for future applicants. A commenter noted that true decision-making by an ACO governing body that broadly represents ACO participants could be achieved in a number of ways.

Response: As stated in the November 2011 final rule, we believe the 75-percent control requirement is necessary to ensure that ACOs are provider driven. Therefore, we finalized this requirement but permitted an exception in case there were state laws or other impediments that would limit an ACO's ability to comply with it. However, our experience over several application cycles has demonstrated that stakeholder concern over conflicts with laws governing the composition of tax-exempt or state-licensed entities does not appear to have been a factor in the ability of ACOs to comply with this requirement. Moreover, our experience to date leads us to conclude that this requirement ensures that the ACO participants who have joined to form the ACO have direct and primary influence and input on the required functions of the ACO, rather than external third parties. However, given that the program is still in the early stages of implementation and our relatively limited experience with ACOs in two-sided risk tracks, we will retain the flexibility for an ACO to request an exception to the 75-percent control requirement. We anticipate permitting such exceptions only in very limited circumstances (for example, when the ACO demonstrates that it is unable to comply because of a conflict with other laws).

Comment: Several commenters agreed with our proposed revision to § 425.106(c)(2) to explicitly prohibit an ACO provider/supplier from being the beneficiary representative on the governing body. A commenter stated that CMS to strengthen the requirements for meaningful involvement of consumer/beneficiary representatives increase the number of beneficiaries on the governing body and to exercise greater oversight to ensure the success of beneficiary engagement efforts. Several commenters offered additional suggestions for members of the governing body, including requiring the ACO to involve patient/family representatives on ACO quality and safety improvement committees or considering a requirement that consumer advocates, employers, labor organizations and other community organizations or ''other entities'' (such as post-acute care providers) be represented on the governing body. A commenter opposed the flexibility afforded under § 425.106(c)(5) for the ACO to differ from the requirement to have a beneficiary on the governing body stating that this section creates a loophole for ACOs to avoid the requirement. In addition, this commenter further suggested that all ACO applications should be required to include details regarding how the ACO intends to involve Medicare beneficiaries in innovative and meaningful ways that enhance patient engagement and coordination of care.

Response: We appreciate the comments received on this proposal. As stated in the November 2011 final rule (FR 76 67821), we believe that a focus on the beneficiary in all facets of ACO governance are critical for ACOs to achieve the three-part aim and believe that beneficiary representation is important. Therefore, we continue to encourage ACOs to consider seriously how to provide opportunities for beneficiaries and others to be involved in ACO governance through both governing body representation and other appropriate mechanisms. However, as articulated in the November 2011 final rule, we believe our current regulations balance our overall objectives for the program while permitting ACOs flexibility to structure their governing bodies appropriately; therefore, we are unable to incorporate suggestions to increase the beneficiary representation requirement and suggestions for governing body representation of other consumer or provider entities.

As we noted in the November 2011 final rule, we recognize there may be state corporate practice of medicine laws or other reasons why it may not be feasible for a beneficiary to be represented on the ACO's governing body and therefore finalized a policy that permits an ACO to apply for an exception to the rule that an ACO must have a beneficiary on the governing body. Very few of these exceptions have been granted to date. In these few cases, ACOs have developed patient advisory committees that report directly to the ACO's governing body. ACOs have reported that such a committee can have a very strong influence on governing body decisions and involve more beneficiary voices than would have otherwise been able by having a single beneficiary on the governing body. Therefore, we believe it is important to continue to permit flexibility for ACOs to deviate from this requirement.

FINAL ACTION: Because we received no comments on our proposed revision to § 425.106(c)(1), we are finalizing our proposal to modify that provision to state the statutory standard in section 1899(b)(1) of the Act, which requires an ACO to have a ''mechanism for shared governance'' among ACO participants. We are also finalizing our proposed revision at § 425.106(c)(2) to explicitly prohibit an ACO provider/supplier from being the beneficiary representative on the governing body.

We are not finalizing our proposal to remove § 425.106(c)(5), which offers flexibility for ACOs to deviate from the requirement that ACO participants must hold at least 75 percent control of an ACO's governing body. However, we note that we anticipate permitting such exceptions only in very limited circumstances. We may revisit this issue in future rulemaking.

7. Leadership and Management Structure

a. Overview

Section 1899(b)(2)(F) of the Act requires an eligible ACO to ''have in place a leadership and management structure that includes clinical and administrative systems.'' Under this

authority, we incorporated certain leadership and management requirements into the Shared Savings Program, as part of the eligibility requirements for program participation. In the November 2011 final rule (76 FR 67822), we stated that an ACO's leadership and management structure should align with and support the goals of the Shared Savings Program and the three-part aim of better care for individuals, better health for populations, and lower growth in expenditures.

In the November 2011 final rule (76 FR 67825), we established the requirement that the ACO's operations be managed by an executive, officer, manager, general partner, or similar party whose appointment and removal are under the control of the ACO's governing body and whose leadership team has demonstrated the ability to influence or direct clinical practice to improve efficiency, processes, and outcomes (see § 425.108(b)). In addition, under § 425.108(c), clinical management and oversight must be managed by a senior-level medical director who is one of the ACO providers/suppliers, who is physically present on a regular basis in an established ACO location (clinic, office or other location participating in the ACO), and who is a board-certified physician licensed in a state in which the ACO operates. In § 425.204(c)(1)(iii), we require ACO applicants to submit materials documenting the ACO's organization and management structure, including senior administrative and clinical leaders specified in § 425.108.

In the November 2011 final rule (76 FR 67825), we provided flexibility for ACOs to request an exception to the leadership and management requirements set forth under § 425.108(b) and (c). We believe that affording this flexibility was appropriate in order to encourage innovation in ACO leadership and management structures. In accordance with § 425.108(e), we may give consideration to an innovative ACO leadership and management structure that does not comply with the requirements of § 425.108(b) and (c).

We stated in the proposed rule that we continued to believe that having these key leaders (operational manager and clinical medical director) is necessary for a well-functioning and clinically integrated ACO. We noted that after four application cycles, it appeared that ACO applicants do not have difficulty in meeting the operational manager and clinical medical director requirements. Only one ACO had requested an exception to the medical director requirements. In that case, the ACO sought the exception in order to allow a physician, who had retired after a long tenure with the organization to serve as the medical director of the ACO. We approved this request because, although the retired physician was not an ACO provider/supplier because the retired physician was no longer billing for physician services furnished during the agreement period, he was closely associated with the clinical operations of the ACO, familiar with the ACO's organizational culture, and dedicated to this one ACO.

In addition, we noted that we had received a number of questions from ACO applicants regarding the other types of roles for which CMS requires documentation under § 425.204(c)(1)(iii) to evaluate whether an applicant has a ''. . . leadership and management structure that includes clinical and administrative systems'' that support the purposes of the Shared Savings Program and the aims of better care for individuals, better health for populations, and lower growth in expenditures, as articulated at § 425.108(a)). We stated that in response to such inquiries we considered an ACO's ''. . . leadership and management structure that includes clinical and administrative systems'' to be composed of the operational manager and clinical medical director (referenced under § 425.108(b) and (c)) as well as the qualified healthcare professional that is required under § 425.112(a) to be responsible for the ACO's quality assurance and improvement program.

b. Proposed Revisions

We proposed to amend § 425.108 to provide some additional flexibility regarding the qualifications of the ACO medical director and to eliminate the provision permitting some ACOs to enter the program without satisfying the requirements at § 425.108(b) and (c) for operations and clinical management. In addition, we proposed to amend § 425.204(c)(iii) to clarify that applicants must submit materials regarding the qualified health care professional responsible for the ACO's quality assurance and improvement program.

We stated our belief that it was appropriate to amend the medical director requirement at § 425.108(c) to allow some additional flexibility. Specifically, we proposed to remove the requirement that the medical director be an ACO provider/supplier. This change would permit an ACO to have a medical director who was, for example, previously closely associated with an ACO participant but who is not an ACO provider/supplier because he or she does not bill through the TIN of an ACO participant and is not on the list of ACO providers/suppliers. Alternatively, we considered retaining the requirement that an ACO's medical director be an ACO provider/supplier, but permitting ACOs to request CMS approval to designate as its medical director a physician who is not an ACO provider/supplier but who is closely associated with the ACO and satisfies all of the other medical director requirements. We sought comment on whether an ACO medical director who is not an ACO provider/supplier must have been closely associated with the ACO or an ACO participant in the recent past. In addition, we proposed to clarify that the medical director must be physically present on a regular basis ''at any clinic, office, or other location of the ACO, an ACO participant or an ACO provider/supplier.'' Currently, the provision incorrectly refers only to locations ''participating in the ACO.''

However, we stated we continued to believe that the medical director of the ACO should be directly associated with the ACO's clinical operations and familiar with the ACO's organizational culture. We noted that this is one purpose of the provision requiring medical directors to be physically present on a regular basis at any clinic, office, or other ACO location. A close working relationship with the ACO and its clinical operations is necessary in order for the medical director to lead the ACO's efforts to achieve quality improvement and cost efficiencies.

Additionally, we proposed to eliminate § 425.108(e), which permits us to approve applications from innovative ACOs that do not satisfy the leadership and management requirements related to operations management and clinical management and oversight set forth at § 425.108(b) and (c). Based on our experience with the program and the proposed change to the medical director requirement, we stated our belief that it was unnecessary to continue to allow ACOs the flexibility to request an exception to the leadership and management requirements related to operations management and clinical management and oversight (§ 425.108(b) and (c)). We noted that these requirements are broad and flexible and have not posed a barrier to participation in the Shared Savings Program; in fact, in only one instance has an ACO requested an exception to the operations management criterion (§ 425.108(b)). We were unaware of any alternative operations management structure that might be considered acceptable, and we proposed to modify § 425.108(c) to accommodate the one exception we

have granted to date. Accordingly, we proposed to revise the regulations by striking § 425.108(e) to eliminate the flexibility for ACOs to request an exception to the leadership and management requirements at § 425.108(b) and (c).

Finally, to clarify questions that have been raised by ACO applicants and to reduce the need for application corrections, we proposed to modify § 425.204(c)(1)(iii) to require a Shared Savings Program applicant to submit documentation regarding the qualified healthcare professional responsible for the ACO's quality assurance and improvement program (as required by § 425.112(a)).

We sought comment on these changes to the requirements for ACO leadership and management.

Comment: Many commenters supported our proposal revision to § 425.108(c) to permit more flexibility for the medical director of an ACO. These commenters stated that a medical director should not be limited to being a current ACO provider/supplier because the ACO should have flexibility to conduct a nationwide search for the best candidate. Moreover, these commenters noted that many potentially qualified physicians have navigated away from patient care toward more administrative activities, thereby developing expertise in areas desirable in a medical director and necessary for ACO success. However, several commenters opposed the proposal to introduce flexibility. These commenters believe that a successful ACO medical director is one who is directly associated with the clinical operations of the ACO and familiar with its organizational culture, or should otherwise be able to provide direct patient care.

A few commenters urged CMS to allow even more flexibility than what was proposed. These commenters suggested alternative criteria for qualifications of the medical director. For example, some commenters suggested that we permit the medical director position to be filled by individuals other than physicians, such as an advance practice nurse or other qualified health professional.

Response: As stated in the November 2011 final rule, we believe physician leadership of clinical management and oversight is important to the ACO's ability to achieve the three-part aim. We agree with commenters who indicate that flexibility may be necessary for the ACO to select the best qualified physician for this role. We also agree with commenters that the best physician for the role of medical director may be one who has an intimate knowledge of the ACO's organizational culture or who is actively implementing (through direct patient care activities) the clinical processes established by the ACO. We believe it is important to ensure that the medical director is familiar with the day-to-day operations of the ACO. We believe our proposals balanced these perspectives by eliminating the requirement that the medical director be an ACO provider/supplier while also clarifying the requirement that the medical director be physically present on a regular basis ''at any clinic, office, or other location of the ACO, ACO participant or ACO provider/supplier.'' We will therefore finalize the modifications as proposed and permit ACOs to choose a medical director who best suits the ACO's goals and needs.

We appreciate additional suggestions for modifications in the criteria for the ACO's medical director and will keep them in mind in future rulemaking. Specifically, we appreciate the comments suggesting that the medical director could be any qualified health professional. We will not modify our requirements for the medical director in this manner because ACOs report that physician leadership is an important key to the success of the ACO. Additionally, the ACO is required to have a qualified healthcare professional responsible for the ACO's quality assurance and improvement program, in addition to the medical director and may choose to appoint non-physician clinical leaders to this role. We discuss modifications to this requirement later in this section.

Comment: A number of commenters provided feedback on the proposed elimination of § 425.108(e), which permits CMS to approve applications from innovative ACOs that do not satisfy the leadership and management requirements related to operations management and clinical management and oversight set forth at § 425.108(b) and (c). A commenter supported the removal of this provision, although other commenters suggested this flexibility could be necessary for future applicants for the program.

Response: In the November 2011 final rule, we finalized a policy in which CMS retained the right to give consideration to innovative ACOs that did not include: (1) operations managed by an executive, officer, manager, general partner, or similar party; and (2) clinical management and oversight by a senior-level medical director. Given our experience with the program, the additional flexibility provided in this final rule regarding the medical director qualifications, and the fact that these requirements are already so broad and flexible, we do not believe that any additional flexibility is necessary or even possible. Therefore, we are finalizing our proposal to eliminate § 425.108(e). As noted previously, we clarified that we consider the qualified health professional referenced in § 425.112(a) to be part of the ACO's leadership and management team and as such, we proposed to modify § 425.204(c)(1)(iii) to require a Shared Savings Program applicant to submit documentation regarding this person, if the role is not filled by the medical director.

Comment: Some commenters agreed with CMS' proposal and requested that CMS consider providing more guidance that would describe suitable training, experience, and knowledge for how to run an effective quality assurance and improvement program. Other commenters disagreed with our proposal, stating that CMS should not require documentation of the qualifications of such a professional.

Response: We believe it is important for the ACO to include a person within its clinical leadership team that is directly responsible for the ACO's quality assurance and improvement program. This person, as discussed in the November 2011 final rule, may be a physician or any other qualified health professional. We clarify that this role may be filled by the ACO's medical director. Currently, in the ACO's application to the Shared Savings Program, we request certain information about the ACO's organization and management structure. Because the quality assurance and improvement program is integral to the ACO's ability to meet participation requirements, we also believe the healthcare professional responsible for it must be considered a part of the ACO's clinical leadership. Therefore, we are finalizing our proposal that the ACO submit information about this person as part of its application to the program.

FINAL ACTION: We are finalizing, as proposed, our policies related to the ACO's leadership and management. Specifically, we are amending § 425.108 to provide some additional flexibility regarding the qualifications of the ACO medical director and to eliminate the provision permitting ACOs to request consideration to enter the program without satisfying the requirements at § 425.108(b) and (c) for operations and clinical management. In addition, we are amending § 425.204(c)(iii) to require that applicants must submit materials at the time of application regarding the ACO's leadership and management team, including the qualified health care

professional responsible for the ACO's quality assurance and improvement program.

8. Required Process To Coordinate Care

a. Overview

Section 1899(b)(2)(G) of the Act requires an ACO to ''define processes to . . . coordinate care, such as through the use of telehealth, remote patient monitoring, and other such enabling technologies.'' In the November 2011 final rule (76 FR 67829 through 67830), we established requirements under § 425.112(b)(4) that ACOs define their care coordination processes across and among primary care physicians, specialists, and acute and post-acute providers. As part of this requirement, an ACO must define its methods and processes to coordinate care throughout an episode of care and during its transitions. In its application to participate in the Shared Savings Program, the ACO must submit a description of its individualized care program, along with a sample care plan, and explain how this program is used to promote improved outcomes for, at a minimum, its high-risk and multiple chronic condition patients. In addition, an ACO's application must describe target populations that would benefit from individualized care plans.

In developing these policies for the November 2011 final rule (76 FR 67819), we received comments acknowledging that requiring ACOs to define processes to promote coordination of care is vital to the success of the Shared Savings Program. Commenters stressed the importance of health information exchanges in coordination of care activities and recommended that CMS allow ACOs the flexibility to use any standards-based electronic care coordination tools that meet their needs. Other commenters suggested that the proposed rule anticipated a level of functional health information exchange and technology adoption that may be too aggressive.

As stated in § 425.204(c)(1)(ii), applicants to the Shared Savings Program must provide a description, or documents sufficient to describe, how the ACO will implement the required processes and patient-centeredness criteria under § 425.112, including descriptions of the remedial processes and penalties (including the potential for expulsion) that will apply if an ACO participant or an ACO provider/supplier fails to comply with and implement these processes. Under § 425.112(b), an ACO must establish processes to accomplish the following:

- Promote evidence-based medicine.
- Promote patient engagement.
- Develop an infrastructure to internally report on quality and cost metrics required for monitoring and feedback.
- Coordinate care across and among primary care physicians, specialists and acute and post-acute providers and suppliers.

In addition to the processes described previously, we believe it is important for applicants to explain how they will develop the health information technology tools and infrastructure to accomplish care coordination across and among physicians and providers Adoption of health information technology is important for supporting care coordination by ACO participants and other providers outside the ACO in the following ways:

- Secure, private sharing of patient information.
- Reporting on quality data and aggregating data across providers and sites to track quality measures.
- Deploying clinical decision support tools that provide access to alerts and evidence based-guidelines.

As ACOs establish more mature processes for risk management, information technology infrastructure allows ACOs and providers to conduct robust financial management of beneficiary populations, deliver cost and quality feedback reporting to individual providers, and streamline the administration of risk based contracts across multiple payers. We believe that requiring ACOs to address health information technology infrastructure in their application to the Shared Savings program would support more careful planning and increased focus on this issue.

b. Accelerating Health Information Exchange

We believe all patients, their families, and their healthcare providers should have consistent and timely access to their health information in a standardized format that can be securely exchanged between the patient, providers, and others involved in the patient's care. (HHS August 2013 Statement, ''Principles and Strategies for Accelerating Health Information Exchange'') HHS is committed to accelerating health information exchange (HIE) through the use of EHRs and other types of health information technology (HIT) across the broader care continuum through a number of initiatives including—

- Establishing a coordinated governance framework and process for nationwide health IT interoperability;
- Improving technical standards and implementation guidance for sharing and using a common clinical data set;
- Enhancing incentives for sharing electronic health information according to common technical standards, starting with a common clinical data set; and
- Clarifying privacy and security requirements that enable interoperability. These initiatives are designed to encourage HIE among health care providers, including professionals and hospitals eligible for the Medicare and Medicaid EHR Incentive Programs and those ineligible for such programs to improve care delivery and coordination across the entire care continuum.

For example, the Transition of Care Measure #2 in Stage 2 of the Medicare and Medicaid EHR Incentive Programs requires HIE to share summary records for at least 10 percent of care transitions. Most recently, the Office of the National Coordinator for Health Information Technology (ONC) released a document entitled ''Connecting Health and Care for the Nation: A Shared Nationwide Interoperability Roadmap'' (available at *http://www.healthit.gov/sites/default/files/nationwide-interoperability-roadmap-draft-version-1.0.pdf*) which further describes a shared agenda for achieving interoperability across the current health IT landscape. In the near term, the Roadmap focuses on actions that will enable a majority of individuals and providers across the care continuum to send, receive, find and use a common set of electronic clinical information at the nationwide level by the end of 2017.

We believe that HIE and the use of certified EHRs can effectively and efficiently help ACOs and participating providers improve internal care delivery practices, support management of patient care across the continuum, and support the reporting of electronically specified clinical quality measures (eCQMs).

c. Proposed Revisions

In the proposed rule, we continue to believe that ACOs should coordinate care between all types of providers and across all services, and that the secure, electronic exchange of health information across all providers and suppliers is of the utmost importance for both effective care coordination activities and the success of the Shared Savings Program. We clarify that such care coordination could include coordination with community-based organizations that provide services that address social determinants of health. We understand that ACOs will differ in their ability to adopt the appropriate

health information exchange technologies, but we continued to underscore the importance of robust health information exchange tools in effective care coordination.

In the proposed rule, ACOs have reported how important access to real time data is for providers to improve care coordination across all sites of care, including outpatient, acute, and post-acute sites of care. We believe that providers across the continuum of care are essential partners to primary care physicians in the management of patient care. ACOs participating in the program indicate that they are actively developing the necessary infrastructure and have been encouraging the use of technologies that enable real time data sharing among and between sites of care. We believe having a process and plan in place to coordinate a beneficiary's care by electronically sharing health information improves care, and that this helps all clinicians involved in the care of a patient to securely access the necessary health information in a timely manner. It also can also be used to engage beneficiaries in their own care. We further believe that Shared Savings Program applicants should provide, as part of the application, their plans for improving care coordination by developing, encouraging, and using enabling technologies and electronic health records to make health information electronically available to all practitioners involved in a beneficiary's care.

Therefore, we proposed to add a new requirement to the eligibility requirements under § 425.112(b)(4)(ii)(C) which would require an ACO to describe in its application how it will encourage and promote the use of enabling technologies for improving care coordination for beneficiaries. Such enabling technologies and services may include electronic health records and other health IT tools (such as population health management and data aggregation and analytic tools), telehealth services (including remote patient monitoring), health information exchange services, or other electronic tools to engage patients in their care. We also proposed to add a new provision at § 425.112(b)(4)(ii)(D) to require the applicant to describe how the ACO intends to partner with long-term and post-acute care providers to improve care coordination for the ACO's assigned beneficiaries. Finally, we proposed to add a provision under § 425.112(b)(4)(ii)(E) to require that an ACO define and submit major milestones or performance targets it will use in each performance year to assess the progress of its ACO participants in implementing the elements required under § 425.112(b)(4). For instance, providers would be required to submit milestones and targets such as: Projected dates for implementation of an electronic quality reporting infrastructure for participants; the number of providers expected to be connected to health information exchange services by year; or the projected dates for implementing elements of their care coordination approach, such as alert notifications on emergency department and hospital visits or e-care plan tools for virtual care teams. We believe this information would allow us to better understand and support ACOs' plans to put into place the systems and processes needed to deliver high quality care to beneficiaries.

We also noted that ACOs have flexibility to use telehealth services, as they deem appropriate for their efforts to improve care and avoid unnecessary costs. Some ACOs have already reported that they are actively using telehealth services to improve care for their beneficiaries. We welcomed information from ACOs and other stakeholders about the use of such technologies. We sought comment on the specific services and functions of this technology that might be appropriately adopted by ACOs. For example, do the use of telehealth services and other technologies necessitate any additional protections for beneficiaries? Are these technologies necessary for care coordination or could other methods be used for care coordination? If a particular technology is necessary, under what circumstances?

Comment: Several commenters supported our proposed new provision at § 425.112(b)(4)(ii)(D) to require the applicant to describe how the ACO intends to partner with long-term and post-acute care providers to improve care coordination for the ACO's assigned beneficiaries. A commenter noted that recent studies have established that use of post-acute care contributes to the most variation in expenditures for Medicare beneficiaries. Another commenter suggested that CMS evaluate whether the requirement for ACOs to define a process to promote care coordination is sufficiently patient-centered.

Commenters also stated that post-acute care should include both community-based and facility-based long-term services and other supporting practitioners. Several commenters noted their belief that primary care physicians are the key to improving care coordination. A commenter noted that nurse practitioners play a contributing role in the implementation of care coordination activities across ACO professionals within the ACO. A few commenters recommended that CMS create an additional requirement for ACOs to describe how it will provide beneficiaries with palliative care services.

A few commenters disagreed with the addition of any requirements, stating that they believe this requirement would add administrative burden to ACOs and distract from coordination of care. A commenter opposed care coordination requirements and the current requirement at § 425.112(a)(3)(i) for ACOs to outline remedial processes and penalties that would apply for provider non-compliance and suggested CMS eliminate them.

Response: We appreciate the broad support for the program rules requiring ACOs to develop a process to promote patient-centered care coordination, including the requirements for the ACO to define this process across sites of care. We believe that our current rules place a strong emphasis on patient-centeredness and refer the reader to the November 2011 proposed and final rules for a more fulsome discussion of this important issue. Our current rules require ACOs to define, establish, implement, evaluate, and periodically update its care processes, including its process to coordinate care across and among primary care physicians, specialists, and acute and post-acute providers and suppliers. When engaging beneficiaries and in shared decision-making, the ACO must take into account the beneficiaries' unique needs, preferences, values, and priorities. Individualized care plans must take into account community resources available to the individual. Therefore, we believe that the ACO's care coordination efforts could include both community-based and facility-based long-term services and other supporting practitioners. Furthermore, we agree that primary care practitioners are central to the ACO's efforts to improve care coordination for the assigned beneficiary population and that many clinical and administrative personnel, including nurse practitioners and other non-physician practitioners, play an important contributing role in the implementation of care coordination activities for the ACO. Our rules at § 425.112(a)(3)(i) require each ACO to explain how it will require ACO participants and ACO providers/suppliers to comply with and implement each process (and all sub-elements of each process), including remedial processes and penalties (including the potential for expulsion)

applicable to ACO participant and ACO providers/suppliers for failure to comply with their implementation. We believe this is necessary because the processes are so integral to ACO participation and the mission of an ACO. We believe that compliance with these processes can indicate whether an ACO participant or ACO provider/supplier has made a meaningful commitment to the mission and success of the ACO.

We are not including other specific requirements at this time because we believe ACOs should have flexibility within the current rules to define care processes that are appropriate for their unique patient population. Therefore, we are finalizing the proposed policy without change.

Comment: Many commenters supported our proposed revision to add a new eligibility requirement under § 425.112(b)(4)(ii)(C) which would require an ACO to describe in its application how it will encourage and promote the use of enabling technologies for improving care coordination for beneficiaries. Commenters specifically encouraged CMS to require ACOs to use specific technologies such as EHRs, image sharing, mobile devices, electronic access for beneficiaries, HIT-enabled monitoring of performance on patient-reported outcomes, and remote patient monitoring. A commenter suggested requiring ACOs to give beneficiaries the ability to view, download, and transmit their health information in a manner consistent with Meaningful Use requirements. Supporters suggested modifications to the proposed provision such as recognizing that care coordination tools may be part of EHR functionality that care coordination tools may include innovative electronic care coordination applications, or that care coordination tools can be designed to assist both providers and beneficiaries. A commenter recommended that use of EHRs be a requirement for participation in the program, rather than a description in the application. Several commenters offered specific suggestions, such as requiring inpatient facilities to notify a patient's primary care provider immediately upon presentation to the emergency department, prior to admission, and on a daily basis when the patient has been admitted. A commenter recommended that CMS require ACOs to describe how it would use enabling technologies to engage patients. Another commenter encouraged CMS to consider the cultural needs, health literacy, and technological literacy of the community as components in the promotion of enabling technologies. A commenter suggested CMS support transparency by evaluating and reporting on the best enabling technology outcomes to encourage ACO adoption of best practices. Another commenter made the statement that to enhance patient engagement and caregiver engagement of care, patient-facing information and communication platforms should be accessible to those with visual, hearing, cognitive, and communication impairments.

Several commenters raised concerns about the proposal stating that ACOs should have flexibility to work with their participating physicians and other health professionals on how best to deploy technology in a manner that drives efficiency and quality improvement. These commenters viewed the proposed policy as overly restrictive and a deterrent to the development of innovative enabling technologies. Some commenters agreed that health IT is a critical component of ACO success, but warned that a requirement such as this would just increase ACO burden and not ensure that health IT would actually be used effectively to transform care, in other words, enabling technologies should be understood as a means for care coordination and not an end unto itself. Commenters also raised a concern about the costs of such technologies and suggested CMS offer financial awards or bonuses to ACOs to defray the costs of acquiring technologies or hiring care coordinators to better implement care coordination processes.

Response: We appreciate the support of those that recognize the importance of encouraging ACO adoption of enabling technologies to improve care coordination. We agree that enabling technologies should be adopted thoughtfully with the goal of improving care, and not just adoption for its own sake. We are not finalizing additional specific requirements because we agree with commenters that ACOs should have flexibility to define their care coordination processes and use of enabling technologies. We believe this flexibility can encourage innovative methods of engaging both beneficiaries and providers in the coordination of a patient's care. ACOs should also have flexibility because of differences in the rate of adoption of enabling technologies, cultural needs and health literacy of the ACO's population. Additionally, we believe this flexibility is needed because it is too early in the adoption of enabling technologies to determine what processes or technologies produce the best outcomes for patients. We therefore disagree with commenters that view the proposal as overly restrictive. As use of such technologies becomes more established, best practices may emerge in the future which CMS may consider. While we encourage ACO efforts to improve care coordination throughout episodes of care and during care transitions, we agree with commenters that additional requirements on providers would be burdensome. Therefore, at this time to we will not require inpatient facilities to notify primary care providers of emergency room visits or admissions. However, we note that inpatient facilities have an interest in coordinating the care of beneficiaries to reduce avoidable admissions and encourage ACOs to develop relationships with local hospitals to improve these transitions.

We continue to believe ACOs should coordinate care between all types of providers and suppliers across all services, and secure, electronic exchange of health information across all providers in a community is of the utmost importance for both effective care coordination activities and the success of the Shared Savings Program. We believe having a process and plan in place to coordinate a beneficiary's care by electronically sharing health information improves care, and that this helps all clinicians involved in the care of a patient to securely access the necessary health information in a timely manner. We further believe that Shared Savings Program applicants should provide, as part of the application, their plans for improving care coordination by developing, encouraging, and using enabling technologies and electronic health records to make health information electronically available to all practitioners involved in a beneficiary's care, both within the ACO and with other practitioners and sites of care outside of the ACO involved in the care of a beneficiary. Therefore, we are finalizing our proposal to add a new requirement to the eligibility requirements under § 425.112(b)(4)(ii)(C) which will require an ACO to describe in its application how it will encourage and promote the use of enabling technologies for improving care coordination for beneficiaries. Specifically, such enabling technologies and services may include electronic health records and other health IT tools (such as population health management and data aggregation and analytic tools), telehealth services, remote patient monitoring, health information exchange services or other electronic tools to engage patients in their care.

In response to the comment suggesting that communications and information be accessible to people with impairments, we note that according to § 425.208(b), the ACO must agree, and must require its ACO participants, ACO providers/suppliers, and other individuals or entities performing functions or services related to the ACO's activities to comply with all applicable laws, including laws such as the Rehabilitation Act of 1973, to ensure access to enabling technologies for individuals with disabilities.

Comment: Several commenters supported our proposal to add a provision under § 425.112(b)(4)(ii)(E) to require that an ACO define and submit major milestones or performance targets that it will use in each performance year to assess the progress of its ACO participants in implementing the elements required under § 425.112(b)(4). However, a majority of commenters opposed this proposal. Commenters who supported the proposal indicated that they believe that milestones would be important to keep the ACO and ACO participants accountable to their care coordination plan. Others requested clarification on what the penalties would be if targets and milestones are not met as well as how often these targets and milestones must be reported by ACOs. Commenters who were opposed to the proposal stated that additional eligibility requirements would be an administrative burden and distract from the actual coordination of care. A commenter suggested the CMS amend this proposal to require that the ACO take into account the cultural needs, and health and technological literacy of the community when setting milestones. Another commenter wondered if this requirement would apply to ACOs renewing their participation agreements.

Response: We believe that setting milestones is important for an ACO to track its progress and the progress of its ACO participants in implementing care coordination activities and the use of enabling technologies. However, we agreed with commenters who believe the requirement to be overly burdensome. We note that although we are not finalizing this specific requirement at this time, ACOs are currently required under § 425.112(b)(4), as a condition of program eligibility and participation, to ''define, establish, implement, evaluate, and periodically update'' processes to promote care coordination among primary care physicians, specialist, and acute and post-acute providers and suppliers. We believe that the obligation to evaluate such processes necessarily entails an evaluation of the ACO's progress in achieving care coordination. We will continue to monitor ACO progress on HIT infrastructure as part of program administration. In addition, we will assess general progress through ACO performance on measures related to HIT adoption and use, for instance, the current MSSP quality measure around participation in the EHR Incentives program, or a future measure which would reflect ACO providers' ability to electronically exchange data to support care transitions. We also encourage providers to monitor the degree of interoperability and exchange across providers in their ACO, which could include evaluating performance on the transition of care or health information exchange measures in the EHR Incentives Program.

FINAL ACTION: For the reasons previously discussed, we are finalizing our proposal to add a new requirement to the eligibility requirements under § 425.112(b)(4)(ii)(C) which will require an ACO to describe in its application how it will encourage and promote the use of enabling technologies for improving care coordination for beneficiaries. Specifically, such enabling technologies and services may include electronic health records and other health IT tools (such as population health management and data aggregation and analytic tools), telehealth services, remote patient monitoring, health information exchange services, or other electronic tools to engage patients in their care. We note that in section II.F. of this final rule we consider payment rule waivers for such things as telehealth services.

Additionally, we are finalizing our proposal to add a new provision at § 425.112(b)(4)(ii)(D) to require the applicant to describe how the ACO intends to partner with long-term and post-acute care providers to improve care coordination for the ACO's assigned beneficiaries. We note that in section II.F.7. of this final rule we discuss and finalize a waiver of the SNF 3-day rule.

Finally, based on comments, we will not finalize our proposal to add a provision under § 425.112(b)(4)(ii)(E) to require that an ACO define and submit major milestones or performance targets it will use in each performance year to assess the progress of its ACO participants in implementing the elements required under § 425.112(b)(4). Although this requirement is not being finalized, ACOs are currently required under § 425.112(b)(4), as a condition of program eligibility and participation, to ''define, establish, implement, evaluate, and periodically update'' processes to promote care coordination among primary care physicians, specialist, and acute and post-acute providers and suppliers. We believe that the obligation to evaluate such processes necessarily entails an evaluation of the ACO's progress in achieving care coordination.

9. Transition of Pioneer ACOs Into the Shared Savings Program

a. Overview

The Center for Medicare and Medicaid Innovation (the CMS Innovation Center) was established by section 1115A of the Act (as added by section 3021 of the Affordable Care Act) for the purpose of testing ''innovative payment and service delivery models to reduce program expenditures . . . while preserving or enhancing the quality of care'' for those individuals who receive Medicare, Medicaid, or Children's Health Insurance Program (CHIP) benefits. The Pioneer ACO Model is a CMS Innovation Center initiative designed for organizations with experience operating as ACOs or in similar arrangements. Among the design elements being tested by the Pioneer ACO Model is the impact of using two-sided risk and different payment arrangements in to achieve the goals of providing better care to patients, and reducing Medicare costs. Under section 1899(b)(4) of the Act, to be eligible to participate in the Shared Savings Program, a provider of services or supplier may not also be participating in a program or demonstration project that involves shared savings, such as the Pioneer ACO Model. Thus, Pioneer ACOs are not permitted to participate concurrently in the Shared Savings Program. As Pioneer ACOs complete the model test (the agreement is for a minimum of 3 years with an option to participate for an additional 2 years), they would have an opportunity to transition to the Shared Savings Program. We believe it would be appropriate to establish an efficient process to facilitate this transition in a way that minimizes any unnecessary burdens on these ACOs and on CMS.

b. Proposed Revisions

In order to do this, we proposed to use a transition process that is similar to the transition process we established previously for Physician Group Practice (PGP) demonstration participants applying to participate in the Shared Savings Program. The PGP demonstration, authorized under section 1866A of the Act, was our first experience with a shared savings program in Medicare and served as a

model for many aspects of the Shared Savings Program.

In the November 2011 final rule (76 FR 67834), we finalized § 425.202(b), which provides that PGP sites applying for participation in the Shared Savings Program will be given the opportunity to complete a condensed application form. This condensed application form requires a PGP site to provide the information that was required for the standard Shared Savings Program application but that was not already obtained through its application for or via its participation in the PGP demonstration. Also, a PGP participant would be required to update any information contained in its application for the PGP demonstration that was also required on the standard Shared Savings Program application. Former PGP participants qualified to use a condensed application form if their ACO legal entity and TINs of ACO participant were the same as those that participated under the PGP demonstration.

We noted that, as we continue to implement the Shared Savings Program, we will likely have a similar situation with regard to Pioneer ACOs that have completed their current agreement and wish to transition to the Shared Savings Program. Given that we have been working with and have a level of familiarity with these organizations similar to that with the PGP participants, we stated our belief that it was appropriate to consider offering some latitude with regard to the process for applying to the Shared Savings Program for these ACOs.

Thus, we proposed to revise § 425.202(b) to offer Pioneer ACOs the opportunity to apply to the Shared Savings Program using a condensed application if three criteria are satisfied. First, the applicant ACO must be the same legal entity as the Pioneer ACO. Second, all of the TINs on the applicant's ACO participant list must have appeared on the ''Confirmed Annual TIN/NPI List'' (as defined in the Pioneer ACO Model Innovation Agreement with CMS) for the applicant ACO's last full performance year in the Pioneer ACO Model. Third, the applicant must be applying to participate in a two-sided model. We noted that, consistent with the statute and our regulation at § 425.114, any Pioneer ACO transitioning to the Shared Savings Program must apply to participate in the Shared Savings Program for an agreement period that would start after its participation in the Pioneer ACO Model has ceased. We further noted that Pioneer ACOs transitioning to the Shared Savings Program would be subject to the standard program integrity screening and an evaluation of their history of compliance with the requirements of the Pioneer ACO Model.

Regarding the second criterion, we recognized that there are differences between the Pioneer ACO Model and the Shared Savings Program, and that only some of the NPIs within a TIN might have participated in the Pioneer ACO. Therefore, for purposes of determining whether a condensed application will be appropriate under the Shared Savings Program, we stated we would compare only the TINs and not NPIs. We also recognized that some TINs may not be able to obtain the consent of all NPIs billing through the TIN to participate in the Shared Savings Program, which disqualifies the TIN from participating in the program. Therefore, unlike with the PGP demonstration sites, we proposed to allow the ACO applicant to complete a condensed application form even if it drops TINs that participated in its Pioneer ACO. However, we proposed that if the applicant ACO includes TINs that were not on the Pioneer ACO's Confirmed Annual TIN/NPI List for its last full performance year in the Pioneer ACO Model, the applicant would be required to use the standard application for the Shared Savings Program. A Pioneer ACO applying to the Shared Savings Program using a condensed application form would be required to include a narrative description of the modifications they need to make to fulfill our requirements (for example, making changes to the governing body and obtaining or revising agreements with ACO participants and ACO providers/suppliers).

Because the Pioneer ACO Model is a risk-bearing model designed for more experienced organizations, the third proposed criterion would permit Pioneer ACOs to use the condensed application only if they apply to participate in the Shared Savings Program under a two-sided model. We established Track 1 of the Shared Savings Program as an on-ramp for ACOs while they gain experience and become ready to accept risk. In this case, the Pioneer ACOs are already experienced and will have already accepted significant financial risk. Therefore, under this proposal, former Pioneer ACOs would not be permitted to enter the Shared Savings Program under Track 1. We further noted that the rules and methodologies used under the Pioneer ACO Model to assess performance-based risk are different than under the Shared Savings Program. Therefore, we encourage former Pioneer Model ACOs to carefully consider the risk-based track to which they apply under the Shared Savings Program, and to be cognizant of the differences in rules and methodologies.

We sought comments on this proposal to establish a condensed application process for Pioneer ACOs applying to participate in the Shared Savings Program and to require such Pioneer ACOs to participate under a track that includes performance-based risk. We noted that Pioneer ACOs that do not meet criteria for the condensed application would have to apply through the regular application process.

Comment: Commenters supported our proposal to revise § 425.202(b) to offer Pioneer ACOs the opportunity to apply to the Shared Savings Program using a condensed application. A commenter expressed concern that a transition to the Shared Savings Program might ''disenfranchise both nurse practitioners and their patients'' because of the statutory criterion that beneficiaries be assigned to Shared Savings Program ACOs based on primary care services rendered by physicians. Another commenter supported the proposals but recommended that CMS require Pioneer ACOs to complete a narrative detailing the modifications the ACO would make to comply with Shared Savings Program rules.

Response: We appreciate the support for our proposal to allow Pioneer ACOs to enter the Medicare Share Saving Program using a condensed application. We recognize there are differences between the Pioneer ACO Model and the Shared Savings Program requirements and methodologies, such as the assignment methodology, that may alter whether beneficiaries seen by certain provider types become assigned to a Shared Savings Program ACO. We believe that the commenter's concern regarding the differences in assignment methodologies and the ''disenfranchisement'' it may cause is not a sufficient reason to deny Pioneer ACOs the opportunity to use a condensed application when transitioning to the Shared Savings Program. Additionally, we intend to ensure that all applicants to the program are appropriately screened and meet eligibility requirements prior to participation, including applicants that may qualify to use a condensed application. As stated previously, the condensed application form will require the Pioneer ACO to describe the modifications it will need to make to fulfill our requirements (for example, making changes to the governing body and obtaining or revising agreements

with ACO participants and ACO providers/suppliers).

Comment: A few commenters suggested that CMS alter the criterion that a Pioneer ACO may use a condensed application if the applicant ACO is the same legal entity as the entity that participated under the Pioneer ACO Model. These commenters suggested that the criterion should be revised so that a former Pioneer ACO may demonstrate that it is either the same legal entity or that the majority of its ACO participants would remain the same. Several commenters requested that the criteria be modified to require a full application only if there is a 50 percent or greater change in the TIN makeup of the ACO. Another commenter recommended elimination of this criterion but did not provide details for the reason.

Response: We appreciate the suggestion; however, we believe the best way to determine if the organization is the same entity that is transitioning to the Shared Savings Program from the Pioneer ACO Model is to establish that its legal entity has the same TIN. As articulated by commenters in response to our proposal under § 425.214(a) to quantify a significant change in the ACO participant list, a simple percent threshold does not necessarily identify a 50 percent change, and a majority change could easily occur with the addition or removal of a very small number of TINs if the ACO is small. Similarly, we believe assessing whether the organization is the same on the basis of a percentage of a consistent cohort of ACO participant TINs is problematic. Therefore, we will finalize the criterion that a Pioneer ACO may use a condensed application if the applicant ACO is the same legal entity as the entity that participated under the Pioneer ACO Model.

Comment: Several commenters suggested CMS either eliminate or modify the criterion that in order to qualify to use the condensed application, all TINs on the applicant's ACO participant list must have appeared on the ''Confirmed Annual TIN/NPI List'' (as defined in the Pioneer ACO Model Innovation Agreement with CMS) for the applicant ACO's last full performance year in the Pioneer ACO Model. A few commenters suggested that Pioneer ACOs should be allowed to also include any TINs that they planned to add midyear (that is, during the application period). Several commenters supported comparing only ACO participant TINs and not ACO provider/supplier (NPI) lists because of the different rules under the two initiatives.

Response: We agree with commenters that supported the proposal to compare only TINs and not NPIs when assessing the ability of a Pioneer ACO that seeks to use a condensed application when transitioning to the Shared Savings Program. As we noted in the proposed rule, we recognized that there are differences between the Pioneer ACO Model and the Shared Savings Program, and that only some of the NPIs within a TIN might have participated in the Pioneer ACO. Therefore, for purposes of determining whether a condensed application will be appropriate under the Shared Savings Program, we stated we would compare only the TINs and not NPIs. We also recognized that some TINs may not be able to obtain the consent of all NPIs billing through the TIN to participate in the Shared Savings Program, which disqualifies the TIN from participating in the program. Therefore, unlike with the PGP demonstration sites, we proposed to allow the ACO applicant to complete a condensed application form even if it drops TINs that participated in its Pioneer ACO. While we understand the desire for organizations to annually update the ACO participants list, we have concerns that that permitting an ACO to add TINs during the application cycle during its transition to the Shared Savings Program would erode our ability to determine if the ACO closely approximates the same organization that is currently participating in the Pioneer ACO Model and thus its ability to qualify for using a condensed application. We welcome such ACOs to apply through the normal application process which permits both additions and deletions to the ACO participant list during the course of application review.

Comment: Many commenters strongly encouraged CMS not to define which track the applicant ACO must enter. Commenters suggested that although a Pioneer ACO participated in the more ''advanced'' program, there are different program rules in the Shared Savings Program. Additionally, a Pioneer ACO transitioning to the Shared Savings Program may not have been comfortable with the risk levels taken in Pioneer ACOs and may believe it should have the opportunity to move into a lower risk track.

Response: We clarify that we are not defining what track a transitioning Pioneer ACO must enter. Instead, we are offering the opportunity, when certain criteria are met, for such organizations to seamlessly transition to the Shared Savings Program using a condensed application, similar to the application offered to PGP demonstration sites as they transitioned from the PGP demonstration to the Shared Savings Program. We believe these criteria are necessary and important to provide us with some assurance that the organization that is participating in the Pioneer ACO Model will be the same organization that will participate in the Shared Savings Program. We note that several former Pioneer ACOs that participated in the early years of the model were not comfortable with the increased risk that was phased in under the model after terminating their participation in the model; they used the normal application process to enter the Shared Savings Program under Track 1. We clarify that our proposal to use a condensed application was intended to assist Pioneer ACOs that are currently participating in the Pioneer ACO Model to transition seamlessly to the Shared Savings Program. We acknowledge that there are methodological differences between the two initiatives; however, because the Pioneer ACOs are currently participating in the model under performance-based two-sided risk, we do not believe such entities should be permitted to apply under Track 1. We recognize that such entities may wish to modify aspects of their organization, such as adding or removing certain Medicare-enrolled TINs from participation, or for other reasons may no longer be comfortable continuing to take two-sided risk. Such entities may not meet criteria for completing a condensed application or could choose to apply to the program through the normal application process. Such ACOs would then have the opportunity to elect to participate under Track 1. We also note that, similar to the process for offering PGP demonstration sites the opportunity to transition to the Shared Savings Program using a condensed application, we anticipate that this opportunity would be time-limited. In other words, because the Pioneer ACO Model is scheduled to end after next year, we anticipate that the only organizations transitioning would be those that apply in the summer of 2015 for a 2016 start date and those that apply in the summer of 2016 for a 2017 start date.

FINAL ACTION: We are finalizing and clarifying our proposal to use a transition process that is similar to the transition process we established previously for Physician Group Practice (PGP) demonstration participants applying to participate in the Shared Savings Program.

Specifically we are finalizing our proposal to revise § 425.202(b) to offer Pioneer ACOs the opportunity to apply to the Shared Savings Program using a

condensed application if certain criteria are satisfied. First, the applicant ACO must be the same legal entity as the Pioneer ACO. Second, all of the TINs on the applicant's ACO participant list must have appeared on the ''Confirmed Annual TIN/NPI List'' (as defined in the Pioneer ACO Model Innovation Agreement with CMS) for the applicant ACO's last full performance year in the Pioneer ACO Model. Third, the applicant must be applying to participate in a two-sided model. We note that, consistent with the statute and our regulation at § 425.114, any Pioneer ACO transitioning to the Shared Savings Program must apply to participate in the Shared Savings Program for an agreement period that would start after its participation in the Pioneer ACO Model has ceased. We further note that Pioneer ACOs transitioning to the Shared Savings Program would be subject to the standard program integrity screening and an evaluation of their history of compliance with the requirements of the Pioneer ACO Model.

C. Establishing and Maintaining the Participation Agreement With the Secretary

1. Background

The November 2011 final rule established procedures for applying to participate in the Shared Savings Program, including the need to submit a complete application, the content of the application, and our criteria for evaluating applications (see §§ 425.202 through 425.206). In addition, § 425.212 specifies which changes to program requirements will apply during the term of an ACO's participation agreement. In this section we discuss our proposals to clarify and to supplement the rules related to these requirements.

The current regulations address certain issues with respect to ACOs that wish to reapply after termination or experiencing a loss during their initial agreement period (§§ 425.222 and 425.600(c), respectively). However, the regulations are silent with respect to the procedures that apply to ACOs that successfully complete a 3-year agreement and would like to reapply for a subsequent agreement period in the Shared Savings Program. In this section, we discuss our proposal to establish the procedure for an ACO to renew its participation agreement for a subsequent agreement period.

2. Application Deadlines

a. Overview

To obtain a determination on whether a prospective ACO meets the requirements to participate in the Shared Savings Program, our rules at § 425.202(a) require that an ACO submit a complete application in the form and manner required by CMS by the deadline established by CMS. Information on the required content of applications can be found in § 425.204, as well as in guidance published at *http://www.cms.gov/Medicare/Medicare-Fee-for-Service-Payment/sharedsavingsprogram/Application.html.* Among other requirements, applications must include certain information such as an ACO's prior participation in or termination from the program (§ 425.204(b)); documents such as participation agreements, employment contracts and operating policies (§ 425.204(c)(1)(i)); and a list of all ACO participants and their Medicare-enrolled TINs (§ 425.204(c)(5)(i)).

We determine and publish in advance on our Web site the relevant due dates for the initial submission of applications for each application cycle. While we expect ACOs to submit a completed application by the initial application due date specified on our Web site, we recognize that there may be portions of the application where additional information is necessary for CMS to make a determination. Therefore, according to § 425.206(a)(2), we notify an applicant when additional information is needed and provide an opportunity to submit information to complete the application by a deadline specified by CMS in the notice.

As stated in § 425.206(a), CMS evaluates an ACO's application on the basis of the information contained in and submitted with the application. Applications that remain incomplete after the deadline specified by CMS are denied. It is incumbent upon the ACO applicant to submit timely the information that is required for CMS to decide whether the applicant is eligible to participate in the program.

Finally, under § 425.202(c), CMS determines whether an applicant satisfies the requirements and is qualified to participate in the Shared Savings Program.

b. Proposed Revisions

In implementing the Shared Savings Program, we found that some applicants misunderstood our application process and the need to submit all required information by a specified deadline for submission of applications and supporting information. Thus, we proposed to revise our application review process set forth at § 425.206(a) to better reflect our review procedures.

We proposed to consolidate at § 425.206 two similar provisions regarding application review. Currently, § 425.202(c)(1) regarding application review provides that CMS determines whether an applicant satisfies the requirements of part 425 and is qualified to participate in the Shared Savings Program, and § 425.202(c)(2) provides that CMS approves or denies applications accordingly. We proposed to amend § 425.206(a)(1) to address the concept of application review currently set forth at § 425.202(c)(1), and we proposed to amend § 425.202(c) by replacing the existing text with language clarifying that CMS reviews applications in accordance with § 425.206.

We also proposed to revise § 425.206(a) to better reflect our application review process and the meaning of the reference to ''application due date.'' Specifically, we proposed to revise § 425.206(a)(1) to clarify that CMS approves or denies an application on the basis of the following:

- Information contained in and submitted with the application by a deadline specified by CMS.
- Any supplemental information submitted in response to CMS' request for information and by a deadline specified by CMS.
- Other information available to CMS (including information on the ACO's program integrity history).

In addition, we proposed to amend § 425.206(a)(2) to clarify our process for requesting supplemental information and to add a new paragraph (a)(3) to specify that CMS may deny an application if an ACO applicant fails to submit supplemental information by the deadlines specified by CMS. We believe that additional clarity may result in more timely submission of the information necessary to evaluate applications. Moreover, it is critical that ACOs submit information on a timely basis so that we can perform other necessary operational processes before the start of the approved ACO's first performance year (for example, determining the number of beneficiaries assigned to the ACO, screening prospective ACO participants and ACO providers/suppliers, identifying the preliminary prospective list of assigned beneficiaries, and calculating the ACO's historical benchmark).

Comment: A few commenters supported our proposed changes as written. One of the commenters stated that it is important for ACOs to have definitive deadlines, and requested that CMS make clear all deadlines necessary for ACOs to meet all program

requirements, for example, deadlines for making public certain information.

Response: We agree with commenters that it is important to clearly communicate deadlines to ACOs. Specific application deadlines will continue to be posted on our Web site on an annual basis, and deadlines for the submission of supplemental information provided in response to a CMS' request will be communicated directly with applicants throughout the application review process. For ACOs that have been accepted into the program, we make announcements directly to ACOs through our weekly newsletter and the ACO's CMS coordinator. Deadlines are also indicated in guidance documents and the calendar posted on the ACO portal.

FINAL ACTION: We are finalizing our proposal to consolidate at § 425.206(a)(1) two similar provisions regarding application review found at § 425.202(c)(1) and § 425.202(c)(2). Therefore, we are finalizing our proposals to revise § 425.206(a)(1) to clarify that CMS approves or denies an application on the basis of the following:

- The information contained in and submitted with the application by the deadline.
- Any supplemental information submitted in response to a CMS request and by the specified deadline .
- Other information available to CMS (including information on the ACO's program integrity history).

Since incomplete applications prevent us from making a timely evaluation of whether the ACO satisfies the requirements of our regulations, we are also finalizing as proposed the policies related to application procedures and deadlines. Specifically, we are finalizing our proposals to amend § 425.206(a)(2) to clarify our process for requesting supplemental information and to add a new paragraph (a)(3) to specify that CMS may deny an application if an ACO applicant fails to submit information by the deadlines specified by CMS.

3. Renewal of Participation Agreements

a. Overview

For ACOs that would like to continue participating in the Shared Savings Program after the expiration of their current agreement period, we proposed a process for renewing their existing participation agreements, rather than requiring submission of a new or condensed application for continued program participation. Specifically, we proposed to add new § 425.224 to establish procedures for renewing the participation agreements of ACOs. In addition, we proposed (in section II.C.4. of the proposed rule) to modify the definition of ''agreement period'' at § 425.20 to clarify its meaning in the context of participation agreement renewals.

b. Proposed Revisions

Under proposed § 425.224(a), an ACO would be permitted to request renewal of its participation agreement prior to its expiration in a form and manner and by a deadline specified by CMS in guidance. We proposed that an ACO executive who has the authority to legally bind the ACO must certify that the information contained in the renewal request is accurate, complete, and truthful. Further, we proposed that an ACO that seeks renewal of its participation agreement and was newly formed after March 23, 2010, as defined in the Antitrust Policy Statement, must agree that CMS can share a copy of its renewal request with the Antitrust Agencies (as defined at § 425.20). We anticipated that our operational guidance will outline a process permitting renewal requests during the last performance year of an ACO's participation agreement. For example, we stated that an ACO with a participation agreement ending on December 31, 2015 would be offered the opportunity to renew its participation agreement sometime during the 2015 calendar year in preparation to begin a new 3-year agreement period on January 1, 2016. To streamline program operations, we anticipated specifying a timeframe for submission and supplementation of renewal requests that would coincide with the deadlines applicable to submission and supplementation of applications by new ACO applicants under § 425.202.

Under proposed § 425.224(b), we proposed to evaluate an ACO's participation agreement renewal based on all of the following factors:

- Whether the ACO satisfies the criteria for operating under the selected risk model.
- The ACO's history of compliance with the requirements of the Shared Savings Program.
- Whether ACO established that it is in compliance with the eligibility and other requirements of the Shared Savings Program, including the ability to repay losses, if applicable.
- Whether the ACO met the quality performance standards during at least 1 of the first 2 years of the previous agreement period.
- Whether an ACO under a two-sided model repaid losses owed to the program that it generated during the first 2 years of the previous agreement period.
- The results of a program integrity screening of the ACO, its ACO participants, and its ACO providers/suppliers (conducted in accordance with § 425.304(b)).

We solicited comments on these criteria and any additional criteria that would help ensure the success of the program.

We further proposed to approve or deny a renewal request based on the information submitted in the request and other information available to CMS. We proposed to notify the ACO when the initial request is incomplete or inadequate and to provide an opportunity for the ACO to submit supplemental information to correct the deficiency. Under the proposal, the ACO must submit both the renewal request and any additional information needed to evaluate the request in the form and manner and by the deadlines specified by CMS.

Under § 425.224(c), we proposed to notify each ACO in writing of our determination to approve or deny the ACO's renewal request. If we were to deny the renewal request, the notice would specify the reasons for the denial and inform the ACO of any rights to request reconsideration review in accordance with the procedures specified in part 425 subpart I.

We stated our belief that a simple renewal process would reduce the burden for ACOs that wish to continue in the program and minimize the administrative burden on CMS, which would allow us to focus our attention on new applicants that have not yet established their eligibility to participate. We stated our intention to establish the deadlines and other operational details for this renewal process through guidance and instructions. Finally, we noted that under our proposal to modify the definition of the participation ''agreement period'' (section II.C.4 of this final rule), a new agreement period would begin upon the start of the first performance year of the renewed participation agreement.

Comment: A few stakeholders expressed support for our efforts to develop a renewal process. A commenter stated that the proposed criteria were appropriate and adequate to ensure the success of the program and to reduce the administrative burden on CMS and ACOs. Some offered specific comments related to the criteria for permitting an ACO to renew its agreement. For example, some commenters agreed that the renewal process should review the ACO's

history of compliance and quality performance. Some commenters suggested that CMS consider additional criteria for renewing current agreements, including the following:

- The stability of leadership.
- Attainment of certain levels of EHR implementation or accreditation.
- Establishment of a partnership with Geriatric Workforce Enhancement Programs.
- Other criteria related to the ACO's ability to perform utilization review and accept performance-based risk.

A commenter recommended that an ACO changing its legal entity or undergoing substantial changes in its ACO participant list be permitted to use the renewal application, rather than having to submit an application as a new ACO applicant.

Response: We agree with the commenters regarding the advantages of providing a more flexible renewal process for current ACOs who meet our specific criteria. We appreciate the support for our proposed renewal criteria and the suggested criteria; however, we do not believe that additional criteria are necessary at this time. As stated in the proposed rule, we believe the criteria as proposed will both ensure continued compliance with program rules and reduce the burden for ACOs that wish to continue in the program and minimize the administrative burden on CMS, which will allow us to focus our attention on new applicants that have not yet established their eligibility to participate. We clarify that ACOs seeking to renew agreements must be entities that have previously participated in the Shared Savings Program. In other words, the same legal entity that previously participated in the program may renew its agreement for a subsequent agreement period. New organizations that have not previously participated in the Shared Savings Program may apply using the established application process. We believe it is important to conduct a complete review of any new legal entity that wishes to apply for participation in the program.

FINAL ACTION: We are finalizing our policies as proposed regarding the renewal process. Specifically, we are finalizing our proposal to add new § 425.224 to establish procedures for renewal of the participation agreements of ACOs. Under § 425.224(a), an ACO will be permitted to request renewal of its participation agreement prior to its expiration in a form and manner and by a deadline specified by CMS in guidance. An ACO executive who has the authority to legally bind the ACO must certify that the information contained in the renewal request is accurate, complete, and truthful. Further, an ACO that seeks renewal of its participation agreement and was newly formed after March 23, 2010, as defined in the Antitrust Policy Statement, must agree that CMS can share a copy of its renewal request with the Antitrust Agencies. To streamline program operations, we anticipate specifying in guidance a timeframe for submission and supplementation of renewal requests that will coincide with the deadlines applicable to submission and supplementation of applications by new ACO applicants under § 425.202.

Under § 425.224(b), CMS will evaluate an ACO's participation agreement renewal based on all of the following factors:

- Whether the ACO satisfied the criteria for operating under the selected risk model.
- The ACO's history of compliance with the requirements of the Shared Savings Program.
- Whether the ACO established that it is in compliance with the eligibility and other requirements of the Shared Savings Program, including the ability to repay losses, if applicable.
- Whether the ACO met the quality performance standards during at least 1 of the first 2 years of the previous agreement period.
- Whether an ACO under a two-sided model repaid losses owed to the program that it generated during the first 2 years of the previous agreement period.
- The results of a program integrity screening of the ACO, its ACO participants, and its ACO providers/suppliers (conducted in accordance with § 425.304(b)).

CMS approves or denies a renewal request based on the information submitted in the request and other information available to CMS and notifies the ACO when the request is incomplete or inadequate to provide an opportunity for the ACO to submit supplemental information to correct the deficiency. The ACO must submit both the renewal request and any additional information needed to evaluate the request in the form and manner and by the deadlines specified by CMS.

Under § 425.224(c), we are finalizing our proposal to notify each ACO in writing of our determination to approve or deny the ACO's renewal request. If we deny the renewal request, the notice will specify the reasons for the denial and inform the ACO of any rights to request reconsideration review in accordance with the procedures specified in part 425 subpart I.

4. Changes to Program Requirements During the 3-Year Agreement

a. Overview

In the November 2011 final rule (76 FR 67838), we recognized the potential for changes to the Shared Savings Program regulations that would become effective while participating ACOs are in the middle of an agreement period. Therefore, we promulgated a rule to specify under what conditions an ACO would be subject to regulatory changes that become effective after the start of its agreement period. Specifically, we finalized § 425.212(a)(2), which provided that ACOs are subject to all regulatory changes with the exception of changes to the eligibility requirements concerning ACO structure and governance, the calculation of the sharing rate, and the assignment of beneficiaries. We did not exempt ACOs from becoming immediately subject to other regulatory changes. For example, we did not exempt changes such as those related to quality measures because of our belief that requiring ACOs to adhere to changes related to quality measures would ensure that they keep pace with changes in clinical practices and developments in evidence-based medicine.

The November 2011 final rule did not require ACOs to be subject to any regulatory changes regarding beneficiary assignment that become effective during an agreement period because we recognized that changes in the beneficiary assignment methodology could necessitate changes to ACOs' financial benchmarks. At the time we published the November 2011 final rule (76 FR 67838), we had not developed a methodology for adjusting an ACO's benchmark to reflect changes in the beneficiary assignment methodology during an agreement period. We anticipated that ACOs would complete their 3-year agreement period with a relatively stable set of ACO participants. Therefore, they would all have stable benchmarks during the 3-year agreement period that would require updates only to reflect annual national FFS trends and changes in beneficiary characteristics, consistent with statutory requirements. Without a methodology for adjusting benchmarks to reflect changes in the beneficiary assignment methodology during the agreement period, we were reluctant to subject ACOs to immediate regulatory changes that could impact their benchmarks during the term of a participation agreement. However, in light of the extensive changes ACOs made to their lists of ACO participants during the first 2 performance years, the significant

effect these changes had upon beneficiary assignment, and our subsequent development of policies regarding benchmark adjustment at the start of each performance year to reflect such changes (see *http://www.cms.gov/Medicare/Medicare-Fee-for-Service-Payment/sharedsavingsprogram/Updating-ACO-Participant-List.html*), we proposed to revise the types of regulatory changes an ACO would become subject to during its agreement period. We also proposed to clarify § 425.212(a) regarding the applicability of certain regulatory changes and to clarify the definition of ''agreement period'' under § 425.20.

b. Proposed Revisions

We proposed to modify § 425.212(a) to provide that ACOs are subject to all regulatory changes ''that become effective during the agreement period,'' except for regulations regarding certain specified program areas (specifically, the eligibility requirements concerning the structure and governance of ACOs and calculation of the sharing rate), ''unless otherwise required by statute.'' This proposed revision corrects the omission of temporal language in the requirement regarding regulatory changes. In addition, it clarifies that ACOs would be subject to regulatory changes regarding ACO structure and governance, and calculation of the sharing rate during an agreement period if CMS is mandated by statute to implement such changes by regulation in the middle of a performance year.

In addition, we proposed to modify the definition of ''agreement period'' at § 425.20. The term ''agreement period'' is currently defined at § 425.20 to mean ''the term of the participation agreement which begins at the start of the first performance year and concludes at the end of the final performance year.'' However, in light of our proposal to renew participation agreements (see section II.C.3. of this final rule), the reference to ''final performance year'' in the existing definition is ambiguous. For example, if the ''final performance year'' of the agreement period includes the last performance year of a renewed participation agreement, an ACO would never be subject to regulatory changes regarding ACO structure and governance or calculation of the sharing rate. Therefore, we proposed to amend the definition to provide that the agreement period would be 3-performance years, unless otherwise specified in the participation agreement. Thus, an ACO whose participation agreement is renewed for a second or subsequent agreement period would be subject, beginning at the start of that second or subsequent agreement period, to any regulatory changes regarding ACO structure and governance that became effective during the previous 3 years (that is, during the preceding agreement period).

Also, we proposed to require ACOs to be subject to any regulatory changes regarding beneficiary assignment that become effective during an agreement period. Specifically, we proposed to remove beneficiary assignment as an exception under § 425.212(a). Consistent with our authority under section 1899(d)(1)(B)(ii) of the Act to adjust the benchmark ''for beneficiary characteristics and other factors as the Secretary determines appropriate,'' we have now developed operational policies under which we are able to adjust the benchmark on a yearly basis to account for changes in beneficiary assignment resulting from changes in the ACO's list of ACO participants. For more detailed information on these policies see *http://www.cms.gov/Medicare/Medicare-Fee-for-Service-Payment/sharedsavingsprogram/Updating-ACO-Participant-List.html*. Given that these operational policies enable annual adjustments to ACO benchmarks to account for changes in beneficiary assignment resulting from changes in ACO participants, we believe we would also be able to adjust an ACO's benchmark to account for regulatory changes regarding beneficiary assignment methodology that become effective during an agreement period. Accordingly, we do not believe our proposal to make regulatory changes regarding beneficiary assignment applicable to ACOs during an agreement period would inappropriately affect the calculation of an ACO's benchmark or shared savings for a given performance year. Rather, our adjustment methodology will ensure continued and appropriate comparison between benchmark and performance year expenditures.

Under this proposal, regulatory changes regarding beneficiary assignment would apply to all ACOs, including those ACOs that are in the middle of an agreement period. However, as discussed in section II.E.6. of this final rule, we also proposed that any final regulations that affect beneficiary assignment would not be applicable until the start of the next performance year. We believe that implementing any revisions to the assignment methodology at the beginning of a performance year is reasonable and appropriate because it would permit time for us to make the necessary programming changes and would not disrupt the assessment of ACOs for the current performance year. Moreover, we would adjust all benchmarks at the start of the first performance year in which the new assignment rules are applied so that the historical benchmark for an ACO reflects the use of the same assignment rules that would apply in the performance year.

We also noted that we would carefully consider the timing and effect on both current and future ACOs of any new regulatory proposal, and when promulgating new regulatory changes through rulemaking, we would solicit comment on these matters. Additionally, when implementing a final rule that changes our processes and methodologies, we stated that we would alert current and prospective ACOs of such changes via CMS communications and updates to guidance.

Comment: Ae commenter recommended a uniform start of January 1 of the year following changes in regulations to allow ACOs to adequately plan, budget, recruit, and make the necessary staffing adjustments to meet new requirements. Another commenter suggested that CMS proceed cautiously when making regulatory changes that would impact an ACO in the middle of an agreement period. Finally, another commenter recommended that CMS permit ACOs to exit the MSSP during a performance year if the ACO believes the regulatory changes are detrimental to the ACO's performance goals.

Response: We appreciate the comments regarding regulatory changes and their impact on ACOs that are currently participating in the program. We agree with stakeholders that January 1 of a performance year is a logical time to make regulatory changes effective for beneficiary assignment. We also agree that regulatory changes that impact ACOs during an agreement should be considered carefully, and the rulemaking process will provide ACOs with an opportunity to comment on the effective date for such changes. Finally, we note that an ACO is permitted under § 425.212(d) to terminate its participation agreement in those instances where statutory or regulatory standards are established during the agreement period which the ACO believes will impact its ability to continue participating in the Shared Savings Program.

Comment: A few commenters agreed with our proposed revision of the definition of an agreement period as written. Several commenters specifically supported the revision because they believe this would give CMS flexibility to extend the agreement

period from three to five years as discussed in greater detail in section II.F.2. of this final rule.

Response: We appreciate the support for the revision to the definition of an agreement period and will finalize as proposed. As further discussed in section II.F.3. of this final rule, we do not at this time intend to extend the term of an ACO's agreement period. In accordance with § 425.200(b)(2)(ii), the term of the agreement period is three years for ACOs that are approved to participate in the Shared Savings Program for 2013 and all subsequent years.

FINAL ACTION: We are finalizing our policies as proposed. Specifically, we are finalizing our modification of § 425.212(a) to provide that ACOs are subject to all regulatory changes ''that become effective during the agreement period,'' except for regulations regarding certain specified program areas, ''unless otherwise required by statute.'' This proposed revision corrects the omission of temporal language in the requirement regarding regulatory changes and clarifies that ACOs are subject to regulatory changes regarding ACO structure and governance, and calculation of the sharing rate during an agreement period if CMS is mandated by statute to implement such changes by regulation in the middle of a performance year.

In addition, we are finalizing our modification of the definition of ''agreement period'' at § 425.20. Thus, an ACO whose participation agreement is renewed for a second or subsequent agreement period would be subject, beginning at the start of that second or subsequent agreement period, to any regulatory changes regarding ACO structure and governance that became effective during the previous 3 years (that is, during the preceding agreement period).

Also, we are finalizing our proposal to remove beneficiary assignment as an exception under § 425.212(a). Regulatory changes regarding beneficiary assignment will apply to all ACOs, including those ACOs that are in the middle of an agreement period. However, as discussed in section II.E.6. of this final rule, any final policies that affect beneficiary assignment will not apply until the start of the next performance year. We believe that implementing any revisions to the assignment methodology at the beginning of a performance year is reasonable and appropriate, because it will allow us to make the necessary programming changes and will not disrupt the assessment of ACOs for the current performance year. Moreover, we will adjust all benchmarks at the start of the first performance year in which the new assignment rules are applied so that the historical benchmark for an ACO reflects the use of the same assignment rules that will apply in the performance year.

D. Provision of Aggregate and Beneficiary Identifiable Data

1. Background

Under section 1899(b)(2)(A) of the Act, an ACO must ''be willing to become accountable for the quality, cost, and overall care of the Medicare fee-for-service beneficiaries assigned to it.'' Furthermore, in order to be eligible to participate in the Shared Savings Program, section 1899(b)(2)(G) of the Act states an ''ACO shall define processes to . . . report on quality and cost measures, and coordinate care. . . .'' However, section 1899 of the Act does not address what data, if any, we should make available to ACOs on their assigned beneficiary populations to support them in evaluating the performance of ACO participants and ACO providers/suppliers, conducting quality assessment and improvement activities, or conducting population-based activities relating to improved health.

As we explained in the November 2011 final rule (76 FR 67844), in agreeing to become accountable for a group of Medicare beneficiaries, and as a condition of participation in the Shared Savings Program, we expect that ACOs will have, or are working towards having, processes in place to independently identify and produce the data they believe are necessary to best evaluate the health needs of their patient population, improve health outcomes, monitor provider/supplier quality of care and patient experience of care, and produce efficiencies in utilization of services. Therefore, it is our expectation that ACOs are actively working on developing and refining these processes. Moreover, we continue to believe this ability to independently identify and produce data for evaluating, improving, and monitoring the health of their patient population is a critical skill for each ACO to develop, leading to an understanding of the patient population that it serves. Once the ACO achieves an understanding of its patient population, it can work toward redesigning appropriate care processes to address the specific needs of its patient population.

However, as we noted previously (76 FR 67844), while an ACO typically should have, or at least be moving towards having complete information for the services its ACO providers/suppliers furnish to Medicare FFS beneficiaries, we recognize that the ACO may not have access to information about services provided to its assigned beneficiaries by health care providers and suppliers outside the ACO—information that may be key to the ACO's coordination of care efforts. Therefore, during the original rulemaking process for the Shared Savings Program, we proposed and made final a policy—

- To distribute aggregate-level data reports to ACOs;
- Upon request from the ACO, to share limited identifying information about beneficiaries who are preliminarily prospectively assigned to the ACO and whose information serves as the basis for the aggregate reports; and
- Upon request from the ACO, to share certain beneficiary identifiable claims data with the ACO to enable it to conduct quality assessment and improvement activities, care coordination, or both, on its own behalf as a covered entity, or on behalf of its ACO participants and ACO providers/suppliers that are covered entities, unless the beneficiary chooses to decline to share his or her claims data.

As we stated in the November 2011 final rule (76 FR 67844), we believe that access to beneficiary identifiable information would provide ACOs with a more complete picture about the care their assigned beneficiaries receive, both within and outside the ACO. In addition, it is our view that this information would help ACOs evaluate providers'/suppliers' performance, conduct quality assessment and improvement activities, perform care coordination activities, and conduct population-based activities relating to improved health.

In the April 2011 proposed rule (76 FR 19558), we described the circumstances under which we believe that the HIPAA Privacy Rule would permit our disclosure of certain Medicare Part A and B data to ACOs participating in the Shared Savings Program. Specifically, under the Shared Savings Program statute and regulations, ACOs are tasked with working with their ACO participants and ACO providers/suppliers to evaluate their performance, conduct quality assessment and improvement activities, perform care coordination activities, and conduct population-based activities relating to improved health for their assigned beneficiary population. When done by or on behalf of a covered entity, these are functions and activities that would qualify as ''health care

operations'' under the first and second paragraphs of the definition of health care operations at 45 CFR 164.501. As such, these activities can be done by an ACO either on its own behalf, if it is itself a covered entity, or on behalf of its covered entity ACO participants and ACO providers/suppliers, in which case the ACO would be acting as the business associate of its covered entity ACO participants and ACO providers/suppliers. Accordingly we concluded that the disclosure of Part A and B claims data would be permitted by the HIPAA Privacy Rule provisions governing disclosures for ''health care operations,'' provided certain conditions are met.

As we also discussed, upon receipt of a request for protected health information (PHI), a covered entity or its business associate is permitted to disclose PHI to another covered entity or its business associate for the requestor's health care operations if both entities have or had a relationship with the subject of the records to be disclosed (which is true in the Shared Savings Program), the records pertain to that relationship (which is also true in the Shared Savings Program), and the recipient states in its request for the data that it plans to use the records for a ''health care operations'' function that falls within the first two paragraphs of the definition of ''health care operations'' in the HIPAA Privacy Rule and that the data requested are the ''minimum necessary'' to carry out those health care operations. (See, the HIPAA Privacy regulations at 45 CFR 164.502(b) and 164.506(c)(4)). The first two paragraphs of the definition of health care operations under 45 CFR 164.501 include evaluating a provider's or supplier's performance, conducting quality assessment and improvement activities, care coordination activities, and conducting population-based activities relating to improved health.

With respect to the relationship requirements in 45 CFR 164.506(c)(4), we have a relationship with the individuals who are the subjects of the requested PHI because they are Medicare beneficiaries. The ACO has a relationship with such individuals, either as a covered entity itself or on behalf of its covered entity ACO participants and ACO providers/suppliers as a business associate, because the individuals are either preliminarily prospectively assigned to the ACO or have received a primary care service during the past 12-month period from an ACO participant upon whom assignment is based. We note that when we refer to an ACO participant ''upon whom assignment is based,'' we are referring to an ACO participant that submits claims for primary care service used to determine the ACO's assigned population under 42 CFR part 425 subpart E. In addition, the requested PHI pertains to the individuals' relationship with both CMS and the ACO, in that we provide health care coverage for Medicare FFS beneficiaries and have an interest in ensuring that they receive high quality and efficient care, and the ACO is responsible for managing and coordinating the care of these individuals, who are part of the ACO's assigned beneficiary population.

Beneficiary identifiable Medicare prescription drug information could also be used by ACOs to improve the care coordination of their patient populations. Accordingly, consistent with the regulations governing the release of Part D data, in the April 2011 proposed rule (76 FR 19559), we also proposed to make available the minimum Part D data necessary to allow for the evaluation of the performance of ACO participants and ACO providers/suppliers, to conduct quality assessment and improvement, to perform care coordination, and to conduct population-based activities relating to improved health.

In the November 2011 final rule (76 FR 67846 and 67851), we adopted a policy that defined when we would share beneficiary identifiable information (including Part A and B claims data and Part D prescription drug event data) for preliminarily prospectively assigned beneficiaries and those beneficiaries who have a primary care visit with an ACO participant that is used to assign beneficiaries to the ACO. As a basic requirement, in order to receive such data an ACO that chooses to access beneficiary identifiable data is required under 42 CFR 425.704 to request the minimum data necessary for the ACO to conduct health care operations work, either as a HIPAA-covered entity in its own right, or as the business associate of one or more HIPAA-covered entities (where such covered entities are the ACO participants and ACO providers/suppliers), for ''health care operations'' activities that fall within the first or second paragraph of the definition of health care operations at 45 CFR 164.501. As part of their application to participate in the Shared Savings Program, ACOs certify whether they intend to request beneficiary identifiable information, and that the requested data reflects the minimum necessary for the ACO to conduct health care operations either on its own behalf or on behalf of its covered entity ACO participants and ACO provider/suppliers. Thus, the ACO's formal request to receive data is accomplished at the time of its application to the Shared Savings Program. The ACO must also enter into a data use agreement (DUA) with CMS. If all of these conditions are satisfied, CMS makes available certain limited PHI regarding the preliminarily prospectively assigned beneficiaries whose data were used to generate the aggregate data reports provided to the ACO under § 425.702(b) and other beneficiaries who have a primary care visit during the performance year with an ACO participant upon whom assignment is based. In order to enhance transparency and beneficiary engagement, we also finalized a policy that before ACOs may start receiving PHI in the form of beneficiary identifiable claims data, they must give beneficiaries the opportunity to decline sharing of their claims data as required under § 425.708.

As we stated in the proposed rule, since the publication of the November 2011 final rule, we have gained further experience with sharing data with ACOs participating in the Shared Savings Program. We explained in the proposed rule that we continue to believe that distributing aggregate reports, paired with making available certain beneficiary identifiable information related to preliminarily prospectively assigned beneficiaries, as well as making available the claims data for preliminarily prospectively assigned FFS beneficiaries and other FFS beneficiaries who have primary care service visits with ACO participants that submit claims for primary care services that are used to determine the ACO's assigned population, is worthwhile and consistent with the goals of the Shared Savings Program. The aggregate data reports and the beneficiary identifiable information related to preliminarily prospectively assigned beneficiaries give ACOs valuable information that can be used to better understand their patient population, redesign care processes, and better coordinate the care of their beneficiaries. ACOs participating in the Shared Savings Program have reported that the beneficiary identifiable claims data that they receive from us are being used effectively to better understand the FFS beneficiaries who are served by their ACO participants and ACO providers/suppliers. These data give ACOs valuable insight into patterns of care for their beneficiary population; enable them to improve care coordination among and across providers and suppliers and sites of care, including providers and suppliers and sites of care

not affiliated with the ACO; and allow them to identify and address gaps in patient care.

However, based upon our experiences administering the Shared Savings Program and feedback from stakeholders, we stated in the proposed rule that we believe that we can improve our data sharing policies and processes to streamline access to such data to better support the overall program, ACO functions and goals, and to better serve Medicare beneficiaries. Therefore, we proposed a number of modifications to our data sharing policies and procedures under the Shared Savings Program.

We received several general comments about data sharing under the Shared Savings Program.

Comment: A commenter suggested that we engage with the HHS interoperability roadmap work currently underway to ensure that the needs for sharing and integration of high quality, timely and interoperable data needed to support ACO functions are addressed. Some commenters requested that CMS share with ACOs the same type and amount of data that is routinely shared with MA plans and with the same frequency; for example, some commenters requested that we provide information to ACOs when a beneficiary's Medicare eligibility is checked by a provider or supplier. Some commenters stated they believe that the assignment methodology should be modified because it is responsible for creating delays in the provision of data, including claims data, quarterly data, and annual performance data.

Response: As noted in the November 2011 final rule, we expect that ACOs will have, or will be working towards having, processes in place to independently identify and produce the data they believe are necessary to best evaluate the health needs of their patient population, improve health outcomes, monitor provider/supplier quality of care and patient experience of care, and produce efficiencies in utilization of services. We believe that with a robust health information exchange infrastructure and improved communication among ACO participants and the ACO's neighboring health care providers, ACOs will be better equipped to access data in a timeframe that is closer to ''real time.'' Many ACOs are developing innovative solutions to share ''real time'' information across sites of care and are actively engaged, as are we, in the HHS-wide discussions currently underway.

However, we recognize that information from the CMS claims system could supplement an ACO's understanding of its patient population. Although we understand that ACOs would like to obtain data as services are performed, as we explained in the April 2011 proposed rule (76 FR 19558), there is an inherent lag between when a service is performed and when the service is submitted for payment in FFS Medicare. Thus, our inability to provide data in real time to ACOs is not due to our methodology for assigning beneficiaries to ACOs, and ACOs participating in the Shared Savings Program are unlike managed care plans where preauthorization may be required for services. Although there is a mechanism by which external entities such as ACOs and providers can verify the Medicare enrollment status of a beneficiary through the HIPAA Eligibility Transaction System (HETS), our preliminary analysis suggests that the HETS eligibility checks through do not reliably predict what services or when, how, or by whom a service may be furnished to a beneficiary with FFS Medicare. Therefore, we believe the HETS information would be of limited value to an ACO.

Comment: A commenter requested that CMS make the data reports provided to ACOs available to independent researchers to support additional analysis of the impact of the Shared Savings Program.

Response: We recognize the public interest in obtaining this type of information. For this reason, we have made a set of Shared Savings Program research identifiable files available through the Research Data Assistance Center (ResDAC). To learn more about these files visit the ResDAC Web site: *http://www.resdac.org/news/shared-savings-program-aco-research-identifiable-files/2015/01-0*.

2. Aggregate Data Reports and Limited Identifiable Data

a. Overview

Under § 425.702, we share aggregate reports with ACOs at the beginning of the agreement period based on beneficiary claims used to calculate the benchmark, each quarter thereafter based on the quarterly assignment window, and in conjunction with the annual reconciliation. The aggregate reports provided under § 425.702(a) and (b) contain certain de-identified beneficiary information including all of the following:

- Aggregated metrics on the ACO's preliminarily prospectively assigned beneficiary population, including characteristics of the assigned beneficiary population, the number of primary care services provided to the assigned beneficiary population by the ACO, and the proportion of primary care services provided to the assigned beneficiary population by ACO participants upon whom assignment is based.
- Expenditure data for the ACO's assigned beneficiary population by Medicare enrollment type (ESRD, disabled, aged/dual eligible, aged/non-dual eligible) and type of service (for example, inpatient hospital, physician, etc.).
- Utilization data on select metrics for the assigned population, such as ambulatory care sensitive conditions discharge rates per 1,000 beneficiaries for conditions such as congestive heart failure (CHF), and utilization rates for imaging, emergency department visits, hospitalizations, and primary care services.

In addition, under § 425.702(c), we also provide a report that includes certain beneficiary identifiable information about the beneficiaries who are preliminarily prospectively assigned to the ACO and whose data were used to generate the de-identified aggregate data reports. The information currently contained in this assignment report includes the beneficiary name, date of birth, HICN, and sex. These beneficiary identifiable data are made available to an ACO that has met the conditions previously discussed in detail for purposes of carrying out population-based activities related to improving health or reducing growth in health care costs, process development (such as care coordination processes), case management, and care coordination for the beneficiary population assigned to the ACO. Under § 425.708(d) these data points are not subject to the requirement that an ACO give beneficiaries an opportunity to decline claims data sharing.

As we stated in the proposed rule, feedback we received since the November 2011 final rule was issued and during implementation of the Shared Savings Program, has confirmed there is a strong desire among ACOs and their ACO participants and ACO providers/suppliers to have as much information about their patients as is possible, in as timely a manner as possible, to better coordinate care and target care strategies toward individual beneficiaries. Moreover, ACOs are actively using the reports provided under § 425.702 to conduct their health care operations work with the expectation that it will result in higher quality and more efficient care for their assigned beneficiary populations. However, ACOs and their ACO participants and ACO providers/

suppliers have also reported that the four data elements currently made available on the assignment reports severely limit their care redesign efforts. They have indicated that additional data elements are necessary in order to conduct health care operations work under the first or second paragraph of the definition of health care operations at 45 CFR 164.501. For example, an ACO reported that having data not only on the frequency of hospitalizations but also on which specific beneficiaries were hospitalized and in which specific hospitals would better enable it to identify the effectiveness and outcomes of its post-hospitalization care coordination processes. Some stakeholders have made suggestions for beneficiary identifiable data that should be included in the quarterly reports in addition to the current four data elements, such as risk profiles or information on whether the beneficiary had a hospital visit in the past year. Some stakeholders suggested that the report be expanded to include information not only for the beneficiaries who received a plurality of their primary care services from ACO professionals, but also for all FFS beneficiaries who received a primary care service from an ACO participant in the past year. These stakeholders stated that understanding the entire FFS patient population served by the ACO and its ACO participants would improve their ability to redesign care, and reduce the uncertainty associated with a list of preliminarily prospectively assigned beneficiaries that fluctuates from quarter to quarter, based on the population's use of primary care services.

b. Proposed Revisions

In the proposed rule, we considered what additional beneficiary identifiable data might be the minimum necessary to support the ACOs' health care operations work. Based on our discussions with ACOs and ACO participants and ACO providers/suppliers, we explained our belief that making additional information available to ACOs about the FFS beneficiaries they serve, including for example, on whether a beneficiary visited an emergency room or was hospitalized, would help support such efforts. Thus, we proposed to expand the information made available to ACOs under § 425.702(c) to include certain additional beneficiary identifiable data subject to the existing requirements of § 425.702(c)(2), which incorporates the requirements under HIPAA governing the disclosure of PHI. Specifically, in addition to the four data elements (name, date of birth, HICN, and sex) that we currently make available for preliminarily prospectively assigned beneficiaries, we proposed to expand the beneficiary identifiable information that is made available under existing § 425.702(c)(1) to include these data elements (name, date of birth, HICN, and sex) for each beneficiary who has a primary care service visit with an ACO participant that bills for primary care services that are considered in the assignment process in the most recent 12-month period.

Additionally, we proposed to expand the beneficiary identifiable information made available for preliminarily prospectively assigned beneficiaries to include additional data points. The information would be derived from the same claims used to determine the preliminary prospective assigned beneficiary list. Specifically, we proposed that we would make available the minimum data set necessary for purposes of the ACO's population-based activities related to improving health or reducing health care costs, required process development (under § 425.112), care management, and care coordination for its preliminarily prospectively assigned beneficiary population, at the following times:

- At the beginning of the agreement period.
- At the beginning of each performance year and quarterly thereafter.
- In conjunction with the annual reconciliation.

We stated that we would articulate the data elements associated with the minimum data set in operational guidance, and update as needed to reflect changes in the minimum data necessary for ACOs to perform these activities. The information would fall under the following categories:

- Demographic data such as enrollment status.
- Health status information such as risk profile, and chronic condition subgroup.
- Utilization rates of Medicare services such as the use of evaluation and management, hospital, emergency, and post-acute services, including dates and place of service.
- Expenditure information related to utilization of services.

We explained our belief that under this approach the data made available in the aggregate data reports under § 425.702(c) would generally constitute the minimum data necessary for covered entity ACOs or for ACOs serving as the business associate of their covered entity ACO participants and ACO providers/suppliers, to evaluate providers' and suppliers' performance, conduct quality assessment and improvement activities, and conduct population-based activities relating to improved health.

Finally, we noted in the proposed rule that these proposals for expansion of the data reports provided under § 425.702(c) to include each FFS beneficiary who has a primary care visit with an ACO participant that submits claims for primary care services that are considered in the assignment process, would apply only to ACOs participating in Tracks 1 and 2, where beneficiaries are assigned in a preliminarily prospective manner with retrospective reconciliation. This is because ACOs in Tracks 1 and 2 have an incentive to redesign care processes for all FFS beneficiaries who receive care from their ACO participants, due to the nature of the preliminarily prospective assignment methodology with retrospective reconciliation. Under our proposal for Track 3, which is discussed in detail in section II.F.3.a. of this final rule, we explained our belief that the minimum data necessary for ACOs to perform health care operations as defined under the first and second paragraphs of the definition of health care operations at 45 CFR 164.501, would not extend beyond data needed for health operations related to the prospective list of assigned beneficiaries. We expressed our belief that a prospective assignment approach incentivizes targeting of the specific FFS beneficiaries on the list for care improvement, rather than redesigning care processes for all FFS beneficiaries seen by the ACO participants. As such, the minimum data necessary required for Track 3 ACOs to perform health care operations work would be limited to the data for beneficiaries who are prospectively assigned for a performance year. Thus, for Track 3, we proposed to limit the beneficiary identifiable data included in the reports made available under § 425.702(c) to only those beneficiaries who appear on the ACO's prospective list of beneficiaries at the beginning of a performance year. Specifically, under our proposal, Track 3 ACOs would have access to beneficiary identifiable data elements associated with the list of categories under § 425.702(c) for beneficiaries prospectively assigned to the ACO, but would not be able to request any information related to other Medicare FFS beneficiaries who receive primary care services that are considered in the assignment process from ACO participants. We explained our belief that this limitation was

reasonable because, under Track 3, the prospectively assigned beneficiary list would encompass all beneficiaries for whom the ACO would be held accountable in a given performance year, in contrast to ACOs in Tracks 1 and 2 that would be held accountable for any FFS beneficiaries who choose to receive a plurality of their primary care services from ACO professionals billing through the TINs of ACO participants.

We sought comment on our proposal to expand the data set made available to ACOs under § 425.702(c). We sought comment on the categories of information that we proposed to include and on any other beneficiary identifiable information that should be offered in the aggregate reports provided under § 425.702(c) in order to allow ACOs as covered entities or as the business associate of their covered entity ACO participants and ACO providers/suppliers to conduct health care operations work under paragraphs one or two of the definition of health care operations at 45 CFR 164.501. We also specifically sought comment on our proposal to expand the list of beneficiaries for which data are made available under § 425.702(c) to ACOs participating in Track 1 and Track 2 to include all beneficiaries who had a primary care service visit with an ACO participant that submits claims for primary care services that are considered in the assignment process. We received a number of comments on these proposals. In general, there was overwhelming support for our proposal to expand the beneficiary identifiable information that is made available under existing § 425.702(c)(1) to include name, date of birth, HICN, and sex for each beneficiary who has a primary care service visit with an ACO participant that bills for primary care services that are considered in the assignment process in the most recent 12-month period. However, there were also suggestions on how we might improve the structure, content, and provision of both the de-identified and beneficiary identifiable information in the aggregate data reports made available under § 425.702.

Comment: Many commenters supported the proposed expansion of the beneficiary identifiable data made available to ACOs in the aggregate data reports. Numerous commenters made specific requests to expand the information made available under § 425.702(b) and (c) to include various other identifiable and de-identified data elements, including but not limited to:

- Beneficiary demographic information, including contact information.
- Beneficiary eligibility information, including the date of the beneficiary's original Medicare eligibility and the date of any change in eligibility status.
- Aggregate information about the expenditures and utilization rates of claims that are missing from the claims files, for example, for beneficiaries who have declined claims data sharing.
- Health status data, such as Hierarchical Condition Category (HCC) scores for each beneficiary or quarterly analysis showing changes in beneficiaries' HCC scores.
- An indicator of the beneficiary's institutional/hospice status.
- Substance abuse expenditure data (in aggregate).
- Expanded utilization information for primary care versus non-primary care services.
- Information about ancillary services.
- Information from Part D pharmacy claims.

Response: We appreciate the commenters' support for our proposal to expand the data made available to ACOs and we are finalizing our policy as proposed. We also appreciate the commenters' thoughtful suggestions regarding additional data elements that should be made available under § 425.702(b) and (c). Many of the specific suggestions to expand the data elements available to ACOs are already covered in the four categories of information that we proposed to include: Demographic data, health status information, utilization rates, and expenditure information related to utilization of services. Therefore, we will consider commenters' suggestions as we determine the specific data points to include in our program reports. We will articulate the data elements associated with the minimum data set in operational guidance and update as needed to reflect changes in the minimum data necessary for ACOs to perform health care operations activities. However, we note that although we are finalizing our proposal to make available health status information, such as risk profile and chronic condition subgroup, at this time we do not intend to release beneficiary identifiable HCC risk score data to ACOs participating in the Shared Savings Program because this is not information that CMS has historically shared through the MA program or any other model or demonstration. We believe that providing the risk profile and chronic condition subgroups associated with a beneficiary will be more helpful to ACOs in identifying higher acuity beneficiaries and beneficiaries with multiple chronic conditions that could benefit from more intensive care coordination. We note that receiving this information would not preclude an ACO from calculating HCC risk scores based on its own claims data and publicly available software. We also do not intend to release contact information for individual beneficiaries. As we are eliminating the option for ACOs to notify beneficiaries by mail regarding the opportunity to decline data sharing, we believe there is no need for CMS to share beneficiary contact information with ACOs.

Comment: Many commenters requested that we expand the availability of beneficiary identifiable data under § 425.702(c) to Track 3 ACOs beyond the list of beneficiaries prospectively assigned to the ACOs. Some commenters suggested that prospective assignment be applied to all three tracks, which would obviate the need to distribute information beyond this list. A commenter suggested that we include on the reports under § 425.702(c) beneficiaries who have had a primary care service visit with an ACO participant used in the assignment methodology within the past 24 months, instead of the previous 12 months.

Response: In section II.F.3. of this final rule, we are finalizing our proposal to assign beneficiaries prospectively to Track 3 ACOs. As discussed previously, we believe the minimum data necessary for Track 3 ACOs to perform health care operations as defined under the first and second paragraphs of the definition of health care operations at 45 CFR 164.501 would not extend beyond data needed for health care operations related to the prospective list of assigned beneficiaries because the prospective assignment list would encompass all beneficiaries for whom the ACO would be held accountable in a given performance year. Therefore, we will limit the information provided under § 425.702(c)(1)(ii)(A) and (c)(1)(ii)(B) to the Track 3 ACO's list of prospectively assigned beneficiaries. In addition, we believe it is important to provide information to ACOs participating in Tracks 1 and 2 about beneficiaries who have had at least one primary care service visit with an ACO participant that is used in the assignment methodology because, at the time of retrospective reconciliation, the ACO may be determined responsible for their care during the performance year. We believe a 12 month look-back is sufficient for these purposes, but we may revisit this issue in future rulemaking.

Comment: Many commenters requested that we provide detailed documentation regarding the definition

and calculation of each of the metrics in the reports provided under § 425.702(b) and examples of how these metrics can be calculated from the Claim and Claim Line Feed (CCLF) files. Commenters requested that we make available these calculations and examples to new ACOs prior to their start date in the Shared Savings Program. A commenter recommended that we use open source methods for all data and calculations in the Shared Savings Program. Another commenter suggested providing Shared Savings Program ACOs with the same summary reports given to Pioneer ACOs. Several commenters requested that we provide the aggregate reports under § 425.702 to ACOs in a user-friendly format or more often—for example, monthly. Several commenters requested that the quarterly reports include an update to the ACO's benchmark based on changing HCC scores and enrollment mix relative to the benchmark period.

Response: We recognize that certain reports provided under the Shared Savings Program, such as benchmark reports, are difficult to reproduce based on the claims data. However, our goal is to encourage transparency and understanding of these calculations, and we provide webinars and have developed other educational materials to help ACOs better understand the claims data files and other reports. At this time, we do not intend to share the software or source code used to create these reports with the public. However, we will continue to provide user guides, templates, and information packets detailing the metrics and valid data values contained in each of our program reports. These documents are available to ACOs shortly after they are accepted and agree to participate in the Shared Savings Program, and they are available in a user-friendly spreadsheet format. We will continue to work to improve the utility of these reports and will consider these comments as we do so. The quarterly aggregate reports we provide are based on the most recent 12 months of data. The quarterly reports are not calendar year reports; therefore, they do not provide benchmark calculations, which are developed based on the 3 calendar years prior to an ACO's agreement start date.

FINAL ACTION: We are finalizing our policies in § 425.702(c) as proposed. The existing requirements will continue to apply to aggregate reports generated for PY 2015, which will include any quarterly reports or annual reconciliation reports for PY 2015 generated during CY 2016. The new requirements will apply to reports that are generated for PY 2016, including any PY 2016 reports that are generated in CY 2015 or CY 2017. To ensure the timing of these reports is understood, we have retained the existing rules under § 425.702(c)(1)(i). The rules that apply for PY 2016 and subsequent performance years as finalized have been designated at § 425.702(c)(1)(ii). Specifically, for ACOs in Tracks 1 and 2, we are expanding the list of beneficiaries for which data are made available under § 425.702(c)(1) to include all beneficiaries who had a primary care service visit during the previous 12 months with an ACO participant that submits claims for primary care services that are considered in the assignment process. We are also expanding the beneficiary identifiable information made available for preliminarily prospectively assigned beneficiaries to include additional data points in the following categories: Demographic information, health status information, utilization rates of Medicare services, and expenditures related to utilization of services. We will articulate the data elements associated with the minimum data set in operational guidance and update as needed to reflect changes in the minimum data necessary for ACOs to perform health care operations activities. For Track 3 ACOs, the beneficiary identifiable data included in the reports made available under § 425.702(c) will be limited to the ACO's prospectively assigned beneficiaries.

3. Claims Data Sharing and Beneficiary Opportunity To Decline Claims Data Sharing

a. Overview

Because Medicare FFS beneficiaries have the freedom to choose their health care providers and suppliers, and are not required to receive services from providers and suppliers participating in the ACO, the patients of ACO participants and ACO providers/suppliers often receive care from other providers and suppliers that are not affiliated with the ACO. As a result, ACOs and their ACO participants and ACO providers/suppliers may not be aware of all of the services an assigned beneficiary is receiving. Furthermore, under Tracks 1 and 2, we perform a retrospective reconciliation at the end of each performance year to determine an ACO's assigned beneficiary population based on beneficiaries' use of primary care services using the assignment algorithm described at § 425.402 of the regulations. Therefore, under Tracks 1 and 2, it is often the case that an ACO's preliminary prospective assigned beneficiary list is not complete and does not include all the beneficiaries who would ultimately be assigned to the ACO at the end of the performance year—that is, all of the beneficiaries for which the ACO ultimately would be held accountable. As we discussed in the April 2011 proposed rule (76 FR 19558) and in the November 2011 final rule (76 FR 67844), we were concerned about ACOs' ability to do their work in the absence of information about services delivered outside of the ACO. We stated our belief at that time that it would be important to give ACOs appropriate access to a beneficiary's identifiable claims data when the beneficiary has received a primary care service billed through the TIN of an ACO participant, and is thus a candidate for assignment at the time of retrospective reconciliation for the performance year. We explained our belief that sharing beneficiary identifiable claims data would enable ACOs to better coordinate and target care strategies towards the individual beneficiaries seen by ACO participants and ACO providers/suppliers.

We ultimately concluded that the bases for disclosure under the HIPAA Privacy Rule were broad enough to cover our disclosure of Medicare Parts A and B claims data to ACOs for health care operations work when certain conditions are met. Similarly, we concluded that the Part D regulations governing the release of Part D data on prescription drug use would permit the release of Part D prescription drug event data to ACOs for purposes of supporting care coordination, quality improvement, and performance measurement activities. Thus, we concluded that we are permitted to disclose the minimum Medicare Parts A, B, and D data necessary to allow ACOs to conduct the health care operations activities that fall into the first or second paragraph of the definition of health care operations under the HIPAA Privacy Rule when such data is requested by the ACO as a covered entity or as the business associate of its covered entity ACO participants and ACO providers/suppliers. Accordingly, in the November 2011 final rule (76 FR 67851), we adopted a policy under which an ACO may request Part A and Part B claims data and Part D prescription drug event data for preliminarily prospectively assigned beneficiaries and other beneficiaries who receive primary care services from an ACO participant upon whom assignment is based. In accordance with the terms of the DUA that the ACO must enter into with CMS, data received from CMS under the data sharing provisions of the Shared

Savings Program may only be used for the purposes of clinical treatment, care management and coordination, quality improvement activities, and provider incentive design and implementation. In providing the claims data subject to these limitations, we explained our belief that we would ensure compliance with the requirements of the HIPAA Privacy Rule and the regulations governing the release of Part D data.

While the disclosure of claims data in this manner is within the bounds of the applicable laws, we also noted concerns about beneficiaries' interests in controlling access to their individually identifiable health information. Thus, even though we believed that we had legal authority to make the contemplated disclosures without the consent of beneficiaries, in the November 2011 final rule (76 FR 67849) we implemented the additional requirement at § 425.708 that ACOs offer beneficiaries an opportunity to decline to have their claims data shared with the ACO. We note that in the November 2011 final rule we discussed alternative approaches, such as requiring beneficiary opt-in prior to claims data sharing, however, as stated, we believe that either approach, done well, offers equivalent control for beneficiaries over their personal health information. Moreover, an opt-in would significantly increase paperwork burden. We therefore believe that an opt-out approach is sufficient and appropriate. As such, before requesting access to the beneficiary's data and as part of its broader activities to notify patients that their health care provider or supplier is participating in an ACO, the ACO is required to inform beneficiaries that the ACO may request access to their claims data, and give beneficiaries an opportunity to decline such claims data sharing.

Under the current process for allowing beneficiaries to decline claims data sharing, once the ACO formally requests beneficiary identifiable claims data through the application process, enters into a DUA with CMS, and begins its first performance year, the ACO must supply beneficiaries with a written notification explaining their opportunity to decline claims data sharing. Offering beneficiaries the opportunity to decline claims data sharing may take two forms under current § 425.708. First, if the ACO has formally requested beneficiary identifiable claims data as part of the application process, the ACO must notify each FFS beneficiary of the opportunity to decline claims data sharing when the beneficiary has his or her first visit with an ACO participant upon whom assignment is based. During this visit, the beneficiary must be provided with written notification informing him or her of the ACO provider/supplier's participation in the ACO and that the ACO may request claims information from CMS in order to better coordinate the beneficiary's care and for other health operations activities. This written notification contains template language created by CMS with the assistance of the Medicare Ombudsman's office and with input from beneficiaries, and explains the beneficiary's option to decline claims data sharing. Once the beneficiary has expressed a preference at the point of care, the ACO may immediately inform CMS of the beneficiary's data sharing preference. If the beneficiary has not declined data sharing, CMS makes that beneficiary's data available to an ACO.

However, we recognized that beneficiaries may not seek primary care services until later in the performance year. Because of this, we offered an alternative option to ACOs who meet the requirements for receiving beneficiary identifiable claims data. Under the alternative option, ACOs may contact beneficiaries via a mailed notification that is sent to all preliminarily prospectively assigned beneficiaries to notify them of their health care provider's participation in an ACO under the Shared Savings Program, and the ACO's intent to request beneficiary identifiable claims data. The mailed notification contains template language that was developed in conjunction with the Medicare Ombudsman's office with input from beneficiaries. If the beneficiary wishes to decline claims data sharing, the beneficiary is instructed to sign the mailed notification and return it to the ACO or call 1–800–Medicare directly. If the ACO chooses to contact beneficiaries via a mailed notification, rather than waiting to notify them at the point of care, the ACO must wait 30 days before submitting the beneficiary's preference and receiving access to the data for those beneficiaries who have chosen not to decline claims data sharing. The 30-day waiting period provides beneficiaries with an opportunity to mail back the notification or to call 1–800–Medicare before the ACO receives access to their claims data. In addition, in order to ensure transparency, beneficiary engagement and meaningful choice, the notification and opportunity to decline claims data sharing must be repeated at the beneficiary's first primary care visit with an ACO participant upon whom assignment is based (76 FR 67850 and 67851). Finally, in addition to the point of care and mailed notifications provided by ACOs, all Medicare FFS beneficiaries are notified through the Medicare & You Handbook about ACOs and the opportunity to decline claims data sharing by contacting CMS directly at 1–800–Medicare.

Once the ACO has notified the beneficiaries according to program rules, and any applicable wait periods are over, the ACO submits the beneficiaries' data sharing preferences to CMS. Beneficiary preferences submitted by ACOs are combined with preferences received by CMS through 1–800–Medicare. Based on these beneficiary preferences, we generate claims files containing the beneficiary identifiable claims data for beneficiaries who have not declined data sharing. These claims files are then made available for ACO access on a monthly basis.

Once a beneficiary has declined data sharing, the beneficiary may choose to reverse the decision by signing another form and sending it to the ACO (which in turn notifies CMS of the beneficiary's updated preference) or by calling 1–800–Medicare directly. We then include the beneficiary's claims data in the claims file provided to the ACO the following month.

In the November 2011 final rule (76 FR 67849), we acknowledged that it is possible that a beneficiary may decline to have his or her claims data shared with an ACO but would choose to continue to receive care from ACO participants and ACO providers/suppliers. In such a case, the ACO would still be responsible for that beneficiary's care, and, as such, although the beneficiary's claims data would not be shared with the ACO, CMS would continue to use the beneficiary's claims data in its assessment of the ACO's quality and financial performance.

In the November 2011 final rule (76 FR 67849 through 67850) we expressed our view that beneficiaries should be notified of their health care provider's participation in an ACO in order to have some control over who has access to their health information for purposes of the Shared Savings Program. We further indicated that the requirement that an ACO provider/supplier engage patients in a discussion about the inherent benefits, as well as the potential risks, of claims data sharing provided an opportunity for true patient-centered care and would create incentives for ACOs, ACO participants, and ACO providers/suppliers to develop positive relationships with each beneficiary under their care. Additionally, we stated

that this policy would provide ACO participants and ACO providers/suppliers the opportunity to engage with beneficiaries by explaining the Shared Savings Program and its potential benefits for both the beneficiaries and the health care system as a whole.

Since implementation of the Shared Savings Program, we have shared claims data on over 7 million beneficiaries with 375 Shared Savings Program ACOs. As we noted in the proposed rule, we have received informal feedback from ACOs that are putting into practice the claims data sharing notification requirements, and from beneficiaries who have received notifications from an ACO that wanted to request access to their claims data. We learned the following from this feedback:

- The option for ACOs to mail notifications and then conduct the in-office follow-up adds to ACOs' financial costs and delays their ability to access claims data in a timely manner. ACOs must wait until January 1 of their first performance year to send out mailings. After waiting the requisite 30 days, the earliest the ACO may submit beneficiary preferences to CMS is in February. The first set of claims data is then available in mid-March. In addition, some ACOs struggle with obtaining current mailing information for preliminarily prospectively assigned beneficiaries, which can delay the mailing of notifications to later in the performance year. Thus, the earliest opportunity for ACOs to receive claims data is mid-February, and that is only the claims data for beneficiaries who visited primary care providers in early January and were given the opportunity to decline claims data sharing at the point of care.
- Stakeholders, including ACOs, ACO participants, and ACO providers/suppliers, continually confuse the notification regarding the ACO's intent to request access to claims data with the separate requirement that all FFS beneficiaries must be notified of ACO participants' and ACO providers/suppliers' participation in the program. Beneficiaries must be notified at the point of care of the ACO participants' and ACO providers/suppliers' participation in an ACO, regardless of whether the ACO has requested or intends to request access to claims data.
- ACOs have commented that beneficiaries are confused about why their providers do not already have access to information regarding other care they may receive, which potentially erodes rather than strengthens the patient-provider relationship. Beneficiaries often assume their providers have all the information they need to care for them. However, as noted previously, the ACO, its ACO participants, and ACO providers/suppliers would not have claims data for services rendered outside the ACO, and would not necessarily have knowledge about that care.
- Beneficiaries that are preliminarily prospectively or prospectively assigned to an ACO can choose to receive care from any Medicare-enrolled provider or supplier, whether inside or outside the ACO, so beneficiaries may receive notices regarding data sharing from more than one ACO. This is most likely to occur in markets with high ACO penetration where a beneficiary may receive primary care services from several different ACO professionals, each participating in different ACOs. Beneficiaries report confusion, concern, and annoyance over receiving multiple mailings from ACOs, and question why their health care providers do not already have the information they need to appropriately coordinate their care.
- Beneficiaries receiving the notifications giving them the opportunity to decline claims data sharing may mistakenly believe the notification is a request to ''opt-out'' of ACO care or Medicare FFS, or both, or that they have been placed in a managed care plan without their consent.
- Beneficiaries who receive the letters in the mail notifying them of their provider's participation in an ACO and offering them the opportunity to decline claims data sharing often mistakenly believe that these letters are fraudulent and do not know what to do. Many ACOs are entities that have been newly formed by providers and suppliers for purposes of participating in the Shared Savings Program. While the beneficiary may have a strong relationship with his or her primary care provider, the beneficiary may not recognize the name of the newly formed ACO. Therefore the beneficiary may have concerns and question the legitimacy of the notification.
- Our most recent data indicate that approximately 3 percent of beneficiaries have declined claims data sharing.

As previously discussed, beneficiaries currently have the opportunity to decline claims data sharing by responding to the letters that ACOs send to their preliminarily prospectively assigned beneficiaries, by informing an ACO provider/supplier during a face-to-face primary care service visit, or by contacting 1–800–Medicare directly. We continue to be committed to offering beneficiaries some control over ACO access to their beneficiary identifiable information for purposes of the Shared Savings Program. However, in light of the feedback we received, we were motivated to review our claims data sharing policies and processes to determine what refinements we could make to mitigate the concerns raised by stakeholders regarding the burden imposed on both beneficiaries and those entities participating in the Shared Savings Program. We considered several aspects of our claims data sharing policies, including the use of various formats to communicate with beneficiaries regarding claims data sharing under the program such as: Mailed notifications to the list of preliminarily prospectively assigned beneficiaries by the ACO; face-to-face discussions with healthcare providers during primary care visits; and CMS' use of 1–800–Medicare and the Medicare & You Handbook. As discussed in the proposed rule, as well as the April 2011 proposed rule (76 FR 19558) and the November 2011 final rule (76 FR 67846), we are convinced by stakeholders that Medicare claims data provide an important supplement to the data to which the ACO and its ACO participants and ACO providers/suppliers already have access. Current law allows CMS to share certain beneficiary identifiable claims data with ACOs when those data are necessary for purposes of certain health care operations. HIPAA does not require that beneficiaries be presented with an opportunity to decline claims data sharing before their PHI can be shared. Moreover, several other CMS initiatives, including the Medicare Health Support demonstration, the Multi-Payer Advanced Primary Care Practice demonstration, the Physician Group Practice demonstration, and the Physician Group Practice Transition demonstration, have successfully shared claims data with providers in the absence of an opportunity for beneficiaries to decline claims data sharing. Therefore, we considered how to retain meaningful beneficiary choice in claims data sharing while reducing the confusion and burden caused by our current claims data sharing policies. As we stated in the proposed rule, we believe meaningful beneficiary choice in claims data sharing is maintained when the purpose and rationale for such claims data sharing are transparent and communicated to beneficiaries, and there is a mechanism in place for beneficiaries to decline claims data sharing. Thus, in revisiting our claims data sharing policies, we sought to maintain claims data sharing transparency and a mechanism for

beneficiaries to decline claims data sharing.

b. Proposed Revisions

Based on our experiences with data sharing under the Shared Savings Program to date, we proposed to modify our processes and policy for claims data sharing while remaining committed to retaining meaningful beneficiary choice over claims data sharing with ACOs. First, we proposed to provide beneficiaries with the opportunity to decline claims data sharing directly through 1–800–Medicare, rather than through the ACO. We noted that 1–800–Medicare has the capability for beneficiaries to use accessible alternative or appropriate assistive technology, if needed. We would continue to maintain a list of beneficiaries who have declined data sharing and ensure that their claims information is not included in the claims files shared with ACOs. Second, we proposed to provide advance notification to all FFS beneficiaries about the opportunity to decline claims data sharing with ACOs participating in the Shared Savings Program through CMS materials such as the Medicare & You Handbook. The Handbook would include information about the purpose of the program, describe the opportunity for ACOs to request beneficiary identifiable claims data for health care operations purposes, and provide instructions on how beneficiaries may decline claims data sharing by contacting CMS directly through 1–800–Medicare. The Handbook would also contain instructions on how a beneficiary may reverse his or her preference to decline claims data sharing by contacting 1–800–Medicare. Third, to reduce burden for both beneficiaries and ACOs, we proposed to remove the option for ACOs to mail notifications to beneficiaries and for beneficiaries to sign and return the forms to the ACO in order to decline claims data sharing. This process would be replaced by a simpler, direct process through notification at the point of care and through 1–800–Medicare as described previously.

We also proposed to continue to require that ACO participants notify beneficiaries in writing at the point of care that their providers and suppliers are participating in the Shared Savings Program as required under § 425.312(a). We proposed that ACO participants would continue to be required to post signs in their facilities using required template language. Rather than requiring ACO participants furnishing primary care services to provide a written form regarding claims data sharing to all beneficiaries who have a primary care service office visit, we proposed to update the required notification template language for these signs to include information regarding claims data sharing. We would update the template language with the assistance of the Medicare Ombudsman's Office and beneficiary input to inform beneficiaries about both the Shared Savings Program and also that the ACO may request access to beneficiary identifiable claims data from CMS in order to perform health care operations as defined under the first and second paragraphs of the definition of health care operations at 45 CFR 164.501. The signs would also provide beneficiaries with information about their opportunity to decline this data sharing and instructions to call 1–800–Medicare if they would prefer that we not share their claims data with an ACO and its ACO participants and ACO providers/suppliers. The signs would likewise include instructions for how beneficiaries may reverse their decision to decline claims data sharing through 1–800–Medicare, if they determine in the future they would prefer to have their claims data made available to ACOs and their ACO participants and ACO providers/suppliers. Because ACO participants are required to post these signs in their facilities at all times, this written notification through the signs would occur at each visit, including the first visit the beneficiary has with an ACO participant during a performance year.

We also noted in the proposed rule that we anticipate that some beneficiaries may continue to want to have the ability to take the information home or into their visit with their primary care provider for further discussion. Therefore, in addition to the signs, we proposed to retain our policy that ACO participants that submit claims for primary care services used to determine the ACO's assigned beneficiary population be required to make a separate written notification form available to the beneficiary upon request. We proposed to modify §§ 425.312 and 425.708 for clarity and to reflect these revised notification policies.

Finally, under Tracks 1 and 2, we proposed to make beneficiary identifiable claims data available in accordance with applicable law on a monthly basis for beneficiaries who are either preliminarily prospectively assigned to the ACO based on the quarterly assignment window or who have received a primary care service from an ACO participant upon whom assignment is based. Because Tracks 1 and 2 use a preliminary prospective assignment methodology with retrospective reconciliation, we stated our belief that ACOs, ACO participants, and ACO providers/suppliers in Tracks 1 and 2 would benefit from access to beneficiary identifiable claims information for all FFS beneficiaries who may be assigned to the ACO at the end of the performance year. In contrast, under Track 3, we proposed to make beneficiary identifiable claims data available only for beneficiaries who are prospectively assigned to an ACO, because the beneficiaries on the prospective assignment list are the only beneficiaries for whom the ACO would be held accountable at the end of the performance year. Consistent with the existing requirements at § 425.704, in order to request beneficiary identifiable claims data, and regardless of track, an ACO must do all of the following:

- Certify that it is a covered entity or the business associate of a covered entity that has provided a primary care service to the beneficiary in the previous 12 months.
- Enter into a DUA with CMS prior to the receipt of these beneficiary identifiable data.
- Submit a formal request to receive beneficiary identifiable claims data for such beneficiaries at the time of application to the Shared Savings Program.
- Certify that the request reflects the minimum data necessary for the ACO to conduct either its own health care operations work that falls within the first or second paragraph of the definition of health care operations at 45 CFR 164.501 or health care operations work on behalf of its ACO participants and ACO providers/suppliers that are covered entities (as the business associate of these covered entities) that falls within the first or second paragraph of the definition of health care operations at 45 CFR 164.501.

We explained our belief that these proposed modifications to our data sharing rules would significantly improve the claims data sharing process. First, we stated our belief that the modified process would reduce burden for beneficiaries who would no longer have to mail back forms. In addition, it would minimize beneficiary confusion in situations where an ACO may be newly formed and may not yet have established a relationship with the beneficiary. Instead, the beneficiary would be able decline claims data sharing, and reverse a decision to decline claims sharing, by contacting CMS directly using 1–800–Medicare. We stated our belief that beneficiaries would be more comfortable expressing

their claims data sharing preferences directly through CMS, an agency with which beneficiaries have an existing relationship. Moreover, we stated our belief that our proposals would streamline ACO operations and would allow ACOs to access beneficiary identifiable claims data earlier in the performance year than is possible under our current policies. Beneficiary identifiable claims data would still be available on a monthly basis, but the new process would be operationally more efficient and less expensive for ACOs. By removing the 30-day delay before ACOs may request beneficiary identifiable claims data for their preliminarily prospectively assigned beneficiaries under Tracks 1 and 2 and prospectively assigned beneficiaries under Track 3, and reducing operational complexities associated with providing these data, ACOs would have access to beneficiary identifiable claims data in a more timely fashion. This could allow ACOs to intervene in the care of beneficiaries earlier during the performance year. In addition, as discussed previously, while we initially believed that requiring ACOs to notify beneficiaries of the opportunity to decline claims data sharing would improve engagement between ACO providers/suppliers that furnish primary care services and their patients, we realized that this policy unintentionally created burden and confusion for both ACOs and beneficiaries, as many beneficiaries assume that their health care providers already have the information needed to optimally coordinate their care, even though this is not always the case. We stated our belief that the proposed revisions to our claims data sharing policy would reduce beneficiary confusion about the Shared Savings Program and the role an ACO plays in assisting the beneficiary's health care providers to improve their health and health care experience, while still retaining a beneficiary's meaningful opportunity to decline claims data sharing.

We also noted in the proposed rule that, since implementation of the program, a small percentage of FFS beneficiaries have requested that their identifiable claims data not be shared and have done so either by notifying the ACO or by contacting 1–800–Medicare to decline claims data sharing. We stated that none of our proposed revisions would have any effect on any existing beneficiary preferences. Previously recorded beneficiary preferences would continue to be honored, unless and until a beneficiary changes his or her preference by contacting 1–800–Medicare. Accordingly, we noted that our proposal not only would preserve the beneficiary's ability to decline claims data sharing by directly contacting CMS, but it also would have no effect on existing beneficiary claims data sharing preferences, unless the beneficiary subsequently amends his or her preferences to allow claims data sharing.

We noted that the beneficiary identifiable information that is made available under § 425.704 would include Parts A, B and D data, but would exclude any information related to the diagnosis and treatment of alcohol or substance abuse. As we discussed in the April 2011 proposed rule (76 FR 19557), 42 U.S.C. 290dd–2 and the implementing regulations at 42 CFR part 2 restrict the disclosure of patient records by federally conducted or assisted substance abuse programs. Such data may be disclosed only with the prior written consent of the patient, or as otherwise provided in the statute and regulations. We stated that we may revisit this approach as technology in the area of consent management advances.

We sought comment on these proposals, as well as other specific modifications that could be made to our existing policies on data sharing to improve the ability of ACOs to access beneficiary identifiable claims data, and to reduce burden and confusion for ACOs, ACO participants, ACO providers/suppliers, and beneficiaries. We received many comments regarding these proposals.

Comment: Commenters supported our proposal to provide beneficiaries the opportunity to decline claims data sharing directly through 1–800–MEDICARE, rather than through the ACO. Stakeholders commented that the proposed modifications to the claims data sharing process would result in ACOs obtaining claims data sooner; which would allow certain services such as care coordination activities to begin much sooner in the program year. Commenters noted that the modified process would negate the cumbersome process that is currently used by ACOs to track and maintain beneficiary opt out preferences as well as the monthly file transfers of those preferences between the ACO and CMS. A few commenters stated that 1–800–MEDICARE should not be the sole method for a beneficiary to decline data sharing. A commenter suggested developing a Web site that beneficiaries could use to decline claims data sharing electronically.

Response: We appreciate the strong support for our proposals to simplify both the process for beneficiaries to decline claims data sharing and the process for ACOs to notify beneficiaries about this opportunity. We agree with commenters that the modified process will result in the ACO obtaining claims information earlier than is currently possible, which could in turn allow the ACO to intervene in a beneficiary's care earlier in the performance year. However, we do not believe that ACOs should wait for this data before implementing appropriate care coordination and other processes as required under the program rules. We note that defining certain required processes under § 425.112, including processes to coordinate care, and promote evidence-based medicine and patient engagement, and having these processes in place is a requirement for program eligibility. We believe that using 1–800–MEDICARE is an efficient and effective way for beneficiaries to let CMS know directly that they wish to decline claims data sharing because beneficiaries are accustomed to contacting 1–800 Medicare with questions and comments. In addition, 1–800–MEDICARE is staffed with customer service representatives who can answer questions beneficiaries may have about ACOs and claims data sharing. We are finalizing this simplified process for declining claims data sharing and we anticipate it will reduce ACO and beneficiary burden and confusion. Finally, we recognize that although most current beneficiaries are used to contacting 1–800 Medicare with questions and comments, use of the internet and smart phones is becoming ubiquitous, and a new generation of computer-savvy baby-boomers is now becoming eligible for Medicare. Therefore, we will explore whether to establish in the future alternate means by which beneficiaries can elect to decline claims data sharing, such as, for example, through an appropriately secure transaction via the Internet.

Comment: Commenters were supportive of the proposal to notify FFS beneficiaries about the opportunity to decline claims data sharing with ACOs participating in the Shared Savings Program through CMS materials such as the Medicare & You Handbook. Several commenters suggested that CMS take the opportunity to revise and redesign CMS publications to incentivize healthy behaviors and encourage beneficiary engagement with ACOs.

Several commenters stated that CMS should not continue to require ACO participants to provide written notification of their participation in the

Shared Savings Program at the point of care, including notification of the opportunity to decline claims data sharing. However, a few commenters supported the requirement for the ACO and its providers and suppliers to provide written notification at the point of care regarding their participation in the program and the beneficiary's ability to seek care from any FFS provider and the opportunity to decline claims data sharing. A few commenters suggested that CMS require ACOs to develop language for the notifications that would clearly describe why and how the beneficiary's health information would be stored, exchanged, used and protected, along with the beneficiary's opportunity to decline claims data sharing. A commenter suggested that the notification language clearly identify the type of data sharing that would be subject to the opt-out.

A few commenters stated that our proposals should not preclude providers from actively engaging in conversations with beneficiaries regarding the sharing of their claims data and how their claims data will be utilized and stored, or from providing relevant publications regarding beneficiary opt-out opportunities.

Response: We encourage ACOs to work with their ACO participants and ACO providers/suppliers to fully engage their FFS beneficiary population. Also, under the modified beneficiary notification and opportunity to decline data sharing processes, which we are finalizing, we will continue to make available written information for ACO participants to give to beneficiaries at the point of care, which explains what an ACO is and what beneficiaries can expect when their providers are ACO providers/suppliers participating in an ACO. These materials are available to all participating ACOs through the ACO portal.

Additionally, we agree with commenters that ACOs and their participating providers and suppliers should be required at the point of care and in writing to notify beneficiaries of their participation in the program and to provide an opportunity for beneficiaries to decline data sharing. We believe the transparency provided by such notification is important. For this reason, we are also finalizing our proposal that beneficiaries be notified in writing by Medicare regarding the Shared Savings Program and the opportunity to decline claims data sharing in accordance with § 425.708 and by the ACO participant at the point of care that their ACO providers/suppliers are participating in the Shared Savings Program and the opportunity to decline data sharing in accordance with § 425.312. With respect to the comment about ACOs providing detailed notification about how they handle beneficiary health information, we note that the HIPAA Privacy Rule requires covered entities, including covered health care providers, to provide a notice of privacy practices that describes how they may use and disclose PHI and the individual's rights with respect to PHI. (See 45 CFR 164.520.) Therefore, we believe healthcare providers should already be providing information that describes how beneficiary's health information may be used and disclosed and is protected under the HIPAA Privacy Rule.'

Furthermore, we believe the information contained in the Medicare & You Handbook and the signs posted in ACO participant facilities will prompt beneficiaries to ask questions and engage with their providers concerning their provider's participation in an ACO and the beneficiary's opportunity to decline data sharing. We do not believe these policies will limit or impede a provider's ability or opportunity to engage with beneficiaries at the point of care, and we encourage ACO participants to speak with their beneficiaries about the Shared Savings Program and claims data sharing, including how the ACO uses, stores, and accesses beneficiary data.

Comment: A commenter requested that CMS develop and share with ACOs a list of beneficiaries who have declined to share their claims data, and that CMS analyze this list for the overall impact on the Shared Savings Program.

Response: Currently, for an ACO receiving CCLFs, we provide a monthly file that indicates what beneficiaries have declined data sharing and have held webinars to explore the impact of withheld claims. We intend to continue to provide that information under the new process implemented as a result of this final rule. Additionally, we intend to continue educating ACOs through webinars and other methods regarding the impact of withheld claims.

Comment: Commenters made suggestions related to the type and format of claims data that we share with ACOs, including that CMS:

- Eliminate the suppression of claims data related to alcohol and substance abuse diagnosis and treatment.
- Include a beneficiary demographic file in the monthly claim line feeds.
- Establish a test file process where changes to data sets can be provided in a test file to an ACO in advance of these changes being incorporated into the live claim feeds.

Response: We noted in the proposed rule that the beneficiary identifiable information that is made available under § 425.704 will include Parts A, B and D data, but will exclude any information related to the diagnosis and treatment of alcohol or substance abuse. As we discussed in the April 2011 proposed rule (76 FR 19557), 42 U.S.C. 290dd–2 and the implementing regulations at 42 CFR part 2 restrict the disclosure of patient records by federally conducted or assisted substance abuse programs. Such data may be disclosed only with the prior written consent of the patient, or as otherwise provided in the statute and regulations. We also noted in the proposed rule, as well as the November 2011 final rule (76 FR 67844), that we expect ACOs will have, or will be working towards having, processes in place to independently identify and produce the data they believe are necessary to best evaluate the health needs of their patient population, including the desired beneficiary demographic data. A robust health information exchange infrastructure and improved communication among ACO participants and the ACO's neighboring health care providers could also result in better access to beneficiary demographic data. We believe the ACO professionals who are providing the plurality of a beneficiary's primary care services have the most up-to-date data. To assist ACOs in identifying the best sources for beneficiary medical record data', we provide the ACO with the TIN and NPI of the ACO participant and ACO professionals that provided the most recent primary care service to the beneficiary on each quarterly report. We also make mock CCLF files available to all ACOs that are eligible to receive claims data. Whenever we make modifications to the CCLF file layouts, we update and supply these mock files to ACOs before we make modifications to the CCLF file layouts.

Comment: Several commenters requested that we make claims data sharing 'automatic' for prospectively assigned beneficiaries and not dependent on an ACO's request for data. Commenters suggested that claims data should be made available for all beneficiaries that are eligible for assignment to an ACO. A commenter requested that CMS provide 3 years of claims data prior to the start of an agreement period rather than the most recent 12-month period at the start of the agreement period.

Response: As we discussed in detail in the December 2014 proposed rule and

the April 2011 proposed rule, we have concluded that we are permitted to disclose the minimum Medicare Parts A, B, and D data necessary to allow ACOs to conduct the health care operations activities that fall into the first or second paragraph of the definition of health care operations under the HIPAA Privacy Rule when such data is requested by the ACO as a covered entity or as the business associate of its covered entity ACO participants and ACO providers/suppliers. Since CMS requires a request to ensure the ACO has met the applicable HIPAA conditions for disclosure, our provision of claims data to ACOs cannot be 'automatic.' ''Consistent with the existing requirements at § 425.704, in order to request beneficiary identifiable claims data, and regardless of track, an ACO must take all of the following steps:

- Certify that it is a covered entity or the business associate of a covered entity that has provided a primary care service to the beneficiary in the previous 12 months.
- Enter into a DUA with CMS prior to the receipt of these beneficiary identifiable data.
- Submit a formal request to receive beneficiary identifiable claims data for such beneficiaries at the time of application to the Shared Savings Program.
- Certify that the request reflects the minimum data necessary for the ACO to conduct either its own health care operations work that falls within the first or second paragraph of the definition of health care operations at 45 CFR 164.501 or health care operations work on behalf of its ACO participants and ACO providers/suppliers that are covered entities (as the business associate of these covered entities) that falls within the first or second paragraph of the definition of health care operations at 45 CFR 164.501.

Thus, the ACO's formal request to receive data is accomplished at the time of its application to the Shared Savings Program and does not delay the receipt of claims data.

We proposed and are finalizing a policy under Tracks 1 and 2 to make beneficiary identifiable claims data available in accordance with applicable law on a monthly basis for beneficiaries who are either preliminarily prospectively assigned to the ACO or who have received a primary care service from an ACO participant upon whom assignment is based during the most recent 12-month period. Because Tracks 1 and 2 use a preliminary prospective assignment methodology with retrospective reconciliation, we believe that ACOs, ACO participants, and ACO providers/suppliers in Tracks 1 and 2 will benefit from access to beneficiary identifiable claims information for all FFS beneficiaries who may be assigned to the ACO at the end of the performance year. Furthermore, we believe this policy is consistent with commenters' desire to have access to claims information for a majority of beneficiaries that are eligible to be assigned to the ACO. In contrast, under Track 3, we proposed to make beneficiary identifiable claims data available only for beneficiaries who are prospectively assigned to an ACO, because the beneficiaries on the prospective assignment list are the only beneficiaries for whom the ACO will be held accountable at the end of the performance year.

With respect to the comment about providing 3 years of claims data prior to the start of the agreement period, we continue to believe providing the most recent 12 months of claims data prior to the start of the agreement period is appropriate and sufficient to allow ACOs to coordinate care for their patient population. Our proposals were not intended to revise or extend the ''look back'' for claims data that we currently provide to ACOs for beneficiaries who have not declined claims data sharing. We also have concerns that expanding the look back period from 12 months prior to the agreement period to 3 years as suggested by the commenter will create barriers for some ACOs because stakeholders have told us that the current CCLF files are large and require sophisticated systems to accept even the 12-months' worth of claims data we provide.

FINAL ACTION: We are finalizing our claims data sharing policies as proposed. Specifically, we are finalizing our proposal in § 425.704 to begin sharing beneficiary identifiable claims data with ACOs participating under Tracks 1 and 2 that request claims data on beneficiaries who are included on their preliminary prospective assigned beneficiary list or that have received a primary care service from an ACO participant upon whom assignment is based during the most recent 12-month period, at the start of the ACO's agreement period, provided all other requirements for claims data sharing under the Shared Savings Program and HIPAA regulations are met. In addition, we are finalizing our proposal to share beneficiary identifiable claims data with ACOs participating under Track 3 that request beneficiary identifiable claims data on beneficiaries who are included on their prospectively assigned beneficiary list. These changes are effective January 1, 2016 in order to give ACOs in the middle of their 3-year participation agreements some time to make necessary adjustments in light of the new rules. For example, ACOs may need to improve their ability to accept larger amounts of claims data. ACOs will also need some time to finalize the collection and notification to CMS of any beneficiary notifications mailed prior to November 1. The timing will also coincide with a new cohort of ACOs and the issuance of the 2016 Medicare & You Handbook that will notify beneficiaries of the opportunity to decline claims data sharing through 1–800 Medicare. We are finalizing our proposed modifications to § 425.708 to reflect the streamlined process by which beneficiaries may decline claims data sharing. We are finalizing our proposals in § 425.312(a) and § 425.708 to require ACO participants to use CMS-approved template language to notify beneficiaries regarding participation in an ACO and the opportunity to decline data sharing. We are also finalizing our proposal in § 425.708(c) to honor any beneficiary request to decline claims data sharing that is received under § 425.708 until such time as the beneficiary may reverse his or her claims data sharing preference to allow data sharing. These changes are effective November 1, 2015, to enable ACOs that choose to mail notifications under the current requirements to mail notifications to beneficiaries up until the end of October; permit the 30-day window for ACOs to receive notifications from beneficiaries that choose to decline claims data sharing; and give ACOs one last opportunity to notify CMS, in turn, of 'beneficiaries' preferences in December 2015.

E. Assignment of Medicare FFS Beneficiaries

1. Background

Section 1899(c) of the Act requires the Secretary to ''determine an appropriate method to assign Medicare fee-for-service beneficiaries to an ACO based on their utilization of primary care services provided under this title by an ACO professional described in paragraph (h)(1)(A).'' Section 1899(h)(1)(A) of the Act constitutes one element of the definition of the term ''ACO professional.'' Specifically, this provision establishes that ''a physician (as defined in section 1861(r)(1) of the Act)'' is an ''ACO professional'' for purposes of the Shared Savings Program. Section 1861(r)(1) of the Act in turn defines ''physician'' as ''a doctor of medicine or osteopathy legally authorized to practice medicine and surgery by the State in which he

performs such function or action''. In addition, section 1899(h)(1)(B) of the Act defines ''ACO professional'' to include practitioners described in section 1842(b)(18)(C)(i) of the Act, such as physician assistants (PAs) and nurse practitioners (NPs).

As we explained in the November 2011 final rule (76 FR 67851), the term ''assignment'' refers only to an operational process by which Medicare determines whether a beneficiary has chosen to receive a sufficient level of the requisite primary care services from physicians associated with a specific ACO so that the ACO may be appropriately designated as exercising basic responsibility for that beneficiary's care. Consistent with section 1899(b)(2)(A) of the Act, an ACO is held accountable ''for the quality, cost, and overall care of the Medicare fee-for-service beneficiaries assigned to it.'' The ACO may also qualify to receive a share of any savings that are realized in the care of these assigned beneficiaries due to appropriate efficiencies and quality improvements that the ACO may be able to achieve. The term ''assignment'' for purposes of the Shared Savings Program in no way implies any limits, restrictions, or diminishment of the rights of Medicare FFS beneficiaries to exercise freedom of choice in the physicians and other health care providers and suppliers from whom they receive their services.

In developing the process for assigning Medicare beneficiaries to ACOs, in addition to the definition of an ACO professional (76 FR 67851), we also considered the following elements:

- The operational definition of an ACO (see the discussion of the formal and operational definitions of an ACO in section II.B. of this final rule) so that ACOs can be efficiently identified, distinguished, and associated with the beneficiaries for whom they are providing services.
- The definition of primary care services for purposes of determining the appropriate assignment of beneficiaries.
- Whether to assign beneficiaries to ACOs prospectively, at the beginning of a performance year on the basis of services rendered prior to the performance year, or retrospectively, on the basis of services actually rendered by the ACO during the performance year.
- The proportion of primary care services that is necessary for a beneficiary to receive from an ACO in order to be assigned to that ACO for purposes of this program.

In the November 2011 final rule (76 FR 67851 through 67870), we finalized the methodology that we currently use to assign beneficiaries to ACOs for purposes of the Shared Savings Program. Beneficiaries are assigned to a participating ACO using the assignment methodology in part 425, subpart E of our regulations. In addition, since the final rule was issued, we have provided additional guidance and more detailed specifications regarding the beneficiary assignment process in operational instructions which are available to the public on the CMS Web site. (*http://www.cms.gov/Medicare/Medicare-Fee-for-Service-Payment/sharedsavingsprogram/Financial-and-Assignment-Specifications.html*).

In this section of this final rule, we summarize certain key policies and methodological issues to provide background for several revisions to the assignment methodology that we proposed based on our initial experiences with the program and questions from stakeholders.

2. Basic Criteria for a Beneficiary To Be Assigned to an ACO

As discussed in detail in the proposed rule (79 FR 72791 and 72792) and consistent with previous guidance (see guidance at *http://www.cms.gov/Medicare/Medicare-Fee-for-Service-Payment/sharedsavingsprogram/Downloads/Shared-Savings-Losses-Assignment-Spec-v2.pdf.*), we proposed to add a new provision at § 425.401(a) of the regulations to outline the criteria that a beneficiary must meet in order to be eligible to be assigned to an ACO. Specifically, we proposed that a beneficiary would be eligible to be assigned to a participating ACO, for a performance year or benchmark year, if the beneficiary meets all of the following criteria during the assignment window (defined in section II.F. of this final rule as the 12-month period used for assignment):

- Has at least 1 month of Part A and Part B enrollment and does not have any months of Part A only or Part B only enrollment.
- Does not have any months of Medicare group (private) health plan enrollment.
- Is not assigned to any other Medicare shared savings initiative.
- Lives in the U.S. or U.S. territories and possessions as determined based on the most recent available data in our beneficiary records regarding the beneficiary's residence at the end of the assignment window.

If a beneficiary meets all of the criteria in § 425.401(a), then the beneficiary would be eligible to be assigned to an ACO in accordance with the two-step beneficiary assignment methodology in § 425.402 and § 425.404. We also proposed to make a conforming change to § 425.400 to reflect the addition of this new provision. We sought comment on our proposal.

Comment: Commenters generally agreed that the proposed beneficiary eligibility criteria are consistent with the statute, and agreed that their explicit inclusion within the regulations would help to promote a clearer understanding of the assignment process for purposes of such operations as benchmarking, preliminary prospective assignment (including quarterly updates), retrospective reconciliation, and prospective assignment.

Response: We agree that revising the regulations to include these eligibility criteria will help promote understanding of the assignment methodology. We are also make a conforming change to § 425.400 to clarify that the assignment methodology applies for purposes of benchmarking, preliminary prospective assignment (including quarterly updates), retrospective reconciliation, and prospective assignment.

Comment: A number of commenters suggested additional criteria such as removing the beneficiary if he/she moves from the ACO's service region or otherwise lives in two or more geographic locations during the year. Some commenters requested a policy that geographically defines and pre-identifies the target population for ACOs willing to take financial risk. Commenters suggested such a policy could be defined by distance based on miles, out of state residence, or if one of these geographic factors is combined with attribution, on a limited number of attributing services billed over a short period of time. To illustrate, some commenters suggested that to be eligible for ACO assignment, beneficiaries should receive a large majority (for example, 75 to 95 percent) of their qualified primary care services delivered in the ACO's service area. Another commenter suggested that CMS implement a beneficiary assignment appeals process to allow for removal of beneficiaries from assignment to an ACO if they meet certain conditions such as move out of the area or select a new non-ACO physician. These commenters believe that ACOs should not be financially accountable for patients who live outside of their service area, such as those who move during the year or otherwise live in two or more geographic locations during the year. In such cases, commenters noted that it may be difficult for the ACO to which the patient is assigned to manage effectively the beneficiary's care throughout the year. In addition, that

ACO will be held accountable for the cost and quality of the care provided to the beneficiary in the alternate location, which may have different standards of practice. A few commenters requested that beneficiaries who opt out of sharing their data should also not be assigned to an ACO.

Response: We greatly appreciate the varied suggestions for additional criteria for excluding beneficiaries from assignment. We explored some of these suggestions and performed an initial analysis on the specific suggestion for removal of beneficiaries who move out of the ACO's service area and determined there is a very small number of beneficiaries who will meet the criteria for exclusion on this basis, and these beneficiaries will not represent a significant portion of the ACO's list. We further point out that for Tracks 1 and 2, beneficiaries who move may drop off an ACO's assignment list since the lists are retrospectively reconciled. Under Tracks 1 and 2, a beneficiary only gets retrospectively assigned to an ACO if he/she received a plurality of primary care services from ACO professionals at the ACO. Therefore, we believe the ACO can reasonably be held accountable for the overall cost and quality of the care furnished to that beneficiary during that performance year. This policy has an additional advantage of providing an incentive for ACOs to coordinate care and provide for an appropriate hand-off when beneficiaries move out of their service area. Likewise, we believe that continuing to include those beneficiaries who have not permanently moved, but who otherwise live in two or more geographic locations during the year, on the ACO's assignment list during the performance year provides an excellent opportunity for ACOs to make sure the care for such beneficiaries is coordinated. Finally, regarding the suggestion that beneficiaries who opt out of sharing their data should not be assigned to an ACO, we believe the assignment methodology adequately indicates which beneficiaries should be assigned to an ACO on the basis of the primary care services furnished by ACO professionals. In addition, ACOs will have their own clinical information about the patient that they may share and use as permitted by HIPAA and other applicable laws. Therefore, we believe the beneficiary should remain assigned to the ACO even if the beneficiary does not choose to permit us to disclose his/her PHI in the form of claims data. We intend to monitor and assess the impact of not excluding these beneficiaries from assignment and, if appropriate, may consider making adjustments in future rulemaking.

Comment: A commenter suggested exclusion of Medicare beneficiaries who are already deceased at the time of their initial assignment to an ACO. The commenter stated that ACOs are prevented from coordinating the care of these beneficiaries and from learning from their claims experience. The commenter noted that this is a critical issue because many studies have shown that Medicare beneficiaries spend a disproportionate share of their lifetime medical expenses in the last few months of life. The commenter believes that assigning such beneficiaries to an ACO is an unfair burden on their financial performance under the Shared Savings Program and their fair opportunity to earn shared savings.

Response: We appreciate this comment. However, we are not revising the program's assignment methodology to remove beneficiaries with a date of death during the assignment window. Including beneficiaries with a date of death during the assignment window helps to reduce the introduction of actuarial bias when comparing the ACO's benchmark and performance year expenditures. Beneficiaries who are deceased will only be assigned to an ACO under either a prospective or retrospective assignment methodology if the ACO had previously been treating the beneficiary and providing the beneficiary's plurality of primary care services. Further, a purpose of sharing the preliminary list of assigned beneficiaries is to give the ACO information about their Medicare FFS patient population. On the reports we give to ACOs, we indicate if a beneficiary is deceased. The ACO can learn about the beneficiary's experience by seeking information from both the ACO providers/suppliers as well as any of the beneficiary's other Medicare-enrolled providers and suppliers that cared for the beneficiary during the assignment window to the extent permitted by HIPAA and other applicable laws, and by reviewing the monthly beneficiary-identifiable claims line feeds (if the ACO properly requested these data). We believe it is' better to include deceased beneficiaries for the sake of completeness. Further, we do not believe it is unfair to the ACO because such beneficiaries are represented in both benchmark and performance years. Accordingly, we believe it is appropriate that ACOs be held accountable for beneficiaries who pass away during a performance year.

Comment: A few commenters suggested that the criterion that a beneficiary not have any months of Medicare group (private) health plan enrollment during the assignment window be revised to not more than 3 to 6 months, to account for certain situations where beneficiaries, such as dual eligible, might change, enroll in or disenroll from plans more frequently. This would allow such beneficiaries to remain attributed to the ACO.

Response: Section 1899(c) of the Act requires the Secretary to ''determine an appropriate method to assign Medicare fee-for-service beneficiaries to an ACO''. As required by section 1899(c) of the Act, and consistent with the definition of Medicare FFS beneficiary in section 1899(h)(3) of the Act § 425.20 of the regulations, only beneficiaries enrolled in traditional Medicare FFS under Parts A and B are eligible to be assigned to an ACO participating in the Shared Savings Program. We believe our current policy is consistent with these requirements because under our current approach, only beneficiaries enrolled in traditional Medicare FFS under Parts A and B throughout the full performance year are eligible to be assigned to an ACO, and therefore, we will not revise the policy at this time. However, we plan to consider this issue further and we may address this issue in future rulemaking.

FINAL ACTION: We are finalizing our proposal to codify the criteria that a beneficiary must meet in order to be eligible to be assigned to an ACO. Specifically, a beneficiary will be eligible to be assigned to an ACO, for a performance year or benchmark year, if the beneficiary meets all of the following criteria during the assignment window:

- Has at least 1 month of Part A and Part B enrollment and does not have any months of Part A only or Part B only enrollment.
- Does not have any months of Medicare group (private) health plan enrollment.
- Is not assigned to any other Medicare shared savings initiative.
- Lives in the U.S. or U.S. territories and possessions as determined based on the most recent available data in our beneficiary records regarding the beneficiary's residence at the end of the assignment window.

We are also finalizing our proposal to add a new provision at § 425.401(a) of the regulations outlining these criteria. If a beneficiary meets all of the criteria in § 425.401(a), then the beneficiary will be eligible to be assigned to an ACO in accordance with the two-step beneficiary assignment methodology in § 425.402 and § 425.404. We also are finalizing the conforming change to § 425.400 to reflect the addition of this new provision and additional

conforming changes to § 425.400 to clarify that these revisions apply for purposes of benchmarking, preliminary prospective assignment (including quarterly updates which are in turn used to determine a sample of beneficiaries for purposes of assessing the ACO's quality performance), retrospective reconciliation, and prospective assignment.

3. Definition of Primary Care Services

a. Overview

As discussed in the proposed rule (79 FR 72792), we currently define ''primary care services'' for purposes of the Shared Savings Program in § 425.20 as the set of services identified by the following HCPCS/CPT codes: 99201 through 99215, 99304 through 99340, 99341 through 99350, the Welcome to Medicare visit (G0402), and the annual wellness visits (G0438 and G0439). In addition, as we will discuss later in this section, we have established a crosswalk for these codes to certain revenue center codes used by FQHCs (prior to January 1, 2011) and RHCs so that their services can be included in the beneficiary assignment process.

As we explained in the proposed rule (79 FR 72792), we established the current list of codes that constitute primary care services because of our belief that the listed codes represented a reasonable approximation of the kinds of services that are described by the statutory language at section 1899(c) of the Act, which refers to assignment of ''Medicare fee-for-service beneficiaries to an ACO based on their utilization of primary care services'' furnished by physicians. In addition, we selected this list to be largely consistent with the definition of ''primary care services'' in section 5501 of the Affordable Care Act, which establishes the Primary Care Incentive Payment Program (PCIP). The PCIP was established to expand access to primary care services, and thus its definition of ''primary care services'' provides a compelling precedent for adopting a similar list of codes for purposes of the beneficiary assignment process under the Shared Savings Program. We slightly expanded the list of codes found in section 5501 of the Affordable Care Act to include the Welcome to Medicare visit (HCPCS code G0402) and the annual wellness visits (HCPCS codes G0438 and G0439) as primary care services since these codes clearly represent primary care services frequently received by Medicare beneficiaries, and in the absence of the special G codes the services provided during these visits would be described by one or more of the regular office visit codes that are included in the list under section 5501 of the Affordable Care Act.

b. Proposed Revisions

As discussed in detail in the proposed rule (79 FR 72792 through 72794), we proposed to update the definition of primary care services at § 425.20 to include the transitional care management (TCM) codes (CPT codes 99495 and 99496) and the chronic care management (CCM) code HCPCS code GXXX1, which was replaced by CPT 99490 in the 2015 Medicare Physician Fee Schedule final rule. (See discussion at 79 FR 67716). We also proposed to include these codes in our beneficiary assignment methodology under § 425.402.

Specifically, effective January 1, 2013, Medicare pays for two CPT codes (99495 and 99496) that are used to report physician or qualifying non-physician practitioner TCM services for a patient following a patient's discharge to a community setting from an inpatient hospital or skilled nursing facility (SNF) or from outpatient observation status in a hospital or partial hospitalization. These codes were established to pay a patient's physician or practitioner to coordinate the patient's care in the 30 days following a hospital or SNF stay.

In addition, effective January 1, 2015, Medicare pays for CCM services (see 79 FR 67715 through 67728). CCM services generally include regular development and revision of a plan of care, communication with other treating health professionals, and medication management.

Further, in order to promote flexibility for the Shared Savings Program and to allow the definition of primary care services used in the Shared Savings Program to respond more quickly to HCPCS/CPT coding changes made in the annual PFS rulemaking process, we proposed to make any future revisions to the definition of primary care service codes through the annual PFS rulemaking process. Accordingly, we also proposed to amend the definition of primary care services at § 425.20 to include additional codes that we designated as primary care services for purposes of the Shared Savings Program, including new HCPCS/CPT codes or revenue codes and any subsequently modified or replacement codes. We sought comments on these proposals.

As discussed in detail in the proposed rule (79 FR 72792 through 72793), we also welcomed comment from stakeholders on the implications of retaining certain evaluation and management (E&M) codes used for physician services furnished in SNFs and other nursing facility settings (CPT codes 99304 through 99318) in the definition of primary care services. As we noted in the proposed rule, in some cases, hospitalists that perform E&M services in SNFs have requested that these codes be dropped from the definition of primary care services so that their ACO participant TIN need not be exclusive to only one ACO based on the exclusivity policy established in the November 2011 final rule (76 FR 67810 through 67811). The requirement under § 425.306(b) that an ACO participant TIN be exclusive to a single ACO applies when the ACO participant TIN submits claims for primary care services that are considered in the assignment process. However, ACO participant TINs upon which beneficiary assignment is not dependent (that is, ACO participant TINs that do not submit claims for primary care services that are considered in the assignment process) are not required to be exclusive to a single ACO. We indicated in the proposed rule that we continued to believe that it is reasonable to conclude that services provided in SNFs with CPT codes 99304 through 99318 represent basic E&M services that would ordinarily be provided in physician offices if the beneficiaries were not residing in nursing homes and should continue to be included in the definition of primary care services used for purposes of beneficiary assignment to an ACO participating in the Shared Savings Program.

Finally, we sought comments as to whether there are any additional existing HCPCS/CPT codes that we should consider adding to the definition of primary care services in future rulemaking for purposes of assignment of beneficiaries to ACOs under the Shared Savings Program.

Comment: Almost all commenters supported the proposal to include TCM and CCM in the definition of primary care, agreeing that the care coordination and care management services included under these codes are consistent with the delivery of primary care and will assist ACOs in lessening fragmentation and improving care coordination. A very small number of commenters opposed including these codes, suggesting that because they are new codes still untested in the market place, there could be unintended consequences, such as that there could be a propensity to double-pay for these services if attribution rules are not written properly since the possibility exists that beneficiaries may be seeing multiple providers in different locations. A commenter suggested there

should be a minimum of 1 year experience under the new codes available before they are used for assignment in the performance year. Another commenter believes that inclusion of CCM should be delayed until other concerns are addressed. For example, this commenter suggested that an ACO should be permitted to control utilization of CCM for its assigned beneficiaries, allowing an ACO to bill for CCM directly (assuming that all the requirements for billing the CCM code are met by the ACO) and superseding claims submitted by ACO providers/suppliers. A commenter pointed out that in the 2015 Medicare Physician Fee Schedule final rule, CMS opted to use CPT code 99490 for the CCM services instead of HCPCS code GXXX1.

Response: For the reasons discussed in the proposed rule, we agree with commenters who believe that the care coordination and care management services included under these codes are consistent with the delivery of primary care and will assist ACOs in lessening fragmentation and improving care coordination. We agree that we should use CPT code 99490 for the Chronic Care Management (CCM) services instead of HCPCS code GXXX1. (See the discussion at 79 FR 67716). We do not believe it is necessary to allow for a transition period for ACOs and their ACO participants to gain experience with these codes before incorporating them into the assignment process. We believe the coding definitions and other criteria that have been developed by CPT and CMS will facilitate use of these codes by ACO participants. Further, we do not believe it is appropriate for ACOs to use these or any other codes as a way to control utilization by the ACO participants.

Comment: A commenter recommended that emergency department visits count as primary care visits for purposes of assignment and that ACO participants should be encouraged to modify delivery of care in the ED to provide 24-hour access to care, but with a redesigned payment and delivery system that promotes primary care, meets the needs of rural communities and keeps costs down. Another commenter requested inclusion of inpatient E&M codes: Observation—99218–99220/Initial, 99224–99226/Subsequent; Hospital Inpatient—99221-99223/Initial, 99231–99233/Subsequent; and Hospital Inpatient Consultation—99251–99255.

Response: For the reasons we discussed in the initial Shared Savings Program final rule (76 FR 67853), we continue to believe that the services represented by these codes do not represent the kind of general evaluation and management of a patient that will constitute primary care. In addition, we will also note that these codes were not included in the definition of ''primary care services'' in section 5501 of the Affordable Care Act. That section establishes an incentive program to expand access to primary care services, and thus the definition of ''primary care services'' under that program provides a compelling reason for adopting a similar definition and list of codes for purposes of the Shared Savings Program.

Comment: A commenter requested clarification of how CMS would be modifying the ETA processes to reflect a change in coding policy under the Outpatient Hospital Prospective Payment System (OPPS) effective for services furnished on or after January 1, 2014.

Response: Effective January 1, 2014, CPT codes 99201 through 99205 and 99211 through 99215 are no longer recognized for payment under the OPPS. Under the OPPS, outpatient hospitals have been instructed to use HCPCS code G0493 and may no longer use 99201 through 99205 and 99211 through 99215. (For example, see our Web site at *http://www.cms.gov/Outreach-and-Education/Medicare-Learning-Network-MLN/MLNMattersArticles/downloads/MM8572.pdf*, page 3). This coding change under OPPS affects our ETA operational processes under the Shared Savings Program. This new information about how clinic visits are billed under OPPS came to light after the issuance of the December 2014 proposed rule. Therefore, we need to reconsider our ETA hospital-related proposal and intend to address the issue in future rulemaking. We discuss the primary care codes we use for ETA hospitals in section II.E.5. of this final rule.

Comment: Some commenters— in response to the discussion in the proposed rule regarding including the codes for SNF visits, CPT codes 99304 through 99318 in the definition of primary care services—objected to inclusion of SNF visit codes because they believe a SNF is more of an extension of the inpatient setting rather than a component of the community based primary care setting. These commenters believe that ACOs are often inappropriately assigned patients who've had long SNF stays but would not otherwise be aligned to the ACO and with whom the ACO has no clinical contact after their SNF stay. Some commenters draw a distinction between the services represented by these codes when provided in two different places of service, POS 31 (SNF) and POS 32 (NF). While the same CPT visit codes are used to describe these services in SNFs (POS 31) and NFs (POS 32), the patient population is arguably quite different. These commenters suggest excluding SNF visit codes furnished in POS 31 to relieve ACO participants that bill for the services of hospitalists from the requirement that they must be exclusive to a single ACO if their services are considered in assignment. Patients in SNFs (POS 31) are shorter stay patients who are receiving continued acute medical care and rehabilitative services. While their care may be coordinated during their time in the SNF, they are then transitioned back to the community. Patients in a SNF (POS 31) require more frequent practitioner visits—often from 1 to 3 times a week. In contrast, patients in NFs (POS 32) are almost always permanent residents and generally receive their primary care services in the facility for the duration of their life. Patients in NFs (POS 32) are usually seen every 30 to 60 days unless medical necessity dictates otherwise. Another commenter suggested that we should consider establishing separate CPT codes to distinguish between E&M services provided by SNFs vs other nursing facilities.

Response: We appreciate receiving these suggestions on how we could create a method to exclude services billed for beneficiaries receiving Part A SNF care from the definition of ''primary care services'' by using POS 31 to identify such claims. We plan to consider this issue further and will discuss it in future rulemaking.

Comment: A commenter requested that we establish a separate definition for ''beneficiary assignment services'' that will reflect the primary care services used to assign beneficiaries to ACOs under § 425.20. In this way, CMS could satisfy the need to narrowly define ACO assignment while continuing to broaden the definition of ''primary care'' in a manner consistent with a wide range of CMS' health reform efforts.

Response: We do not believe that this revision is necessary. The definition of primary care services under § 425.20 applies only to the Shared Savings Program and does not directly affect other CMS programs.

Comment: A few commenters supported CMS's proposal to make any future revisions to the definition of primary care service codes through the annual PFS rulemaking process.

Response: We believe such a process will provide CMS with flexibility to address any future appropriate revisions to the definition of primary care service

codes promptly. ACOs and other interested stakeholders will continue to have an opportunity as part of the annual PFS rulemaking to provide input before any revisions to the definition of primary care services are implemented.

FINAL ACTION: We are finalizing our proposal to update the definition of primary care services at § 425.20 to include both TCM codes (CPT codes 99495 and 99496), the CCM code (CPT code 99490), and to include these codes in our beneficiary assignment methodology under § 425.402. Further, we are finalizing our proposal to amend § 425.20 to make any future revisions to the definition of primary care service codes through the annual PFS rulemaking process.

4. Consideration of Physician Specialties and Non-Physician Practitioners in the Assignment Process

a. Overview

Primary care services can generally be defined based on the type of service provided, the type of provider specialty that provides the service, or both. As discussed in detail in the proposed rule (79 FR 72794) our current assignment process simultaneously maintains the requirement to focus on primary care services in beneficiary assignment, while recognizing the necessary and appropriate role of specialists in providing primary care services, such as in areas with primary care physician shortages.

Under § 425.402, after identifying all patients who had a primary care service with a physician who is an ACO professional (and who are thus eligible for assignment to the ACO under the statutory requirement to base assignment on ''utilization of primary care services'' furnished by physicians), we employ a step-wise assignment process that occurs in the following two steps:

Step 1: In this step, first we add up the allowed charges for primary care services billed by primary care physicians through the TINs of ACO participants in the ACO. Next, we add up the allowed charges for primary care services furnished by primary care physicians that are billed through other Medicare-enrolled TINs (or through a collection of ACO participant TINs in the case of another ACO). If the allowed charges for the services furnished by ACO participants are greater than the allowed charges for services furnished by the participants in any other ACO or by any non-ACO participating Medicare-enrolled TIN, then the beneficiary is assigned to the ACO in the first step of the assignment process.

Step 2: This step applies only for beneficiaries who have not received any primary care services from a primary care physician. We assign a beneficiary to an ACO in this step if the beneficiary received at least one primary care service from a physician participating in the ACO, and more primary care services (measured by Medicare allowed charges) from ACO professionals (physician regardless of specialty, NP, PA or clinical nurse specialist (CNS)) at the ACO than from ACO professionals in any other ACO or solo practice/group of practitioners identified by a Medicare-enrolled TIN or other unique identifier, as appropriate, that is unaffiliated with any ACO.

Since publication of the November 2011 final rule (76 FR 67853 through 67858), we have gained further experience with this assignment methodology. We have learned from its application for the first 400 ACOs participating in the program that, for the total 7.1 million assigned beneficiaries, about 92 percent of the beneficiaries assigned to ACOs are assigned in step 1, with only about 8 percent of the beneficiaries being assigned in step 2. We have adopted a similar beneficiary assignment approach for some other programs, such as the PQRS Group Practice Reporting Option via the GPRO web interface (77 FR 69195 through 69196) and the Value Modifier (VM) (79 FR 67790 and 79 FR 67962).

We continue to believe that the current step-wise assignment methodology generally provides a balance between maintaining a strong emphasis on primary care while ultimately allowing for assignment of beneficiaries on the basis of how they actually receive their primary care services. However, we proposed several revisions that we believe would improve the assignment methodology.

b. Proposed Revisions

(1) Including Primary Care Services Furnished by Non-Physician Practitioners in Step 1

First, we proposed to include primary care services furnished by non-physician practitioners (NPs, PAs, and CNSs) in step 1 of the assignment methodology rather than only in step 2 as they are under the current process. We discussed the reasons for this proposal in detail in the proposed rule (79 FR 72795). In summary, including services furnished by NPs, PAs, and CNSs in determining the plurality of primary care services in step 1 of the assignment process may help ensure that beneficiaries are assigned to the ACO (or non-ACO entity) that is actually providing the plurality of primary care for that beneficiary and thus, should be responsible for managing the patient's overall care. We also noted that section 5501 of the Affordable Care Act defines a ''primary care practitioner'' as a physician who has a primary specialty designation of family medicine, internal medicine, geriatric medicine, or pediatric medicine or as a ''nurse practitioner, clinical nurse specialist, or physician assistant.'' Therefore, we believe that it would be appropriate to include these non-physician practitioners in step 1 of the assignment process in order to better align the Shared Savings Program assignment methodology with the primary care emphasis in other provisions of the Affordable Care Act. Further, we believe that including these non-physician practitioners in step 1 would be supported by the statute as long as we continue to first identify all patients that have received a primary care service from a physician who is an ACO professional and who are thus eligible for assignment to the ACO under the statutory requirement to base assignment on ''utilization of primary care services'' furnished by physicians. Accordingly, we proposed to amend the assignment methodology to include primary care services furnished by NPs, PAs, and CNSs in step 1 of the assignment process. Specifically, we proposed to revise § 425.402(a) to include NPs, PAs, and CNSs as ACO professionals that would be considered in step 1 of the assignment process. We sought comments on our proposal.

However, we also noted that there could be some concerns about adding NPs, PAs, and CNSs to step 1 of the assignment methodology. Unlike for physicians, the CMS self-reported specialty codes reported on claims for NPs, PAs, and CNSs are not further broken down by specific specialty areas. Therefore, the codes do not allow practitioners to indicate whether they are typically functioning as primary care providers or as specialists. We expressed concern that by considering services furnished by NPs, PAs, and CNSs in step 1, we may ultimately assign some beneficiaries to an ACO inappropriately based on specialty care over true primary care. Thus, while we invited comments on our proposal to include primary care services furnished by NPs, PAs, and CNSs in step 1 of the assignment methodology, we also requested comment on the extent to which these non-physician practitioners provide non-primary care services and whether there are ways to distinguish between primary care services and non-

primary care services billed by these non-physician practitioners.

Comment: Most commenters supported this proposal, at least in concept, agreeing that many NPs, PAs, and CNSs are engaged in the delivery of primary care and their inclusion within Step 1 can provide for a more accurate primary care-based assignment. However, many of these commenters also pointed out that some NPs, PAs, and CNSs furnish specialty care and not primary care. Therefore, these commenters suggested that CMS should take additional steps to assure that the NPs, PAs, and CNSs considered under Step 1 are truly primary care providers in order to better assure accurate assignment of beneficiaries to ACOs. These commenters provided a wide range of suggestions. These suggestions included developing new, more detailed specialty codes for NPs, PAs, and CNSs: Implementing a primary care attestation process for non-physician practitioners that would be somewhat similar to the attestation process that is currently used for physicians that furnish primary care services in FQHCs/RHCs; implementing such a primary care attestation process for all ACO professionals including both physicians and non-physician practitioners; revising the CMS PECOS enrollment system to require non-physician practitioners to indicate whether they provide primary care; analyzing claims data to determine whether a relationship exists between a non-physician practitioner and a primary care physician; using service code modifiers to clearly identify the clinician performing a specific service; and giving each ACO the option to include or not include non-physician practitioners for their beneficiary assignments, among other suggestions.

Some commenters supporting the proposal acknowledged that NPs are not classified in specialty codes by CMS, but believe this is unlikely to be a serious problem. For example, a commenter indicated that recent surveys found that, of the 205,000 NPs in the U.S., more than 87 percent are prepared in primary care and more than 75 percent practice in at least one primary care site. Another commenter stated that NPs are prepared and certified in the primary care specialties with basically the same frameworks as physicians: Family, adult (internal medicine) and gerontology, and that women's health NPs are focused on primary care. Another commenter noted that there exists the same inability to discern whether physicians are actually providing primary care services versus non-primary care services. These commenters requested that CMS not create barriers for one group of ACO professionals with requirements that are not placed on others.

A few commenters opposed including non-physician practitioners in step 1 because Medicare claims data is not able to distinguish between their primary care and specialty care. A commenter opposed assigning a beneficiary to an ACO based solely on services delivered by a non-physician ACO professional.

Response: We agree with commenters who believe including NPs, PAs, and CNSs in step 1 of the assignment methodology will further strengthen our current assignment process. Including services furnished by NPs, PAs, and CNSs in determining the plurality of primary care services in step 1 of the assignment process may help ensure that beneficiaries are assigned to the ACO (or non-ACO entity) that is actually providing the plurality of primary care for that beneficiary and thus, should be responsible for managing the patient's overall care. In this way, all primary care services furnished by the entire primary care physician and practitioner team (including NPs, PAs, and CNSs working in clinical teams in collaboration with or under the supervision of physicians), will be considered for purposes of determining where a beneficiary received the plurality of primary care services under step 1 of the assignment methodology.

At this time, we will not establish special procedures to determine whether NPs, PAs, and CNSs are actually performing primary care and not specialty care. We agree with commenters who indicated that most non-physician practitioners have been prepared in primary care or provide services in primary care settings or both, and that we should not unnecessarily create barriers for one group of ACO professionals with requirements that are not placed on others. Furthermore, we note that any non-physician practitioner services furnished and billed as ''incident to'' the services of a specialist physician will be billed under the specialist physician's NPI. Therefore, such ''incident to'' non-physician services will be excluded from Step 1 of the assignment process. However, we will continue to monitor this issue.

Also we further clarify that beneficiaries will not be assigned to ACOs solely based on services provided by non-physician practitioners. We will continue under § 425.402 to first identify all patients who have received a primary care service from a physician who is an ACO professional and who are thus eligible for assignment to the ACO under the statutory requirement to base assignment on ''utilization of primary care services'' furnished by physicians.

Comment: A commenter believes that CMS should allow primary care physicians to identify collaborating allied professionals, such as NPs, to act ''on their behalf,'' so those visits would not count against them in the attribution process. The commenter stated that this should be allowed even if the collaborating allied professional is under an entity with a different Medicare-enrolled TIN.

Response: We disagree. Primary care services furnished by physicians and non-physicians are all included in the assignment algorithm if they are billed under the TIN of an ACO participant. We do not believe it would be appropriate under the beneficiary assignment process to include such primary care services billed under a TIN that has not agreed to participate in the ACO.

Comment: A commenter encouraged CMS to assign Medicare beneficiaries directly to ACOs on the basis of primary care services provided by NPs and PAs, only when such services are provided in a manner consistent with state law requirements, including requirements related to physician supervision.

Response: We do not believe it is necessary to establish such additional criteria for the Shared Savings Program. Primary care services provided by NPs and PAs are only payable under the PFS when such services are provided in a manner consistent with state law requirements, including requirements related to physician supervision.

FINAL ACTION: We are finalizing our proposal to amend § 425.402(a) to include claims for primary care services furnished by NPs, PAs, and CNSs under step 1 of the assignment process, after having identified beneficiaries who received at least one primary care service by a physician participating in the ACO. The current methodology will continue to be used for PY 2015, including reconciliation, while the new methodology will be used for operations related to PY 2016. Thus, we are retaining the rules for the current methodology under § 425.402(a) and the methodology that will be applicable for performance years beginning in 2016 has been designated under § 425.402(b).

(2) Excluding Services Provided by Certain Physician Specialties From Step 2

Second, we proposed to exclude services provided by certain physician specialties from step 2 of the assignment process. We made this proposal partly to address stakeholder concerns that by

including such claims in step 2 of the assignment process, the ACO participant TINs that submit claims for services furnished by certain specialists are limited to participating in only one ACO because of the exclusivity requirement under § 425.306(b) of the regulations. This requirement is discussed in the November 2011 final rule (76 FR 67810 through 67811). Specifically, some stakeholders have stated that certain specialties that bill for some of the E&M services designated as primary care services under § 425.20 do not actually perform primary care services. We agree that although some specialties such as surgeons and certain others bill Medicare for some of the Shared Savings Program ''primary care'' codes, in actual practice the services such specialists perform when reporting these codes do not typically represent primary care services because the definitions of HCPCS/CPT codes for office visits and most other E&M services are not based on whether primary care is provided as part of the service. Accordingly, we agree that to identify primary care service claims more accurately, the CPT codes for primary care services should be paired with the specialties of the practitioners who render those services and that it would be appropriate to exclude claims for services provided by certain physician specialties from the beneficiary assignment process.

Therefore, we proposed to exclude services provided by certain CMS physician specialties from the beneficiary assignment process. The net effect of this proposal would be to exclude certain claims from determining the ACO's assigned population. The proposed lists of physician specialties that would be included in and excluded from the assignment process (provided in Tables 1 through 4 of the proposed rule and also included in Tables 2 through 5 in this final rule) were based on recommendations by CMS medical officers knowledgeable about the services typically performed by physicians and non-physician practitioners. However, we note that given the many requests and comments from specialists and specialty societies asking to have their services included in the assignment methodology that we received during the original rulemaking to establish the Shared Savings Program, in the proposed rule we attempted to limit the list of physician specialty types that would be excluded from the assignment process to those physician specialties that would very rarely, if ever, provide primary care to beneficiaries. As a general rule, for example, we expected that physicians with an internal medicine subspecialty such as nephrology, oncology, rheumatology, endocrinology, pulmonology, and cardiology would frequently provide primary care to their patients. Especially for beneficiaries with certain chronic conditions (for example, certain heart conditions, cancer or diabetes) but who are otherwise healthy, we expect that these specialist physicians often take the role of primary care physicians in the overall treatment of the beneficiaries if there is no family practitioner or other primary care physician serving in that role. In contrast, we expect that most surgeons, radiologists, and some other types of specialists would not typically provide a significant amount of primary care, if any, and therefore we proposed to exclude their services from the assignment process.

We proposed to amend § 425.402 by adding a new paragraph (b) to identify the physician specialty designations that would be considered in step 2 of the assignment process. We also proposed to modify the exclusivity requirement at § 425.306(b) to clarify how the exclusivity rules would be affected by this proposal to exclude certain specialists from step 2 of the assignment methodology. Specifically, we proposed to revise § 425.306(b) to indicate that each ACO participant who submits claims for primary care services used to determine the ACO's assigned population must be exclusive to one Shared Savings Program ACO.

In addition, we proposed to make several conforming and technical changes to § 425.402(a). First, we proposed a modification to provide that for purposes of determining whether a beneficiary has received a primary care service from a physician who is an ACO professional, we would consider only services furnished by primary care physicians or physicians with a specialty listed in new paragraph (b). Secondly, we proposed to make modifications to conform with changes in the definitions of ''assignment,'' ''ACO professional,'' and ''ACO provider/supplier'' in addition to our proposal to adopt a prospective assignment approach under proposed Track 3, which is discussed in section II.F. of this final rule. We sought comment on these proposals. We received a high volume of comments on this proposal.

Comment: Commenters agreed with the proposal to remove from the assignment process those claims submitted by physician specialties (for example, surgeons) that, despite using the general purpose CPT and HCPCS codes defined as ''primary care'' under current regulations, do not actually perform primary care services. Some commenters suggested specialty specific revisions to CMS' proposal. However, in a few cases commenters were not in agreement about whether specific specialties should be included in step 2 or not. For example, a few commenters supported including physical medicine and rehabilitation, rheumatology, and OB/GYN whereas a few other commenters requested they be removed. A number of commenters suggested we modify our proposals based on input from each individual specialty organization. Other commenters requested revisions to CMS' proposals regarding specialties to be included in step 2 of the beneficiary assignment process are as follows:

A commenter urged CMS to include pediatric medicine (specialty code 37) as an explicit part of the beneficiary assignment step 1 rather than step 2. The commenter noted that many elements of the framework that CMS constructs for Medicare ACOs will guide future proposals for Medicaid ACOs, as well as the design of similar plans by commercial payers or large self-insured groups.

Commenters requested that psychiatrists (specialty codes 26, 27, 79, and 86) be included in step 2 assignment. These commenters indicated psychiatry is frequently the point of first contact for persons with undiagnosed conditions and that there are a number of important reasons why most persons with serious mental illness would rather receive their care from their psychiatrist rather than primary care physicians.

Other commenters requested that CMS include specialty code 12 (osteopathic manipulative medicine) in step 2 because osteopaths frequently provide primary care services. These commenters also requested that CMS update this specialty code name in Table 4 of this final rule.

A commenter urged CMS to exclude hospice and palliative medicine (specialty code 17) from step 2 of the beneficiary assignment process in the final rule. The commenter that while many hospice and palliative care physicians have formal relationships with multiple health systems in order to meet a current and growing demand for palliative care and hospice services, the exclusivity requirement makes it difficult for these physicians to easily participate in multiple ACOs.

A commenter representing specialty code 03 requested exclusion of specialty code 03 from step 2, indicating that allergy and immunology physicians are

not primary care physicians for the vast majority of patients they serve.

A commenter requested that infectious disease physicians (specialty code 44) be excluded from step 2 of the beneficiary assignment process in the final rule. The commenter stated these specialists would not typically provide primary care and that these specialists should be free to participate in multiple ACOs as, often times, they visit multiple hospitals and their clinical practice can span wide geographies. Other commenters requested that gastroenterology (specialty code 10), rheumatology (specialty code 66) and interventional cardiology (C3) be excluded from step 2, indicating that these specialists typically provide specialty care and would not routinely provide primary care.

Response: Our intent under the proposal was to exclude primary care service codes submitted by physician specialties that will very rarely, if ever, provide true primary care to beneficiaries. We continue to believe that the exclusion of such claims from determining the ACO's assigned population will result in more accurately assigning beneficiaries to ACOs based on where beneficiaries receive a plurality of true primary care services. However, after reviewing comments, we have determined that we need to modify our proposed policy. Specifically, we agree with the commenters who suggested that we consider the recommendations submitted by individual specialty organizations to revise the specialties to be included in step 2, because in general specialty organizations are knowledgeable about the types of services that the specialists provide, as well as the typical types of organizational relationships that such specialists have established. Therefore, if we received support for a specialty specific proposal listed in Table 2 or 3 of the proposed rule (79 FR 72796 and 72797), or at least received no objection from an affected specialty organization, then we are finalizing our specialty proposal. If a specialty society requested a revision to our proposals listed in Tables 1 through 4 of the proposed rule (79 FR 72796 and 72797), then we have generally accepted their recommendation when feasible. Responses to the specialty specific comments requesting revisions to our proposals are as follows:

- We agree with comments that recommended that it would be appropriate to include pediatric medicine in step 1 assignment. We agree that pediatricians typically provide primary care for their patients. While very few children are Medicare beneficiaries, we also believe it will be appropriate to include these physicians in step 1 of the assignment process in order to better align the Shared Savings Program assignment methodology with the primary care emphasis in other provisions of the Affordable Care Act; section 5501 of the Affordable Care Act includes pediatric medicine in the definition of ''primary care practitioner.''
- Because we agree that osteopaths frequently provide primary care services, we agreed with commenters that specialty code 12 (osteopathic manipulative medicine) should be included in Step 2 assignment. As requested, we have also corrected the specialty name in this final rule for specialty code 12.
- We agree with commenters that psychiatry and its subspecialties (CMS specialty codes 26, 27, 79, and 86) often provide a substantial proportion of primary care for certain patients and therefore should be included in Step 2 assignment. We agree that psychiatry is frequently the point of first contact for persons with undiagnosed conditions and that those persons with serious mental illness or substance abuse disorders or both may prefer to receive their total care from their psychiatrist rather than from primary care physicians.
- We agree with commenters who requested that the following specialties be added to the list of specialties to be excluded from step 2 assignment: allergy and immunology (specialty code 03); gastroenterology (specialty code 10); infectious diseases (specialty code 44); rheumatology (specialty code 66); and interventional cardiology (C3). We agree that these specialists typically provide specialty care and do not routinely provide primary care for the vast majority of patients they serve. Despite their use of the same office visit codes that are included in the definition of primary care services under § 425.20, we agree with the commenters that these specialties do not routinely furnish primary care and furthermore, are not seen by patients as serving in a primary care role.
- We agree with commenters who requested that hospice and palliative medicine physicians (specialty code 17) should also be excluded from step 2 assignment. We note that certain physician services furnished to beneficiaries receiving services under the hospice benefit are paid through the Part A Hospice benefit and are not paid under the PFS. (See, for example, Medicare Claims Processing Manual, Chapter 11—Processing Hospice Claims). This could make it difficult to determine for such beneficiaries, based on analysis of PFS claims, whether an ACO is actually providing the plurality of primary care service and managing the patient's overall care. At this time, we agree with commenters that hospice and palliative medicine physicians (specialty code 17) should be excluded from step 2. We emphasize that we are not excluding beneficiaries in Hospice from assignment to ACOs. However, we will not use services furnished by specialty code 17 to help determine beneficiary assignment. We believe this approach will still provide an incentive for ACOs to work with physicians furnishing palliative care and hospice care. We will consider these issues further and we may request additional comments in a future rulemaking on ways to assign beneficiaries receiving services under the Hospice benefit to the ACO or other entity that is actually providing primary care and managing the patient's overall care.

Therefore, we are finalizing our proposal to exclude services provided by certain physician specialties with the exception of these modifications. We believe the resulting step 2 exclusion list is limited to those physician specialties that will rarely, if ever, provide primary care to beneficiaries. We do not expect that the exclusion of these specialties from step 2 will have a significant impact on the overall number of beneficiaries assigned to each ACO because we believe the specialties that we are excluding from the assignment methodology provide a relatively modest number of services under the codes included in the definition of primary care services or are not typically the only physician who a beneficiary sees. For example, patients who are furnished consultations by a thoracic surgeon will typically also concurrently receive care from a primary care physician, cardiologist or other medical specialist.

The primary benefit of this final policy is that it will help correctly assign beneficiaries to the ACO or other entity that is actually providing primary care and managing the patient's overall care. Otherwise, for example, a beneficiary could inadvertently be assigned to an ACO based on services furnished by a surgeon who had not provided primary care but had provided a number of consultations for a specific clinical condition. Another important benefit of this policy is that any ACO participants who submit claims solely for services performed by the categories of specialists that we are excluding from the assignment process will have greater flexibility to participate in more than

one ACO. This could especially be the case for small physician practices that only submit claims for specialty services. Allowing such ACO participants who are composed solely of excluded specialists to participate in more than one ACO will support our goal of facilitating competition among ACOs by increasing the number of specialists who can participate in more than one ACO. ACO participant TINs that submit claims for primary care services that are used in our assignment methodology must continue to be exclusive to one Shared Savings Program ACO for purposes of beneficiary assignment.

Comment: A few commenters believe that CMS has applied assignment exclusivity more broadly than we had indicated in the 2011 final rule, and that we have effectively precluded any practice, regardless of specialty, that bills for E&M services from full-fledged participation in more than one ACO. Another commenter requested that previously issued guidance on how Medicare enrolled TINs could join with multiple ACOs as ''other entities'', instead of as exclusive ACO participants, be formalized to ease ACOs' reservations about entering into shared savings contracts with ''other entities.'' Specifically, the commenter urged CMS to formalize the principle that such other entities that are not ACO participants or ACO providers/suppliers may share in an ACO's savings if the arrangement advances the ACO's goals of increased care coordination, improved quality, and more efficient care delivery. A commenter requested that CMS provide clarity on how specialists that are excluded from the ACO beneficiary assignment process can participate in multiple ACOs and how we will ensure that administrative errors are avoided. The commenter is concerned that solo practitioners and single specialty practices will encounter problems if it is discovered that their TINs are associated with multiple ACOs.

Response: We have been consistent in our application of the requirement that ACO participants that submit claims for primary care services that are considered in the assignment methodology must be exclusive to a single ACO. We are finalizing our proposed changes to § 425.306(b) to clarify that each ACO participant who submits claims for primary care services used to determine the ACO's assigned population must be exclusive to one Shared Savings Program ACO. Specifically, under § 425.306(b), the requirement that an ACO participant must be exclusive to a single ACO applies whenever the ACO's beneficiary assignment is dependent on that TIN, or in other words, when the primary care service claims submitted by the ACO participant are used to determine the ACO's assigned population. The application of the exclusivity requirement to an ACO participant is not affected by whether or not a FFS beneficiary for whom an ACO participant has submitted claims for primary care services is ultimately assigned to the ACO. Retrospective reconciliation occurs at the end of the performance year, so an ACO participant will not know with certainty whether it has to be exclusive to a single ACO during a particular performance year if the requirement were dependent on which beneficiaries ultimately got assigned to the ACO. Rather, an ACO participant that submits claims to Medicare for primary care services must be exclusive to a single ACO because the claims for primary care services submitted by the ACO participant are used to determine beneficiary assignment to the ACO. Additionally, the exclusivity requirement is not affected by whether or not the primary care services for which the ACO participant submits claims are services furnished by primary care physicians, specialist physicians, or NPs, PAs, and CNSs. Furthermore, this exclusivity requirement applies only to the ACO participant TIN and not to individual practitioners, and only for purposes of assignment. For example, if a two person group submitted claims for services furnished by a physician specialist excluded from assignment and also submitted claims for primary care services furnished by a PA, then this group will still need to be exclusive to one ACO since the group's claims are being used for assignment. Individual practitioners are free to participate in multiple ACOs, provided they are billing under a different Medicare-enrolled TIN for each ACO in which they participate. (See 76 FR 67810 through 67811). For example, there may be practitioners who work in multiple settings and bill Medicare for primary care services through several different TINs, depending on the setting. If each of these TINs represents an ACO participant in a different ACO, then the practitioner will be an ACO professional in more than one ACO.

Previously, we also issued guidance on how Medicare-enrolled TINs could join with multiple ACOs as ''other entities'' (see FAQ numbers 8 through 13 at *http://www.cms.gov/Medicare/Medicare-Fee-for-Service-Payment/sharedsavingsprogram/FAQ.html#ACO_Participant_TIN_Exclusivity_and_Other_Entities*). ''Other entities'' do not appear on the certified list of ACO participants and they are not used for program operations such as assignment. Therefore, they are not required to be exclusive to a single Shared Savings Program ACO. Entities that are not ACO participants or ACO providers/suppliers may share in an ACO's savings if the arrangement advances the ACO's goals of increased care coordination, improved quality, and more efficient care delivery. ACOs and ACO participants negotiate these arrangements individually. Although we are not providing additional guidance in this final rule regarding such other entities, we will continue to review this issue and intend to develop additional educational material to address specific questions raised as needed.

Comment: A commenter stated that assignment of beneficiaries to an ACO violates the beneficiary's freedom of choice of provider. A few other commenters recommended that CMS clearly explain to beneficiaries that alignment (that is, assignment) to an ACO does not alter a beneficiary's Medicare rights or consumer protections, including the freedom to choose a Medicare-enrolled provider that is outside the ACO.

Response: As noted previously, the statute requires the Secretary to determine an appropriate method to assign beneficiaries to ACOs on the basis of primary care services furnished to them by physicians. The term ''assignment'' for purposes of the Shared Savings Program in no way implies any limits, restrictions, or diminishment of the rights of Medicare FFS beneficiaries to exercise freedom of choice in the physicians and other health care providers and suppliers from whom they receive their services. Likewise, the requirement that ACO participants that furnish primary care services used for assignment must be exclusive to a single ACO does not in any way imply that beneficiaries are locked into receiving services or referrals from specific ACO providers/suppliers. This point is also emphasized in educational materials for ACOs and beneficiaries.

Comment: A number of commenters suggested a very wide variety of alternative beneficiary assignment approaches for CMS to consider that would allow for ACO and provider choice. Some commenters suggested that CMS create a process by which each individual ACO could specifically identify the specialty/subspecialty physicians to include in its beneficiary assignment. A commenter suggested a different approach to determining the

inclusion and exclusion of certain providers in which we would delineate new criteria that more accurately pinpoint high cost, high risk, high need patients for whom continuity with certain providers is important. In the spirit of beneficiary empowerment and to support the concept of continuity of care, a commenter suggested that CMS should consider implementing a way for beneficiaries to affirm up front, that is to attest, the individual they believe to be ''their doctor.'' This would not limit patients from exercising provider choice going forward, but would allow patients to influence at least some part of patient attribution to the extent they have a relationship that is important to them.

A few other commenters suggested that assignment should be based on an alternative precedence or a weighting of the specific services included within the definition of primary care services. For example, a commenter suggested the first tier assignment should be with the use of the welcome to Medicare visit (G0402), the initial wellness exam (G0438), subsequent wellness exam (G0439), the CCM codes (99490) and TCM codes (99495 and 99496). Another the commenter suggested that assignment should be based on the number of ''touches'' the ACO has with the beneficiary which would outweigh the cumulative cost of services (that is, allowed charges) as the methodology for determining the plurality of primary care services for assignment purposes. The commenter indicated commercial payers have developed an ACO attribution methodology with which CMS should consider aligning, where the preponderance of care services (not necessarily cumulative cost) is used to assign patients.

Response: We appreciate these suggestions. However, in some cases, we do not believe that these suggestions are operationally feasible as it is not possible to implement the new processes that would be necessary to allow for individual ACO or provider choice or both at this time. We believe it would be burdensome on both ACOs and CMS to collect and maintain this information. Also, we have gained experience with our current method in the Physician Group Practice Demonstration, where it was well accepted (see *http://www.cms.gov/Medicare/Demonstration-Projects/DemoProjectsEvalRpts/Medicare-Demonstrations-Items/CMS1198992.html*). Furthermore, we have adopted a similar beneficiary assignment approach for some other major programs, including the PQRS Group Practice Reporting Option via the GPRO web interface (77 FR 69195 through 69196) and the Value Modifier (VM) (79 FR 67790 and 79 FR 67962). In addition, the effect of these alternative approaches on ACOs, ACO participants, and ACO providers/suppliers is uncertain. However, we note that we plan for future rulemaking to allow for a method to incorporate beneficiary attestation into the assignment methodology as described in section II.F.7.b.(1). of this final rule.

We believe the revisions to the assignment methodology that we are finalizing in this rule will result in more accurate assignment of beneficiaries to ACOs based on where beneficiaries receive the plurality of true primary care services, while continuing to recognize that in some cases specialist physicians often take the role of primary care physicians in the overall treatment of the beneficiaries if there is no primary care physician or non-physician practitioner serving in that role.

FINAL ACTION: We are modifying our proposal to exclude services provided by certain physician specialties based on public comment, as follows:

- To include pediatric medicine (specialty code 37) in step 1 assignment.
- To include osteopathic manipulative medicine (specialty code 12) and psychiatry specialties (specialty codes 26, 27, 79, 86) in step 2 assignment.
- To exclude allergy and immunology (specialty code 03), gastroenterology (specialty code 10), hospice and palliative medicine (specialty code 17), infectious diseases (specialty code 44), rheumatology (specialty code 66), and interventional cardiology (C3) from step 2 assignment.

More specifically, the following four tables display the specific CMS physician specialty codes that are now included and excluded for beneficiary assignment purposes under the Shared Savings Program.

- Table 2 of this final rule shows the CMS physician specialty codes that are included in step 1 under the final policy.
- Table 3 of this final rule shows the CMS specialty codes for NPs, PAs, and CNSs that are included in beneficiary assignment step 1 under the final policy.
- Table 4 of this final rule lists the physician specialties that are included in step 2 under the final policy.
- Table 5 of this final rule lists the physician specialties that are excluded from the beneficiary assignment methodology under step 2 under the final policy. Services furnished by these physician specialties are also excluded for purposes of determining if a beneficiary has received a primary care service from a physician who is an ACO professional, which under § 425.402(a) is a precondition for assignment to an ACO.

TABLE 2—SPECIALTY CODES INCLUDED IN ASSIGNMENT STEP 1

Code	Specialty name
01	General Practice.
08	Family Practice.
11	Internal Medicine.
37	Pediatric Medicine.
38	Geriatric Medicine.

TABLE 3—CMS NON-PHYSICIAN SPECIALTY CODES INCLUDED IN ASSIGNMENT STEP 1

Code	Specialty name
50	Nurse practitioner.
89	Clinical nurse specialist.
97	Physician assistant.

TABLE 4—PHYSICIAN SPECIALTY CODES–INCLUDED IN ASSIGNMENT STEP 2

Code	Specialty name
06	Cardiology.
12	Osteopathic manipulative medicine.
13	Neurology.
16	Obstetrics/gynecology.
23	Sports medicine.
25	Physical medicine and rehabilitation.
26	Psychiatry.
27	Geriatric psychiatry.
29	Pulmonary disease.
39	Nephrology.
46	Endocrinology.
70	Multispecialty clinic or group practice.
79	Addiction medicine.
82	Hematology.
83	Hematology/oncology.
84	Preventive medicine.
86	Neuro-psychiatry.
90	Medical oncology.
98	Gynecology/oncology.

TABLE 5—PHYSICIAN SPECIALTY CODES EXCLUDED FROM ASSIGNMENT STEP 2

Code	Specialty name
02	General surgery.
03	Allergy/immunology.
04	Otolaryngology.
05	Anesthesiology.
07	Dermatology.
09	Interventional pain management.
10	Gastroenterology.
14	Neurosurgery.

TABLE 5—PHYSICIAN SPECIALTY CODES EXCLUDED FROM ASSIGNMENT STEP 2—Continued

Code	Specialty name
17	Hospice and Palliative Care.
18	Ophthalmology.
20	Orthopedic surgery.
21	Cardiac electrophysiology.
22	Pathology.
24	Plastic and reconstructive surgery.
28	Colorectal surgery.
30	Diagnostic radiology.
33	Thoracic surgery.
34	Urology.
36	Nuclear medicine.
40	Hand surgery.
44	Infectious disease.
66	Rheumatology.
72	Pain management.
76	Peripheral vascular disease.
77	Vascular surgery.
78	Cardiac surgery.
81	Critical care (intensivists).
85	Maxillofacial surgery.
91	Surgical oncology.
92	Radiation oncology.
93	Emergency medicine.
94	Interventional radiology.
99	Unknown physician specialty.
C0	Sleep medicine.
C3	Interventional Cardiology.

We are finalizing our proposal to amend § 425.402 by adding a new paragraph (c) to identify the physician specialty designations that will be considered in step 2 of the assignment process, with the modifications noted previously. We are also finalizing the proposed modification to the exclusivity requirement at § 425.306(b) to clarify how the exclusivity rules will be affected by our final policy of excluding certain specialists from step 2 of the assignment methodology. Specifically, we are revising § 425.306(b) to clarify that each ACO participant who submits claims for primary care services used to determine the ACO's assigned population must be exclusive to one Shared Savings Program ACO.

The current assignment methodology will continue to be used for PY 2015, including the final retrospective reconciliation which will occur in mid-2016, while the new methodology will be used for operations related to PY 2016, including during application review for ACOs that are applying or renewing for a 2016 start date. Thus, we have retained the rules for the current methodology under § 425.402(a) and the methodology that will be applicable for performance years beginning in 2016 has been designated under § 425.402(b) and (c). We did not receive any comments that directly addressed our proposal to make several conforming and technical changes to § 425.402(a), and we are finalizing them with modifications to accommodate the revisions necessary to retain the current assignment methodology for PY 2015. Therefore, we clarify that the conforming and technical changes are reflected in §§ 425.402(a) and (b).

(3) Other Assignment Methodology Considerations

Finally, we note that in the proposed rule we considered another alternative approach to assignment. We considered whether it might be preferable, after excluding the specialties listed in Table 3 of the proposed rule from step 2 of the assignment process, to further simplify beneficiary assignment by establishing an assignment process that involves only a single step in which the plurality of primary care services provided by the physicians listed in Tables 1 and 2 of the proposed rule, and the non-physician practitioners in Table 4 of the proposed rule, would all be considered in a single step. (See 79 FR 72798). However, while it had some attractive features, we also expressed some important concerns about this approach. For example, beneficiaries receiving concurrent care from both primary care physicians and specialists could inappropriately be assigned to an ACO or other entity that is not responsible for managing their overall care. Therefore, we expressed a concern that by establishing an assignment methodology based on a single step, we might reduce our focus on primary care and ultimately assign some beneficiaries to an ACO inappropriately based on specialty care over true primary care. A one-step assignment methodology could also introduce additional instability into the assignment process. Therefore, we did not propose to combine the two steps used under the current assignment methodology.

Although we did not propose this change, we sought comments as to whether it would be preferable, after excluding the physician specialties listed in Table 3 (79 FR 72797) from the assignment process, to further simplify the assignment methodology by establishing an assignment process that involves only a single step.

We also welcomed any comments about the possible impact these potential changes to the assignment methodology might have on other CMS programs that use an assignment methodology that is generally aligned with the Shared Savings Program, such as PQRS GPRO reporting via the GPRO web interface and VM. We noted that, as previously discussed, we revised the assignment methodology for PQRS GPRO reporting via the GPRO web interface and VM in the CY 2015 PFS final rule with comment period that appeared in the November 13, 2014 **Federal Register** (79 FR 67790 and 79 FR 67962).

Comment: A few commenters addressed the desirability of establishing a one-step assignment methodology. Most of these supported maintaining the current two-step assignment process. These commenters were concerned that adopting a one-step assignment process could inappropriately reduce the focus on primary care. A few commenters supported further examination of the issue for future consideration. A commenter suggested that assignment should be solely based on the preponderance of ''evaluation and management services'' provided regardless of specialty because most doctors are able to bill these codes. Otherwise, the commenter noted that the assignment determination is arbitrary, because it assumes all services provided by the ''approved'' specialties and even true primary care physicians are all related to primary care services, which they are not. This commenter stated that commercial payers are already recognizing this and developing attribution methods accordingly.

Response: We agree with commenters that it is appropriate to continue to maintain the current two-step assignment process at this time. We do not agree with commenters that believe a two-step methodology is arbitrary. We believe that the revisions to the beneficiary assignment methodology included in this final rule will further strengthen our balanced assignment process, which simultaneously maintains the requirement to focus on primary care services in beneficiary assignment, while recognizing the necessary and appropriate role of specialists in providing primary care services, such as in areas with primary care physician shortages.

Comment: A commenter was in support of the changes to the assignment methodology, including removing certain specialists from step 2 but recommended that CMS allow an ACO to continue to include physician and non-physician providers who are not used in the assignment methodology on the ACO's annual, certified list of ACO providers/suppliers and consider all TINs and individual providers included on the list to meet PQRS GPRO reporting requirements through ACO reporting.

Response: Although not all providers and suppliers may provide services that are used to determine the assignment of

beneficiaries to an ACO, we believe that each of these entities has a role to play in the coordination of the care of FFS beneficiaries assigned to the ACO. For this reason, as discussed in section II.B.3. of this final rule, each NPI that has reassigned his or her billings to the TIN of the ACO participant must agree to participate and comply with program rules. Additionally, it is required that the ACO maintain and submit its list of ACO participants and ACO providers/suppliers in accordance with § 425.118. If not all providers and suppliers billing through the TIN have agreed to participate in the ACO and to comply with the program requirements, the ACO cannot add the ACO participant to its list. Therefore, ACOs must include all physicians and non-physician providers who bill under the TIN of an ACO participant on their annual, certified list of ACO providers/suppliers even if their services are not used in the assignment methodology.

FINAL ACTION: We appreciate the comments and will continue to consider them when developing future rules.

5. Assignment of Beneficiaries to ACOs That Include FQHCs, RHCs, CAHs or ETA Hospitals

In this section, we summarize the regulatory policies in § 425.404 for assignment of beneficiaries to ACOs that include FQHCs and RHCs as ACO participants and subsequent operational procedures and instructions that we have established in order to allow FQHCs and RHCs as well as CAHs billing under section 1834(g)(2) of the Act (referred to as Method II), and ETA hospitals to fully participate in the Shared Savings Program. These types of providers may submit claims for physician and other professional services when certain requirements are met, but they do not submit their claims through the standard Part B claims payment system. Accordingly, we have established operational processes so that we can consider claims for professional services submitted by these providers in the process for assigning beneficiaries to ACOs. However, each of these four provider types (that is, FQHCs, RHCs, CAHs, and ETA hospitals) generally have differing circumstances with respect to their provider and medical service code reporting requirements, claims forms used, and the payment methodology that applies to professional services. Although there are important differences between the payment policy and claims processing for FQHCs and RHCs, they do share some key characteristics. Therefore, we will discuss FQHCs and RHCs jointly, and then address CAHs and ETA hospitals separately.

a. Assignment of Beneficiaries to ACOs That Include FQHCs and RHCs

(1) Overview

FQHCs and RHCs are facilities that furnish services that are typically furnished in an outpatient clinic setting. (See the proposed rule at 79 FR 72798 and 72799.) They are currently paid an all-inclusive rate (AIR) per visit for qualified primary and preventive health services furnished to Medicare beneficiaries. On October 1, 2014, FQHCs began to transition to a new FQHC prospective payment system (PPS). FQHCs have been required to use HCPCS coding on all their claims since January 1, 2011, to inform the development of the PPS and for limited other purposes, and will be required to use HCPCS coding for payment purposes under the FQHC PPS.

Based on detailed comments from some FQHC and RHC representatives, in the November 2011 final rule, we established a beneficiary assignment process that allows primary care services furnished in FQHCs and RHCs to be considered in the assignment process for any ACO that includes an FQHC or RHC as an ACO participant. This process is codified in the regulations at § 425.404. Operationally we assign beneficiaries to ACOs that include FQHCs or RHCs in a manner generally consistent with how we assign beneficiaries to other ACOs based on primary care services performed by physicians as described previously. However, to address the requirement under section 1899(c) of the Act that beneficiaries be assigned to an ACO based on their use of primary care services furnished by physicians, we require ACOs that include FQHCs or RHCs to identify, through an attestation (see § 425.404(a)), the physicians that provide direct patient primary care services in their ACO participant FQHCs or RHCs. We use the combination of the FQHC or RHC ACO participant TIN (and other unique identifier such as CCN, where appropriate) and the NPIs of the FQHC or RHC physicians provided to us through an attestation process to identify those beneficiaries who received a primary care service from a physician in the FQHC or RHC and who are therefore eligible to be assigned to the ACO as provided under § 425.402(a)(1). Then, we assign those beneficiaries to the ACO, using the step-wise assignment methodology under § 425.402(a)(1) and (2), if they received the plurality of their primary care services, as determined based on allowed charges for the HCPCS codes and revenue center codes included in the definition of primary care services at § 425.20, from ACO professionals.

The special procedures that we have established in the November 2011 final rule and through operational program instructions are discussed in detail in the proposed rule (79 FR 72799). FQHC and RHC services are billed on an institutional claim form and require special handling to incorporate them into the beneficiary assignment process. For FQHCs/RHCs that are ACO participants, we treat a FQHC or RHC service reported on an institutional claim as a primary care service performed by a primary care physician if the claim includes a HCPCS or revenue center code that is included in the definition of a primary care service at § 425.20 and the service was furnished by a physician who was identified as providing direct primary care services on the attestation submitted as part of the ACO's application. All such physicians are considered primary care physicians for purposes of the assignment methodology and no specialty code is required for these claims. If the claim is for a primary care service furnished by someone other than a physician listed on the attestation, we treat the service as a primary care service furnished by a non-physician ACO professional.

For FQHCs/RHCs that are not ACO participants, we assume a primary care physician performed all primary care services. We chose to assume such primary care services were furnished by primary care physicians so that these services would be considered in step 1 of the assignment methodology. We established this operational procedure to help make sure we do not disrupt established relationships between beneficiaries and their care providers in non-ACO participant FQHCs and RHCs by inappropriately assigning beneficiaries to ACOs that are not primarily responsible for coordinating their overall care.

(2) Proposed Revisions

As currently drafted, § 425.404(b) conflates the question of whether a service billed by an FQHC or RHC is provided by a physician with the question of whether the service is a primary care service. As a consequence, the provision arguably does not address situations where the FQHC/RHC claim is for a primary care service as defined under § 425.20, but the NPI reported on the claim is not the NPI of a physician included in the attestation submitted under § 425.404(a). Therefore, we

proposed to revise § 425.404(b) to better reflect the program rules and operational practices as previously outlined. In addition, we proposed to revise § 425.404(b) to reflect the proposal discussed earlier to revise § 425.402 to include services furnished by NPs, PAs, and CNSs as services that will be considered in step 1 of the assignment process. Under these proposals, we would assign beneficiaries to ACOs that include FQHCs and RHCs in the following manner.

To address the requirement under section 1899(c) of the Act that beneficiaries be assigned to an ACO based on their use of primary care services furnished by physicians, we would continue to require ACOs that include FQHCs and RHCs to identify, through an attestation process (see § 425.404(a)), the physicians who provide direct patient primary care services in their ACO participant FQHCs or RHCs. Under the proposal we would use this attestation information only for purposes of determining whether a beneficiary is assignable to an ACO because he or she meets the criteria of having received a primary care service from a physician the FQHC/RHC has designated on their attestation list. We refer to this determination under § 425.402(a) and (b)(1) as being the assignment ''pre-step''. If a beneficiary is identified as an ''assignable'' beneficiary in the assignment pre-step, then we would use claims for primary care services furnished by all ACO professionals submitted by the FQHC or RHC in determining whether the beneficiary received a plurality of his or her primary care services from the ACO under Step 1. We proposed to make revisions to § 425.404(b) to reflect these policies.

We have also encountered instances where an assignable beneficiary has received primary care services from FQHCs or RHCs that are not participants in an ACO. For non-ACO participant FQHCs and RHCs, we have previously assumed that all of their primary care services are performed by primary care physicians. However, as discussed in the proposed rule (see 79 FR 72800) this special assumption for non-ACO FQHCs/RHCs would no longer be necessary under the proposed revision to the assignment methodology at § 425.402 to consider primary care services furnished by NPs, PAs, and CNSs in step 1 of the assignment methodology rather than step 2. Under this proposed revision, all primary care services furnished by non-ACO FQHCs/RHCs would be considered in step 1 of the assignment methodology, and there would no longer be a need to assume such primary care services were provided by primary care physicians in order to achieve this result.

We welcomed comments on our proposed revisions to § 425.404(b) and our current procedures for using claims submitted by FQHCs and RHCs in the assignment methodology and suggestions on how we might further support participation of FQHCs and RHCs in the Shared Savings Program in a manner that is consistent with the statutory requirements.

Comment: Commenters agreed that CMS should recognize all FQHC/RHC care provided by PAs, NPs and CNSs as primary care. Commenters also agreed that if a beneficiary is identified as an ''assignable'' beneficiary in the assignment pre-step, then it is appropriate to recognize FQHC/RHC care provided by all ACO professionals under Step 1 assignment.

Response: We agree with these commenters. We believe it is important to clarify the rules to better reflect current operating procedures, and also to revise them to reflect the final policy discussed earlier to include services furnished by non-physician practitioners in step 1 of the assignment process.

Comment: A commenter supported including all ACO participant non-physician practitioners in the assignment process in step 1 but excluding any non-ACO participant non-physician practitioners during step 1 in order to facilitate assignment of beneficiaries receiving services at FQHCs/RHCs.

We disagree with the suggestion to include ACO participant non-physician practitioners during step 1 but to exclude claims billed under a non-ACO participant TIN by non-physician practitioners during step 1. We are concerned that this approach could lead to beneficiaries being assigned to an ACO, even if some other entity is primarily responsible for managing their care. This result would be contrary to our policy goal of assigning beneficiaries to the entity that is primarily responsible for their overall care.

Comment: A few commenters objected to the statutory requirement that beneficiaries be assigned on the basis of primary care services furnished by physicians, a requirement that is satisfied by the pre-step in CMS' assignment methodology.

Response: As discussed earlier in this section, the pre-step is designed to satisfy the statutory requirement under section 1899(c) of the Act that beneficiaries be assigned to an ACO based on their use of primary care services furnished by physicians. We refer to this determination under § 425.402(a)(1) and (b)(1) as being the assignment ''pre step''. We must retain the pre-step as part of the assignment methodology in order to comply with the requirements of section 1899(c) of the Act.

FINAL ACTION: We are finalizing our proposal to amend § 425.404 to use FQHC/RHC physician attestation information only for purposes of determining whether a beneficiary is eligible to be assigned to an ACO. If a beneficiary is identified as ''assignable'' then we will use claims for primary care services furnished by all ACO professionals submitted by the FQHC or RHC to determine whether the beneficiary received a plurality of his or her primary care services from the ACO under Step 1. We recognize the unique needs and challenges of rural communities and the importance of rural providers in assuring access to health care. FQHCs, RHCs and other rural providers play an important role in the nation's health care delivery system by serving as safety net providers of primary care and other health care services in rural and other underserved areas and for low-income beneficiaries. We have attempted to develop and implement regulatory and operational policies to facilitate full participation of rural providers in the Shared Savings Program, within the statutory requirements for the program.

b. Assignment of Beneficiaries to ACOs That Include CAHs

In the proposed rule (see 79 FR 72801) we briefly addressed certain issues regarding ACOs that include CAHs billing under section 1834(g)(2) of the Act (referred to as method II). Professional services billed by method II CAHs are reported using HCPCS/CPT codes and are paid using a methodology based on the PFS. However, method II CAH claims that include professional services require special processing because they are submitted as part of institutional claims. Therefore, we have developed operational procedures that allow these claims to be considered in the assignment process under § 425.402. Although we did not make any new proposals regarding the use of services billed by method II CAHs in the assignment process, we noted that our procedures for incorporating claims billed by method II CAHs into the assignment methodology are available on our Web site at *http://www.cms.gov/Medicare/Medicare-Fee-for-Service-Payment/sharedsavingsprogram/*

Downloads/Shared-Savings-Losses-Assignment-Spec-v2.pdf (see section 3.3.)

Comment: A few commenters supported the process for using claims billed by method II CAHs in the assignment methodology.

Response: We appreciate the supportive comments. We did not make any new proposals regarding the assignment of beneficiaries receiving primary care services furnished by method II CAHs but included this discussion in the proposed rule to promote understanding of our processes.

FINAL ACTION: We will continue including claims for primary care services billed by method II CAHs in the beneficiary assignment process under § 425.402 using established procedures.

c. Assignment of Beneficiaries to ACOs That Include ETA Hospitals

In the proposed rule (79 FR 72801 and 72802), we discussed in detail the operational procedures that we have established in order to include primary care services performed by physicians at ETA hospitals in the assignment of beneficiaries to ACOs. ETA hospitals are hospitals that, under section 1861(b)(7) of the Act and § 415.160 of our regulations, have voluntarily elected to receive payment on a reasonable cost basis for the direct medical and surgical services of their physicians in lieu of Medicare PFS payments that might otherwise be made for these services. We have developed special operational instructions and processes (see 79 FR 72801 and 72802) that enable us to include primary care services performed by physicians at ETA hospitals in the assignment of beneficiaries to ACOs under § 425.402.

In summary, we use institutional claims submitted by ETA hospitals in the assignment process because ETA hospitals are paid for physician professional services on a reasonable cost basis through their cost reports and no other claim is submitted for such services. However, ETA hospitals bill us for their separate facility services when physicians and other practitioners provide services in the ETA hospital and the institutional claims submitted by ETA hospitals include the HCPCS code for the services provided. We use the HCPCS code included on this institutional claim to identify whether a primary care service was rendered to a beneficiary in the same way as for any other claim. These institutional claims do not include allowed charges, which are necessary to determine where a beneficiary received the plurality of primary care services as part of the assignment process. Accordingly, we use the amount that would otherwise be payable under the PFS for the applicable HCPCS code, in the applicable geographic area as a proxy for the allowed charges for the service.

In the proposed rule, we explained that we believe it is appropriate that ETA hospitals and their patients benefit from the opportunity for ETA hospitals to fully participate in the Shared Savings Program to the extent feasible. Therefore, we proposed to revise § 425.402 by adding a new paragraph (c) to provide that when considering services furnished by physicians in ETA hospitals in the assignment methodology, we would use the amount payable under the PFS for the specified HCPCS code as a proxy for the amount of the allowed charges for the service. In addition, because we are able to consider claims submitted by ETA hospitals as part of the assignment process, we also proposed to amend § 425.102(a) to add ETA hospitals to the list of ACO participants that are eligible to form an ACO that may apply to participate in the Shared Savings Program.

We sought comments on the use of institutional claims submitted by ETA hospitals for purposes of identifying primary care services furnished by physicians in order to allow these services to be considered in the assignment of beneficiaries to ACOs. We also sought comments on whether there are any other types of potential ACO participants that submit claims representing primary care services that CMS should also consider including in (or excluding from) its methodology for assigning beneficiaries to ACOs participating in the Shared Savings Program.

Comment: A few commenters supported the proposal, pointing out that beneficiaries in medically underserved populations could benefit from the improved care coordination ACOs with ETA hospitals may provide. A commenter opposed the proposal but offered little explanation. A commenter requested clarification of how CMS would be modifying its operational processes for including primary care services performed by physicians in ETA hospitals to reflect a change in coding policy under the OPPS effective for services furnished on or after January 1, 2014. Effective January 1, 2014, CMS will recognize HCPCS code G0463 (Hospital outpatient clinic visit for assessment and management of a patient) for payment under the OPPS for outpatient hospital clinic visits. Also, effective January 1, 2014, CPT codes 99201 through 99205 and 99211 through 99215 are no longer recognized for payment under the OPPS. Under the OPPS, outpatient hospitals were instructed to use HCPCS code G0493 in place of 99201 through 99205 and 99211 through 99215.

Response: Since the December 2014 proposed rule was issued, new information has come to light about how clinic visits are billed under OPPS, effective January 1, 2014. This change affects our operational processes for considering ETA hospital claims in the assignment methodology for the Shared Savings Program because under OPPS, outpatient hospitals including ETA hospitals, no longer report CPT codes in the range 99201 through 99205 and 99211 through 99215. Instead, as noted by the commenter, outpatient hospitals report all such services using a single HCPCS code, G0463. That is, for ETA hospitals, G0463 is a replacement code for CPT codes in the range 99201 through 99205 and 99211 through 99215. Therefore, we need to further consider our ETA proposal and will address this coding issue in future rulemaking. We continue to believe that it is appropriate to use ETA institutional claims for purposes of identifying primary care services furnished by physicians in ETA hospitals in order to allow these services to be included in the stepwise methodology for assigning beneficiaries to ACOs. We believe that including these claims increases the accuracy of the assignment process by helping to ensure that beneficiaries are assigned to the ACO or other entity that is actually managing the beneficiary's care. ETA hospitals are often located in underserved areas and serve as providers of primary care for the beneficiaries they serve.

FINAL ACTION: We will further consider the operational processes necessary in order to allow ETA hospital outpatient claims to continue to be considered in the assignment methodology and will address these issues in future rulemaking

6. Applicability Date for Changes to the Assignment Algorithm

As indicated in the **DATES** section of this final rule, the effective date for the final rule will be 60 days after the final rule is published. However, we proposed that any final policies that affect beneficiary assignment would be applicable starting at the beginning of the next performance year. We stated that implementing any revisions to the assignment methodology at the beginning of a performance year is reasonable and appropriate because it would permit time for us to make the necessary programming changes and

would not disrupt the assessment of ACOs for the current performance year. Moreover, we proposed to adjust all benchmarks at the start of the first performance year in which the new assignment rules are applied so that the benchmark for an ACO reflects the use of the same assignment rules as would apply in the performance year. For example, any new beneficiary assignment policies that might be included in a final rule issued in 2015 would apply to beneficiary assignment starting at the beginning of the following performance year, which in this example would be January 1, 2016. In this hypothetical example, we would also adjust performance benchmarks that apply for the 2016 and subsequent performance years, as applicable, to reflect changes in our assignment methodology.

In addition, under the proposal we would not retroactively apply any new beneficiary assignment policies to a previous performance year. For example, if the assignment methodology is applied beginning in 2016, we would not use it in mid-2016 to reconcile the 2015 performance year. Accordingly, the assignment methodology used at the start of a performance year would also be used to conduct the final reconciliation for that performance year.

Comment: Commenters agreed with the proposal to adjust benchmarks at the start of the first performance year in which the new assignment rules are applied so that the benchmark for the ACO reflects the use of the same assignment rules as would apply in the performance year.

Response: We agree and believe uniformly applying any change to the assignment methodology at the beginning of a performance year will mitigate disruptions in implementing changes in the beneficiary assignment policies.

FINAL ACTION: We are finalizing our proposal to adjust all benchmarks at the start of the first performance year in which the new assignment rules are applied so that the benchmark for the ACO reflects the use of the same assignment rules as will apply in the performance year. Additionally, we will not retroactively apply the new beneficiary assignment methodology to the previous performance year. In other words, when conducting the final retrospective reconciliation of beneficiary assignment for PY 2015 during mid-2016, we will use the assignment methodology that was applicable at the start of 2015.

F. Shared Savings and Losses

1. Background

Section 1899(d) of the Act establishes the general requirements for payments to participating ACOs. Specifically, section 1899(d)(1)(A) of the Act provides that ACO participants will continue to receive payment ''under the original Medicare fee-for-service program under parts A and B in the same manner as they would otherwise be made,'' and that an ACO is eligible to receive payment for shared Medicare savings provided that the ACO meets both the quality performance standards established by the Secretary, and demonstrates that it has achieved savings against a benchmark of expected average per capita Medicare FFS expenditures. Additionally, section 1899(i)(3) of the Act authorizes the Secretary to use other payment models in place of the one-sided model outlined in section 1899(d) of the Act as long as the Secretary determines these other payment models will improve the quality and efficiency of items and services furnished to Medicare beneficiaries without additional program expenditures.

In our November 2011 final rule (76 FR 67904 through 67909) establishing the Shared Savings Program, we considered a number of options for using this authority. For example, commenters suggested we consider such options as blended FFS payments, prospective payments, episode/case rate payments, bundled payments, patient centered medical homes or surgical homes payment models, payments based on global budgets, full or partial capitation, and enhanced FFS payments for care management. However, in the November 2011 final rule (76 FR 67905), we opted not to use our authority under section 1899(i) of the Act to integrate these kinds of alternative payment models at that time, noting that many of the suggested payment models were untested. We expressed concern that immediately adopting untested and/or unproven models with which we had little experience on a national scale could lead to unintended consequences for the FFS beneficiaries we serve or for the health care system more broadly. We also noted that the Affordable Care Act had established a new Center for Medicare and Medicaid Innovation (Innovation Center) at CMS. The Innovation Center is charged with developing, testing, and evaluating innovative payment and service delivery models in accordance with the requirements of section 1115A of the Act. Many of the approaches suggested by stakeholders and commenters on the Shared Savings Program rule are the subject of ongoing testing and evaluation by the Innovation Center. In the November 2011 final rule (76 FR 67905), we noted that while we did not yet have enough experience with novel payment models to be comfortable integrating them into the Shared Savings Program at the time, we anticipated that what we learned from these models might be incorporated into the program in the future. Since publication of the December 2014 proposed rule, the Innovation Center has announced several important developments related to its testing of ACO models. In May 2015, the Secretary announced that an independent evaluation report for CMS found that the Pioneer ACO Model generated over $384 million in savings to Medicare over its first 2 years—an average of approximately $300 per assigned beneficiary per year—while continuing to deliver high-quality patient care. The CMS Office of the Actuary certified the Pioneer ACO model, as tested during the first 2 performance years of the Model, to have met the criteria for expansion to a larger population of Medicare beneficiaries. See News release ''Affordable Care Act payment model saves more than $384 million in 2 years, meets criteria for first-ever expansion'' (May 4, 2015) available online at *http://www.hhs.gov/news/press/2015pres/05/20150504a.html*. In March 2015, the Innovation Center announced the launch of the Next Generation ACO Model, whose first performance year begins January 1, 2016, building upon experiences from the Pioneer ACO Model and the Medicare Shared Savings Program. The Next Generation ACO Model uses refined benchmarking methods that reward both attainment and improvement in cost containment, and that ultimately transition away from comparisons to an ACO's historical expenditures. The Model also offers a selection of payment mechanisms to enable ACOs to progress from FFS reimbursements to capitation. Central to the Next Generation ACO Model are several ''benefit enhancement'' tools to help ACOs improve engagement with beneficiaries, including:

- Greater access to home visits, telehealth services, and skilled nursing facility services;
- Opportunities to receive a reward payment for receiving care from the ACO and certain affiliated providers;
- A process that allows beneficiaries to confirm their care relationship with ACO providers; and
- Greater collaboration between CMS and ACOs to improve communication

with beneficiaries about the characteristics and potential benefits of ACOs in relation to their care.

In the November 2011 final rule establishing the Shared Savings Program (76 FR 67909), we created two tracks from which ACOs could choose to participate: A one-sided risk model (Track 1) that incorporates the statutory payment methodology under section 1899(d) of the Act and a two-sided model (Track 2) that is also based on the payment methodology under section 1899(d) of the Act, but incorporates performance-based risk using the authority under section 1899(i)(3) of the Act to use other payment models. Under the one-sided model, ACOs qualify to share in savings but are not responsible for losses. Under the two-sided model, ACOs qualify to share in savings with an increased sharing rate, but also must take on risk for sharing in losses.

In the November 2011 final rule (76 FR 67904), we explained that offering these two tracks would create an on ramp for the program to attract both providers and suppliers that are new to value-based purchasing as well as more experienced entities that are ready to share in losses. We stated our belief that a one-sided model would have the potential to attract a large number of participants to the program and introduce value-based purchasing broadly to providers and suppliers, many of whom may never have participated in a value-based purchasing initiative before. Another reason we included the option for a one-sided track with no downside risk was that this model would be accessible to and attract small, rural, safety net, and physician-only ACOs.

However, we also noted that while a one-sided model could provide incentives for participants to improve quality, it might not be sufficient incentive for participants to improve the efficiency and cost of health care delivery (76 FR 67904). Therefore, we used our authority under section 1899(i)(3) of the Act to create a performance-based risk option, Track 2, where ACOs would not only be eligible to share in savings, but also must share in losses. We believe a performance-based risk option would have the advantage of providing more experienced ACOs an opportunity to enter a sharing arrangement that provides greater reward for greater responsibility. During our initial rulemaking, we explained that both CMS and stakeholders believe that models where ACOs bear a degree of financial risk hold the potential to induce more meaningful systematic change. Therefore, the program's policies were initially designed to offer a pathway for ACOs to transition from the one-sided model to risk-based arrangements. Therefore, we required that ACOs who participate in Track 1 during their first agreement period must transition to Track 2 for all subsequent agreement periods. We believe that offering the two tracks, but requiring a transition to Track 2 in subsequent agreement periods, would increase interest in the Shared Savings Program by providing a gentler ''on ramp'' while maintaining the flexibility for more advanced ACOs to take on greater performance-based risk in return for a greater share of savings immediately upon entering the program (76 FR 67907).

Although most of the program requirements that apply to ACOs in Track 1 and Track 2 are the same, the financial reconciliation methodology was designed so that ACOs that accept performance-based risk under Track 2 would have the opportunity to earn a greater share of savings. Thus, the same eligibility criteria, beneficiary assignment methodology, benchmark and update methodology, quality performance standards, data reporting requirements, data sharing provisions, monitoring for avoidance of at-risk beneficiaries, provider screening, and transparency requirements apply to ACOs under both models. However, the financial reconciliation methodology was modified for Track 2 in order to allow an opportunity for ACOs to earn a greater share of savings, in exchange for their willingness to accept performance-based risk. Specific differences between the two tracks include the minimum savings rate (MSR), the sharing rate based on quality performance, and the performance payment limit.

In the December 2014 proposed rule, we reiterated our intent to continue to encourage ACOs' forward movement up the ramp from the one-sided model to performance-based risk. The proposed rule discussed policy changes that would both allow ACOs not yet ready to transition to performance-based risk a second agreement period under the one-sided model, while also encouraging ACOs to enter performance-based risk models by lowering the risk under the existing Track 2, and offering an additional two-sided model (Track 3). As proposed, Track 3 would be based on the current payment methodology under Track 2, but would also incorporate some different elements that may make it more attractive for entities to accept increased performance-based risk, including: Prospective beneficiary assignment, and greater risk for greater reward (as compared to the current Track 2). We proposed modifications to the requirements for ACOs to establish an adequate repayment mechanism as a condition to participate under the two-sided model, including changes to address concerns that the existing requirements tie up capital that otherwise could be used to implement the care processes necessary to succeed in the program. We also sought comment on other ways to encourage ACO participation in performance-based risk arrangements, including the following:

- Waiving certain payment and program requirements.
- Incorporating beneficiary attestation, under which an eligible beneficiary would have the opportunity to voluntarily align with the ACO in which their primary healthcare provider participates.
- ACO participant arrangements which would allow ACOs to make a step-wise transition to performance-based risk arrangements.

Further, we sought comment on alternative methodologies for establishing, updating, and resetting ACO benchmarks based on concerns about the sustainability of the program under the current policies.

In this section, we discuss our final actions on the proposals for modifying the program's financial models, as well as the options on which we sought comment, including alternative benchmarking methodologies and potential policies to further encourage ACO participation in performance-based risk arrangements (for example, by waiving certain payment and program requirements and adopting beneficiary attestation). Table 8 summarizes the differences between the one-sided and two-sided models and specifies the characteristics of the Tracks as finalized under the November 2011 final rule and with this final rule.

2. Modifications to the Existing Payment Tracks

a. Overview

In the November 2011 final rule, we established policies to encourage ACOs not only to enter the program, but also to progress to increased risk based on the believe that payment models where ACOs bear a degree of financial risk have the potential to induce more meaningful systematic change in the behavior of providers and suppliers. Therefore, we established a requirement that an ACO entering the program under Track 1 may only operate under the one-sided model for its first agreement period. For subsequent agreement periods, an ACO would not be

permitted to operate under the one-sided model (§ 425.600(b)). If the ACO wishes to participate in the program for a second agreement period, it must do so under Track 2 (shared savings/losses). Additionally, an ACO experiencing a net loss during its initial agreement period may reapply to participate in the program, but the ACO must identify in its application the cause(s) for the net loss and specify what safeguards are in place to enable the ACO to potentially achieve savings in its next agreement period (§ 425.600(c)). In our view, this allowance for a full first agreement period under the one-sided model and required transition to performance-based risk in the subsequent agreement period struck a balance between our intent to encourage program participation by small, rural, or physician-only ACOs with the need to ensure that ACOs quickly transition to taking downside risk.

We are encouraged by the popularity of the Shared Savings Program, particularly the popularity of the one-sided model. Most ACOs participating in the Shared Savings Program have chosen Track 1, with only 5 ACOs participating under Track 2 as a starting option. About half of the ACOs participating in the program are small, each having less than 10,000 assigned beneficiaries. In the December 2014 proposed rule we explained that we believe that one 3-year agreement period under Track 1 is sufficient for many organizations to progress along the on-ramp to performance-based risk. We reiterated that we continue to encourage forward movement up the ramp because we believe, as discussed in the November 2011 final rule (76 FR 67907), that payment models where ACOs bear a degree of financial risk have the potential to induce more meaningful systematic change in providers' and suppliers' behavior. However, based on our experience with the program, we recognized that many of the organizations that are currently participating in the program are risk averse and lack the infrastructure and readiness to manage increased performance-based risk. We explained that given the short time period between finalization of the November 2011 final rule and the first application cycles, it is our impression that many ACOs, particularly smaller ACOs, focused initially on developing their operational capacities rather than on the implementation of care redesign processes. We expressed some concerns about the slope of the on-ramp to performance-based risk created by the two existing tracks and the policy that requires ACOs in Track 1 (shared savings only) to transition to Track 2 (shared savings/losses) for their second agreement period. In particular we explained our concern that the current transition from one- to two-sided risk may be too steep for some organizations, putting them into a situation where they must choose between taking on more risk than they can manage or dropping out of program participation altogether. For instance, some smaller and less experienced ACOs will likely drop out of the program when faced with this choice, because the smaller an ACO's assigned beneficiary population, the greater the chances that shared losses could result from normal variation. Also, we explained the concern, as expressed by some stakeholders, that one agreement period under the one-sided model may be not be a sufficient amount of time for some ACOs to gain the level of experience with population management or program participation needed for them to be comfortable taking on performance-based risk. For some organizations, having additional experience in the Shared Savings Program under Track 1 could help them to be in a better position to take on performance-based risk over time. We also expressed concern that the existing features of Track 2 may not be sufficiently attractive to ACOs contemplating entering a risk-based arrangement.

In the December 2014 proposed rule we revisited our policies related to Tracks 1 and 2 in order to smooth the on ramp for organizations participating in the Shared Savings Program. First, we proposed to remove the requirement at § 425.600(b) for Track 1 ACOs to transition to Track 2 after their first agreement period. Second, we proposed to modify the financial thresholds under Track 2 to reduce the level of risk that ACOs must be willing to accept. We explained that we believe there are a number of advantages to smoothing the on ramp by implementing these proposed policies as follows:

- Removing the requirement that ACOs transition to a two-sided model in their second agreement period would provide organizations, especially newly formed, less experienced, and smaller organizations, more time to gain experience in the program before accepting performance-based risk, thereby encouraging continued participation in the program by potentially successful ACOs that would otherwise drop out because of the requirement to transition to the two-sided model in their second agreement period.
- Allowing organizations to gain more experience under a one-sided model before moving forward to a two-sided model would encourage earlier adoption of the shared savings model by organizations concerned about being required to transition to performance-based risk before realizing savings under a one-sided model.
- Incorporating the opportunity for ACOs to remain in Track 1 after their first agreement period could have a beneficial effect with respect to the care that beneficiaries receive. Specifically, to the extent that more ACOs are able to remain in the program, a potentially broader group of beneficiaries will have access to better coordinated care through an ACO.
- Allowing ACOs additional time to make the transition to performance-based risk would reduce the chances that a high-performing ACO, which believe that it is not yet ready to assume greater financial risk, will either cease to participate in the program to avoid risk or find it necessary to engage in behaviors primarily intended to minimize that risk rather than improve patient care.

Further, we explained our expectation that ACOs participating in the Shared Savings Program move in the direction of accepting performance-based risk. Thus, while we proposed to offer additional time for ACOs under a one-sided model, we also indicated there should be incentives for participants to voluntarily take on additional financial risk and disincentives to discourage organizations from persisting in a shared savings only risk track indefinitely. To signal to ACOs the importance of moving toward performance-based risk and encourage ACOs to voluntarily enter the two-sided model as soon as they are able, we proposed to distinguish the financial attractiveness of the one-sided model from the two-sided model by dropping the sharing rate in Track 1 for ACOs participating in Track 1 for a subsequent agreement period and modifying the risk inherent in Track 2. Finally, we explained that adopting restrictions to prevent organizations that have not achieved certain minimum performance requirements with respect to cost and quality of care, based on their experience to date, from obtaining additional agreement periods under Track 1 would serve as an appropriate program safeguard against entities remaining in the program that are not fully committed to improving the quality and efficiency of health care service delivery. We received many comments regarding the overall framework we outlined in the proposed

rule for modifying the existing payment tracks under the Shared Savings Program.

Comment: Some commenters urged CMS to strengthen the program's existing financial tracks, suggesting alternatives that went beyond the modifications discussed in the December 2014 proposed rule. Some commenters pointed out that as designed, the program's existing financial models inadequately reward ACOs for the savings they generate, discourage ACOs who are working to achieve program goals, and pose hardships for ACOs who rely on shared savings payments to support their operational costs needed to sustain their participation in the program.

Some commenters explained that increasing the opportunity for savings under Track 1 is a means of encouraging continued program growth and sustainability of ACOs, and is a means for ensuring ACOs become ready to enter the two-sided model. Some commenters specifically addressed how to make performance-based risk arrangements under the program more attractive and to encourage ACOs to transition to risk, citing the importance of certain factors such as:

- Enhanced financial rewards, for example through a lower/fixed MSR, or eliminating the MSR, or revising the MSR methodology; higher sharing rates; and policies to reward ACOs who are trending positive (whose expenditures are lower than their benchmarks but who have not met or exceeded their MSR).
- Reduced liability for risk under the two-sided model, for example through a higher MLR, or lower loss sharing rates (that is, a phase-in to higher loss sharing rates over time), and lower loss limits (that is, a gentler phase-in of the loss limit by starting at zero and progressing to 10 percent).
- Tools to enable ACOs to more effectively control and manage their patient population, for example through prospective beneficiary assignment, beneficiary attestation, improved data sharing, and regulatory and programmatic flexibilities.
- Additional safeguards against risk, for instance in the form of CMS-subsidized stop loss insurance and funding for ACOs seeking to move to risk to make sure they have adequate cash reserves.

Commenters typically recommended a combination of these factors. Some commenters' recommendations were specific to certain types of entities. In particular, commenters recommended improving the financial incentives for smaller ACOs, rural ACOs, and existing low-cost ACOs.

Several commenters underscored the need for ACOs to be successful in Track 1 before moving to two-sided risk. A commenter explained that ACOs should not be expected to participate in the Shared Savings Program with upside risk under Track 1 with one set of rules, but then undertake downside risk under a different set of rules. Along these lines, some commenters urged CMS to apply the same assignment methodology and allow the same regulatory and programmatic flexibilities under the one-sided model that apply to the two-sided model, explaining that doing so could: (1) allow Track 1 ACOs to gain experience with these program features before accepting risk under the same terms; (2) stimulate success within the program by Track 1 ACOs and allow them to more quickly move to a two-sided risk track; and (3) reduce administrative burden on CMS for implementing the program.

Some commenters supported policies that would allow ACOs to move from the one-sided to two-sided risk within a given agreement period. Several commenters suggested allowing ACOs to move from Track 1 to a two-sided risk track annually, so that ACOs ready to assume more risk do not have to wait until a new agreement period to change tracks. Several commenters recommending CMS move to 5 or 6 year agreements for ACOs suggested that ACOs have the opportunity to move to a performance-based risk model during their first agreement period, for example, after their first 3 years under the one-sided model. A commenter suggested encouraging ACOs to transition to two-sided risk by offering lower loss sharing rates for ACOs that move from Track 1 to the two-sided model during the course of an agreement period, and phasing-in loss sharing rates for these ACOs (for example, 15 percent in year 1, 30 percent in year 2, 60 percent in year 3). Another commenter suggested that CMS allow all ACOs (regardless of Track) the option to increase their level of risk annually during the agreement period.

Response: In the December 2014 proposed rule we did not propose or seek comment on modifications to the design of Track 1 to increase the opportunity for reward under this model, such as revisions to the Track 1 MSR methodology. Although we appreciate commenters' thoughtful recommendations for improving the rewards under Track 1, we consider these suggestions beyond the scope of this final rule and we decline at this time to adopt commenters' recommendations. Further, we continue to believe it is important to maintain the MSR under the one-sided model to protect against paying shared savings based on changes in cost that result from normal variation in expenditures. We also remain committed to the belief that ACOs who accept financial responsibility for the care of beneficiaries have the greatest beneficial effects for the Medicare program and its beneficiaries. Keeping with the initial design of the program, the differences between the tracks encourage ACOs to transition from one-sided risk to two-sided risk by providing greater reward to those who accept greater risk. We believe that adjusting the sharing rate and the other aspects of the Track 1 financial model to match more closely, or exactly, the up-side available under the two-sided risk tracks would undermine our effort to encourage ACOs to transition to performance-based risk.

We appreciate commenters' thoughtful considerations on how to encourage ACOs to transition to performance-based risk. As indicated in other sections of this final rule, we are finalizing certain modifications to program policies to encourage ACOs to enter performance-based risk arrangements. These modifications respond to commenters' recommendations for improving the financial incentives under the program and allowing ACOs a range of options with respect to features of the tracks they may select from (for example, prospective versus retrospective assignment methodology and level of risk in relation to opportunity for reward). Although we are not adopting the additional suggestions recommended by some commenters in this rule, we will further consider these suggestions and may propose additional revisions to encourage ACOs to enter performance-based risk arrangements through future notice and comment rulemaking.

b. Transition From the One-Sided to Two-Sided Model

(1) Second Agreement Period Under Track 1

We considered several options to better balance both our intent to encourage continued participation by ACOs that entered the program under the one-sided model but that are not ready to accept performance-based risk after 3 years of program participation with our concern that allowing a shared savings only option will discourage ACOs capable of taking risk from moving to a two-sided model. We considered the following options:

• Revising the regulations to allow ACOs that enter the program under the one-sided model to continue participation in Track 1 for more than one agreement period.

• Extending the initial 3-year agreement period for an additional 2 years for ACOs that enter the program under Track 1, but that do not believe that they are ready to advance to a risk-based track.

• Allowing ACOs to continue participation in Track 1 for more than one agreement period, but revising the one-sided model to decrease the financial attractiveness of the model, so as to encourage ACOs ready to accept performance-based risk to transition to a two-sided model. Among these options, we expressed our belief that the third option offered a good balance of encouraging continued participation in addition to encouraging progression along the on-ramp to performance-based risk. Therefore, we proposed to remove the requirement at § 425.600(b) that ACOs that enter the program under Track 1 (one-sided model) must transition to Track 2 (two-sided model) after one agreement period, if they wish to continue participating in the Shared Savings Program. Instead, we proposed to revise the regulation to permit ACOs that have completed a 3-year agreement under Track 1 to enter into one additional 3-year agreement under Track 1.

Comment: Most commenters generally supported policies that would allow Track 1 ACOs to continue in the program under the one-sided model, with many commenters addressing the specifics of the proposed policies and offering alternative suggestions.

Most commenters generally and strongly supported policies that would permit ACOs to participate in the Shared Savings Program under a one-sided model for a longer period of time, indicating that the transition to performance-based risk under the current rule is too soon and steep for most ACOs. A commenter indicated that the progression to risk outlined in the current rule was too aggressive in light of the challenges ACOs and CMS faced during the initial program startup period.

The majority of commenters strongly supported our specific proposal to permit one additional agreement period under Track 1. Generally commenters agreed with CMS' concern about the transition to risk posed by the existing rule, which could require organizations to choose between taking on more risk and exiting the program after one agreement period. Commenters pointed to a variety of benefits from allowing ACOs additional time under the one-sided model:

• Allows ACOs more than 3 years to mature and develop the necessary infrastructure and capabilities, in which they have invested significant time and capital, to meet the program's goals, including: testing patient-centered approaches, providing care management services, implementation of electronic medical records (EMRs), and performing data analytics and risk assessment.

• Affords ACOs additional time needed to develop the infrastructure and experience needed to assume greater risk. Comments explained that ACOs need more than 3 years to develop the necessary infrastructure and competencies to effectively manage down-side risk. A commenter explained that past experience from the PGP demonstration and the Pioneer ACO Model indicates that providers need more than 3 years to produce meaningful savings and to develop sufficient skills to manage downside risk. Indeed, several commenters explained that some Track 1 ACOs may not be risk averse, but rather are reluctant to enter a performance-based risk arrangement given concerns, such as the financial viability of shared savings for ACOs in low-cost regions, and the risk of program participation posed by the significant and incremental operational costs for ACOs.

• Encourages continued participation by existing ACOs and makes the program more attractive to prospective ACOs. Commenters emphasized the importance of giving ACOs the opportunity to generate savings to further fund their operations without risk of accountability for losses, for the success of ACOs and the program. Commenters indicated this issue may be especially relevant for smaller organizations and those less experienced with care redesign processes and with performance-based risk, existing low-cost ACOs (which may need additional time to further their care management efforts to achieve additional savings), and ACOs led by academic medical centers (which tend to treat sicker and more complex patient populations than other providers). A commenter indicated the importance of continued participation by Advance Payment Model ACOs under Track 1, in order for CMS to recoup pre-paid shared savings from these organizations.

Some commenters opposed the proposal to allow ACOs to continue under the program for only one additional agreement period, favoring a slower transition to risk than was proposed. These commenters suggested that CMS offer multiple agreement periods under Track 1 (for instance two full agreement periods and part of a third agreement period). Others recommended alternatives such as permitting select types of ACOs, such as rural- or physician-only ACOs, or existing low-cost ACOs, to continue under Track 1 for more than two agreement periods. A commenter suggested allowing ACOs to remain in Track 1 as long as they meet program requirements or until additional risk-bearing payment models, such as full capitation, risk-adjusted capitations, and prepayment, are available under the program or both. A commenter suggested that any exemptions for ACOs from the requirement to transition to two-sided risk arrangements should be limited to those states where state law does not allow for contracts between payer and provider that incorporate downside risk.

On the other hand, a few commenters were opposed to this proposal, stating that ACOs should be capable of moving to risk in a more aggressive timeframe, and that eliminating the requirement to move to risk after the first agreement period sends the wrong signal. Several commenters pointed to private sector ACO initiatives to illustrate that organizations can be ready for two-sided risk within a few years. These commenters urged CMS to hasten the transition to performance-based risk by Track 1 ACOs, for instance by allowing them less than a full second agreement period under Track 1, or no additional time under Track 1.

More generally, some commenters stated their agreement with CMS' emphasis on the importance of two-sided risk as a driver of more meaningful change. A commenter explained: two-sided risk creates a greater onus of accountability, and ultimately encourages providers to respond to what patients need. It also injects greater momentum into the pace of change in the development of the care processes that are needed to achieve success in a risk environment. If there is no risk, the system may reward providers that are ACOs in name only.

However, in the drive to move ACOs to the two-sided model, other commenters urged CMS not to lose sight of the benefits of having robust participation under the one-sided model. Several commenters urged CMS not to overlook or withdraw its support from Track 1 ACOs, for instance pointing out that the Track 1 serves as the primary model for the vast majority of existing ACOs, and urging CMS to recognize the value that Track 1 brings to Medicare in capturing savings and serving as a vehicle for advancing new

models of care that create value for Medicare beneficiaries. A commenter was critical of the overall policy direction of the proposed rule, to encourage ACOs to move to performance-based risk, explaining that this was unjustified given that CMS is receiving substantial savings from ACOs participating under the one-sided model. A commenter cautioned CMS that the goal to incentivize ACOs to move into two-sided risk models should not overshadow the underlying statutory intent of the Shared Savings Program, which is to drive improvements in patient care and reductions in overall health care costs. A commenter noted the need for CMS to support Track 1 ACOs until they evolve into organizations that can better coordinate care of beneficiaries and take on additional risk. Another commenter noted that the perceived rush to move all ACOs to two-sided risk models undermines other CMS pilot programs, such as the Bundled Payments for Care Improvement (BPCI) and the Pioneer ACO Model.

Response: We are finalizing our proposal to permit ACOs to participate in an additional 3-year agreement period under Track 1, for a total of two agreement periods under the one-sided model. We believe giving ACOs one additional agreement under Track 1 is responsive to the many comments we received that some ACOs require additional time before moving to a two-sided risk arrangement. In particular, we are persuaded by commenters' urging of the need for ACOs to gain additional experience under accountable care models before transitioning to performance-based risk, as well as the benefits to CMS and Medicare beneficiaries of encouraging continued participation by ACOs—including those who received Advanced Payments from the Innovation Center—in light of the alternative that these ACOs would terminate their participation altogether. We continue to believe that ACOs who accept responsibility for the quality and cost of the care furnished to beneficiaries have the greatest positive effect on the Medicare program and its beneficiaries. We believe that allowing ACOs a second 3-year agreement period under the one-sided model strikes a reasonable balance between permitting ACOs additional time under Track 1 and maintaining a clear timeframe for when ACOs must transition to performance-based risk. We disagree with commenters' suggestions to allow select ACOs (based on their geographic location, historical cost or provider composition) to remain under the one-sided model indefinitely. We believe such a policy design would encourage ACOs to languish under the one-sided model. We also disagree with commenters who suggest that ACOs should be pushed to transition to performance-based risk in a shorter time, given the volume of concerns we heard as we developed the proposal to allow ACOs additional time under the one-sided model and from comments received in response to the proposed rule. We believe that a requirement for ACOs to immediately transition to risk after the conclusion of their first agreement period, or before the end of their second agreement period could result in significant attrition from the program, particularly by ACOs that are newly formed or underfunded.

Comment: Some commenters identified the most immediate challenges faced by ACOs with 2012 and 2013 agreement start dates who are considering renewing their agreement period for the 2016 performance year. For example, a commenter indicated that ACOs may lack the performance data needed at the time of agreement renewal (based on 2 performance years) to make an informed decision between a second agreement period under Track 1 or entering a performance-based risk arrangement. In addition, some commenters further pointed out they could have a relatively short period in which to make this decision given the short timeline CMS faces in issuing a final rule that would be effective for the 2016 performance year and implementing the finalized policies. In light of these factors, some commenters recommended that CMS allow current ACOs the option to extend their current contracts by 1, 2 or 3 years, or if they choose, to enter into a new agreement period under the two-sided model. These commenters explained that extension of the ACOs' existing agreements would allow certain ACOs more time to determine their readiness to change tracks and assume risk, while those that are prepared to accept new contract terms and shift to greater risk at this time could do so.

Some other commenters recommended instead that CMS extend the current ACO participation agreement from its current 3 years to a 5-year agreement, for all tracks, including not only the initial agreement, but all subsequent agreements. These commenters explained that this would make the program more attractive by increasing program stability and providing ACOs with the necessary time to achieve the desired quality and financial outcomes. However, a commenter expressed concern that rebasing every 5 years (as opposed to rebasing with each 3-year agreement) may not be authorized under section 1899(d) of the Act.

Response: Section 1899(d)(1)(B)(ii) of the Act specifies the benchmark shall be reset at the start of each agreement period, while section 1899(b)(2)(B) specifies the ACO shall enter into an agreement to participate in the program for not less than a 3-year period. While we have the authority under section 1899(b) of the Act to establish agreements for periods longer than a term of three years, we decline to take commenters' suggestions regarding extending the first agreement period for ACOs. We believe it is appropriate to maintain a 3-year agreement period to provide continuity with the design of the program finalized with the November 2011 final rule. Furthermore, we do not believe an extension of ACO's first agreement period is necessary, particularly to address the situation of ACOs whose agreements conclude December 31, 2015, given the modifications to the program's current rules that we are making in this final rule. For one, we are finalizing our proposal to permit ACOs to participate in an additional agreement period under Track 1. This change should alleviate concerns of commenters who favored extending the agreement period to make the program more attractive to Track 1 ACOs, particularly those who need additional time in Track 1 to become experienced with the accountable care model before transitioning to performance-based risk. Second, as explained in greater detail elsewhere in this final rule, we are modifying the rebasing methodology to make continued participation in the program more attractive to ACOs, particularly by equally weighting the benchmark years and accounting for savings generated under the ACO's prior agreement period. These modifications address commenters' concerns regarding the need for extended agreement periods to provide greater stability to ACO benchmarks. Further, we recognize that the longer the agreement period, the greater an ACO's chance to build on the success or continue the failure of its current agreement. Therefore we believe rebasing every 3 years, at the start of each agreement period, is important to protect both the Trust Funds and ACOs.

FINAL ACTION: We are finalizing our proposal to remove the requirement at § 425.600(b) that ACOs that enter the program under Track 1 (one-sided model) must transition to Track 2 (two-sided model) after one agreement period if they wish to continue participating in the Shared Savings Program. We are

revising the regulation to permit ACOs that have completed a 3-year agreement under Track 1 to enter into one additional 3-year agreement under Track 1. We have also made some minor revisions to the proposed language at § 425.600(b) to further clarify that ACOs may operate under the one-sided model for a maximum of two agreement periods.

(2) Eligibility Criteria for Continued Participation in Track 1

In section II.C.3. of this final rule, we discuss criteria for determining whether to allow ACOs that are currently participating in the program to renew their participation agreements for subsequent agreement periods. We proposed to make the option of participating in Track 1 for a second agreement period available to only those Track 1 ACOs that: (1) Meet the criteria established for ACOs seeking to renew their agreements (as discussed in section II.C.3. of this final rule, including demonstrating to CMS that they met the quality performance standard during at least 1 of the first 2 years of the previous agreement period); and (2) did not generate losses in excess of the negative MSR in at least 1 of the first 2 performance years of the previous agreement period. We explained that if the ACO's financial performance results in expenditures in excess of the negative MSR in only 1 of the first 2 performance years, then we would accept the ACO's request to renew its participation agreement under the one-sided model, provided all other requirements for renewal were satisfied. Through this proposed policy we aimed to encourage the continued participation of ACOs that are successful and have the potential to move toward accepting greater responsibility for the care of their beneficiaries. Further, we explained that the proposed policy would prevent consistently poor performers from being able to seamlessly continue in program participation under the one-sided model while permitting some leeway for ACOs that are new to the program and may have had some difficulty in cost or quality performance in 1 of the first 2 performance years. We further explained that these additional eligibility criteria would serve as an important safeguard to reduce the potential for ACOs to participate in the program for reasons other than a commitment to improving the value of health care services. We also recognized that because our assessment would be based on only 2 years of data, we would not have a complete picture of the ACO's performance during the agreement period. That is, an ACO may financially perform very poorly, exceeding the negative MSR in its first and second performance years, but demonstrate a trend in a direction that could ultimately lead to better performance in the third year. Under our proposal this ACO would not be permitted to renew its agreement under Track 1 for a second agreement period. However, we acknowledged that an argument could be made that this ACO simply needed the additional time under a one-sided model to gain experience and start improving. Therefore, we sought comment on whether we should also consider the direction the ACO's performance is trending when determining whether to permit renewal of an ACO's participation agreement under Track 1. We also sought comment on whether other options for such ACOs, short of refusing their participation in a second agreement period under Track 1, would better serve program goals. We noted that such ACOs would not be precluded from renewing their participation agreement in order to participate under a two-sided risk track, consistent with § 425.600(c). We also emphasized that in addition to meeting the specific criteria to be eligible to continue in Track 1, the ACO must also demonstrate that it meets the requirements to renew its agreement under proposed § 425.224, which would include the requirement that the ACO establish that it is in compliance with the eligibility and other requirements of the Shared Savings Program. While the eligibility criteria for renewing ACOs are discussed in detail in section II.C.3. of this final rule, the following discussion is limited only to the additional financial performance criterion proposed for determining the eligibility of Track 1 ACOs to continue under the one-sided model for a second agreement period.

Comment: Several commenters agreed with the proposed criteria for evaluating whether an ACO could continue under Track 1, for example indicating that the proposed criteria would reasonably hold ACOs accountable for noticeable improvement in their first agreement period. A commenter explained that it is important that failing organizations not continue ''free-riding'' the benefits of the program without showing clear signs of improving quality and controlling health care costs. Several other commenters also expressed direct support for the financial performance criterion as proposed.

However, several others recommended more stringent requirements than those we proposed, for instance suggesting CMS terminate the following categories of ACOs from the program:

- ACOs who do not demonstrate year-to-year improvements in controlling costs and improving quality.
- ACOs who failed to meet their benchmark under their first agreement period (or allow these ACOs to participate for a second agreement period only under a reduced sharing rate).

On the other hand, many commenters were opposed to using an ACO's prior financial performance, as proposed, to determine whether it should be permitted to continue under Track 1. Commenters offered a number of reasons for opposing a requirement that ACOs must not have generated losses in excess of their negative MSR in at least 1 of the first 2 performance years to be eligible to continue in Track 1:

- The policy may disadvantage certain ACOs that need more time to fully implement strategies in care management that consistently yield savings, such as newly formed, smaller and rural ACOs, and those with certain provider compositions (such as those that include teaching hospital participants).
- The policy may discourage providers from participating in ACOs because it sends a signal that CMS will ''pull the plug'' on underperforming ACOs, and seems not to recognize the significant start-up costs and learning curve to establish a successful ACO.
- It may be premature to judge an ACO's ability to perform on data from only 2 years of program participation, particularly as some ACOs have faced a steep learning curve.

Several commenters pointed to publicly available performance results in explaining that variation in generating savings and losses relates more to an ACO's benchmark per capita spending than to the ACO's number of assigned beneficiaries (and therefore its MSR under the one-sided model). In light of this information, commenters suggested that CMS reconsider the proposed financial performance requirement for continued participation in Track 1.

Some commenters requested greater leniency in determining whether ACOs can continue participating in Track 1 based on their past financial performance and suggested various alternatives to the proposed criteria which include the following:

- Removing the financial performance criterion altogether from the determination of whether an ACO is eligible to renew under Track 1, with some commenters suggesting CMS focus

more on ACO quality performance in determining their eligibility to renew their agreements.

- A case-by-case assessment of each ACO not meeting the criterion or a reconsideration process, or both, so that CMS can review any compelling reasons why the organization generated losses outside its negative MSR in its first 2 years and consider any mitigating factors (for example, patterns of performance improvement or changes in ACO composition).
- Consideration of the ACO's performance trend over the first 2 years, and if the ACO's financial or quality data showed improvement from the first to the second year, then it would be permitted to renew under Track 1, or permitting ACOs to continue in Track 1 under probationary status for 1 or 2 years to allow them time to demonstrate a change in trends.
- Permitting ACOs that exhibit bona fide efforts to pursue the program's goals to continue under Track 1.

A commenter indicated that entities should only be permitted the opportunity to renew under the one-sided model for one additional 3-year agreement, and entities that are unable to demonstrate adequate performance within 6 years should not be permitted to remain in the Shared Savings Program.

Several comments seemed to reflect commenters' misunderstanding of the proposed policy, interpreting it to mean that an ACO who either failed to satisfy the quality performance requirements in one of its first 2 performance years, or generated losses in excess of its negative MSR in one of its first 2 performance years would be ineligible to continue in Track 1 for a second agreement period. Another commenter seems not to have understood the proposed policy, believing CMS indicated that only ACOs with losses outside their negative MSR would be eligible to continue in Track 1 for a second agreement period.

Response: As discussed in section II.C.3. of this final rule, we are finalizing general criteria that will apply to all renewing ACOs, including the requirement that an ACO meet the quality performance standard during at least 1 of the first 2 years of its previous agreement period. We are persuaded by commenters' concerns that application of the additional proposed financial performance criterion for continued participation in Track 1 may come too early for ACOs who initially struggle to demonstrate cost savings in their first years in the program. Therefore, we are modifying our proposed criteria for an ACO to qualify for an additional agreement period under Track 1. We are not finalizing an additional renewal criterion for ACOs seeking to renew for a second agreement period under Track 1 that would consider the ACO's financial performance during its first 2 performance years in its prior agreement period. We believe that the general criteria that would apply to all renewing ACOs (see section II.C.3. of this final rule) are sufficient to address program integrity and program compliance concerns that failing organizations or those lacking a bona fide interest in the program would be allowed to continue their participation. Further, we believe our authority to monitor ACOs (§§ 425.316) allows us to take action to address ACOs who are outliers on financial performance by placing poorly performing ACOs on a special monitoring plan. Furthermore, if our monitoring reveals that the ACO is out of compliance with any of the requirements of the Shared Savings Program, we may request a corrective action plan and, if the required corrective action is not taken or satisfactorily implemented, we may terminate the ACO's participation in the program.

Comment: Several commenters made suggestions that CMS focus on establishing criteria for determining an ACO's readiness to transition to performance-based risk. Generally, some comments suggested that ACOs should be encouraged to adopt two-sided risk payment models as soon as they have the capacity to do so. Commenters offered a variety of suggestions on how CMS could determine an ACO's readiness to accept performance-based risk. A commenter suggested Track 1 ACOs whose performance year expenditures are lower than their benchmarks should move into the two-sided model. A commenter suggested requiring ACOs to achieve shared savings under Track 1 before being permitted to move to a two-sided model; another commenter suggested that ACOs transition to the two-sided model once they demonstrate success in the program by earning a shared savings payment in 2 consecutive performance years. A commenter suggested looking at the ACO's performance trends and whether it is accredited by NCQA or URAC in determining its readiness to transition to performance-based risk, and, if not, allowing an annual renewal process for up to 3 additional years under Track 1 beyond the first agreement period. A few commenters suggested that ACOs with a certain composition of ACO participants be required to transition to two-sided risk sooner, for instance suggesting that hospital/health system-led or sponsored ACOs should be pushed towards two-sided risk based on the belief that these ACOs are more entrenched in volume-based (as opposed to value-based) incentives. A commenter suggested that an ACO's risk sharing should vary based on its data sharing capabilities in relation to the availability of data sharing infrastructure in the state where it is located. According to this commenter, this approach would recognize the disparities in states' capabilities to share data through health information exchanges, and the higher costs for ACOs to develop data sharing infrastructure in states without robust, preexisting data sharing infrastructure.

More generally, a few commenters recommended allowing ACOs to remain in Track 1 until they can demonstrate readiness to accept performance-based risk. A commenter recommended that CMS continue to explore additional ways to provide Track 1 ACOs with a glide path to two-sided risk and articulate a defined point at which Track 1 ACOs must move into Track 2 or 3.

Response: Under the general framework of the Shared Savings Program, as modified by this final rule, ACOs participating under the one-sided model will be required to transition to the two-sided model or terminate their participation after the conclusion of their second agreement period under Track 1. As previously discussed, this policy balances the need for ACOs to gain more experience in the program under the one-sided model with the importance of ACOs transitioning to performance-based risk. We appreciate the suggestions around establishing criteria for determining ACO readiness to accept risk. However, we consider these comments beyond the scope of the proposals and other issues on which we sought comment in the December 2014 proposed rule, and decline at this time to implement additional requirements for determining an ACO's readiness to enter performance-based risk arrangements. As comments discussed elsewhere in this final rule indicate, the decision to enter performance-based risk is highly specific to each organization, and its perceived readiness to bear performance-based risk in relation to various other factors including (among others) its provider composition and historical cost performance and financial trends, assigned beneficiary population, and the benchmarking and shared savings/losses methodology under the Shared Savings Program.

FINAL ACTION: The general criteria described in section II.C.3. of this final rule apply to all renewing ACOs,

including Track 1 ACOs applying for a second agreement period under the one-sided model. Under § 425.224(b), CMS will evaluate an ACO's participation agreement renewal based on all of the following factors:

- Whether the ACO satisfies the criteria for operating under the selected risk model.
- The ACO's history of compliance with the requirements of the Shared Savings Program.
- Whether the ACO has established that it is in compliance with the eligibility and other requirements of the Shared Savings Program, including the ability to repay losses, if applicable.
- Whether the ACO met the quality performance standards during at least 1 of the first 2 years of the previous agreement period.
- For an ACO under a two-sided model, whether the ACO has repaid losses owed to the program that it generated during the first 2 years of the previous agreement period.
- The results of a program integrity screening of the ACO, its ACO participants, and its ACO providers/suppliers (conducted in accordance with § 425.304(b)).

We are not finalizing any additional financial performance criteria for determining the eligibility for Track 1 ACOs to continue under the one-sided model for a second agreement period. We have modified the proposed revisions to § 425.600(b) to reflect this final policy. Additionally we are making conforming changes to § 425.600(c). This provision currently specifies that an ACO with net losses in its initial agreement period that reapplies to participate under the program must identify in its application the cause(s) for the net loss and what safeguards are in place to enable the ACO to potentially achieve savings in the next agreement period. Specifically, we are revising the provision to apply to ACOs seeking to renew their participation agreements for a second or subsequent agreement period.

(3) Maximum Sharing Rate for ACOs in a Second Agreement Period Under Track 1

As part of our proposal to allow ACOs to participate in a second agreement period under the one-sided model, we proposed to reduce the sharing rate by 10 percentage points for ACOs in a second agreement period under Track 1 to make staying in the one-sided model less attractive than moving forward along the risk continuum. As a result, the maximum sharing rate for an ACO in a second agreement period under Track 1 would be 40 percent. Accordingly, in addition to our proposed change to § 425.600(b) to allow ACOs to participate under Track 1 for a second agreement period, we proposed to modify § 425.604(d) to provide that the maximum sharing rate during a second agreement period under Track 1 would be 40 percent.

We sought comment on this proposal. In particular, we requested input on whether a 40 percent sharing rate in a second agreement period under the one-sided model is sufficient to incentivize an ACO that may need more time to prepare to take on two-sided performance-based risk while also encouraging ACOs that are ready to take on performance-based risk to choose to continue participation in the Shared Savings Program under a two-sided model.

We also considered other variations and options for allowing ACOs additional time in the one-sided model. For example, we considered allowing ACOs to continue under Track 1 for a second agreement period without any changes to the sharing rate (that is, retaining the 50 percent sharing rate in the second agreement period). However, we expressed our concern that if ACOs are able to continue to receive up to 50 percent of savings in a second agreement period there may be insufficient incentive for many ACOs that may be ready to take on two-sided risk to move to a track with two-sided risk after their first agreement period. We specifically sought comments on the other options we considered, including extending an ACO's Track 1 agreement period for an additional 2-years rather than permitting two 3-year agreement periods under Track 1, permitting ACOs to participate in a second agreement period under Track 1 with no change to the sharing rate, and offering multiple agreement periods under Track 1 while reducing the sharing rate by 10 percentage points for each subsequent agreement.

Comment: Some commenters, including MedPAC, were in favor of reducing the sharing rate for ACOs in a second agreement period under Track 1. Several commenters noted the importance of moving ACOs to performance-based risk for driving meaningful changes by providers in health care quality and spending, and a commenter recognized that not all ACOs will be able to make this transition. In this commenter's view, CMS should not be focused on maximizing the number of ACOs in the program, rather it should be encouraging ACOs with robust ability to improve quality and control spending growth to be in the program and to reward them appropriately. Several commenters indicated that the proposed reduction of the sharing rate by 10 percentage points in the second agreement period strikes a reasonable balance between allowing promising ACOs to continue for a limited time without bearing risk and encouraging ACOs to transition to two-sided risk. Another commenter explained that the lower sharing rate would provide an incentive to entities that may be on the cusp of considering moving to a two-sided risk model. Several suggested dropping the rate to 45 percent for ACOs continuing under the one-sided model after their first agreement period in combination with increasing the sharing rate (for example, by at least 5 percentage points) under the two-sided model to serve as an incentive for ACOs to transition to performance-based risk. At the same time, several other commenters recommended dropping the sharing rate under the one-sided model even further, for example to 20 percent, 25 percent or 30 percent under the second agreement period, or making a 5 percentage point reduction for each year under the second agreement period. These commenters expressed concern that the proposed 10 percentage point reduction in the sharing rate for ACOs that continue in Track 1 may not be sufficient to encourage ACOs to more quickly accept performance-based risk.

However, a majority of the commenters were strongly opposed to reducing the sharing rate under a subsequent Track 1 agreement. These commenters cautioned that such a policy could have adverse effects on program participation, suggesting the reduction in sharing rate would be a significant disincentive for ACOs to continue in the program and may discourage ACOs from forming. In particular, ACOs may choose to leave the program, or not enter the program at all, if they determine they are not prepared to transition to performance-based risk tracks, which offer higher sharing rates, and the proposed 40 percent sharing rate under Track 1 is insufficient to justify the cost and effort required to reach and maintain the high level of performance needed to achieve success. Others stated their belief that reducing the sharing rate under the one-sided model is merely punitive. Commenters provided a variety of reasons why a reduction in sharing rate disadvantages ACOs and the program. Many pointed to the financial risk of ACO formation and participation in the program under the one-sided model due to the significant upfront investments necessary for ACO formation and ongoing operational costs to support

infrastructure (such as IT solutions) and process development, staffing, population management, care coordination, quality reporting, and patient education. Some explained that the existing sharing rate of 50 percent is too low, and a further reduction in the sharing rate would ratchet down the potential for ACOs to realize return on investment, which is the key for some organizations to continue funding their operations. Some commenters pointed to the phase-in of pay for performance for quality measures as a factor that will further reduce the sharing rate for Track 1 ACOs. Others pointed to the MSR as already providing an additional hurdle for Track 1 ACOs to cross before they may share in savings they generate. Others pointed to the program's first year financial performance results and the limited number of ACOs that shared in savings, indicating it is too soon to reduce the sharing rate since so few ACOs have begun to see any return on investment. Another commenter pointed out that a reduced sharing rate would impair ACOs' ability to appropriately reward participating providers. Taken together, commenters explained their belief that this level of return on investment is not sustainable for ACOs and could result in ACOs leaving the program. A few commenters noted the particular importance of maintaining the sharing rate for small, provider-based and rural ACOs. A commenter suggested sustaining the sharing rate at 50 percent under the one-sided model could encourage small, rural ACOs to enter and remain in the program, explaining that these types of entities may face a steeper learning curve in developing the capacity to meet the program's goals (for instance needing more time to fully implement strategies in care management that consistently yield savings and developing collaborations across providers to enable effective care management), and require additional capital and human resources to succeed. Several commenters explained that a reduced sharing rate under the one-sided model does not improve the attractiveness of the two-sided model. Others explained that maintaining the current sharing rate could provide ACOs with the funds needed to support the ACO and to prepare for managing increased performance-based risk.

In the alternative, some commenters recommended the following different approaches that would maintain the Track 1 sharing rate at 50 percent, slow the reduction of the sharing rate, or increase the sharing rate for ACOs that continue under Track 1 after their first agreement period:

- Increase the sharing rate, for example, to over 80 percent.
- Allow ACOs to continue in Track 1 indefinitely with no reduction in sharing rate.
- Allow ACOs to continue in Track 1 for more than 2 agreement periods with a continued reduction in sharing rate (for example, a 10 percentage point decrease) for each subsequent agreement. Several commenters suggested a slower phase-in of the reduction of the sharing rate, for example by reducing the sharing rate below 50 percent starting in the third agreement period.
- Allow Track 1 ACOs the opportunity to extend their initial 3 year agreement by 2 or 3 additional years, and to maintain the 50 percent sharing rate during these additional years.
- Decreasing the sharing rate only for select ACOs as a means of encouraging these ACOs to move to the two-sided model while providing sufficient incentive for ACOs with less success to continue to innovate in a subsequent agreement period under Track 1. For instance, decreasing the sharing rate for ACOs that demonstrated shared savings in their first agreement period, or decreasing the sharing rate for higher-cost ACOs (or requiring these ACOs to accept performance-based risk) while increasing the sharing rate for lower-cost ACOs.

A few commenters suggested that certain types of ACOs should be exempt from the reduction in sharing rate, such as rural ACOs, and ACOs comprised largely of practicing physicians or primary care physicians (as opposed to ACOs that include a hospital or health system as an ACO participant).

Response: We were influenced by the comments indicating that a reduced sharing rate under the one-sided model does not necessarily increase the attractiveness of the two-sided model, but rather could impede the progression to risk by ACOs needing additional experience with the accountable care model. Specifically, we are persuaded by comments suggesting that maintaining the sharing rate at a maximum of 50 percent for Track 1 may result in payments to ACOs that in turn can be used by ACOs to prepare their infrastructure and financial reserves for transitioning to performance-based risk. We further believe this policy helps address concerns of commenters about the need for ACOs to achieve a return on investment through shared savings, and in particular, could encourage continued participation by ACOs who have not yet been eligible for a performance payment by the time they must determine whether to continue in the program for a second agreement period. Further, since we are only permitting one additional agreement period under the one-sided model, as opposed to multiple additional agreement periods, we believe it is reasonable to sustain the maximum sharing rate at 50 percent. In light of this determination, we decline to accept the suggestions by commenters to further reduce the sharing rate for ACOs who continue under Track 1 (to lower than 40 percent). Given our interest in ACOs progressing to performance-based risk, we decline to accept the recommendations to more slowly transition ACOs to performance-based risk arrangements, such as the suggestions to allow multiple agreement periods under Track 1 with the same or a progressively decreasing sharing rate. We also decline to select certain ACOs for eligibility for a reduced sharing rate, based on past performance, composition or geography, because we believe the previously noted considerations that support maintaining the sharing rate at 50 percent are applicable to ACOs of varying forms and locations. At the same time, we believe that decreasing the sharing rate for ACOs who remain under the one-sided model would provide little if no incentive for ACOs to eventually transition to performance-based risk, and could result in ACOs languishing under the one-sided model. Therefore, we are finalizing a policy that would offer continuation of the 50 percent sharing rate to ACOs participating in a second agreement under Track 1.

FINAL ACTION: We are not finalizing our proposed amendment to section 425.604(d) to reduce the maximum sharing rate during an ACO's second agreement period under Track 1. Therefore, an ACO participating under Track 1 for a second agreement period that meets all the requirements for receiving shared savings payments under the one-sided model will receive a shared savings payment of up to 50 percent of all savings, as determined on the basis of its quality performance, as currently specified under § 425.604(d).

(4) Eligibility for Continued Participation in Track 1 by Previously Terminated ACOs

In light of our proposed revisions to § 425.600 to permit an ACO to participate under Track 1 for a second agreement period, we proposed conforming changes to § 425.222(c) to permit previously terminated Track 1 ACOs to reapply under the one-sided model. We proposed that, consistent

with our existing policy under § 425.222(c), an ACO whose agreement was terminated less than half way through the term of its participation agreement under Track 1 would be permitted to reapply to the one-sided model as if it were applying for its first agreement period. If the ACO were accepted to reenter the program, the maximum sharing rate would be 50 percent. However, in the case of an ACO that was terminated more than half way through its initial agreement under the one-sided model, we proposed to revise § 425.222(c) to permit this ACO to reapply for participation under the one-sided model, but to provide that the ACO would be treated as if it were applying for a second agreement period under Track 1. Thus, if the ACO were approved to participate in the program again, the reduced sharing rate of 40 percent would apply. An ACO whose prior agreement under Track 2 was terminated would still be precluded from applying to participate under Track 1. We sought comment on these proposals.

We further noted in December 2014 proposed rule that the option to participate under the one-sided model agreement in a subsequent agreement period is only available to ACOs that have completed or are in the process of completing an agreement under the one-sided model. That is, we would not permit an ACO that had participated under a two-sided model to subsequently participate under a one-sided model.

Comment: We received very few comments on these proposals. A commenter supported the proposal to allow previously terminated ACOs to reapply to Track 1 if they can still meet the necessary eligibility requirements and demonstrate the capability to meet program financial and quality targets.

Several commenters disagreed with the policy that an ACO that was previously terminated from Track 2 would not be allowed to reapply to Track 1. These commenters explained that it may be more prudent for these organizations to reapply for Track 1 and then move to Track 2 when they are ready. A commenter specifically suggested that CMS should allow any ACO, regardless of what track it entered the program under and when it was terminated, to reapply for Track 1 at a 50 percent sharing rate. A commenter suggested that an ACO that was terminated from Track 2 should be allowed to enter into Track 1; however, under these circumstances the ACO should be required, as part of its application, to provide detailed plans for correcting the deficiencies noted under the prior agreement.

A commenter expressed support for an existing program policy specified at § 425.222(a) of the regulations, under which an ACO that has been terminated from the Shared Savings Program under §§ 425.218 or 425.220 may participate in the Shared Savings Program again only after the date on which the term of the original participation agreement would have expired if the ACO had not been terminated. The commenter explained that it is important to recognize that not all ACOs are immediately able to assume the full responsibility of shared savings. The onboarding process of becoming an ACO and developing the capabilities to achieve shared savings takes some organizations longer than anticipated, especially given some of the uncertainties of a new program. The commenter recommended that those ACOs that re-enroll in the program should be required to demonstrate improvement in the capabilities necessary to succeed under a shared savings model. The commenter recommended that CMS revisit at a later time the issue of whether and under what conditions previously terminated ACOs should be allowed to reapply.

Response: Under our final policy to allow Track 1 ACOs who continue under the one-sided model for a second agreement period to be eligible for a maximum sharing rate of 50 percent based on quality performance, the issue of when to apply a reduced sharing rate for previously terminated ACOs who reapply to Track 1 is superseded. However, we are finalizing our proposed approach for determining whether an ACO previously terminated from Track 1 is re-entering the program under its first or second agreement period under Track 1, specifically an ACO whose agreement was terminated—

- Less than half way through its first agreement under the one-sided model will be permitted to reapply to the one-sided model as if it were applying for its first agreement period; or
- More than half way through its first agreement under the one-sided model will be permitted to reapply to the one-sided model and would be treated as if it were applying for a second agreement period under Track 1.

Since we are finalizing a policy under which ACOs may continue to participate in the one-sided model for a second agreement period, we believe it is important to clarify the choice of financial models for ACOs whose participation is terminated under their second agreement period and reapply to participate in the program. In addressing this issue, we believe it is important to align with the approach established by the original policy: To give an ACO whose participation was terminated before completing half of its agreement period the opportunity to reapply to enter the financial model it was participating under at the time of termination. Specifically:

- An ACO whose agreement was terminated less than half way through its second agreement period under the one-sided model will be permitted to reapply to the one-sided model and would be treated as if it were applying for a second agreement period under Track 1.
- An ACO whose agreement was terminated more than half way through its second agreement under the one-sided model will only be permitted to reapply for participation under the two-sided model.

We are revising the regulation at § 425.222(c) to reflect this clarification.

We will not at this time to modify our current policy that prohibits an ACO whose prior agreement under Track 2 was terminated from applying to participate under Track 1. Commenters presented reasons for why ACOs who terminate from the two-sided model should be allowed to reenter the program under the one-sided model. However, in light of our decision to extend participation under Track 1 for a second agreement period, we believe it is especially important to establish policies to support an earnest transition to performance-based risk by Track 1 ACOs. Should we finalize a policy that allows terminated two-sided model ACOs to reapply to Track 1, we are concerned this would create an opportunity for Track 1 ACOs to enter the two-sided model and quickly terminate in an effort to reset the clock on the participation in the one-sided model.

Further, we appreciate commenter's suggestions about the need for terminated ACOs reapplying to the program to demonstrate their capacity to achieve program goals. As we established in the 2011 final rule, a terminated ACO reapplying to the program must describe the reason for termination of its initial agreement and explain what safeguards are now in place to enable the prospective ACO to participate in the program for the full term of its participation agreement. We continue to believe it is an important beneficiary and program protection to limit participation in the program to providers and suppliers who are dedicated to the goals of the program.

We appreciate the commenters' support for the existing policy under

which a previously terminated ACO may participate in the Shared Savings Program again only after the date on which the term of the original participation agreement would have expired if the ACO had not been terminated. As we explained in the 2011 final rule (76 FR 67961), we continue to believe that in order to ensure protection for beneficiaries and the program, ACOs should not be allowed to re-enter the Shared Savings Program before the conclusion of their initial agreement period.

FINAL ACTION: We are finalizing our proposal to permit previously terminated Track 1 ACOs to reapply under the one-sided or two-sided model and to differentiate between whether the ACO will be applying for its first or second agreement period under Track 1 based on when the ACO terminated its previous agreement. Accordingly, we are finalizing the proposed changes to § 425.222(c), but are making additional revisions to clarify the treatment of previously terminated Track 1 ACOs that were in their second agreement period at the time of termination.

c. Modifications to the Track 2 Financial Model

To complement the proposals to extend ACOs' participation under Track 1 for a second agreement period to smooth the on ramp to risk, we proposed to modify the financial model under Track 2 for ACOs choosing this two-sided option to further encourage ACOs to accept increased performance-based risk. Specifically, we proposed to retain the existing features of Track 2 with the exception of modifying the threshold that Track 2 ACOs must meet or exceed in order to share in savings (minimum savings rate (MSR)) or losses (minimum loss rate (MLR)) from the current flat 2 percent to vary based upon the size of the ACO's assigned beneficiary population, as determined based on the methodology for setting the MSR under the one-sided model in § 425.604(b) as shown in Table 8. We explained in the December 2014 proposed rule that, as compared to the MSR used for Track 1, the flat 2 percent MSR/MLR generally offers a lower savings threshold for Track 2 ACOs to meet in order to share in savings, and was established in recognition of the Track 2 ACOs' willingness to assume the risk of incurring shared losses (79 FR 72807). The proposal to vary the Track 2 MSR/MLR based on the number of beneficiaries assigned to the ACO would reduce risk for smaller ACOs by increasing the threshold before they would have to share in additional costs that they incur for the program. In turn, smaller ACOs would also have to achieve a greater level of savings under a higher MSR in order to share in savings (79 FR 72807). We explained our belief that by building in greater downside protection, this proposal might help smooth the on-ramp to performance-based risk for ACOs, particularly ACOs with smaller assigned populations and those with less experience with population management, making the transition to a two-sided model more attractive. With the proposed addition of Track 3 to the program, discussed later in this section, we explained that Track 2 could be viewed as a first step for some organizations to accepting performance-based risk.

TABLE 6—PROPOSED MINIMUM SAVINGS RATE AND MINIMUM LOSS RATE FOR TRACK 2

Number of beneficiaries	MSR/MLR (low end of assigned beneficiaries) (%)	MSR/MLR (high end of assigned beneficiaries) (%)
5,000–5,999	3.9	3.6
6,000–6,999	3.6	3.4
7,000–7,999	3.4	3.2
8,000–8,999	3.2	3.1
9,000–9,999	3.1	3.0
10,000–14,999	3.0	2.7
15,000–19,999	2.7	2.5
20,000–49,999	2.5	2.2
50,000–59,999	2.2	2.0
60,000 +	2.0%	

We explored other ways to reduce financial risk for ACOs participating under Track 2, such as increasing the MSR/MLR using a fixed percent. For example, we considered using an MSR and MLR threshold of 3 or 4 percent that would apply to all ACOs participating in Track 2. We sought comments on this proposal as well as other options that could potentially make Track 2 more financially attractive to ACOs. We requested that commenters indicate why they believe an alternative option would be more attractive to ACOs than the one proposed and the specific reason why the option would be beneficial. We also requested that commenters consider whether additional safeguards should be implemented to appropriately protect the Medicare Trust Funds, if an alternative approach were to be adopted.

Comment: Commenters generally agreed with our concern that the existing Track 2 features may not be sufficiently attractive for ACOs to take on performance-based risk. In particular, some commenters favored protecting Track 2 ACOs with smaller patient populations from losses, and for this reason supported higher MLRs for these ACOs. Several commenters, who favored limiting ACOs' exposure to risk, seemed to misunderstand the function of a higher MLR as being more protective of ACOs against financial risk.

Commenters for and against the proposed modification were fairly evenly divided. Some commenters supported our proposal to modify both the MSR and MLR to vary based on the size of the ACO's assigned population, stating that the variable rate would add protection from losses for smaller ACOs and encourage participation in Track 2. Several commenters suggested that if a variable rate were to be used in Track 2, the range be narrowed, for example to a range of 1.5 through 2.5 percent (or no more than 2 percent) based upon the size of the ACO's assigned population. A commenter, who supported the proposal, explained that the proposed methodology based on standard inferential statistics reduces the probability of rewarding or punishing changes in expenditures which could be attributed to normal variation.

Others opposed changes to current policy which would increase the MSR/MLR and recommended that we retain the flat 2 percent MSR/MLR for Track 2 ACOs. A commenter explained that ACO participants willing to take on risk should be rewarded with a lower MSR, not one that is the same as the MSR used in a non-risk track. Several commenters explained the need to keep the MSR/MLR low to motivate Track 1 ACOs to make the transition to Track 2, suggesting that a variable MSR could make the track very unattractive relative to Track 1 and act as a disincentive for ACOs to move into performance-based risk. Several commenters explained that many small and rural ACOs believe they are disadvantaged by being held to a MSR of 3.9 percent when larger ACOs have a MSR of 2.0 percent. These commenters indicated that CMS' proposal provided strong disincentives for small and rural entities to move into Track 2, as they would need to achieve almost twice the amount of savings as larger ACOs in order to receive a shared savings bonus.

Still others recommended alternative modifications to the MSR/MLR under Track 2, with some commenters' suggestions about modifying the MSR/MLR emerging from their descriptions of alternatives to make performance-based risk more attractive under Tracks 2 and 3 as opposed to comments specifically on the proposed revisions to the Track 2 MSR/MLR. Suggestions included—

- Permitting the ACO to choose its own MSR/MLR. Many commenters favored an approach that would allow ACOs a choice of options including: A fixed MSR/MLR of 2.0 percent, no MSR/MLR, or a variable MSR/MLR (for example, between 2–3.9 percent based upon number of assigned beneficiaries). Commenters explained that each organization is in the best place to determine the level of risk for which it is prepared, and thus should be given options to choose from, rather than being required to have a specific fixed or variable MSR and MLR. Several commenters indicated that allowing ACOs the choice of MSR/MLR would encourage ACOs to transition to the two-sided model and encourage participation in the program generally. Several commenters explained that a MSR/MLR are not necessary as normal variation will result in inaccuracies both above and below the benchmark that will balance each other out. However, a commenter—
- Favored not lowering the MSR/MLR below 1 percent, concerned it could result in savings or losses based on normal variation in utilization instead of changes in care for beneficiaries;
- Using a lower flat percent MSR/MLR, such as 1 percent; and
- Making the MLR variable (ranging from 2.0–3.9 percent) while using the flat 2 percent for the MSR. In this way, the ACO would be better protected from sharing in losses while enjoying a greater opportunity to share in savings.

Another commenter suggested that the MLR range be broadened to be higher, such as 4 percent; and setting the MLR higher, for example, at 5 percent, and allowing for a gradual reduction in the MLR over the course of time (for example, 1 percentage point per year) to ease the transition into risk.

A few commenters responded to CMS' request for feedback on whether additional safeguards should be implemented to appropriately protect the Medicare Trust Funds, if an alternative approach were to be adopted. A commenter specified that additional provisions are not needed to safeguard the Medicare Trust Funds because Medicare stands to benefit more from the participation of ACOs compared to the lack of participation by these organizations in the program altogether. Another commenter explained that the preservation of symmetry in the MSR/MLR creates protection for CMS.

Another commenter generally urged caution in making significant changes to the MSR/MLR rates going forward as such changes could negatively impact organizational planning. A commenter emphasized the importance of making the MSR/MLR the same under Track 2 and 3, to ensure equity across all ACOs assuming two-sided risk.

Response: We are persuaded by commenters' statements that ACOs are best positioned to determine the level of risk which they are prepared to accept. We also agree with commenters that ACOs under the two-sided model should be allowed to select from a range of MSR/MLR options. Given the relatively even divide among commenters favoring and disfavoring the proposal to vary the Track 2 MSR/MLR by the number of assigned beneficiaries, we are also convinced this methodology is one of several options that ACOs should be allowed to choose from. However, we disagree with the options suggested by commenters to modify the range (for example, to lower the minimum or increase the maximum) based upon the ACO's number of assigned beneficiaries. We developed this range based on the range established for Track 1 ACOs in the initial rulemaking establishing the Shared Savings Program, and as a commenter pointed out, it was established based on standard inferential statistics. This approach reduces the probability of rewarding or punishing changes in expenditures which could be attributed to normal variation. We believe some ACOs want to have their MSR/MLR set based on this methodology. We also believe that increasing the MLR much higher above 3.9 percent may provide too great of a shield for ACOs entering the two-sided model. Therefore, it could foster the transition to risk by ACOs who have no intention of driving meaningful change in the quality and cost of the care furnished to their Medicare FFS beneficiaries.

In defining the other MSR/MLR options for ACOs to choose from, as ae commenter pointed out, we believe it is important to preserve a symmetrical up- and down-side. We also agree with the comment that ACOs accepting performance-based risk should have the option to choose an MSR/MLR as low as 0 percent, since an ACO in this position would have a significant incentive to make meaningful changes in the quality and cost of care for its beneficiaries since it would be liable for risk beginning at the first dollar. To maximize flexibility on the MSR/MLR in response to comments expressing concerns that the MSR is too onerous, we believe it is also appropriate to offer ACOs a choice of a symmetrical MSR/MLR in increments of 0.5 percent between 0.5 percent and 2.0 percent.

Therefore, we are modifying our proposal in order to give an ACO in Track 2 the ability to choose from a menu of options for setting its MSR and MLR for the duration of its agreement period. The menu of choices, reflecting our desire to retain symmetry between upside and downside risk, includes—

- Remove the MSR/MLR (the ACO shares in savings/losses from the first dollar);
- Select a symmetrical MSR/MLR in a 0.5 percent increment between 0.5–2.0 percent; and
- Implement a MSR/MLR that varies based on the size of the ACO's assigned population according to the methodology established under the one-sided model.

Track 2 ACOs would have the opportunity to select their MSR/MLR prior to the start of their agreement period, as part their initial program application or agreement renewal application. No modifications to this selection would be permitted during the course of the agreement period.

We believe that allowing Track 2 ACOs to customize their symmetrical MSR/MLR threshold for risk vs reward,

and implementing an identical approach under Track 3, is responsive to commenters' requests for greater flexibility in setting the threshold the ACO must meet before the ACO is eligible to share in savings or be accountable for losses. Further, we believe offering ACOs a choice of MSR/MLR will encourage ACOs to move to two-sided risk. For instance, ACOs who are more hesitant to enter a performance-based risk arrangement may choose a higher MSR/MLR, to have the protection of a higher threshold on downside risk, although they would in turn have a higher threshold to meet before being eligible to share in savings. ACOs who are comfortable with a lower threshold to protect them against risk of losses, may select a lower MSR/MLR to benefit from a corresponding lower threshold for sharing in savings. We also believe that applying the same MSR/MLR methodology in both of the two risk-based tracks reduces complexity for CMS' operations and establishes more equal footing between the risk models.

FINAL ACTION: We will retain the existing features of Track 2 with the exception of revising § 425.606(b) to allow ACOs entering Track 2 for agreement periods beginning January 2016 or later a choice among several options for establishing their MSR/MLR: (1) 0 percent MSR/MLR; (2) symmetrical MSR/MLR in a 0.5 percent increment between 0.5–2.0 percent; and (3) symmetrical MSR/MLR that varies based on the ACO's number of assigned beneficiaries according to the methodology established under the one-sided model. Regarding this third option, the MSR for an ACO under Track 2 will be the same as the MSR that would apply in the one-sided model under § 425.604(b) and is based on the number of beneficiaries assigned to the ACO, and the MLR must be equal to the negative MSR. We are also adopting a requirement that ACOs must select their MSR/MLR prior to the start of each agreement period in which they participate under Track 2 and this selection may not be changed during the course of the agreement period.

3. Creating Options for ACOs That Participate in Risk-Based Arrangements

a. Overview

We proposed to develop a new risk-based Track 3 under § 425.610 which would be based on the current payment methodology under Track 2, but would also incorporate some different elements that may make it more attractive for entities to accept increased performance-based risk. We structured the features of Track 3 in light of our experience with the Shared Savings Program, comments from stakeholders, and early responses to the Pioneer ACO Model. In developing this new track, we aimed to encourage organizations to take on increasing financial risk in order to motivate even greater improvements in care and also to minimize the barriers faced by some ACOs that limit their willingness to accept performance-based risk. In evaluating what features might encourage ACOs to take on increasing financial risk, we considered several options, including modifying Track 1, modifying or eliminating Track 2, adding a new Track 3 to supplement the existing tracks, or a combination of these options.

In general, unless otherwise stated, we proposed to model Track 3 off the current provisions governing Track 2, which in turn are modeled on Track 1, and specifically to have the same general eligibility requirements, quality performance standards, data sharing requirements, monitoring rules, and transparency requirements. However, as we discuss later in this section, we proposed certain discrete features for Track 3 that differentiate it from Track 2. Specifically, we proposed to make modifications to the beneficiary assignment methodology, sharing rate, and performance payment and loss sharing limits.

Establishing Track 3 would require us to exercise our authority under section 1899(i)(3) of the Act, which requires that we determine that this policy: (1) ''. . . does not result in spending more for such ACO for such beneficiaries than would otherwise be expended . . . if the model were not implemented;'' and (2) ''. . . will improve the quality and efficiency of items and services furnished under this title.'' We applied this authority when proposing a two-sided risk-based model in our April 2011 proposed rule (76 FR 19603), which was modified and made final in in our November 2011 final rule (76 FR 67909). As discussed in our final rule (76 FR 67904), we stated our belief that Track 2 would provide an opportunity for organizations more experienced with care coordination and risk models that are ready to accept performance-based risk to enter a sharing arrangement that provides greater reward for greater responsibility. In the December 2014 proposed rule (see 79 FR 72809), we expressed our belief that proposed Track 3 would offer an additional opportunity for ACOs to accept greater responsibility for beneficiary care in exchange for the possibility of greater reward. Moreover, we explained our belief that adding a second two-sided risk model would not result in an increase in spending beyond what would otherwise occur. As discussed later in our Regulatory Impact Analysis of this final rule, our initial estimates suggested that the inclusion of Track 3 along with the other modifications to the program regulations would improve savings for the Trust Funds resulting from this program. Further, in the December 2014 proposed rule we explained our belief that adding Track 3 would improve the quality of care furnished to Medicare FFS beneficiaries because ACOs participating under Track 3 would have an even greater incentive to perform well on the quality measures in order to maximize the percentage of savings they may receive, while limiting their liability for any losses that might be incurred.

In this section we discuss our final actions on our proposed policies related to the creation of Track 3.

Comment: The majority of commenters providing feedback on the proposed Track 3 generally supported the addition of the new performance-based risk model based on prospective beneficiary assignment and offering ACOs multiple paths toward more accountable care. Many commenters supported the additional risk for greater reward that was offered under proposed Track 3 in relation to Track 2, with some commenters indicating that the addition of Track 3 will help beneficiaries realize the benefits of better care faster. A commenter specified the importance of allowing multiple risk-bearing tracks to enable ACOs to match their infrastructure and maturity to the appropriate regulatory framework. However, some commenters suggested modifications to Track 2 to make it closely match Track 3 (such as the balance of risk and reward, assignment, and availability of waivers, beneficiary attestation), calling into question the role of Track 2 in the program. A commenter suggested CMS eliminate Track 2 and offer only Tracks 1 and 3 to encourage transition to performance-based risk.

A few commenters were critical of the need for CMS to establish Track 3. A commenter supported CMS' interest in developing additional risk-based options, but suggested that actual implementation of Track 3 was premature, pointing out that few ACOs have entered Track 2. Therefore, few ACOs may be ready to take on the additional risk under Track 3. This commenter encouraged CMS to continue to gather and incorporate stakeholder feedback into the design of a Track 3. A commenter supported creation of a Track 3 generally, but suggested that it may not be needed if

much broader modifications were made to the design of the program's financial methodology.

Response: We appreciate commenters' support for Track 3 as a new option for a two-sided model under which ACOs have the opportunity to share in greater reward for accepting higher levels of risk. We agree with commenters who suggested the need to maintain Track 2 in addition to implementing Track 3 and to distinguish the features of these two-sided risk tracks to offer ACOs options, particularly with regard to assignment methodology and their level of risk and reward. As discussed in detail in the following sections, we are finalizing Track 3 with features that distinguish it from Tracks 1 and 2.

b. Assignment of Beneficiaries Under Track 3

Having considered the relative advantages and disadvantages of prospective and retrospective assignment methodologies for achieving improvements in the cost and quality of the care furnished to FFS beneficiaries, we proposed to implement a prospective assignment methodology, but only for Track 3 ACOs. The proposed design features were as follows:

- Using the same stepwise assignment methodology under § 425.402 to assign beneficiaries to ACOs participating under Track 3 as is currently used to assign beneficiaries to ACOs participating under Track 1 and Track 2. The result would be a prospective list of beneficiaries.
- Retrospectively excluding only those beneficiaries that appeared on the prospective assignment list that no longer meet eligibility criteria for assignment. The net effect would be to hold Track 3 ACOs accountable for beneficiaries who were prospectively assigned to the ACO based on having received primary care services from ACO professionals in the past, which would include beneficiaries that have received care from ACO professionals in the past, but who do not receive care from ACO participants during the performance year. This proposal reduces our concern that ACOs in Track 3 may avoid at-risk beneficiaries that appear on their prospective assignment list because they would be held accountable for the care of those beneficiaries, regardless of whether or not they choose to receive a plurality of their primary care services from ACO professionals.
- Basing prospective assignment on a 12-month assignment window (offset from the calendar year) prior to the start of the performance year. We further proposed to define an ''assignment window'' as the 12-month period used to assign beneficiaries to an ACO and to make conforming changes to the regulations to refer to the assignment window where appropriate.
- Prohibiting beneficiaries that are prospectively assigned to a Track 3 ACO from being assigned to any other Shared Savings Program ACO as part of the retrospective reconciliation for Track 1 and Track 2 ACOs.

(1) Prospective Versus Retrospective Assignment

In the November 2011 final rule that established the Shared Savings Program, we adopted a preliminary prospective assignment model with retrospective reconciliation because it would provide ACOs with adequate information to redesign their care processes while also encouraging ACOs to standardize these care processes for all Medicare FFS beneficiaries instead of focusing care management activities on a small subset of their FFS population. Further, we expressed our view that this approach would provide sufficient incentives for each ACO to provide quality care to its entire beneficiary population (76 FR 67864).

As an alternative, beneficiaries could be prospectively assigned to an ACO prior to the start of the performance year. In the December 2014 proposed rule, we discussed the use of prospective alignment in the Pioneer ACO Model, where beneficiaries are aligned to Pioneer ACOs prior to the start of each performance year. Under the Pioneer ACO Model, the list of prospectively aligned beneficiaries is reconciled at the end of the year to exclude certain beneficiaries from the list, for example, beneficiaries who were not eligible for alignment during the performance year; however, no new beneficiaries are added to the list. We explained that this alternative assignment methodology arguably provides Pioneer ACOs with a more targeted set of FFS beneficiaries on whom to focus their care redesign efforts during the performance year. Further, we noted that this improved certainty may be an important factor in an ACO's willingness to take on greater performance-based risk because the ACO may be better positioned to make decisions regarding where to make investments in infrastructure to deliver enhanced services.

We proposed to implement a prospective assignment methodology for Track 3 ACOs using the assignment algorithm that is specified in Subpart E of the Shared Savings Program regulations, and described in more detail in section II.E. of this final rule. This prospective assignment methodology would use the same stepwise assignment methodology under § 425.402 to assign beneficiaries to ACOs in Track 3 as is used to assign beneficiaries to ACOs participating under Track 1 and Track 2. The major difference would be that beneficiaries would be assigned to Track 3 ACOs prospectively, at the start of the performance year, and there would be no retrospective reconciliation resulting in the addition of new beneficiaries at the end of the performance year. The only adjustments that would be made at the end of the performance year would be to exclude beneficiaries that appeared on the prospective assignment list provided to the ACO at the start of the performance year that no longer meet eligibility criteria. For the reasons discussed in the November 2011 final rule (76 FR 67851), we explained that this proposed prospective assignment methodology meets the requirement under section 1899(c) of the Act that assignment be based on the ''utilization of primary care services'' provided by physicians that are ACO professionals. We also proposed to amend the regulations at § 425.400(a) by adding a new paragraph (3) to reflect this new prospective assignment methodology for Track 3.

We also sought comment on whether we should consider implementing the prospective assignment approach proposed for Track 3 under Track 2 and whether doing so would enhance or erode the incentives for organizations to take on risk.

Comment: Only a few commenters expressed reservations about moving to a prospective assignment model. A commenter strongly opposed implementing a prospective approach to assignment under any circumstances, expressing concerns that such an approach would result in inequalities of care by inappropriately shifting the ACO's focus to specific patients. Instead, the commenter stated that the current assignment methodology reduces potential inequalities in care by encouraging ACOs to redesign care processes to provide high quality and lower cost care to all FFS patients equally.

Nearly all commenters were generally supportive of implementing a prospective approach to assignment under Track 3. Commenters suggested that a prospective approach will permit ACOs to focus on specific beneficiaries and more generally on a stable assigned population, and consequently provide some certainty regarding where the ACO should focus its quality and cost efforts.

Commenters specifically detailed the following perceived benefits of prospective assignment:

- Allows ACOs to better apply population management techniques, including developing more effective systems to actively manage care for patients and engage patients.
- Gives providers stronger incentives to engage beneficiaries and their caregivers in care management activities; enables providers to focus on building long term relationships with patients.
- Allows ACOs to establish stabilized financial targets.
- Encourages transparency with assigned beneficiaries compared to retrospective assignment. Specifically, prospective assignment enables patients to be fully aware of any incentives providers may have in delivering their care and allows them to incorporate this understanding into the interactions they have with their care providers. Absent this information, patients may develop distrust in the system and unnecessarily switch physicians in order to opt-out of a program in which they may not even be included.

Other commenters pointed to challenges with the program's current preliminary prospective assignment methodology with retrospective reconciliation noting that it could stand in the way of ACOs achieving program goals and discourage participation in the program. In particular, commenters pointed to the quarterly churn of beneficiaries under the present assignment methodology as creating uncertainty for planning and implementing population health strategies and services and posing challenges for ACOs to accurately gauge the impact of new care programs and protocols. Given these challenges, a few other commenters expressed strongly that retrospective assignment should be eliminated from the program.

A comment reflected the commenter's misunderstanding that prospective assignment would limit beneficiaries to seeking care within the ACO. The commenter, supporting prospective assignment, explained that the current retrospective assignment methodology makes managing the cost and care of patients difficult because patients can seek primary care services from multiple providers, which can result in the patient no longer being assigned to an ACO.

Many commenters generally encouraged CMS to extend the option for prospective assignment beyond Track 3 to Tracks 1 and 2. Commenters emphasized the need for ACOs to know in advance the populations for which they are responsible to most effectively coordinate care for such individuals and benefit from the other perceived advantages of prospective assignment (previously noted). Some commenters expressed the need for ACOs in Track 1 to become familiar with prospective assignment, and other features considered for Track 3, to prepare them to enter performance-based risk arrangements that include these features. Others explained that for Track 2 ACOs to be successful, they should have the benefit of the Track 3 features, including prospective assignment, to give them greater certainty over their assigned populations.

Other commenters saw the value in both assignment methodologies—knowing upfront who the ACO's assigned population is under prospective assignment versus accountability for a population that is retroactively determined to have actually received the plurality of its care from ACO providers/suppliers—and encouraged CMS to allow all ACOs (Tracks 1, 2, and 3) a choice of prospective and retrospective assignment. Several commenters suggested CMS allow ACOs a choice of retrospective or prospective assignment annually, within the ACO's 3-year agreement period. A commenter suggested allowing rural ACOs the option to elect prospective assignment.

Several commenters emphasized the importance of beneficiary attestation in relation to assignment. A commenter, responding to the request for comment about extending prospective assignment to Track 2, explained that prospective assignment would not necessarily be preferable to the current retrospective assignment under Track 2, unless a methodology was implemented whereby a beneficiary would attest to affirm his or her prospective assignment to the ACO prior to being assigned to the ACO, and the ACO was able to offer incentives, such as reduced cost sharing, to the beneficiary for receiving services within the ACO's network. Another commenter suggested that CMS allow ACOs the option to have patients assigned exclusively based on patient designation (attestation) instead of based on retrospective or prospective assignment.

Several comments reflect the need to better analyze the impact of assignment on beneficiaries' care. A commenter encouraged CMS to compare beneficiary awareness and satisfaction scores between the different assignment models (retrospective and prospective) to test the theory that prospective assignment increases beneficiary awareness, which in turn improves patient satisfaction. If either or both of these increase, the commenter encouraged CMS to expand the prospective assignment methodology to the other Tracks. A commenter disagreed with CMS' belief that retrospective assignment offers strong incentives for health system redesign to impact the care for all FFS beneficiaries that receive care from ACO providers/suppliers, and that retrospective assignment limits the potential for gaming and reduces the motivation to target beneficiaries for avoidance. The commenter suggested ACOs should be encouraged to pilot innovative approaches on a subset of beneficiaries to determine their efficacy prior to full-scale implementation.

Response: We appreciate commenters' support generally for incorporating prospective assignment into the Shared Savings Program under a new performance-based risk option, Track 3. We continue to believe that the preliminary prospective assignment methodology with retrospective reconciliation currently used under Tracks 1 and 2 of the Shared Savings Program offers strong incentives for health system redesign to impact the care for all FFS beneficiaries receiving care from ACO providers/suppliers, as indicated in a commenter's remarks. We also continue to believe that the preliminary prospective assignment methodology with retrospective reconciliation limits the potential for gaming and reduces the motivation to target beneficiaries for avoidance. While comments indicate strong support for prospective assignment, and incorporating prospective assignment across all tracks of the program, we are also convinced by comments encouraging us to allow ACOs a choice of assignment methodology. We also acknowledge there is operational complexity and administrative burden to implementing an approach under which ACOs in any track may choose either prospective or retrospective assignment, with an opportunity to switch their selection on an annual basis. Therefore, we decline at this time to implement prospective assignment in Track 1 and Track 2, and we also decline to give ACOs in Track 3 a choice of either prospective or retrospective assignment. Further, we believe implementing prospective assignment in a two-sided model track may encourage Track 1 ACOs who prefer this assignment methodology, and the other features of Track 3, to more quickly transition to performance-based risk. We note that while prospective assignment will provide an ACO with the

knowledge at the beginning of each performance year of the population for which it will be accountable, this methodology does not eliminate the issues underlying beneficiary churn in an ACO's population. Specifically, Medicare fee-for-service beneficiaries retain their freedom to seek care from the Medicare-enrolled providers and suppliers of their choosing, including providers and suppliers within and outside an ACO. As the performance year progresses, the ACO or the provider/supplier that has provided the plurality of a beneficiary's primary care services may change. In the case of ACOs participating under Track 3, these changes will not affect their prospectively assigned population for the particular performance year, but will likely influence assignment of beneficiaries in the next performance year.

FINAL ACTION: We are finalizing our proposal to codify at § 425.400(a)(3) a prospective assignment methodology that would use the stepwise assignment methodology under § 425.402 to assign beneficiaries to ACOs in Track 3. Although beneficiaries will be assigned prospectively to Track 3 ACOs, the assignment methodology itself (specified under § 425.402) will be the same as is used to assign beneficiaries to ACOs participating under Track 1 and Track 2, with the limited exceptions that are discussed in this section such as the assignment window.

(2) Exclusion Criteria for Prospectively Assigned Beneficiaries

In the December 2014 proposed rule, we noted that changes in circumstance may cause prospectively assigned beneficiaries to no longer be eligible for assignment to an ACO at the end of a performance year. We explained that it is appropriate to exclude from an ACO's prospectively assigned population beneficiaries that are no longer eligible to be assigned to an ACO. We proposed to perform a limited reconciliation where beneficiaries would only be removed from the prospective assignment list at the end of the year if they were not eligible for assignment at that time under the criteria in proposed § 425.401(b). For example, if a prospectively assigned beneficiary chose to enroll in Medicare Advantage (MA) at the beginning of the performance year, that beneficiary would be removed from the beneficiary assignment list at the end of the year and the beneficiary's expenditures would not be used in determining the ACO's financial performance for that year. We noted that under this proposal, beneficiaries would be removed from the prospective assignment list, but would not be added as they are in the retrospective reconciliation used under Tracks 1 and 2. We also explained that unlike the preliminary prospective assignment methodology with retrospective reconciliation used in Tracks 1 and 2, under this proposal, beneficiaries would not be removed from the prospective beneficiary assignment list because the beneficiary chose to receive the plurality of his or her primary care services during the performance year from practitioners other than those participating in the ACO. In other words, the ACO would be held accountable for all beneficiaries that appear on the prospective assignment list, with the narrow exception of those beneficiaries who are not eligible for assignment at the time of reconciliation based on the limited set of proposed exclusion criteria under proposed § 425.401(b). We explained that this methodology would help to mitigate concerns that ACOs may attempt to avoid caring for high risk beneficiaries that appear on their prospective beneficiary assignment list because the ACO will continue to be held accountable for the quality and cost of the care furnished to these beneficiaries even if the ACO providers/suppliers are not directly involved in their care. We also noted that this may mean that ACOs will be held accountable for beneficiaries with whom their ACO providers/suppliers have had little contact during the year. Therefore they may have limited opportunity to affect their care. We sought comment on our proposal to apply limited exclusion criteria to reconcile the prospective beneficiary assignment lists for ACOs under Track 3 at the end of the performance year.

Comment: Some commenters specifically expressed support for the proposed exclusion criteria. Many commenters offered suggestions on how to expand the proposed assignment exclusion criteria and their suggestions often included the exclusion of beneficiaries—

- Who opt out of data sharing.
- Who are cared for in long-term care (post-acute) facilities such as skilled nursing facilities or assisted living facilities.
- Who reside in the ACO's service region but receive care outside the ACO; for instance excluding beneficiaries who seek care from non-ACO providers/suppliers and in particular from distant tertiary/quaternary care facilities.
- Who move out of the ACO's service region.
- Based on the ACO's recommendation.

Some commenters specifically supported the exclusion of beneficiaries who enroll in Medicare Advantage at the beginning of the year, as indicated in the proposed exclusion criteria.

Several commenters suggested revisions to the assignment algorithm in relation to prospective assignment. A commenter suggested CMS should also adjust the assignment methodology to increase stability in the prospectively assigned population. For instance, if a beneficiary is initially assigned to an ACO in 1 year, the methodology should make it more likely for the beneficiary to be assigned to the ACO in subsequent years. Another commenter suggested that a beneficiary should remain assigned to a Track 3 ACO unless the beneficiary receives no primary care services during the performance year from an ACO professional within the Track 3 ACO whose services are considered at step 1 of the assignment methodology, and receives at least one primary care service from a primary care provider who is not an ACO professional in the Track 3 ACO whose services are considered at step1 of the assignment methodology. A commenter suggested modifying the program's assignment methodology to limit assignment to beneficiaries living in the ACO's pre-defined service area.

Commenters provided the following operational considerations related to the limited reconciliation of the Track 3 ACOs' prospective assignment lists:

- Provide ACOs with notification, during the performance period, when beneficiaries are excluded.
- Remove beneficiaries who are excluded from the ACO's quality sample for the year.

Response: We are finalizing with modification our proposal to reconcile Track 3 ACOs' preliminary assignment lists based on the limited set of proposed exclusion criteria under § 425.401(b). While we appreciate the varied suggestions for additional assignment exclusion criteria suggested by commenters, we decline to adopt commenters' suggestions because we believe adding such exclusions would dilute the request for a prospective understanding of the population assigned to the ACO, lessen the distinction between a prospective approach and our current methodology, and raise concerns regarding avoidance of at-risk beneficiaries. We did, however, explore some of the commenters' suggestions. In particular, we performed an initial analysis on the suggestion for removal of beneficiaries who move out of the ACO's service area, based on the experience of the Pioneer ACO Model, and determined there is a

very small number (on average less than 2 percent) of beneficiaries who would meet the criteria for exclusion on this basis, and would not represent a significant portion of the ACO's assignment list. We believe that continuing to include these beneficiaries on the ACO's prospective assignment list during the performance year in which the move occurs provides an opportunity for ACOs to make sure beneficiaries who move from the ACO's service area have a seamless transition in care to the new primary care provider of their choice. We intend to monitor and assess the potential impact of these additional exclusion criteria suggestions made by commenters and, if appropriate, will propose adjustments in future rulemaking.

We also decline to adopt at this time revisions to the program's assignment algorithm, as suggested by commenters, to improve ACO's retention of assigned beneficiaries from year to year or to remove certain beneficiaries based on the type of providers who furnished their care.

We appreciate commenters' support for the proposal to annually remove beneficiaries from the Track 3 ACO's prospective assignment list, based on the proposed exclusion criteria, at the end of each benchmark and performance year. We also appreciate the comments on operational issues associated with performing only an annual reconciliation of the Track 3 ACO's assignment list. We agree that there may be circumstances where we need to perform this assignment list reconciliation more frequently than annually, for instance to facilitate feedback to ACOs on their quarterly program reports (which currently include a list of excluded beneficiaries) as well as in developing ACOs' quality reporting samples. Accordingly, we are modifying our proposal to perform an annual reconciliation of the Track 3 ACO's assignment list, to exclude beneficiaries ineligible for assignment under the proposed exclusion criteria, to provide for reconciliation of the Track 3 ACO's assignment list on a quarterly basis, to coincide with the provision of quarterly reports to ACOs. In addition, consistent with the approach currently used under Tracks 1 and 2, we expect to use recently available assignment data in determining the ACO's quality reporting sample, in order for the ACO to know in advance of the quality reporting period the beneficiaries for whom it must report quality measures.

Comment: A commenter suggested that CMS allow ACOs an opportunity for a reconsideration review of their assignment list with respect to any beneficiaries the ACO believes were assigned in error.

Response: As discussed in the November 2011 final rule, certain actions specified in section 1899(g) of the Act are precluded from judicial and administrative review, including the assignment of Medicare fee-for-service beneficiaries to an ACO under subsection 1899(c) of the Act. Because beneficiary assignment under all tracks is under this authority, we are unable to offer a reconsideration review of beneficiary assignment lists.

FINAL ACTION: We are finalizing our proposed policy of excluding beneficiaries from the prospective assignment list for an ACO participating under Track 3, who meet the exclusion criteria, as specified at § 425.401(b), at the end of a performance or benchmark year. However, we are adopting a modification to this policy under which we will also perform this exclusion on a quarterly basis during each performance year, and incorporate these exclusions into quarterly reports provided to Track 3 ACOs. We have revised § 425.401(b) to reflect this change. In addition, we will use recently available assignment data when determining the ACO's quality reporting sample.

(3) Timing of Prospective Assignment

We proposed to base prospective assignment on a 12-month assignment window (off-set from the calendar year) prior to the start of the performance year. We further proposed to define an ''assignment window'' at § 425.20 as the 12-month period used to assign beneficiaries to an ACO. The assignment window for Tracks 1 and 2 would be based on a calendar year while the assignment window for Track 3 would be based on the most recent 12 months for which data are available, and which would be off-set from the calendar year. We proposed to make conforming changes to the regulations to refer to the assignment window where appropriate. We explained that this approach best balances the availability of claims data with the following operational considerations that affect the timing of when we would perform prospective assignment and make the assignment lists available to the ACOs:

- The importance of providing ACOs their assignment lists close to the start of each performance year.
- Operationally, the time needed to generate these lists.
- Aligning the timing of prospective assignment with the timing of annual acceptance of new ACOs into the program.

We also considered the option of using complete claims data for the calendar year prior to the performance year. Under this option, assignment would synchronize with the timing of the financial calculations for setting the ACO's benchmark, and would occur more than 3 months after the start of the performance year. However, under these parameters, Track 3 ACOs would not receive their prospective assignment lists until after the first quarter of each performance year. We believe that Track 3 ACOs would find such a delay in the receipt of their prospective assignment list burdensome for carrying out their health care operations, including care coordination processes and data analysis.

Comment: Commenters addressing these issues supported CMS' proposal to base prospective assignment on a 12-month assignment window (off-set from the calendar year), to balance the timely delivery of the ACO's assignment list against the availability of complete data for the calendar year prior to the start of the performance year. Some commenters expressed concern that CMS did not specify in the proposed rule the exact timeline it would use to determine prospective assignment, and urged CMS to provide this specificity in the final rule.

Several commenters explicitly stated support for the proposal to define an ''assignment window'' under § 425.20 as the 12-month period used to assign beneficiaries to an ACO.

Response: We appreciate the commenters' support of the proposal to base prospective assignment under Track 3 on a 12-month assignment window (off-set from the calendar year). In the proposed rule we provided an example of the timing of the 12 month period, which would span October through September of the prior calendar year. Specifically, to establish the assignment list for the performance year beginning January 1, 2016, we could use an assignment window from October 1, 2014 through September 30, 2015. We intentionally did not specify the precise months that would be used as part of the assignment window in the regulatory text to provide us operational flexibility in implementing assignment.

FINAL ACTION: We are finalizing our proposal regarding the timing of beneficiary assignment under Track 3, and will base prospective assignment on a 12-month assignment window (off-set from the calendar year) prior to the start of the performance year. Accordingly, we are finalizing the provision at § 425.400(a)(3) as proposed. In addition, we are finalizing our proposal, to define an ''assignment window'' at § 425.20 as

the 12-month period used to assign beneficiaries to an ACO.

(4) Interactions Between Prospective and Retrospective Assignment Models

Under the Shared Savings Program, a beneficiary may only be assigned to a single ACO for purposes of determining the ACO's financial and quality performance during a performance year. In the December 2014 proposed rule we explained that because there are markets in which there are multiple ACOs, there would likely be interactions between prospective assignment for Track 3 ACOs and preliminary prospective assignment with retrospective reconciliation for Track 1 and Track 2 ACOs. Accordingly, we proposed the following:

- A beneficiary that is prospectively assigned to a Track 3 ACO would remain assigned to the Track 3 ACO for the performance year even if the beneficiary chose to receive a plurality of his or her care outside the ACO.
- A beneficiary would remain assigned to the Track 3 ACO even if we determine as part of the retrospective reconciliation for Track 1 and Track 2 ACOs that the beneficiary actually received the plurality of his or her primary care from ACO professionals in another ACO.
- A beneficiary prospectively assigned to a Track 3 ACO would remain assigned to that ACO even if we subsequently determine the beneficiary actually received the plurality of his or her primary care from ACO professionals participating in another Track 3 ACO.

In other words, we proposed that once a beneficiary is prospectively assigned to a Track 3 ACO, the beneficiary will not be eligible for assignment to a different ACO, even if the beneficiary chose to receive a plurality of his or her primary care services from ACO professionals in that ACO during the relevant performance year.

Comment: Commenters were generally supportive of the proposal that a beneficiary prospectively assigned to a Track 3 ACO at the start of a performance year would not be eligible for assignment to a different ACO for that performance year. Several commenters suggesting additional assignment exclusion criteria (previously discussed) further suggested that some beneficiaries excluded from a prospective assignment list should become eligible for assignment to other ACOs (for example, in the case of a beneficiary who moved out of the ACO's area).

Several commenters suggested that CMS use the following hierarchy to determine the order of precedence for beneficiary assignment:

- Beneficiary choice through attestation at any time during the year.
- Prospective assignment.
- Retrospective assignment.

Commenters explained that this hierarchy creates the most stable population for the ACOs, while first honoring beneficiary choice.

Response: We appreciate commenters' suggestions on the proposal concerning interactions between prospective assignment for Track 3 ACOs and preliminary prospective assignment with retrospective reconciliation for Track 1 and Track 2 ACOs. We are finalizing, as proposed, the policy establishing that a beneficiary prospectively assigned to a Track 3 ACO will not be eligible for assignment to a different ACO, even if the beneficiary chooses to receive a plurality of his or her primary care services from ACO professionals in that ACO during the relevant performance year. Specifically a beneficiary—

- That is prospectively assigned to a Track 3 ACO would remain assigned to the Track 3 ACO for the performance year even if the beneficiary chose to receive a plurality of his or her care outside the ACO;
- Would remain assigned to the Track 3 ACO even if we determine as part of the retrospective reconciliation for Track 1 and Track 2 ACOs that the beneficiary actually received the plurality of his or her care from ACO professionals in another ACO; or
- That is prospectively assigned to a Track 3 ACO would remain assigned to that ACO even if we subsequently determine the beneficiary actually received the plurality of his or her primary care from ACO professionals participating in another Track 3 ACO.

Since we are finalizing prospective assignment exclusion criteria for Track 3 consistent with the exclusion criteria used in Tracks 1 and 2, there is no opportunity for beneficiaries removed from Track 3 ACOs' assignment lists to be eligible for assignment to Track 1 or 2 ACOs.

We also wish to clarify that this policy on interactions between the prospective and retrospective assignment models would apply to assignment for benchmark years as well as assignment for performance years. Applying the same policies to benchmark year calculations as are applied to performance year calculations will reduce the chances of introducing unwanted bias.

As discussed elsewhere in this final rule, we will be proposing the procedures for beneficiary attestation in rulemaking for the 2017 Physician Fee Schedule. However, our future considerations on how to incorporate beneficiary attestation into the Shared Savings Program will include commenters' suggestions about the need for an assignment hierarchy (accounting for attestation in relation to prospective and retrospective assignment).

FINAL ACTION: We are finalizing the policy that once a beneficiary is prospectively assigned to a Track 3 ACO for a benchmark or performance year the beneficiary will not be eligible for assignment to a different ACO, even if the beneficiary chose to receive a plurality of his or her primary care services from ACO professionals in that ACO during the relevant benchmark or performance year.

c. Determining Benchmark and Performance Year Expenditures Under Track 3

We proposed to use the same general methodology for determining benchmark and performance year expenditures under Track 3 as is currently used for Tracks 1 and 2, with the exception of certain modifications to account for the timing of beneficiary assignment under the prospective assignment methodology. Specifically, under § 425.602 we would establish the historical benchmark for all ACOs by determining the per capita Parts A and B fee-for-service expenditures for beneficiaries that would have been assigned to the ACO in any of the 3 most recent years prior to the start of the agreement period using the ACO participant TINs identified at the start of the agreement period (§ 425.602(a)). For each benchmark year that corresponds to a calendar year, this includes calculating the payment amounts included in Parts A and B fee-for-service claims using claims received within 3 months following the end of the calendar year (referred to as a ''3 month claims run out'') with a completion factor, excluding IME and DSH payments and considering individually beneficiary-identifiable payments made under a demonstration, pilot or time limited program (§ 425.602(a)(1)).

We proposed that in establishing the historical benchmark for Track 3 ACOs, we would determine the beneficiaries that would have been prospectively assigned to the ACO during each of the 3 most recent years prior to the start of the agreement period; basing benchmark year assignment on a 12-month assignment window offset from the calendar year prior to the start of each benchmark year. We also proposed to add a new regulation at § 425.610 to

address the calculation of shared savings and losses under Track 3.

We further proposed that we would still determine the Parts A and B fee-for-service expenditures for each calendar year, whether it is a benchmark year or a performance year, using a 3-month claims run out with a completion factor for the prospectively assigned beneficiaries. We would exclude IME and DSH payments and account for individually beneficiary-identifiable payments made under a demonstration, pilot or time limited program during the calendar year that corresponds to the benchmark or performance year. For example, for an ACO entering Track 3 beginning January 1, 2016, we would determine the benchmark based on CYs 2013, 2014, and 2015. We would determine a prospective list of beneficiaries using the assignment window for each year (based on an off-set 12 month period such as October 1, 2011 through September 30, 2012 for BY1). However, the claims used to determine the per capita expenditures for BY1 would be based on claims submitted during the calendar year from January 1, 2013 through December 31, 2013. The same pattern would be used to determine assignment and per capita expenditures for BY2 and BY3. We would apply the same pattern going forward to calculate per capita expenditures for the performance years.

We noted that the timing of the generation of historical benchmark reports for Track 3 ACOs would also be consistent with the current schedule for generating these reports for ACOs in Tracks 1 and 2. That is, for an ACO that begins under Track 3 in 2016, the prospective beneficiary assignment list would be available immediately at the beginning of the performance year and the historical benchmark report would be available following the 3-month claims run out, sometime after the first quarter of 2016.

Comment: Commenters supported CMS' proposal to use the calendar year to calculate benchmark and performance year expenditures for beneficiaries assigned to ACOs under Track 3, and explained advantages of this approach: (1) Aligns with the actuarial analyses that calculate the risk scores and the data inputs based on national FFS expenditures (for example, the national trend factors) and (2) allows CMS to maintain consistent timing for the generation of the historical benchmark reports across all 3 tracks.

Response: We appreciate commenters' support of the proposed policies. We are finalizing as proposed the policy of using the same general benchmarking methodology used under Tracks 1 and 2 for determining benchmark and performance year expenditures under Track 3, with certain modifications to account for the timing of beneficiary assignment under the prospective assignment methodology, as follows:

- In establishing the historical benchmark for Track 3 ACOs, determining the beneficiaries that would have been prospectively assigned to the ACO during each of the 3 most recent years prior to the start of the agreement period by basing assignment on a 12-month assignment window offset from the calendar year prior to the start of each benchmark year.
- Determining the Parts A and B fee-for-service expenditures for prospectively assigned beneficiaries each calendar year, whether it is a benchmark year or a performance year; using a 3-month claims run out with a completion factor; excluding IME and DSH payments, and considering individually beneficiary-identifiable payments made under a demonstration, pilot or time limited program.

FINAL ACTION: We are finalizing our proposal for calculating the historical benchmarks for Track 3 ACOs in accordance with § 425.602, by determining benchmark year expenditures for Track 3 ACOs using the calendar year expenditures for prospectively assigned beneficiaries, allowing for a 3-month claims run out, excluding IME and DSH payments and considering individually beneficiary-identifiable payments made under a demonstration, pilot or time limited program. We are also finalizing our proposal to add a new regulation at § 425.610 to address the calculation of shared savings and losses under Track 3, including use of a 3-month claims run out with a completion factor to calculate an ACO's per capita expenditures for each performance year, excluding IME and DSH payments and considering individually beneficiary-identifiable payments made under a demonstration, pilot or time limited program.

d. Risk Adjusting the Updated Benchmark for Track 3 ACOs

Currently, under Track 1 and Track 2, the risk adjustment methodology differentiates between newly and continuously assigned beneficiaries, as defined under § 425.20. A newly assigned beneficiary is a beneficiary assigned in the current performance year that was neither assigned to nor received a primary care service from any of the ACO participants during the most recent prior calendar year. A continuously assigned beneficiary is a beneficiary assigned to the ACO in the current performance year that was either assigned to or received a primary care service from any of the ACO participants during the most recent prior calendar year. As specified under §§ 425.604(a), and 425.606(a), we use updated CMS–HCC prospective risk scores to account for changes in severity and case mix for newly-assigned beneficiaries. We use demographic factors to adjust for these changes in severity and case mix for continuously assigned beneficiaries. However, if the CMS–HCC prospective risk scores for the continuously assigned population show a decline, we use the lower risk score to adjust for changes in severity and case mix for this population.

In the December 2014 proposed rule we explained that, as expressed in the November 2011 final rule (76 FR 67918), this approach to risk adjustment strikes a fair balance between accounting for changes in the health status of an ACO's population while not encouraging changes in coding practices for care provided to beneficiaries who remain continuously assigned to the ACO or avoidance of high risk beneficiaries. We stated that we believe that the existing risk adjustment methodology has been effective in achieving this balance under Tracks 1 and 2, which use a retrospective assignment methodology for purposes of financial reconciliation, and that it would be appropriate to apply a similar approach to risk adjusting the updated benchmark for Track 3 ACOs, even though we proposed a prospective beneficiary assignment methodology. As in the existing tracks, it is important to ensure that ACOs participating under Track 3 are not encouraged to modify their coding practices in order to increase the likelihood of earning shared savings; rather, shared savings should result from actual reductions in Medicare expenditures for assigned beneficiaries.

Therefore, we proposed to apply the same general risk adjustment methodology in Track 3, but to make certain refinements to our definitions of newly and continuously assigned beneficiaries at § 425.20 to be consistent with our proposed prospective assignment approach for Track 3. Specifically, we proposed to replace the reference to ''most recent prior calendar year'' with a reference to ''the assignment window for the most recent prior benchmark or performance year.'' Thus, for Track 3 the reference period for determining whether a beneficiary is newly or continuously assigned will be most recent prior prospective assignment window (the 12 months off set from the calendar year) before the assignment window for the current performance year. The reference period

for determining whether under Track 1 or 2 a beneficiary is newly or continuously assigned will continue to be the most recent prior assignment window (the most recent calendar year). Our proposed risk adjustment methodology for Track 3 was reflected in the proposed new regulation at § 425.610(a).

Comment: Commenters expressed their support for this proposal. However, commenters expressed concerns generally about the program's risk adjustment methodology.

Response: We appreciate commenters' support for the proposal to use the risk adjustment methodology established under Tracks 1 and 2 for updating the historical benchmark for Track 3 ACOs with refinements to the definitions of newly and continuously assigned beneficiaries to be consistent with the prospective assignment approach proposed for Track 3. In section II.F.5 of this final rule, we discuss in greater detail our response to concerns expressed by commenters about the program's existing risk adjustment methodology.

FINAL ACTION: We are finalizing our proposed risk adjustment methodology for updating the historical benchmark for Track 3 ACOs under § 425.610(a). We are also finalizing our proposal to modify the definitions of newly and continuously assigned beneficiaries at § 425.20 to ensure they are consistent with prospective assignment under Track 3 and remain relevant to preliminary prospective assignment with retrospective reconciliation under Tracks 1 and 2.

e. Final Sharing/Loss Rate and Performance Payment/Loss Recoupment Limit Under Track 3

Currently, an ACO that meets all the requirements for receiving shared savings payments under the one-sided (Track 1) model can qualify to receive a shared savings payment of up to 50 percent of all savings under its updated benchmark, not to exceed 10 percent of its updated benchmark, as determined on the basis of its quality performance. Likewise, a Track 2 ACO can potentially receive a shared savings payment of up to 60 percent of all savings under its updated benchmark, not to exceed 15 percent of its updated benchmark. The higher sharing rate and performance payment limit under Track 2 were established as incentives for ACOs to accept greater financial risk for their assigned beneficiaries in exchange for potentially higher financial rewards. Additionally, a Track 2 ACO is accountable for between 40 to 60 percent of all losses above its updated benchmark, depending on the ACO's quality performance. The amount of shared losses for which an ACO is liable, however, may not exceed 5 percent of its updated benchmark in the first performance year, 7.5 percent in the second performance year, and 10 percent in the third performance year and any subsequent performance year (§ 425.606(g)). In the November 2011 final rule (76 FR 67937), we stated that we believe these progressively higher caps on losses ''achieve an appropriate balance between providing ACOs with security about the limit of their accountability for losses while encouraging ACOs to take increasing responsibility for their costs and protecting the Medicare Trust Funds.'' In the December 2014 proposed rule, we noted that under one of the payment arrangements available under the Pioneer ACO Model, a Pioneer ACO can qualify to receive up to 75 percent of shared savings, not to exceed 15 percent of its benchmark. Under this payment arrangement, Pioneer ACOs may also be responsible for shared losses of up to 15 percent of their benchmark.

In the December 2014 proposed rule, we considered options for increasing ACO participation in a performance-based risk track by improving the attractiveness of the final sharing rate and performance payment limit in a risk model. We explained that it is important to reward ACOs with a greater level of savings for taking on greater levels of risk. Further, we noted that it is important to draw a distinction between the sharing rates available under Track 2 and the proposed Track 3.

We discussed several options for increasing potential shared savings while also increasing risk for Track 3 ACOs as follows:

- Retaining the symmetry between the shared savings and shared losses methodologies under Track 3, such that an ACO with very high quality performance would not be allowed to lower its share of losses below 25 percent of losses, the equivalent of 1 minus the maximum sharing rate of 75 percent, while being eligible for a sharing rate of up to 75 percent.
- Holding Track 3 ACOs responsible for the maximum percentage of losses, that is, 75 percent, while allowing quality performance to protect them only to the same extent it protects Track 2 ACOs, such that ACOs with very high quality scores would limit their percentage of losses to 40 percent.
- Applying the same minimum and maximum shared loss rates used under Track 2: That is, the range of 40 percent to 60 percent, depending on quality performance, but the maximum shared savings rate would be increased to 75 percent in order to encourage participation in a model with increased risk.

After considering these options, we proposed, and sought comment on, the following policies under Track 3 (specified under § 425.610):

- Shared savings rate of up to 75 percent in conjunction with accepting risk for up to 75 percent of all losses, depending on quality performance similar to Track 2 ACOs. Track 3 ACOs with high quality performance would not be permitted to reduce the percentage of shared losses below 40 percent.
- Performance payment limit not to exceed 20 percent of the Track 3 ACO's updated benchmark, and a loss recoupment limit of 15 percent of the Track 3 ACO's updated benchmark. We also sought comment on whether a shared loss rate of 40 percent was high enough to protect the Trust Funds or whether it should be increased, for example, to 50 percent or 60 percent. We also sought comment on whether our proposal to establish a range of 40 percent to 75 percent for shared losses should, in turn, impact the amount of shared savings available to Track 3 ACOs. For example, should we permit Track 3 ACOs to earn a parallel range of 40 percent to 75 percent of shared savings. In other words, once the ACO has met criteria for sharing in savings, the minimum guaranteed amount of shared savings would be 40 percent with a maximum of 75 percent.

We requested comment on the appropriate minimum percentage of shared losses under Track 3. We also sought comment on the appropriate percentage for the performance payment limit and loss recoupment limit and whether there are reasons to set these at 15 percent and 10 percent of the updated benchmark respectively, rather than our proposal of 20 percent and 15 percent respectively.

Finally, we proposed to make certain technical, conforming changes to § 425.606, which governs the calculation of shared savings and losses under Track 2, to reflect our proposal to incorporate a second two-sided risk model into the Shared Savings Program. We sought comments on these proposed changes and on any other technical changes to our regulations that may be necessary in order to reflect the proposal to add a new Track 3.

Comment: Several commenters expressed support generally for the proposal to ''widen the performance payment and loss sharing limits'' under Track 3 as compared to Track 2, specifically the proposal to offer Track

3 ACOs the potential to realize more savings, but also more losses compared to Track 2. Some commenters agreed with the mix of risk and reward offered to Track 3 ACOs under the proposed policies, while other commenters expressed support for some aspects of the proposed policies (typically favoring higher reward and lower risk), while others suggested a number of alternatives.

Nearly all commenters were supportive of increasing the sharing rate and performance payment limit under Track 3 and establishing a maximum loss rate of 75 percent and a minimum loss rate of 40 percent, stating this would differentiate Track 3 from Track 2 for ACOs willing to take on more risk for greater reward. Some commenters recommended increasing the sharing rate, for example, to 85 percent, and some commenters suggested lowering the maximum and minimum loss rates (for example, to max 40 percent and min 10 percent, respectively). A commenter requested clarification and the opportunity to review and comment on the quality performance required to reduce the shared loss requirement from 75 percent to 40 percent.

Several commenters favored alternatives to the proposed policies that would reduce the total losses Track 3 ACOs would be liable for as follows:

- Track 3 loss sharing should match Track 2. A commenter generally supported holding Track 3 ACOs to the same level of downside risk as Track 2 (rather than less) even with high quality performance.
- Lower the loss sharing rate maximum, for example to 40 percent. Commenters explained that paying 40 percent of losses is a sufficient deterrent to incentivize providers to avoid losses if at all possible. Setting the percentage higher could deter participation in two-sided risk models.
- Lowering the loss sharing rate minimum, for example to 10 percent. Commenters suggested that the loss sharing rate under Track 3 be reduced to a minimum of 10 percent based on quality performance to encourage continued investment in quality improvements, which should yield longer term cost savings.

Some commenters specifically supported the proposed performance payment limit (20 percent) and loss cap (15 percent). A few commenters suggested alternatives to the sharing and loss caps, suggesting a lower loss cap (for example, 10 percent), or phasing-in loss caps for Track 1 ACOs moving to Track 3 with progressively higher caps year to year, or using symmetrical caps on savings and losses consistent with those used in commercial ACO financial models.

While it was not uncommon for commenters to acknowledge the current low participation in the two-sided model, a commenter cautioned CMS about the unattractiveness of the downside of Track 3 given the lack of participation in Track 2 with its shared loss rate of up to 60 percent and loss limit of 5 percent in year 1, 7.5 percent in year 2 and 10 percent in year 3. When compared with the level of risk required under Track 2, the commenter expressed concerns that the proposal to hold Track 3 ACOs accountable for a shared loss rate of up to 75 percent with a loss-recoupment limit of 15 percent would be counterproductive.

Response: We appreciate commenters' support for the proposed policies related to the final sharing and loss rates and performance payment and loss sharing limitations for Track 3, and are finalizing these features of Track 3 as proposed. We continue to believe that the proposed policies strike the appropriate balance between risk and reward under this new two-sided model Track. We believe that the opportunity for greater shared savings as compared to Track 2 will encourage ACOs to enter performance-based risk, as well as give an opportunity for greater reward for ACOs more experienced with population management who are achieving the program's goals. Further, offering greater risk and reward under Track 3 as compared to Track 2 creates another step towards progressively higher risk, which we believe is responsive to commenters' requests for additional program options. We continue to believe it is important to hold ACOs accountable for greater risk in exchange for the opportunity to earn a greater reward, particularly considering that we believe ACOs who bear financial risk hold the potential to induce more meaningful systematic change. For these reasons, we disagree with the suggestions to lower the maximum loss sharing rates and the loss limits for Track 3 to match, or to be lower than, those currently offered under Track 2.

As commenters pointed out, participation in the two-sided model has been low. We believe the features of the financial model under Track 3, as well as opportunities for prospective assignment and additional programmatic and regulatory flexibility for Track 3 ACOs will attract ACOs to enter this model.

FINAL ACTION: We are finalizing the following modifications in order to implement a new two-sided risk option, Track 3 under § 425.610:

- Applying a shared savings rate of up to 75 percent in conjunction with accepting risk for up to 75 percent of all losses, depending on quality performance similar to Track 2 ACOs. Track 3 ACOs with high quality performance would not be permitted to reduce the percentage of shared losses below 40 percent.
- Applying a performance payment limit such that shared savings do not exceed 20 percent of the Track 3 ACO's updated benchmark, and a loss recoupment limit of 15 percent of the Track 3 ACO's updated benchmark.

We did not receive any comments on the technical, conforming changes to § 425.606 to reflect our proposal to incorporate a second two-sided risk model into the Shared Savings Program, and we are finalizing these changes as proposed.

f. Minimum Savings Rate and Minimum Loss Rate in Track 3

We proposed to apply the same fixed MSR and MLR of 2 percent under Track 3, as was originally established for Track 2 under the November 2011 final rule. This proposal was reflected in paragraph (b) of the proposed new regulation at § 425.610. As described in the December 2014 proposed rule, we also considered other options for establishing the MSR and MLR for Track 3 ACOs, including an option that would remove the MSR and MLR entirely. Under this option, ACOs would be subject to normal variation around their benchmark so that they would be held responsible for all losses when performance year expenditures are above the benchmark in addition to sharing in any savings if performance year expenditures fall below the benchmark. Another option could be to set both the MSR and MLR at 1 percent instead of 2 percent. This would serve to increase both risk of sharing losses and savings, but not as much as doing away with the MSR and MLR entirely. We specifically sought comment on whether it would be desirable to remove the MSR and MLR entirely under Track 3 as well as alternative levels at which to set the MSR and MLR for ACOs participating under Track 3. We noted that we would consider comments received regarding these alternatives in determining the final MSR and MLR that would apply under Track 3.

Comment: Several commenters expressed support for our proposals to apply a fixed 2 percent MSR/MLR to Track 3 ACOs, favoring an alternative that would differentiate Track 3 from Track 2 (where we proposed to revise the MSR/MLR to vary based upon the size of the ACO's population) and

provide a greater opportunity to share savings for Track 3 ACOs. Some commenters offered alternatives such as permitting ACOs to choose a MSR/MLR that varies by number of assigned beneficiaries, choose their own MSR/MLR, use a flat 1 percent MSR/MLR, or eliminate it altogether. We consider the comments received in response to the proposed modification of the MSR/MLR for Track 2 to be relevant to our proposal and the options we sought comment on for setting the MSR/MLR for Track 3. (See related discussion in section F.2.c of this final rule.)

Response: As we previously explained in our response to the comments on our proposed revisions to the MSR/MLR for Track 2, we are persuaded by commenters' statements that ACOs are best positioned to determine the level of risk they are prepared to accept. We are finalizing the same MSR/MLR methodology for ACOs in both Track 2 and 3. Under this methodology, ACOs may select a symmetrical MSR/MLR to apply throughout the course of their agreement period from a set of options. We believe that applying this same flexibility in symmetrical MSR/MLR selection across Tracks 2 and 3 is appropriate, and would allow ACOs to have the opportunity to select the risk track to best suit their preferences and their readiness to accept performance-based risk. We believe commenters supportive of the proposed policy would find this policy acceptable, as Track 3 ACOs would have the opportunity to choose a flat 2 percent MSR/MLR (as was proposed). Furthermore, we believe this approach is responsive to commenters' requests for greater flexibility on the thresholds ACOs must meet to be eligible to share in savings or be accountable for sharing in losses under Track 3.

Under this policy, Track 3 ACOs would have the opportunity to select a symmetrical MSR/MLR prior to the start of their agreement period, as part their initial program application or agreement renewal application. No modifications to this selection would be permitted during the course of this agreement period.

FINAL ACTION: We are finalizing a MSR/MLR methodology for Track 3 under § 425.610(b) that will allow ACOs to choose among several options for establishing their symmetrical MSR/MLR: (1) 0 percent MSR/MLR; (2) symmetrical MSR/MLR in a 0.5 percent increment between 0.5–2.0 percent; and (3) symmetrical MSR/MLR that varies based on the ACO's number of assigned beneficiaries according to the methodology established under the one-sided model. Under the third option, the MSR for an ACO under Track 3 would be the same as the MSR that would apply in the one-sided model under § 425.604(b) and is based on the number of beneficiaries assigned to the ACO. The MLR under Track 3 must be equal to the negative MSR. We are also finalizing a requirement that ACOs must select their MSR/MLR prior to the start of each agreement period in which they participate under Track 3 and this selection may not be changed during the course of the agreement period.

Additionally, we are making conforming changes to § 425.100 to account for the addition of Track 3. Section 425.100(c) currently refers to the application of the minimum loss rate to ACOs that operate under the two-sided model. In the December 2014 proposed rule, we proposed to make a conforming change to § 425.100(c) to add references to the two-sided models under Tracks 2 and 3. In this conforming change, we inadvertently included a reference to the one-sided model (§ 425.604). Accordingly, in this final rule, we are modifying the conforming change to eliminate the reference to the one-sided model because ACOs under this model are not accountable for shared losses.

g. Monitoring for Gaming and Avoidance of At-Risk Beneficiaries

In the December 2014 proposed rule we explained that while we have concerns that prospective assignment may inadvertently increase incentives for gaming and avoidance of at-risk beneficiaries, we have taken steps to minimize these incentives by retaining other Shared Savings Program policies and procedures such as risk-adjusting expenditures and monitoring ACOs to ensure they are not engaging in gaming or avoidance of at-risk beneficiaries. We explained further that our proposal to exclude only those beneficiaries that no longer meet the eligibility criteria for assignment to an ACO should reduce the probability that attempts by the ACO to ''cherry pick'' or avoid at-risk beneficiaries during the performance year would succeed. Therefore, the concerns associated with a prospective assignment methodology would be balanced by the potential that establishing a new Track 3 has to encourage ACOs to accept greater responsibility and financial risk for the care provided to their patients in return for the possibility of achieving greater rewards. We sought comment on ways to mitigate concerns regarding gaming and avoidance of at-risk beneficiaries under a prospective assignment methodology, whether implementing a prospective approach to assignment would dilute the program goals of delivery system redesign, and whether there are additional programmatic considerations that should be taken into account as a result of our proposal to apply a prospective assignment methodology in Track 3.

Comment: Several commenters expressed general concerns about the effect of ACOs undertaking increased financial risk and prospective assignment on beneficiaries' freedom of choice of providers and, more generally, on access to care. In particular, commenters expressed concerns that ACOs that transition to risk-based models have incentives to curtail access to care provided in certain settings or by certain providers, specifically post-acute and rehabilitation care and care by specialty and sub-specialty providers. Some commenters explained that performance-based risk could increase the likelihood for care stinting and beneficiary steering. A commenter explained that prospective assignment may tempt ACOs to treat their assigned beneficiary populations as if they are enrolled managed care populations and apply more aggressive care management strategies that limit patient choice. A commenter generally suggested that ACOs have already implemented more aggressive and somewhat questionable practices that require patient referrals to remain within ACOs.

Several commenters explained their concerns were heightened in certain circumstances, such as situations in which ACOs do not include a broad range of specialists, and, as a result, patients may not have access to appropriate specialty care for their clinical needs. Concerns were also raised regarding the program's existing quality measurement and risk adjustment methodology. Several commenters indicated that the program's existing quality measures are not sufficient to assure appropriate levels of care even under existing levels of risk. Another commenter specified that the Clinician and Group CAHPS for ACOs survey used to assess ACO quality performance is not sufficient to demonstrate whether beneficiaries are being referred for specialty care at the most clinically appropriate point in their disease progression. A commenter suggested that avoidance behavior around high-risk beneficiaries could be eliminated by including robust risk adjustment that incorporates all of beneficiaries' health related characteristics (clinical complexities), as well as relevant socioeconomic and socio-demographic factors.

Some commenters provided the following suggestions on how to protect against care stinting, beneficiary steering and avoidance of at-risk beneficiaries by ACOs under prospective assignment:

- Examine the referral patterns of ACOs.
- Establish benchmarks that will foster an appropriate level of access to and care coordination with specialty medicine providers, particularly for beneficiaries with chronic health conditions.
- Require ACOs to include in their applications a summary of specialists included in their networks and the methodology used to determine that the number of specialists is sufficient to provide access to the assigned beneficiary population.
- Require ACOs to include specialists on committees responsible for developing and implementing care pathways for the ACO's assigned Medicare population.
- Develop formalized guidance for ACOs outlining the types of behaviors that are and are not allowed with regard to a prospectively assigned patient population.
- Closely monitor whether ACOs are limiting beneficiary freedom of choice in light of prospective assignment or discouraging high-cost or at-risk beneficiaries from seeking care at the ACO in order to avoid assignment of these beneficiaries to the ACO.
- Monitor for a combination of factors, such as quality performance, ACO Participant List changes, and utilization trends.
- Ensure beneficiaries understand their right to seek care from providers of their choice.

Response: As we discussed in the December 2014 proposed rule, we believe that ACOs will have strong incentives to provide their prospectively assigned beneficiaries high-quality, low-cost care in order to discourage them from seeking care outside the ACO and that beneficiaries that are prospectively assigned to an ACO will continue to be protected from concerns related to inappropriate limitations on care under traditional FFS Medicare because of their ability to choose their providers. Unlike managed care programs, there is no lock-in for beneficiaries under the Shared Savings Program. Beneficiaries assigned to Shared Savings Program ACOs retain their freedom to choose their healthcare providers and suppliers. Therefore, we believe a prospective assignment methodology under the Shared Savings Program presents limited risks to FFS beneficiaries.

We appreciate the commenters' sharing their concerns and recommendations on this issue. We agree that monitoring is necessary to ensure providers do not stint on care or avoid at-risk beneficiaries, and we currently monitor ACOs for these circumstances as specified under § 425.316(b). Our policies on monitoring and termination will help to ensure that ACOs who underperform on the quality standards do not continue in the program. Further, we continue to believe the program's quality performance standard is rigorous and the quality measures are diverse and appropriate, spanning ACO-reported measures, claims-based and administrative measures and patient/caregiver experience of care measures. We will monitor closely the implementation of prospective assignment and the effect of performance-based risk on ACOs, and if we identify concerns, we may revise our policies in these areas in future rulemaking.

4. Modifications to Repayment Mechanism Requirements

a. Overview

In the November 2011 final rule (76 FR 67937), we discussed the importance of a program requirement that ensures ACOs entering the two-sided model will be capable of repaying Medicare for shared losses. The final rule established a requirement that ACOs applying to participate in the two-sided model must establish a repayment mechanism to assure CMS that they can repay losses for which they may be liable (§ 425.204(f)). For an ACO's first performance year, the repayment mechanism must be equal to at least 1 percent of its total per capita Medicare Parts A and B FFS expenditures for its assigned beneficiaries, as determined based on expenditures used to establish the ACO's benchmark (§ 425.204(f)).

Further, to continue participation in the program, each Track 2 ACO must annually demonstrate the adequacy of its repayment mechanism before the start of each performance year in which it takes risk (§ 425.204(f)(3)). The repayment mechanism for each performance year must be equal to at least 1 percent of the ACO's total per capita Medicare Parts A and B FFS expenditures for its assigned beneficiaries, as determined based on expenditures for the ACO's most recent performance year.

An ACO may demonstrate its ability to repay losses, or other monies determined to be owed upon first year reconciliation, by obtaining reinsurance, placing funds in escrow, obtaining surety bonds, establishing a line of credit (as evidenced by a letter of credit that the Medicare program can draw upon), or establishing another appropriate repayment mechanism that will ensure its ability to repay the Medicare program (§ 425.204(f)(2)). Given our experience in implementing the program, we proposed to revisit our requirements to simplify them and to address stakeholder concerns regarding the transition to risk, as discussed in the previous sections.

b. Amount and Duration of the Repayment Mechanism

In the proposed rule, we discussed that the practical impact of the current rule is to require ACOs to create and maintain two separate repayment mechanisms for 2 consecutive performance years, which effectively doubles the amount of the repayment mechanism during the overlapping time period between the start of a new performance year and settlement of the previous performance year. We heard from stakeholders that establishing multiple repayment mechanisms during the agreement period can be very burdensome and ties up capital that could otherwise be used to support ACO operations. Therefore, we considered whether it would be possible to streamline the repayment mechanism requirements. Specifically, we considered whether it would be feasible for an organization to establish a single repayment mechanism to cover the entire 3-year agreement period. Initially, we were concerned that requiring an organization to establish a single repayment mechanism to cover 3 performance years would involve excessive and overly burdensome repayment amounts. However, our actuaries determined that this may not be the case. Instead, we found that the repayment mechanism that is established for the first performance year of an agreement period under a two-sided risk model could be rolled over for subsequent performance years. In other words, we could create a mechanism for ACOs to demonstrate their ability to repay losses by establishing one repayment mechanism for the entire 3-year agreement period.

Thus, we proposed to require an ACO to establish a repayment mechanism once at the beginning of a 3-year agreement period. We additionally proposed to require an ACO to demonstrate that it would be able to repay shared losses incurred at any time within the agreement period, that is, upon each performance- year reconciliation and for a reasonable

period of time after the end of each agreement period (the ''tail period''). Under our proposal, the tail period provides time for CMS to calculate the amount of any shared losses the ACO may owe and to collect this amount from the ACO. We proposed to establish the length of the tail period in guidance.

We proposed that an ACO must demonstrate the adequacy of its repayment mechanism and maintain the ability to repay 1 percent of the ACO's total per capita Medicare Parts A and B FFS expenditures for its assigned beneficiaries based on the expenditures used to establish the benchmark for the applicable agreement period, as estimated by CMS at the time of application or participation agreement renewal. If the ACO uses any portion of the repayment mechanism to repay any shared losses owed to CMS, the ACO must promptly replenish the amount of funds available through the repayment mechanism within 60 days. This would ensure continued availability of funds to cover any shared losses generated in subsequent performance years. Given that we also proposed, as discussed in section II.B. of this final rule, to adjust an ACO's benchmark annually to account for changes in the ACO participant list, it is possible that an ACO's benchmark could change such that the repayment mechanism amount established at the beginning of the 3-year agreement period no longer represents 1 percent of the ACO's benchmark expenditures. Therefore, we noted in our proposal that we were considering whether to require the ACO to adjust the repayment mechanism to account for this change, or whether we should establish a threshold that triggers a requirement for the ACO to add to its repayment mechanism. We sought comment on this issue, including the appropriate threshold that should trigger a requirement that the ACO increase the amount guaranteed by the repayment mechanism.

We proposed to modify § 425.204(f) to reflect these changes. We noted that the reference to ''other monies determined to be owed'' in the current provision relates to the interim payments that were available in the first performance year only for ACOs that started participating in the program in 2012. Because we no longer offer interim payments to ACOs, we also proposed to remove from § 425.204(f) the reference to ''other monies determined to be owed.''

Comment: We received several comments on our proposal to require an ACO to establish a repayment mechanism once at the beginning of the agreement period instead of annually. Most commenters expressed support for this change because they believe it would reduce burden on the ACO. Few commenters opposed the change, but the ones that did stated that it may be more difficult or more expensive for an ACO to obtain a repayment mechanism that covers 3-performance years as opposed to one; for example, a commenter explained that the duration and size of a surety bond may affect whether an ACO can obtain a surety bond. As the duration of the bonded obligation becomes longer, the surety must predict the strength of the principal's operation for periods of time further into the future, and this in turn increases the surety's risk, resulting in tightened underwriting standards.

A commenter pointed out that there is nothing currently in the program rules to prohibit an ACO from replacing one repayment mechanism with another and suggested that CMS establish a policy to give ACOs flexibility to switch from one type of approved repayment mechanism to another. This same commenter believes such flexibility would enable the ACO to pursue its best option at any given time without jeopardizing CMS' possession of a sound repayment mechanism.

Response: We appreciate these comments and agree with commenters that requiring an ACO to establish a repayment mechanism once at the beginning of an agreement period instead of annually could relieve burden from ACOs that choose to participate under a two-sided model. Thus, we anticipate that the proposed policy would be less burdensome than the current policy. Specifically, under the existing rule, a two-sided model ACO must concurrently maintain multiple repayment mechanism arrangements. For instance, an ACO must retain the repayment mechanism established for the preceding performance year while CMS determines the ACO's shared savings or losses for that prior performance year while also maintaining a separate repayment mechanism for the current performance year. Based on our experience with repayment mechanisms, we believe ACOs will be able to work with financial institutions to establish the required arrangement to cover the full agreement period and tail period. However, we will monitor the use of repayment mechanisms and may revisit the issue in future rulemaking if we determine that the ability of an ACO to establish an adequate repayment mechanism for the entire agreement period and an appropriate tail period is constrained by the availability or cost of repayment mechanism options. Furthermore, we agree that nothing in our program rules currently prohibits an ACO from changing from one acceptable repayment mechanism to another during the agreement period. Indeed, we worked with an ACO who transitioned from a letter of credit to an escrow account, and we anticipate changes where an ACO replaces a repayment mechanism with another acceptable repayment mechanism are likely to occur in the future. However, we note that these changes can be costly and require significant coordination between CMS, the ACO, and financial institutions to ensure the ACO remains in compliance with the program's repayment mechanism requirements at all times during the transition. Therefore, we encourage ACOs to establish and maintain one repayment mechanism for the entire 3-year agreement period and tail period.

Comment: A few commenters provided feedback regarding the proposal to require ACOs to maintain a repayment mechanism sufficient to repay 1 percent of the ACO's total per capita Medicare Parts A and B FFS expenditures for its assigned beneficiaries based on the expenditures used to establish the benchmark for the applicable agreement period, as estimated by CMS at the time of application or participation agreement renewal. These few commenters found the proposed amount acceptable. A few commenters responded to CMS' request for comment on whether a threshold should be established that triggers a requirement for the ACO to add to its repayment mechanism. Several commenters stated that such a trigger should apply, but only when the amount of the required payment mechanism would decline. In other words, the repayment mechanism should be revised only if the ACO's benchmark declines. A commenter suggested that CMS conduct analyses on the magnitude of year-to-year changes in benchmarks prior to setting a threshold amount or trigger. This commenter explained it did not expect it to be common for an ACO to make changes to its ACO participant list significant enough so that the 1 percent initially estimated is no longer sufficient. Several commenters recommended specific triggers for revisions to the amount of the repayment mechanism such as changes in the ACO's benchmark of 10 or 15 percent or more, or changes to the ACO participant list.

Response: We appreciate these comments and decline at this time to establish a trigger or threshold that would require an ACO to add to (or remove from) its repayment mechanism

in the event the ACO's benchmark changes significantly during the course of the agreement period. We agree with commenters that CMS should conduct the suggested additional analyses prior to implementing such a policy. We may revisit this issue in future rulemaking after we gain more experience with ACOs under a two-sided model.

Comment: Several commenters provided comment on the proposal that the ACO must promptly replenish the amount of funds available through the repayment mechanism within 60 days. Most commenters opposed the proposal stating that 60 days may not be enough to raise the necessary replenishment funds, particularly in ACOs that had accrued substantial losses. Instead, these commenters suggested permitting the ACO 90 days to replenish the repayment mechanism. A commenter found 60 days a reasonable period of time for replenishment. Other commenters expressed concern that ACOs that have used their repayment mechanisms may not be in a financial position to replenish the amount at all. These commenters suggested that requiring replenishment was unusual, particularly in the case of surety bonds, and recommended that CMS carefully consider whether such a policy would be necessary.

Response: We appreciate the comments regarding replenishment of repayment mechanism funds when they are used during the agreement period. We believe it is important for an ACO that uses a repayment mechanism for shared losses to replenish the arrangement so that the ACO continues to demonstrate its ability to repay any future losses during the agreement period. We disagree that requiring replenishment is particularly unusual, but we agree that some ACOs may require additional time to replenish funds. Specifically, we believe that ACOs who have used their existing repayment mechanism arrangement to repay shared losses might need additional time to gather the resources needed to replenish their repayment mechanism arrangement. Therefore, we are revising our proposal. Instead of requiring ACOs to replenish funds within 60 days, we will allow up to 90 days for replenishment. However, we will monitor the replenishment process and may revisit the issue in future rulemaking if we believe this policy inhibits ACO participation in the Shared Savings Program or undermines ACOs' ability to repay shared losses.

FINAL ACTION: We are finalizing our proposal to require an ACO that enters a two-sided model to establish a repayment mechanism once at the beginning of a 3-year agreement period. We recognize there are a few ACOs under existing participation agreements in Track 2 that have established repayment mechanisms for the 2014 and 2015 performance years (the final 2 years of the ACO's' first' agreement period). We note that the repayment mechanisms established by these ACOs are types of repayment mechanisms that we are retaining under this final rule. Accordingly, we expect these ACOs to maintain their existing repayment mechanisms in accordance with the terms set forth in the repayment mechanisms. Should these ACOs choose to renew their participation agreements for a second agreement period beginning January 1, 2016, they will only need to establish a repayment mechanism once at the beginning of their new 3-year agreement period. For purposes of this final rule, we will treat the existing repayment mechanisms established by these ACOs for the 2014 and 2015 performance years as satisfying the requirement that the ACO establish a repayment mechanism that is sufficient to repay any shared losses it may incur in the current agreement period and will apply the revisions to the requirements under section § 425.204(f) accordingly.

Under the new requirements we are finalizing in this rule, ACOs must demonstrate that they would be able to repay shared losses incurred at any time within the agreement period, and for a reasonable period of time after the end of each agreement period (the ''tail period''). The tail period shall be sufficient to permit CMS to calculate the amount of any shared losses that may be owed by the ACO and to collect this amount from the ACO. We will establish the length of the tail period in guidance. Additionally, we are finalizing our proposal that an ACO must demonstrate the adequacy of its repayment mechanism and maintain the ability to repay 1 percent of the ACO's total per capita Medicare Parts A and B FFS expenditures for its assigned beneficiaries based on the expenditures used to establish the benchmark for the applicable agreement period, as estimated by CMS at the time of application or participation agreement renewal. We decline at this time to adopt a policy to establish a trigger or threshold that would require an ACO to increase the value of its repayment mechanism in the event of changes to the ACO's benchmark during the agreement period.

We are modifying our proposal regarding the timing of the replenishment of the amount of funds available through the repayment mechanism. Based on comments, we are finalizing the requirement that if an ACO uses its repayment mechanism to repay any portion of shared losses owed to CMS, the ACO must promptly replenish the amount of funds required to be available through the repayment mechanism within 90 days.

Finally, we are finalizing our proposal to modify § 425.204(f) to reflect these changes, and to remove the reference to ''other monies determined to be owed'' from § 425.204(f).

c. Permissible Repayment Mechanisms

Under our current rules, ACOs may demonstrate their ability to repay shared losses by obtaining reinsurance, placing funds in escrow, obtaining surety bonds, establishing a line of credit (as evidenced by a letter of credit that the Medicare program can draw upon), or establishing another appropriate repayment mechanism that will ensure their ability to repay the Medicare program. Based on our experience with the program, we proposed to remove the option that permits ACOs to demonstrate their ability to pay using reinsurance or an alternative mechanism. First, in the proposed rule we explained that no Shared Savings Program ACOs had obtained reinsurance to establish their repayment mechanism. We noted that ACOs that explored this option had told us that it is difficult to obtain reinsurance, in part, because of insurers' lack of experience with the Shared Savings Program and the ACO model, and because Shared Savings Program ACOs take on performance-based risk rather than insurance risk. Additionally, the terms of reinsurance policies could vary greatly and prove difficult for CMS to effectively evaluate. Second, we explained that based on our experience to date, a request to use an alternative repayment mechanism increases administrative complexity for both ACOs and CMS during the application process and is more likely to be rejected by CMS than one of the specified repayment mechanisms.

Therefore, we proposed to revise § 425.204(f)(2) to limit the types of repayment mechanisms ACOs may use to demonstrate their ability to repay shared losses to the following: Placing funds in escrow; establishing a line of credit; or obtaining a surety bond. Under this proposed revision, ACOs would retain the flexibility to choose a repayment mechanism that best suits their organization. We stated that we would be more readily able to evaluate the adequacy of these three types of arrangements, as compared to reinsurance policies and other alternative repayment mechanisms. For

instance, escrow account agreements, letters of credit, and surety bonds typically have standard terms that CMS can more readily assess as compared to the documentation for alternative repayment mechanisms, which tends to be highly variable.

In addition, we proposed to clarify that ACOs may use a combination of the designated repayment mechanisms, if needed, such as placing certain funds in escrow, obtaining a surety bond for a portion of remaining funds, and establishing a line of credit for the remainder. Thus, we proposed to revise our rule at § 425.204(f)(2) to indicate that an ACO may demonstrate its ability to repay shared losses owed by placing funds in escrow, obtaining surety bonds, establishing a line of credit, or by using a combination of these mechanisms. We sought comment on our proposed modifications to the repayment mechanism requirements and also welcomed comments on the availability and adequacy of reinsurance as a repayment mechanism.

Comment: Commenters specific suggestions regarding repayment mechanisms that were not addressed directly by our proposals as follows:

- ACOs should be required to meet the same rigorous financial reserve and solvency requirements as state-regulated risk-bearing entities such as organizations participating in Medicare Advantage.
- CMS should subsidize the ACO's cost for establishing a repayment mechanism.
- CMS should establish standards for selecting institutions that issue letters of credit or hold funds in escrow, similar to the requirements for sureties to be authorized by the Department of Treasury.
- CMS should establish standardized forms for ACOs to use, for example, a standardized surety bond form.

Response: We appreciate these comments and will keep them in mind when developing future proposed rule changes. We decline at this time to adopt more stringent repayment mechanism standards because there are very distinct differences between Shared Savings Program ACOs and Medicare Advantage plans. Specifically, as noted in our 2011 final rule, we believe that organizations participating in the Shared Savings Program are taking on performance-based risk and not insurance risk, the latter of which is retained by Medicare because ACO participants continue to bill and receive FFS payments as they normally would. Additionally, we decline at this time to further reduce the burden of the repayment mechanism requirement on ACOs, as suggested by commenters. We note that ACOs choosing to enter a two-sided model are required to accept additional up-front risk in exchange for the greater potential for reward. The cost of establishing a repayment mechanism is one additional up-front risk for ACOs. As we explained in November 2011 final rule, we believe that ACOs entering the two-sided model would likely be larger and more experienced ACOs or both, and thus have the experience, expertise and resources to meet the repayment requirements (76 FR 67940). Further, we believe the repayment mechanism requirement is an important safeguard against ACOs entering the two-sided model when they lack the capacity to bear performance risk. Adopting policies whereby CMS would subsidize the ACO's repayment mechanism would undermine the objectives of the repayment mechanism policy. We also decline at this time to require all ACOs, and their respective financial institutions, to use a specified format across all repayment mechanism instruments. We issued ''Repayment Mechanism Arrangements Guidance,'' available online *http://www.cms.gov/Medicare/Medicare-Fee-for-Service-Payment/sharedsavingsprogram/Downloads/Repayment-Mechanism-Guidance.pdf*, to explain the terms we would expect to see in various repayment mechanism arrangements, but did not go so far as to require use of a specified form. Given the newness of the program and our lack of experience with these arrangements for ACOs, it was our desire not to impede ACOs from working with financial institutions to establish the most appropriate repayment mechanism for their circumstance.

Comment: Several commenters opposed our proposal to limit alternative repayment mechanism options for ACOs and encouraged CMS to retain flexibility for ACOs to choose the repayment mechanism that best suits it. In particular, these commenters stated that they believe it is too early to remove alternative repayment mechanisms and reinsurance as permitted mechanisms for demonstrating the ability to repay shared losses owed to CMS because having as many options for a repayment mechanism as possible would align with CMS' desire to encourage organizations to take on two-sided risk. Commenters explained that reinsurance is a well-established and proven means of managing risk that is frequently used by organizations that manage capitated risk in commercial insurance contexts and that these policies are likely to become more available and standardized as ACOs and insurers gain more experience with shared savings models. A commenter went further and encouraged CMS to actively promote reinsurance as the best funding vehicle for successful ACOs, explaining that ACOs should create 'captive' insurance companies to holistically manage the emerging clinical, financial, and quality risks of the whole ACO enterprise. A commenter recommended that CMS retain an alternative repayment mechanism that would allow ACOs' shared losses to be carried over to subsequent years (for example, through deductions in FFS payments), rather than demanding full payment all at once.

On the other hand, a few commenters expressed specific support for the proposal to eliminate alternative repayment mechanisms and reinsurance as options for repayment stating that their removal would simplify program rules and options.

Response: As we indicated in our December 2014 proposed rule, based on our experience with the program to date, no Shared Savings Program ACOs have obtained reinsurance for the purpose of establishing their repayment mechanism. ACOs that explored this option told us that it is difficult to get reinsurance, in part, because of insurers' lack of experience with the Shared Savings Program and Medicare ACOs and because Shared Savings Program ACOs take on performance-based risk not insurance risk. In the proposed rule, we also explained that the terms of reinsurance policies for ACOs could vary greatly and prove difficult for CMS to effectively evaluate. In addition, based on our experience to date, an alternative repayment mechanism increases administrative complexity for both ACOs and CMS during the application process and we are more likely to reject it than one of the specified repayment mechanisms. However, we agree with stakeholders that reinsurance may become a viable option in the future. If it does, we intend to revisit this issue and may propose to add reinsurance as an option for ACOs to demonstrate their ability to repay shared losses owed to CMS. At this time, we continue to believe that CMS would be more readily able to evaluate the adequacy of the three remaining types of repayment arrangements, as compared to reinsurance policies and other alternative repayment mechanisms. In addition, ACOs may use a combination of the designated repayment mechanisms, if needed, such as placing

certain funds in escrow, obtaining a surety bond for a portion of remaining funds, and establishing a line of credit for the remainder.

FINAL ACTION: We are finalizing the revisions to our policy on repayment mechanisms. Specifically, we are finalizing the proposed revisions to our rule at § 425.204(f)(2) to indicate that an ACO may demonstrate its ability to repay shared losses owed by placing funds in escrow, obtaining surety bonds, establishing a line of credit, or by using a combination of these mechanisms.

5. Methodology for Establishing, Updating, and Resetting the Benchmark

a. Overview

Section 1899(d)(1)(B)(ii) of the Act addresses how ACO benchmarks are to be established and updated. This provision specifies that the Secretary shall estimate a benchmark for each agreement period for each ACO using the most recent available three years of per beneficiary expenditures for parts A and B services for Medicare FFS beneficiaries assigned to the ACO. Such benchmark shall be adjusted for beneficiary characteristics and such other factors as the Secretary determines appropriate and updated by the projected absolute amount of growth in national per capita expenditures for parts A and B services under the original Medicare fee-for-service program, as estimated by the Secretary. Such benchmark shall be reset at the start of each agreement period. Accordingly, through the initial rulemaking establishing the Shared Savings Program, we adopted policies for establishing, updating and resetting ACO benchmarks at § 425.602. Under this methodology, we establish ACO-specific benchmarks that account for national FFS trends.

As the statute requires the use of historical expenditures to establish an ACO's benchmark, the per capita costs for each benchmark year must be trended forward to current year dollars and then a weighted average is used to obtain the ACO's historical benchmark for the first agreement period. The statute further requires that we update the benchmark for each year of the agreement period based on the projected absolute amount of growth in national per capita expenditures for parts A and B services under the FFS program, as estimated by the Secretary. In the April 2011 proposed rule (76 FR 19609 through 19611), we considered a variety of options for establishing the trend factors used in establishing the historical benchmark and for accounting for FFS trends in updating the benchmark during the agreement period.

The statute outlines the scope of Medicare expenditures to be used in calculating ACO benchmarks. Section 1899(d)(1)(B)(ii) of the Act specifies that the benchmark is established " . . . using the most recent available 3 years of per-beneficiary expenditures for parts A and B services for Medicare fee-for-service beneficiaries assigned to the ACO." This provision of the Act further specifies: "Such benchmark shall be adjusted for beneficiary characteristics and such other factors as the Secretary determines appropriate."

In addition to the statutory benchmarking methodology established in section 1899(d), section 1899(i)(3) of the Act grants the Secretary the authority to use other payment models, including payment models that would use alternative benchmarking methodologies, if the Secretary determines that doing so would improve the quality and efficiency of items and services furnished under this title and the alternative methodology would result in program expenditures equal to or lower than those that would result under the statutory payment model.

Under the methodology established by the November 2011 final rule (§ 425.602) we calculate a benchmark for each ACO using a risk-adjusted average of per capita Parts A and B expenditures for original Medicare fee-for-service (FFS) beneficiaries who would have been assigned to the ACO in each of the three calendar years prior to the start of the agreement period. We trend forward each of the first 2 benchmark year's per capita risk adjusted expenditures to third benchmark year (BY3) dollars based on the national average growth rate in Parts A and B per capita FFS expenditures verified by the CMS Office of the Actuary (OACT). The first benchmark year is weighted 10 percent, the second benchmark year is weighted 30 percent, and the third benchmark year is weighted 60 percent. This weighting creates a benchmark that more accurately reflects the latest expenditures and health status of the ACO's assigned beneficiary population. In creating an updated benchmark we account for changes in beneficiary characteristics and update the benchmark by the OACT-verified projected absolute amount of growth in national per capita expenditures for Parts A and B services under the original fee-for-service program. In trending forward, accounting for changes in beneficiary characteristics, and updating the benchmark, we make calculations for populations of beneficiaries in each of the following Medicare enrollment types: ESRD, disabled, aged/dual eligible and aged/non-dual eligible. Further, to minimize variation from catastrophically large claims, we truncate an assigned beneficiary's total annual Parts A and B FFS per capita expenditures at a threshold of the 99th percentile of national Medicare FFS expenditures. Under section 1899(d)(1)(B)(ii) of the Act and § 425.602(c) of the Shared Savings Program regulations an ACO's benchmark must be reset at the start of each agreement period.

In the December 2014 proposed rule, we considered whether modifying the methodology used for establishing, updating, and resetting ACO benchmarks to account for factors relevant to ACOs that have participated in the program for 3 or more years would help ensure that the Shared Savings Program remains attractive to ACOs and continues to encourage ACOs to improve their performance, particularly those that have achieved shared savings. As discussed later in this section, we considered a range of modifications to the benchmarking methodology in order to expand the methodology for resetting benchmarks to account for factors relevant to continued participation by ACOs in subsequent agreement periods and to increase incentives to achieve savings in a current agreement period, specifically: (1) Equally weighting the three benchmark years; (2) accounting for shared savings payments in benchmarks; (3) using regional FFS expenditures (as opposed to national FFS expenditures) to trend and update the benchmarks; (4) implementing an alternative methodology for resetting ACO benchmarks that would hold an ACO's historical costs, as determined for purposes of establishing the ACO's initial historical benchmark for its first agreement period, constant relative to costs in its region for all of the ACO's subsequent agreement periods; and (5) implementing an alternative methodology for resetting ACO benchmarks that would transition ACOs to benchmarks based only on regional FFS costs, as opposed to the ACO's own historical costs, over the course of multiple agreement periods. Further, we considered whether to apply these changes broadly to all ACOs or to apply these changes only when resetting benchmarks for ACOs entering their second or subsequent agreement periods. We also considered whether to apply these changes to a subset of ACOs, such as ACOs participating

under a two-sided model (Tracks 2 and 3) or Track 3 ACOs only.

We considered and sought comment on using combinations of these approaches, as opposed to any one approach. Specifically, we considered revising the methodology for resetting ACO benchmarks by equally weighting the three benchmark years or accounting for shared savings payments received by an ACO in its prior agreement period or both, and using regional FFS expenditures instead of national FFS expenditures in establishing and updating the benchmark.

In considering these potential options for modifying the benchmarking methodology, we noted it is necessary to balance the desire to structure the program to provide appropriate financial incentives to ACOs with the need to protect the Medicare Trust Funds. We also noted the necessity of meeting the requirements for invoking our authority under section 1899(i) of the Act, where relevant.

Comment: Generally, commenters appreciated CMS' interest in modifying the program's current benchmarking methodology, particularly to improve the sustainability of the program. Commenters generally supported changes to the benchmarking methodology that would encourage continued participation and improvement by ACOs, thereby improving the program's sustainability. Some commenters suggested the need to improve the predictability, accuracy and stability of benchmarks over time. A commenter indicated that the revisions to the benchmarking methodology discussed in the proposed rule do not go far enough to address the program's inherent challenges to ACO success under the program, for instance pointing to the MSR.

Commenters pointed out the following perceived disadvantages of the program's current benchmarking methodology:

- Calculating the trend for the three years of the historical benchmark and the annual benchmark update using a national growth rate, or more generally not accounting for regional cost trends in benchmarks. Some commenters perceived disadvantages to ACOs in many regions because significant variation in year to year cost trends by market are not accounted for by using a single national dollar amount to update the benchmark.
- Existing rebasing methodology, based on ACO-specific historical spending, penalizes certain ACOs for past good performance and forces ACOs to chase diminishing returns in subsequent contract periods when the benchmark is reset. Some described this dynamic as requiring the ACO to continually beat its own best performance, or as a ''downward spiral,'' and by others as ''chasing one's tail.'' Some identified this issue as being of particular concern to existing low-cost ACOs.
- Existing risk adjustment methodology doesn't completely account for the health status of assigned beneficiaries.
- Current rebasing benchmarking methodology (rebasing with each new agreement period) leads to unstable benchmarks; others connected unstable benchmarks with assigned beneficiary churn.

Some commenters offered a mix of views on the advantages and disadvantages of ACO-specific benchmarks. For instance, higher cost ACOs are advantaged with higher benchmarks. Therefore, they are rewarded for their historical organizational inefficiency. ACOs with lower costs may be discouraged from participating under this benchmarking methodology. Some commenters suggested benchmarks that include factors other than the ACO's historical performance would be more appropriate, while others explained that the benchmarks should primarily focus on the historical costs of the ACO's unique population.

Commenters expressed a mix of views over whether the benchmark methodology should be revised to address incentives for existing high-cost and low-cost ACOs. Some commenters expressed concern that the current methodology for establishing and resetting ACO benchmarks disadvantages ACOs with historically good performance, and strongly recommended against any benchmarking methodology that would disadvantage those ACOs with historically good performance. Some commenters, including MedPAC, expressed their opposition to policies that would result in higher benchmarks for all ACOs, even high-spending ACOs. Several commenters explained that the program's benchmark methodology needs to take into account how efficient ACOs are when entering the program, while also providing an appropriate incentive for ACOs to continue their participation in subsequent agreement periods.

Some commenters stated that it would be premature for CMS to finalize any benchmarking methodology changes at this time. These commenters stated that CMS should perform additional modeling and analytic work on the alternatives discussed in the proposed rule and share the results of this analysis before putting forward detailed proposals on revisions to the benchmarking methodology through additional notice and comment rulemaking.

Response: We appreciate commenters' thoughtful consideration of the modifications to the benchmarking methodology we sought comment on in the December 2014 proposed rule. We agree with commenters who expressed that the benchmarking methodology is pivotal to the program's future direction, in terms of sustainability and the types of ACOs that choose to enter and remain in the program. In the following sections we discuss and finalize several modifications to our benchmarking methodology, which relate to the process for resetting the benchmark. These modifications are particularly important at this time in light of the upcoming rebasing for ACOs with 2012 and 2013 agreement start dates who elect to enter a second agreement period starting January 1, 2016. The comments made on these issues are important and were carefully considered in the developing the policies in this final rule, as well as in arriving at our decision, described in greater detail below, to pursue further rulemaking to make additional changes to the benchmarking methodology in the near future.

b. Modifications to the Rebasing Methodology

In the December 2014 proposed rule we discussed the possible implications of using the current benchmarking methodology when resetting the ACO's benchmark for its second or subsequent agreement period. We explained that by using the three historical years prior to the start of an ACO's agreement period in establishing benchmarks, an ACO's benchmark under its second or subsequent agreement period will reflect its previous performance under the program. Among ACOs whose assigned beneficiary population for purposes of resetting the benchmark closely matches their assigned beneficiary population for the corresponding performance years of the preceding agreement period, those ACOs that generated savings during a prior agreement period will have comparatively lower benchmarks for their next agreement period. Under these circumstances, we explained the application of the current methodology for establishing and weighting the benchmark years when resetting benchmarks could reduce the incentive for ACOs that generate savings or that are trending positive in their first

agreement period to participate in the program over the longer run or reduce incentives for ACOs to achieve savings in their first agreement period.

However, we also noted that a number of factors (such as changes in ACO participants) could affect beneficiary assignment for purposes of establishing ACO benchmarks in subsequent agreement periods, which may cause an ACO's benchmark in subsequent years and agreement periods to deviate from its benchmark established in the first agreement period.

To address concerns raised by stakeholders related to resetting benchmarks, we considered revising the methodology to equally weight benchmark years and account for shared savings earned by an ACO in its prior agreement period, as a way to encourage ongoing participation by successful ACOs and improve the incentive to achieve savings. We sought comment on these modifications, and whether, if adopted, these methodologies should be applied uniformly across all ACOs or only to ACOs who choose certain two-sided risk tracks.

(1) Equally Weighting the Three Benchmark Years

In the December 2014 proposed rule we sought comment on a methodology for resetting benchmarks in which we would weight the benchmark years equally (ascribing a weight of one-third to each benchmark year). We indicated, that if left unchanged, the application of the existing methodology for weighting the benchmark years at 10 percent for BY1, 30 percent for BY2 and 60 percent for BY3 when resetting benchmarks could reduce the incentive for ACOs that generate savings or that are trending positive in their first agreement period to participate in the program over the longer run, or reduce incentives for ACOs to achieve savings in their first agreement period. We explained that this alternative approach would have the most significant impact upon ACOs who generated savings during the preceding agreement period for an assigned beneficiary population that closely approximate the assigned beneficiary population used to determine their benchmark for the subsequent agreement period.

Comment: Many commenters supported equally weighting the three benchmark years, believing this change would likely result in more generous benchmarks compared to the existing methodology of weighting the benchmark years (10 percent BY1, 30 percent BY2, 60 percent BY3). In particular, this approach would help protect ACOs who had been successful in generating savings in their prior agreement period against having to beat their own best performance in a second or subsequent agreement period. A commenter explained that equal weighting would result in a more gradual lowering of the benchmark calculations and allow ACOs the opportunity to earn more savings. Several commenters explained that interventions put in place in the first and second performance years of an agreement period will have the most impact in performance year 3 (which would become BY3 of the next agreement period) and their belief that equal weighting of the benchmark years would address this issue more effectively than the weighting approach under the current methodology. A commenter pointed to the use of equal weighting of baseline years in the later years of the Pioneer ACO Model.

Others disagreed with implementing this change explaining that the most accurate predictor of an ACO's costs would be based on expenditures from the year prior to the start of the ACO's agreement period. Many of these commenters seemed to favor the program's existing weighting approach of 10 percent BY1, 30 percent BY2, and 60 percent BY3. Several commenters expressed concern that equal weighting the benchmark years does not appear to adequately address changes in an ACO's composition over time, particularly for ACOs who have expanded/changed their geography and network.

A commenter disagreed with our conclusion about the likely impact of equal weighting on ACOs whose participant composition remains stable, explaining that a change to equal weighting would have minimal impact to ACOs with stable populations and costs. This commenter also indicated that equal weighting would not reflect inflationary costs.

A commenter pointed out a tradeoff with moving to equal weighting: making this modification may disadvantage ACOs that are struggling to achieve savings, but on the other hand without this change successful ACOs may be disproportionately punished for their success.

Several commenters suggested the following alternatives to the proposed policy:

- Apply equal weighting of the benchmark years beginning with the ACO's first agreement period.
- Equal weighting in the first and third agreement periods, but not the second. A commenter explained that by equally weighting the second agreement period's benchmark years there could be a perverse incentive to increase costs substantially in the first agreement period to obtain a higher benchmark going into the second agreement period. However, the commenter pointed out the current weighting approach could create similar incentives to increase costs substantially in year 3 to obtain a higher benchmark. In either event, the ACO would then be entering its next agreement period in a very high cost position, jeopardizing future shared savings or exposing it to very high risk under the two-sided model.
- Equal weighting should be used in resetting benchmarks for ACOs who generated savings beneath their MSR (trending positive) under their prior agreement period.

A commenter recommended further analysis about the risk profile of beneficiaries assigned during benchmark years before switching to equal weighting.

Response: We appreciate commenters' support for the approach of equally weighting an ACO's benchmark years when resetting the ACO's benchmark under a second or subsequent agreement period and are revising the regulations to finalize this policy. We agree with commenters that if an ACO generates savings in its first agreement period it is likely that the impact on claims would be most significant in the second or third performance year as opposed to being uniformly distributed across all three performance years. As we explained in the December 2014 proposed rule, this hypothesis is supported by the following factors:

- There may be a lag between when an ACO starts care management activities and when these activities have a measurable impact upon expenditures for the ACO's assigned beneficiary population.
- ACOs may improve their effectiveness over time as they gain experience with population management and improve processes.
- There may be higher care costs during the early period of performance to treat or stabilize certain patients, as the ACO's care management activities involving these patients commence.

Once stabilized, these patients may show relatively lower care costs over the course of time due to more effective, coordinated and high quality care.

As we stated in the December 2014 proposed rule, we believe that under these circumstances, resetting the benchmark for ACOs starting a second or subsequent agreement period under the Shared Savings Program becomes a trade-off between the accuracy gained by weighting the benchmark years at 10 percent for BY1, 30 percent for BY2, 60 percent for BY3, and the potential for

further reducing the benchmarks for these ACOs by giving greater weight to the later performance years of the preceding agreement period. Consistent with the concerns raised by some commenters, we continue to believe that, if unchanged, the application of the current methodology for weighting the benchmark years when resetting benchmarks could reduce the incentive for ACOs that generate savings or that are trending positive in their first agreement period to participate in the program over the longer run, or reduce incentives for ACOs to achieve savings in their first agreement period. We believe an appropriate approach to addressing these concerns is equally weighting the benchmark years when resetting the ACO's historical benchmark for its second or subsequent agreement period. In particular, we believe this adjustment is one component of establishing a benchmark rebasing methodology to provide appropriate incentives for ACOs to improve and maintain high performance in subsequent agreement periods.

We continue to believe in the importance of maintaining the current weighting approach of 10 percent BY1, 30 percent BY2, and 60 percent BY3 when establishing the historical benchmark for an ACO's initial agreement period because giving the greatest weight to the ACO's most recent prior cost experience improves the accuracy of the benchmark. Therefore, we decline to apply this modified weighting approach to a subset of these ACOs, as suggested by some commenters, although we may revisit this decision in upcoming rulemaking on additional changes to the benchmarking methodology.

FINAL ACTION: We are revising § 425.602(c) to specify that in resetting the historical benchmark for ACOs in their second or subsequent agreement we will weight each benchmark year equally. More generally, we are also revising the title of provision 425.602 to clarify that it contains policies relevant to the original calculation of the benchmark at the start of an ACO's first agreement period and to the updates to the benchmark that are made during the agreement period and resetting the benchmark at the start of each subsequent agreement period.

(2) Accounting for Shared Savings Payments When Resetting the Benchmark

In the December 2014 proposed rule we sought comment on a methodology for resetting ACO benchmarks that would account for shared savings earned by an ACO in its prior agreement period as a way to encourage continued participation by successful ACOs and improve the incentive to achieve savings. We indicated that we were considering an approach under which we develop per a beneficiary average based on the shared savings payment for the particular performance year under the prior agreement period and apply this adjustment on a per beneficiary basis to the assigned population for the corresponding benchmark year. We also sought comment on whether to make a symmetrical adjustment to the benchmarks for ACOs that owed losses in a previous agreement period. We noted that by making the adjustment only for ACOs that receive shared savings payments in their prior agreement period, some ACOs that reduce expenditures would not receive the benefit of this adjustment. Specifically, ACOs whose performance year expenditures are lower than their benchmark expenditures by an amount that did not meet or exceed their MSR, and ACOs that generated savings outside their MSRs but failed to satisfy the quality reporting standard, would not receive the adjustment. Additionally, we noted that the availability of performance data relative to timely creation of benchmarks would need to be addressed. We anticipate completing financial reconciliation for an ACO's most recent prior performance year midway through its current performance year. As a result, one implication of relying on the availability of performance data from the most recent prior performance year is that it would delay the finalization of an ACO's historical benchmark for its subsequent agreement period until well into the first performance year.

Comment: Many commenters supported a modified methodology for resetting an ACO's benchmark for its second or subsequent agreement period under which we would account for the ACO's shared savings in its prior agreement period. Some commenters urged CMS to add in all savings an ACO generated (as opposed to savings earned), for instance, to protect ACOs who generated savings below their MSRs, as well as to account for CMS' share of savings in this adjustment. A commenter suggested an alternative approach for reallocating savings between ACOs who met or exceeded their MSRs, and those who generated savings close to but beneath their MSR. Overall, commenters expressed that they believe that this change would make the historical benchmark more reflective of the total cost of care for the beneficiaries during the prior agreement period and would ultimately encourage continued participation in subsequent agreement periods by not penalizing those ACOs who were able to make cost improvements.

Several commenters expressed concerns that these changes may not go far enough to adequately adapt the benchmark for future agreement periods. Several commenters indicated this approach would not adequately account for changes in the risk profile of the ACO's patient population. A commenter indicated that accounting for savings alone may only capture a percentage of the improvement (efficiencies) the ACO achieved, recommending for example, that CMS also adjust the ACO's MSR based on total savings produced for Medicare.

Another commenter, opposed to this approach, explained that including savings in rebasing will only widen the gap between low and high cost providers, and recommended that this approach not be used in the program's financial model.

Others urged CMS against including shared loss payments from an ACO's prior agreement period under the two-sided track, as this would make it even harder for struggling ACOs to generate savings under a new agreement period.

Response: We agree with commenters on the importance of accounting for the financial performance of an ACO during its prior agreement period in resetting the ACO's historical benchmark. In particular, we believe that this adjustment is important for encouraging ongoing program participation by ACOs who have achieved success in achieving the three-part aim in their first agreement, by lowering expenditures and improving both the quality of care provided to Medicare FFS beneficiaries and the overall health of those beneficiaries. Absent this adjustment, an ACO who previously achieved success in the program may elect to terminate its participation in the program rather than face a lower benchmark that reflects the lower costs for its patient population during the three most recent prior years.

We are further persuaded by commenters of the need to account for all savings between the benchmark and the ACO's MSR as well as savings that were generated and shared that met or exceeded the ACO's MSR. Specifically, we believe that accounting for any savings generated by the ACO in the previous agreement period would increase the benchmarks of ACOs who are working to achieve the program's goal of lowering growth in Medicare FFS expenditures. This way, ACOs who may have lowered expenditures, but not by enough to earn a performance

payment, will also benefit from this adjustment. However, we believe it is important to adjust the level of shared savings that we add into benchmark year expenditures to prevent a situation in which the reset benchmark becomes overly inflated based on prior performance to the point where ACOs need to do little to maintain or change their care practices in order to generate savings.

At the time of this final rule, there is limited data available on ACO financial performance because results from the second and third performance years for ACOs seeking to begin their second agreement period on January 1, 2016 are not yet available. We are particularly concerned about finalizing a rebasing policy that would advantage an ACO who underperforms based on cost and quality experience, and we are seeking to target adjustments to ACOs that have been successful in the program but who may face challenges in continuing to build on that success in subsequent agreement periods. Therefore, we are finalizing an approach whereby we will account for savings generated by an ACO in rebasing its benchmark if the ACO generated net savings across the three performance years under its first agreement period, and will also account for the ACO's quality performance in each performance year under its first agreement period. We will also limit the adjustment to the benchmark for the second agreement period to the average number of assigned beneficiary person years under the ACO's first agreement period. We believe imposing this limit is important in order to help ensure that the adjustment does not to exceed the amount of net savings generated by the ACO during the first agreement period due to ACO participant list changes that may increase the number of assigned beneficiaries in the second agreement period. We will use data from the ACO's finalized financial reconciliation report for the performance year which corresponds to the benchmark year for the second agreement period to calculate the adjustment. The calculation will include the following steps:

- Step 1. Determine whether the ACO generated net savings. For each performance year we will determine an average per capita amount reflecting the quotient of the ACO's total updated benchmark expenditures minus total performance year expenditures divided by performance year assigned beneficiary person years. However, the ACO's total updated benchmark expenditures minus total performance year expenditures may not exceed the performance payment limit for the relevant track. If the sum of the 3 performance year per capita amounts is positive, the ACO would be determined to have net savings and we would proceed with Steps 2 and 3. If the sum of the 3 performance year per capita amounts is zero or negative, we will not make any adjustment to the ACO's rebased benchmark to account for any savings the ACO may have generated under its prior agreement period.
- Step 2. Calculate an average per capita amount of savings reflecting the ACO's final sharing rates based on quality performance. We will average the performance year per capita amounts determined in Step 1 to determine the average per capita amount for the agreement period. We will also determine the ACO's average final sharing rate, based on an average of the ACO's quality performance in each performance year of the agreement period. Therefore, the average per capita amount of savings will account for those situations where an ACO's sharing rate for a performance year is set equal to zero (based on the ACO's failure to meet the quality performance requirements in that year). We will then calculate an average per capita amount of savings which is the product of the average performance year per capita amount and the average sharing rate based on quality performance.
- Step 3. Add the average per capita amount of savings determined in Step 2 to the ACO's rebased historical benchmark developed following the methodology specified under § 425.602 as modified by this final rule. The additional per capita amount will be applied to the ACO's rebased historical benchmark for a number of assigned beneficiaries (expressed as person years) not to exceed the average number of assigned beneficiaries (expressed as person years) under the ACO's first agreement period. Imposing this limit will help ensure that the adjustment does not exceed the amount of net savings generated by the ACO during the first agreement period due to ACO participant list changes that may increase the number of assigned beneficiaries in the second agreement period.

We are adding a new provision at § 425.602(c)(2)(ii) to reflect this adjustment. We further note that ACOs with April 1, 2012 and July 1, 2012 agreement start dates had a first performance year spanning a 21-month or 18-month period (respectively), concluding December 31, 2013. In calculating the average per capita amount of savings for these ACOs, we will use calendar year 2013 data from the performance year 1 final financial reconciliation for these ACOs, to align with the same 12 month period for the corresponding benchmark year under the new agreement.

To illustrate how this calculation will be performed, take as an example the following hypothetical Track 1 ACO:

TABLE 7—HYPOTHETICAL PERFORMANCE DATA—INCORPORATING SAVINGS INTO REBASED BENCHMARK

	PY1	PY2	PY3	Average
A. Person Years	31,024	32,579	32,463	32,022 (average of A for PY1, PY2, PY3).
B. Total benchmark expenditures minus total expenditures.	$19,265,778.00	($48,470,676.00)	$21,824,075.00	
C. Per capita total benchmark minus total expenditures (C = B/A).	$621.00	($260.00)	$672.28	$344.42 (average of C for PY1, PY2, PY3).
D. Final Sharing Rate	50%	0.0%	40%	30% (average of D for PY1, PY2, PY3).
E. Average per capita amount to add to Rebased Historical Benchmark.	—	—	—	$103.33 (E = average C * average D).

For this example, it is assumed that the amount of savings or the ACO's total benchmark expenditures minus total expenditures is less than its performance payment limit, equivalent to 10 percent of the ACO's updated historical benchmark in each performance year. It is also assumed that in PY2, the ACO did not meet the quality performance standard and therefore did not qualify to share in any portion of shared savings (*i.e.* final sharing rate equals zero). Under Step 1 of the calculation, we sum the per capita total benchmark minus total expenditure values ($621, −$260, $672.28) to determine whether the value is greater than zero and therefore whether the ACO generated net savings. Under Step 2 of the calculation, we determine the average performance year per capita amounts. In the illustration, this average is $344.42. We also determine that the ACO's average final sharing rate is 30 percent (50% + 0% + 40% divided by 3). We calculate an average per capita amount of $103.33 ($344.42 * 0.3) to add to the ACO's rebased historical benchmark. The average per capita amount of $103.33 would only be applied to the rebased benchmark for a number of assigned beneficiary person years not to exceed 32,022 person years, the average of the ACO's performance year assigned beneficiary person years under its first agreement period.

At this time, we have decided not to adopt a policy under which we would adjust the ACO's rebased benchmark to account for losses generated or shared by ACOs in an earlier agreement period if the sum of the ACO's prior agreement period performance year per capita amounts is zero or negative. Our policy would take into account losses generated during an agreement period by offsetting any savings in determining if there were net savings during the first agreement period. We are particularly concerned about discouraging continued participation in the program by Track 1 ACOs who are making a bona fide effort to meet the program's goals but need more than several years to establish the strategies and operations to be successful in the program. In these cases, an adjustment to account for net losses in the ACOs' rebased benchmarks could make it very difficult for the ACOs to achieve success in their next agreement period. We believe the approach we are adopting in this final rule balances the interests of the Medicare Trust Funds and interests of ACOs entering their second agreement period. In particular, we believe this adjustment will encourage continued participation by ACOs who have been previously successful in the program by more gradually decreasing their rebased benchmarks in a way that will reflect their previous success in lowering expenditures for assigned beneficiaries while also not discouraging participation by ACOs who did not achieve net savings under their first agreement period. However, we remain concerned about the possibility for unintended benefits to ACOs from the revised rebasing methodology we are adopting in this final rule. We are especially concerned about a situation where a Track 1 ACO generates statistically significant losses in one agreement period which in turn yields a higher benchmark under a subsequent agreement period. Therefore, we intend to carefully evaluate the effects of rebasing on ACOs who have generated losses under a prior agreement period and may revisit this issue in future rulemaking.

Comment: A few commenters addressed the point that incorporating performance year three data into the ACO's benchmark for the following agreement period would delay the availability of the ACO's new benchmark. Several commenters explained that this delay in issuing benchmarks was acceptable because of the need to await financial performance data from the previous agreement period. However, these commenters suggested that a preliminary benchmark excluding the shared savings payments be provided in a timely manner. A commenter expressed concern about the delay in producing the benchmark as CMS calculates the third performance year results. Although the commenter found some merit in the approach of including shared savings in the ACO's benchmark, the commenter placed greater weight on the need for ACOs to receive more timely data to make decisions and changes to impact the three-part aim.

Response: We appreciate commenters' concerns about an ACO's need for timely, actionable data on its benchmark close to the start of the ACO's agreement period. We currently provide ACOs with a preliminary benchmark close to the start of the agreement period for informational purposes. According to our current practice, we will continue to provide an ACO with a preliminary historical benchmark close to the start of the ACO's agreement period. We will issue a final benchmark once complete data are available, including any adjustment for savings in the prior agreement period.

Comment: Some commenters suggested that we implement some combination of the five alternative benchmarking methodologies discussed in the December 2014 proposed rule. Commenters typically suggested using a combination of equally weighting the three benchmark years and accounting for shared savings payments in benchmarks. Some suggested that, in addition, we use regional FFS expenditures (as opposed to national FFS expenditures) to trend and update the benchmarks, or implement an alternative methodology for resetting ACO benchmarks that would hold an ACO's historical costs constant relative to costs in its region for all of the ACO's subsequent agreement periods, or both. A commenter suggested adopting a combination of equally weighting the three benchmark years and using regional FFS expenditures (as opposed to national FFS expenditures) to trend and update the benchmarks.

A commenter, favoring the approach where we would transition ACOs to benchmarks based only on regional FFS costs, expressed concern that the other alternatives do not align with methods used for updating payments in other Medicare programs, such as Medicare Advantage.

Commenters supporting the modifications under which we would equally weight the three benchmark years and account for shared savings payments in resetting benchmarks often indicated that these changes would protect against creating benchmarks that progressively require ACOs to beat their own best performance.

Response: We appreciate commenters' thoughtful consideration of using a combination of the benchmarking alternatives discussed in the December 2014 proposed rule. We agree with commenters who expressed that accounting for an ACO's shared savings during its prior agreement period taken together with equally weighing the ACO's benchmark years would more gradually lower the benchmarks of ACOs that perform well. This, in turn, could increase the incentive for ACOs to continue to generate shared savings and improve quality because they will not be penalized for this success in future agreement periods. Moreover, these modifications may encourage ACOs to enter the program's two-sided models (such as the new Track 3), which offer higher final sharing rates, because adjusting ACO benchmarks to reflect successful participation during one agreement period may improve the potential for ACOs to receive shared savings in the next agreement period. We believe these modifications will address, in part, stakeholders' concerns regarding sustainability of the model.

Further we consider these modifications to the rebasing methodology important for addressing the immediate issue of how to rebase the benchmarks of ACOs whose second agreement period will begin January 1, 2016.

As explained later in this section, while we are not making broader modifications to the benchmarking methodology in this final rule to set ACO benchmarks based in part on regional FFS costs, we anticipate issuing a proposed rule this summer that would propose more comprehensive revisions to the program's benchmarking methodology. As we further develop these proposals, we will take into account the possible interactions between these alternatives and the modifications to the rebasing methodology to equally weight the benchmark years and account for savings generated in an ACO's prior agreement period that we are adopting in this final rule. Although we believe it is appropriate at this time to finalize a policy for accounting for savings generated by an ACO under its initial agreement period in resetting the ACO's benchmark, applicable to its second agreement period, we believe it will be critical to revisit the policy of accounting for an ACO's savings generated in a prior agreement period when resetting its benchmark in conjunction with any change to the methodology for establishing updating and resetting benchmarks to incorporate regional FFS costs. Accordingly, we plan to carefully evaluate the effects of the policies we are adopting in this final rule and will revisit these policies in the future rulemaking regarding the benchmarking methodology.

FINAL ACTION: We are finalizing revisions to § 425.602(c) to specify that in resetting the historical benchmark for ACOs entering their second agreement period we will make an adjustment to reflect the average per capita amount of savings earned by the ACO in its first agreement period, reflecting the ACO's financial and quality performance, and number of assigned beneficiaries, during that agreement period. The additional per capita amount will be applied to the ACO's rebased historical benchmark for a number of assigned beneficiaries (expressed as person years) not to exceed the average number of assigned beneficiaries (expressed as person years) under the ACO's first agreement period. If an ACO was not determined to have generated net savings in its first agreement period, we will not make any adjustment to the ACO's rebased historical benchmark. We will use performance data from each of the ACO's performance years under its first agreement period in resetting the ACO's benchmark under its second agreement period. For ACOs with April 1, 2012 and July 1, 2012 agreement start dates that will be entering their second agreement period in 2016, we will use calendar year 2013 data from the performance year 1 final financial reconciliation for these ACOs, to align with the same 12 month period for the corresponding benchmark year in performing this calculation. As we currently do now, we will continue to issue a preliminary benchmark to an ACO, close to the start of the ACO's subsequent agreement period, based on available data. We will then issue a final historical benchmark once we have the data needed to determine the ACO's financial and quality performance for its third performance year under its prior agreement and complete the benchmark calculation as required under §§ 425.602(a) and 425.602(c).

c. Use of Regional Factors in Establishing, Updating and Resetting Benchmarks

As discussed in the December 2014 proposed rule, some stakeholders have expressed concern that the existing benchmarking methodology does not sufficiently account for the influence of cost trends in the surrounding region or local market on the ACO's financial performance and does not suitably encourage ACOs to achieve and maintain savings. Therefore, we discussed and sought comment on several options and methods for incorporating regional factors when establishing, updating, and resetting the benchmark.

First we discussed use of regional FFS expenditures, instead of national FFS expenditures, to trend forward the most recent three years of per beneficiary expenditures for Parts A and B services in order to establish the historical benchmark for each ACO and to update the benchmark during the agreement period. Specifically, we sought comment on an option that would implement an approach similar to the method for updating benchmarks used under the PGP demonstration.

Second, we discussed an approach under which the ACO's benchmark from the prior agreement period would be updated according to trends in FFS costs in the ACO's region, effectively holding a portion of the ACO's reset benchmark constant relative to its region. In the proposed rule, we discussed two options for implementing this methodology:

- Option 1: An ACO's benchmark for its initial agreement period would be set according to an approach similar to the existing methodology. For subsequent agreement periods, the trend in regional costs would be calculated using an approach based on the PGP demonstration, and the historical benchmark would be updated by increasing it by a percentage equal to the percentage increase in regional costs.
- Option 2: In resetting the benchmark, information regarding the ACO's historical costs relative to its region prior to its first agreement period would be used to develop a scaling factor that would be applied to regional FFS benchmarks for a future agreement period.

Third, we discussed an approach under which, over the course of several agreement periods, we would transition ACOs from benchmarks based on their historical costs toward benchmarks based only on regional FFS costs. Under this approach, ACO benchmarks would gradually become more independent of the ACO's past performance and gradually more dependent on the ACO's success in being more cost efficient relative to its local market.

We also sought comment on a number of technical issues specific to these alternatives, including: How to define an ACO's region and specifically, the ACO's regional reference population; how to account for changes in an ACO's Participant TINs from year-to-year and across agreement periods; and considerations related to risk adjusting benchmarks based on regional factors. We also discussed and sought comment on how broadly or narrowly to apply these alternative benchmarking approaches to the program's Tracks, and the timing for implementing any changes.

We welcomed commenters' detailed suggestions on our considerations of factors to use in resetting ACO benchmarks and for the alternative benchmark methodologies; as well as considerations or concerns not described in the proposed rule. In particular, we sought commenters' input on whether an approach that transitions ACOs to regional benchmarks would encourage continued participation by existing low-cost and high-cost ACOs. We also requested commenters' input on alternatives not described in the proposed rule for resetting benchmarks to encourage ongoing participation by ACOs who perform well in the program and are successful in reducing expenditures for their assigned beneficiaries. We also sought comment on whether these alternative benchmarking approaches would have unintended consequences for ACO participation in the program, for the

Medicare Trust Funds, or for Medicare FFS beneficiaries.

We signaled our intent to carefully review any comments received on these issues during the development of the final rule and to determine whether any change to our current methodology for establishing benchmarks would be necessary and appropriate and would meet relevant statutory requirements under section 1899(d)(1)(B)(ii) and section 1899(i)(3) of the Act.

Comment: Many commenters generally indicated their support for revising the benchmarking methodology to reflect regional cost variation. Some commenters specifically addressed the options discussed in the December 2014 proposed rule about how to incorporate regional costs into ACO benchmarks. Some commenters provided an array of alternative suggestions on how to incorporate regional costs into ACO benchmarks, including options not explicitly discussed in the proposed rule. Others expressed their preference for continuing to implement a benchmarking methodology that establishes ACO-specific benchmarks that account for national FFS trends.

Some commenters generally encouraged CMS to reflect location-specific changes in Medicare payment rates in the benchmarks by using regional factors (based on regional FFS costs) in establishing and updating ACO-specific benchmarks. Others supporting this approach explained that regional expenditures more accurately reflect the health status of populations (for risk adjustment), differences between rural and urban areas or market/regional differences more generally, and differences in beneficiaries' socio-economic status. A commenter who supported use of regional costs in updating benchmarks indicated this would better address the effects of churn in the ACO's assigned population, which the commenter explained leads the ACO's population to become less reflective of its historical population and more reflective of its regional population. On the other hand, some commenters encouraged CMS to continue using factors based on national FFS costs to trend and update benchmarks. For example, a commenter expressed concern that using regional FFS expenditures instead of national FFS expenditures in establishing and updating the benchmark may further disadvantage existing low-cost ACOs. Others supported allowing ACOs a choice of either regional and national trends, or applying the higher of regional or national trends, or applying regional trends to ACOs in existing high-cost regions and national trends to ACOs in existing low-cost regions. Several commenters offered conflicting views on whether moving to use of regional FFS costs in establishing historical and updated benchmarks would advantage or disadvantage existing low cost providers.

Some commenters supported the option under which we would hold an ACO's historical costs constant relative to its region, or similar approaches. A commenter expressed support for this approach if it meant that the savings in one performance period would not work against the ACO in the next agreement period. Several commenters specifically favored the option discussed in the proposed rule, under which we would use a scaling factor for adjusting the ACO's historical costs under its first agreement period in developing its benchmark for future agreement periods. Several commenters disagreed with this alternative, concerned that this method would: (1) Create a static benchmark based on the organization's historical performance that does not evolve to account for the changing performance or patient mix of the ACO over time, and as a result could create disincentives for the ACO to grow or expand to other locations or communities for fear of attracting a disproportionate prevalence of sick patients (if not reflected in the population used to establish its initial benchmark); (2) fail to account for changes in FFS spending trends that occur over time, as new codes and payment rules are introduced; (3) require additional trending which would create a benchmark methodology that fluctuates greatly depending on the region that is the basis for comparison and make a more complicated benchmarking methodology that is harder to implement, forecast and explain.

Of the options to incorporate regional FFS costs into ACO benchmarks, the option whereby we would transition ACOs to benchmarks based only on regional FFS costs over the course of multiple agreement periods seemed to garner the greatest support from commenters. Several commenters believe that this benchmarking process best recognizes ACOs' concerns about performance relative to other providers in the region, while also encouraging ACOs to continue to improve over time. A commenter further explained that this approach accounts for the halo effect of the ACO in its community, where non-ACO providers in the community have become more efficient due to the presence of an ACO. Commenters offered mixed views about the impact of this approach on existing high- and low-cost ACOs, with a commenter explaining that an ACO's incentive to participate in the program would depend on whether the ACO's market was determined to be cost efficient or inefficient. Others expressed concerns that this approach would make it difficult for ACOs to add additional ACO participants. Therefore it would slow adoption of the Shared Savings Program because ACOs may be reluctant to risk including new providers with historically higher costs, and it similarly may incentivize ACOs to terminate, rather than remediate, high-cost providers within the ACO.

Commenters expressed the importance of defining the regional comparison group under this alternative for transitioning ACOs to benchmarks based on regional FFS spending, particularly in light of regional variations in payment policies. Several commenters addressing this option suggested that the metric for efficient, cost-effective care should be consistent across providers within a region, including Medicare Advantage plans. A commenter suggested segmenting the benchmark by Medicare enrollment type (ESRD, disabled, aged/dual eligible, aged/non-dual eligible) when using regional FFS costs to establish the ACO's benchmark, as is currently done in the program's financial methodology, and making further adjustments for the cost of care of dually eligible and ESRD beneficiaries.

On the topic of the pace for transitioning ACOs to regional benchmarks, commenters' suggestions ranged from rapid transition (within the first agreement period) to a slower pace (for example, over the course of two, three, four, or even five agreement periods). Several commenters suggested a different pace of transition depending on the ACO's historical costs relative to its market, recommending a slower transition for higher costs ACOs and a faster transition for lower cost ACOs. Others suggested a different pace for transitioning more or less experienced ACOs, or an approach under which an ACO could determine its own pace of transitioning to a regional benchmark. A commenter indicated this approach should initially be implemented under the two-sided payment models, but that all ACOs should be transitioned to regional FFS benchmarks by year 2021.

Commenters addressing the three options for incorporating regional costs into benchmarks often pointed to the importance of the definition of the ACO's region to the credibility of these benchmarking methodologies. Several commenters supported a methodology for defining an ACO's region and ACO-

specific regional FFS costs that would be similar to the approach used in the Physician Group Practice (PGP) demonstration as described in the proposed rule. Others suggested alternatives including using Medicare Advantage (MA) county-level FFS rates, or using Hospital Referral Region (HRR) geographies weighted by beneficiary residence, or Metropolitan Statistical Areas (MSAs). Commenters also offered detailed suggestions on how to define an ACO's reference population, with a fairly even split between those commenters that favored including and excluding an ACO's assigned beneficiaries. Others offered considerations for selecting an ACO's counties and for defining its reference population, relative to where assigned or attested beneficiaries reside or receive services. Others stressed the importance of a sufficiently large reference population, offering suggestions on how to expand the ACO's region if needed. Some commenters pointed out the importance of regional comparisons due to the variation in local rules and regulations as they pertain to FFS payment, and variation in the socio-economic status of beneficiaries (particularly dually eligible beneficiaries). A commenter explained that under an approach like that used for the PGP demonstration, an ACO could become a winner or loser under the program based in large part on the comparison group, which reflects how other providers in the region are performing. Moreover, for a voluntary program like the Shared Savings Program, organizations may choose to participate simply because their costs are lower than those of the region, potentially leading to significant increases in Medicare costs without improvements in quality.

Few commenters addressed concerns about accounting for ACO Participant List changes under the alternative benchmarking methodologies discussed in the December 2014 proposed rule. Several commenters favored an approach under which we would adjust the ACO's benchmark each performance year as ACO participants are added or removed, and a commenter suggested we account for changes in the health status or disease burden of the ACO's assigned beneficiary population arising from the changes in the ACO Participant List. A commenter further recommended a more fluid approach under which the benchmark would be risk adjusted based on changes in the assignment of individual beneficiaries.

Some commenters addressed the need to revise the program's risk adjustment methodology when moving to an alternative benchmarking methodology. Commenters suggested, for instance: Using a regional HCC growth rate or accounting for regional variation in updating the HCC formulas; using a concurrent risk adjustment methodology, and doing so in combination with a demographically adjusted regional FFS cost baseline; creating a risk adjustment factor by comparing the HCC coding between the ACO assigned beneficiaries and the regional comparison population; following the Medicare Advantage (MA) methodology for risk adjustment; and readjusting the risk determination of a population after removing beneficiaries determined ineligible for assignment. Some suggested that CMS not be overly restrictive in applying regional normalization and coding intensity adjustments. Others suggested CMS specifically account for other factors in regional adjustments such as changes in access to care for low-cost populations, and the socio-economic risk profile of beneficiaries. A commenter requested that risk adjustment be based on the ACO's historical performance and not the market's historical performance.

Although the December 2014 proposed rule did not explicitly request comment on the program's existing risk adjustment methodology, many commenters took the opportunity to criticize this aspect of the calculation of ACO benchmarks. Almost all commenters addressing the program's existing risk adjustment methodology suggested that it inadequately captures the risk and cost associated with assigned beneficiaries. Commenters explained their concern that by only counting HCC scores that work against the ACO for the continuously enrolled population, the current policy actually disadvantages ACOs that take on the management of the sickest populations with the greatest medical need. Of the alternatives to the current risk adjustment methodology presented by commenters, many commenters urged CMS to incorporate the full growth in HCC risk scores across each performance year (upward and downward adjustment), or, at a minimum, to recognize the full growth in risk scores for beneficiaries in their first year of assignment to the ACO. In justifying this alternative, commenters suggested that ACOs are less susceptible to coding practices, for instance compared to MA plans, because ACOs can be comprised of entities with no influence over the coding practices at other facilities or settings. Others suggested accounting for full risk score growth could address CMS' concerns about providers' avoidance of at-risk beneficiaries. Some commenters explained that failing to fully adjust for changes in beneficiary health status ignores the fact that even when care is optimally managed, individuals become sicker. Therefore, a beneficiary is more expensive to treat as disease processes progress or when they initially present. Some commenters indicated that the program's current risk adjustment methodology requires vigilant ongoing coding of chronic conditions to prevent a decline in risk scores. Others recommended approaches under which CMS would encourage improved coding practices by providers (for example, rural providers). Other commenters envisioned that a better approach would involve more frequent risk adjustment (for example, quarterly), use of different risk scores (for example, concurrent performance year risk scores, or regionally-based risk factors, or projected risk based on expected cost of beneficiary care), or allow for ACOs to send in supplemental risk score data as is done under Medicare Advantage. Others suggested that CMS' concerns about upcoding could be addressed through vigilant monitoring or placing a cap on upward risk adjustment growth (for example, relative to a national or regional growth rate). A commenter indicated the importance of incorporating national FFS payment changes in the risk adjustment methodology. Some urged CMS to continue researching alternative risk adjustment models and consider additional changes to increase the accuracy of the risk adjustment methodology.

Commenters suggested CMS consider a variety of additional methodologies for revising the program's benchmarks, sometimes creating opposing alternatives. MedPAC offered a vision for both the near and long term evolution of the program's benchmarking methodology. In the short term, CMS would keep the existing rebasing methodology, but would not rebase an ACO that met a two-part test, which would leave benchmarks for lower-spending ACOs unchanged. In the longer term, CMS would move ACOs from a benchmark based on the ACO's historical cost experience to a common (equitable), local FFS-based benchmark where: FFS spending is defined to include spending on beneficiaries in ACOs as well as on beneficiaries in traditional FFS; the risk adjustment methodology reflects expected increases in costliness of the beneficiary's care and protects against coding differences; and better quality performance is

rewarded with a higher benchmark (a bonus-only model). MedPAC encouraged CMS to focus on creating the conditions that will allow efficient ACOs to be successful, rather than establishing an environment which creates as many ACOs as possible. Other commenters suggested the following alternatives:

- Less frequent rebasing. For instance, carry forward the ACO's first agreement period benchmark into subsequent agreement periods. That is, do not reset or update this benchmark, or alternatively, trend forward the first agreement period benchmark in subsequent agreement periods. Some commenters suggested limited rebasing, or alternative rebasing for low-cost ACOs. Other commenters asked whether CMS could establish a benchmark floor, an actuarial number beyond which CMS would not lower an ACO's benchmark.
- More frequent rebasing. For instance, reset the ACO's benchmark annually during each year of the agreement period.
- Annually increase the ACO's benchmark using a region-specific consumer price index (CPI).
- Measure ACO performance against a national baseline, considering also the ACO's own past performance and the ACO's performance relative to others in its market.
- Reward low-cost providers for improvement in performance regardless of their performance compared to the national or local trend.
- Apply to each ACO a benchmark which is the higher of either a benchmark based on the ACO's historical costs or a benchmark based on regional costs. Alternatively, a commenter suggested rewarding ACOs that beat either of two benchmarks, one based on the ACO's historical cost experience and one based on the ACO's regional costs.
- Adopt the Medicare Advantage methodology for paying plans based on a monthly per capita county rate in creating ACO benchmarks, particularly for ACOs in low cost counties. Specifically for ACOs in the lowest quartile of costs, apply a benchmark that is 115 percent of estimated FFS costs, and allow for double bonuses if quality benchmarks are achieved.
- Adopt an alternative benchmarking methodology for ACOs under prospective assignment. For example, the benchmark could be based on the historical costs of the specific beneficiaries that are assigned to the ACO for a performance year, rather than on the average costs of the ACO's historical patient population.
- Revise the approach to trending and updating the ACO's benchmark. Several commenters suggested segmenting and adjusting the benchmark by service mix (*e.g.,* expenditures by differing care settings), similar to the current approach for segmenting the benchmark by Medicare enrollment type. Another commenter suggested using actual trend data, as opposed to estimated (projected) trend data to establish and update the benchmark. A commenter suggested eliminating the benchmark update altogether.
- Address the effects of beneficiary churn on benchmarks, for instance by using additional historical data in establishing benchmarks or locking-in an ACO's assigned beneficiaries for multiple years.
- Normalize random fluctuations in FFS cost estimates for the ACO's assigned beneficiary population.
- Revisit the MSR calculation under Track 1 if moving to regional benchmarks, to see if the MSR could be lowered.

Some commenters supported blended approaches, whereby benchmarks would reflect a combination of the ACO's historical costs and regional, national or a combination of regional/national costs. For instance, a benchmark based on the ACO's historical costs and: (1) Only national FFS trend factors (as is currently done); (2) only regional FFS trend factors; or (3) a combination of both regional and national FFS trend factors. Others suggested that an ACO's benchmark be comprised of a blend of the costs for the ACO's assigned beneficiaries (historical costs) and either regional costs or regional/national costs. A few commenters addressed the weight regional and national costs should be given in relation to the ACO's historical costs in these blended approaches, and especially in the context of discussing the pace for transitioning ACOs to benchmarks based only on regional costs. Some commenters favored options that would allow ACOs (particularly those under the two-sided model) a choice of benchmarking methodology, such as benchmarks reflecting national FFS costs versus those reflective of regional costs.

Commenters offered differing suggestions on whether to broadly or narrowly apply a benchmarking methodology that accounts for regional costs across the program's tracks. Some commenters favored applying the same benchmarking methodology across program tracks, particularly to provide consistency in methodology as ACOs move between tracks (namely from Track 1 into a two-sided risk track). Others suggested using an alternative benchmarking methodology to create distinctions between the tracks, for instance applying the changes only in Tracks 2 and 3 to attract ACOs to performance-based risk. Some others recommended allowing ACOs under the two-sided model a choice of multiple benchmarking methodologies, including at least one option that accounts for regional costs, while other commenters suggested giving all ACOs this choice. If CMS adopts a revision to the benchmarking methodology, a commenter recommended that the changes become effective for all ACOs beginning with the first full performance year after the final rule is published.

Some commenters explained it would be premature for CMS to finalize any benchmarking changes at this time. Some commenters indicated there were insufficient details in the December 2014 proposed rule on the alternatives or cited their lack of data to analyze the alternatives discussed in order to make an informed and effective recommendation about the options. In particular, commenters pointed to the need for more details on the following:

- Definition of an ACO's region.
- Regional FFS data that would be used in incorporating regional factors into the benchmarking methodology.
- Risk adjustment.
- Adjustments for changes in ACO Participant TINs.
- Impact of these approaches on existing high and low cost providers as well as on existing ACOs according to their past performance in the program (for example, the potential impact of these changes on ACOs who have generated savings or losses).
- Disincentives for ACOs to include providers who manage the highest risk populations under a revised benchmarking methodology.
- Impact of regional or comparison population-based benchmarks on ACOs that include certain providers, such as critical access hospitals (CAHs) or academic medical centers.
- Budget neutrality of a revised benchmarking approach.

These commenters typically indicated the need for CMS to perform additional modeling and analytic work on the alternatives discussed in the proposed rule, and specifically the aforementioned issues. They urged CMS to share the results of this analysis and put forward detailed proposals on revisions to the benchmarking methodology through additional notice and comment rulemaking. A commenter further suggested that CMS convene a task force of CMS and ACO

representatives to evaluate and recommend benchmarking alternatives.

Response: We believe that the changes to the benchmark rebasing methodology we are finalizing in this final rule—equally weighting the benchmark years and accounting for savings generated in the ACO's first agreement period—will help to ensure that the Shared Savings Program remains attractive to ACOs, provides strong incentives for ACOs to improve the efficiency and quality of patient care, and generates savings for the Medicare Trust Funds. However, as we discussed in the December 2014 rule and as highlighted by many commenters, we continue to believe that additional changes to benchmark rebasing methodology are needed in order to ensure that the Shared Savings Program meets these goals over the long run. We agree with stakeholders that developing a benchmark rebasing methodology that incorporates regional cost factors into benchmarks is an important consideration in the development of the program, including for ensuring the sustained attractiveness of the program and for encouraging ACOs to achieve and maintain savings. In particular we believe that three main criteria should be used to evaluate a revised benchmarking methodology. Such a methodology should generate the following:

- Strong incentives for ACOs to improve efficiency and to continue participation in the program over the long term.
- Benchmarks which are sufficiently high to encourage ACOs to continue to meet the three-part aim, while also safeguarding the Medicare Trust Funds against the possibility that ACOs' reset benchmarks become overly inflated to the point where ACOs need to do little to maintain or change their care practices to generate savings.
- Generate benchmarks that reflect ACOs' actual costs in order to avoid potential selective participation by (and excessive shared payments to) ACOs with high benchmarks. In general, we believe that benchmarking approaches involve tradeoffs among these three criteria.

We believe that the current benchmark rebasing methodology does not achieve the best possible tradeoff among these criteria. While we believe that the modifications to the rebasing methodology we are finalizing in this final rule—equally weighting the benchmark years and accounting for savings generated in the ACO's first agreement period—will improve the extent to which the program's benchmarking methodology meets these criteria, we believe additional changes to the benchmark rebasing methodology are needed in order to ensure these goals are met over the long run.

However, we believe that the alternatives discussed in the December 2014 proposed rule, including an approach which would have based ACOs' future benchmarks entirely on regional FFS costs in the regions served by the ACO, may not strike the best balance among the considerations identified above. For instance, under approaches where an ACO's benchmark is no longer based directly on the ACO's own recent costs, the benchmark would less accurately match the ACO's underlying costs and increase the risk of selective participation. Therefore, we intend to propose a benchmarking methodology based on a blend of each ACO's recent cost experience and cost trends in its region. We intend to propose revisions to the program's benchmark rebasing methodology in a rule to be issued later this summer, as described in greater detail under the Final Action later in this section. While we received comments supporting quick adoption of changes to the benchmarking rebasing methodology to account for regional FFS costs, we are concerned that adopting changes in this final rule would provide short notice to ACOs that must determine whether to enter a second agreement period starting on January 1, 2016. For this reason we intend to propose that the revised benchmark rebasing methodology incorporating the ACO's historical costs and regional FFS costs and trends would apply to ACOs beginning new agreement periods in 2017 or later. ACOs beginning a new agreement period in 2016 would convert to the revised methodology at the start of their third agreement period in 2019.

We appreciate the comments and suggestions from stakeholders on the benchmarking alternatives discussed in the December 2014 proposed rule, and the specific suggestions on risk adjustment, reference population and service area definitions, how broadly or narrowly to incorporate an alternative benchmarking methodology into the program and the pace at which to make these changes, considerations related to ACO Participant List changes, and other factors that would need to be developed prior to adopting a benchmarking methodology that includes regional FFS costs. We recognize stakeholders' interest in participating in the development of policies for revising the benchmarking methodology, and in particular the importance of stakeholder feedback in considering the potential effects of, and unintended consequences resulting from, revisions to the benchmarking methodology. We will take the comments and suggestions we received in response to the discussion in the proposed rule into consideration when evaluating and developing the forthcoming policy proposals on an alternative benchmarking model.

Some of the suggestions commenters provided related to revising the program's benchmarking methodology are beyond the scope of the modifications proposed or sought comment on in December 2014 proposed rule, including suggestions for revising the program's existing risk adjustment methodology. We have limited experience with how this methodology affects ACO financial experience or influences the coding practices of ACOs, ACO participants and ACO providers/suppliers since at the time of this final rule we have final financial reconciliation results for only 1 performance year, for ACOs with 2012 and 2013 agreement start dates. As suggested by some commenters, we will continue to evaluate the current risk adjustment methodology. We will also continue to monitor the concerns raised by commenters about the possible effects of the existing risk adjustment methodology, including its impact on ACO financial performance, providers' coding practices and care for beneficiaries. Although at this time we believe revising the existing risk adjustment methodology is premature, we will continue to evaluate this issue, and will address any necessary refinements to the risk adjustment methodology in the forthcoming policy proposals on a benchmark rebasing model that incorporates regional FFS costs. In particular, we anticipate addressing the need for a risk adjustment methodology to account for coding differences between the ACO and its region.

FINAL ACTION: As described in section II.F.5.b. of this final rule, we are finalizing modifications to the benchmark rebasing methodology, to include equally weighting the ACO's historical benchmark years, and accounting for savings generated in the ACO's first agreement period when setting the ACO's benchmark for its second agreement period. Recognizing the importance of quickly moving to a benchmark rebasing approach that accounts for regional FFS costs and trends in addition to the ACO's historical costs and trends, we intend to propose and seek comment on the components of and procedures for calculating a regionally-trended rebased benchmark through a proposed rule to be issued later this summer. While the forthcoming proposed rule will provide

details of our considerations and preferred methodology, we believe it is important to signal our anticipated policy direction in this final rule. In particular, we anticipate this approach would include the following features:

• Continue to establish the ACO's historical benchmark for its first agreement period by calculating a historical benchmark based on the three most recent years prior to the start of the ACO's agreement period. We intend to discuss in the forthcoming proposed rule whether the appropriate weighting under the revised methodology is weighting the three benchmark years equally or following the current methodology of weighting at 10 percent for benchmark year (BY) 1, 30 percent for BY2, and 60 percent for BY3.

• For an ACO's second or subsequent agreement period, the benchmark would be rebased as a blend of a regionally-trended component and a rebased component, for instance—

++ *Regionally-trended component:* The ACO's historical costs calculated from the historical benchmark years for the 3 years preceding the ACO's first agreement period that starts in 2017 or later, adjusted by a regional trend factor based on changes in regional expenditures for each Medicare enrollment type (ESRD, disabled, aged/dual eligible, aged/non-dual eligible) for the most recent year prior to the start of the ACO's new agreement period, adjusted for changes in the health status and demographic factors of the population in each benchmark year relative to its region. The ACO's region would be defined relative to the areas where its assigned beneficiaries reside, for instance by using MSAs and regions constituting the non-MSA portions of the state; and

++ *Rebased component:* The ACO's recent historical expenditures, determined by calculating a historical benchmark according to the rebasing methodology established with this final rule—based on the 3 most recent years prior to the start of the ACO's new agreement period—including equally weighting these benchmark years but excluding the addition of a portion of savings generated over the same 3 most recent years.

An important consideration is the percentage each component accounts for in the rebased benchmark. We believe that placing a 70 percent weight on the regionally-trended component and a 30 percent weight on the rebased component would serve the goal of providing strong incentives for ACOs to achieve savings and to continue to participate in the Shared Savings Program. Further, we anticipate maintaining our existing policy for adjusting the ACO's historical benchmark whereby we annually account for changes to the ACO's participant list, based on the ACO participant list the ACO certifies before the start of the performance year for which these changes are effective. Specifically, changes in the ACO's certified participant list would result in a recalculation of both the regionally-trended component and rebased component of the ACO's benchmark.

We anticipate that the revised rebasing methodology would be used for the first time to set benchmarks for ACOs beginning new agreement periods in 2017. ACOs beginning new agreement periods in 2016 would convert to the revised methodology at the beginning of their next agreement period in 2019.

In the forthcoming proposed rule later this summer we will put forward details on this approach and address the following issues:

• Whether to make adjustments to account for ACOs whose costs are relatively high or low in relation to FFS trends in their region or the nation, such as specifying a smaller benchmark adjustment for high-spending ACOs.

• The percentage weight of the regionally-trended component and the rebased component, for instance 70 percent and 30 percent respectively; and whether to gradually reduce the weight placed on the regionally-trended component and reallocate this weight to a component based on regional average spending to transition ACOs to benchmarks based on regional FFS costs.

• How to refine the risk adjustment methodology to account for differences in the mix of beneficiaries assigned to the ACO and in the ACO's region; and how we might guard against excessive payments as ACOs improve documentation and coding of beneficiary conditions, such as by adjusting ACOs' risk scores for coding intensity or imposing limits on the extent to which an ACO's risk score can rise relative to its region.

• How to define an ACO's region, including considerations for using MSAs and rest of state designations, or Combined Statistical Areas (CSAs), or another definition of regionally-based statistical areas, or the ACO's county-level service area.

• How to account for changes in ACO Participant composition; for instance, similar to our existing method for adjusting the ACO's benchmark during the course of its agreement period to account for changes in its ACO participant list as described previously.

• Whether to incorporate regional FFS costs in updating an ACO's historical benchmark each performance year, or to maintain the current policy under which we update an ACO's benchmark based on the projected absolute amount of growth in national per capita expenditures for Parts A and B services under the original fee-for-service program. For instance, the update factor could be based on either regional costs or a blend of regional/national FFS costs, as well as continuing to account for changes during the performance period in health status and demographic factors of the ACO's assigned beneficiaries.

• How to safeguard against rewarding ACOs that increase their spending between now and the beginning of their next agreement period in order to lock in a higher benchmark for future agreement periods.

• How the revised benchmark rebasing methodology using ACO and regional cost trends fits in with the existing approach for establishing the ACO's historical benchmark for its first agreement period and the modifications to the rebasing methodology finalized in this final rule. We will consider whether additional adjustment is needed to transition ACOs to the revised rebasing methodology when they have been previously rebased under the methodology established with this final rule.

6. Technical Adjustments to the Benchmark and Performance Year Expenditures

When computing average per capita Medicare expenditures for an ACO during both the benchmark period and performance years under §§ 425.602, 425.604, and 425.606, we take into account all Parts A and B expenditures, including payments made under a demonstration, pilot or time limited program, with the exception of IME and DSH adjustments, which are excluded from these calculations. In the November 2011 final rule (76 FR 67919 through 67923), we considered whether to make adjustments to benchmark and performance year expenditures to exclude certain adjustments to Part A and B expenditures, including IME and DSH payments, geographic payment adjustments and some bonus payments and penalties. In the final rule, we acknowledged that taking into consideration payment changes could affect ACOs' financial performance and their ability to realize savings. However, with the exception of the adjustment to account for IME and DSH payments, we ultimately declined to make any adjustments to account for various

differences in payment rates among providers and suppliers.

While we exclude IME and DSH payments from the ACO's benchmark under our authority in section 1899(d)(1)(B)(ii) of the Act to make adjustment to the benchmark for such other factors as the Secretary determine appropriate, in order to make a similar exclusion from ACO performance year expenditures we must use our authority under section 1899(i)(3) of the Act. In the November 2011 final rule (76 FR 67921 through 67922), we stated that we believe excluding IME and DSH payments would be consistent with the requirements under section 1899(i)(3) of the Act. That is, excluding these payments from performance year expenditures would both improve the care for beneficiaries while also not resulting in greater payments to ACOs than would otherwise have been made if these payments were included. Specifically, we stated that removing IME and DSH payments from benchmark and performance year expenditures would allow us to more accurately reward actual decreases in unnecessary utilization of healthcare services, rather than decreases arising from changes in referral patterns. In addition, excluding these payments from our financial calculations would help to ensure participation in ACOs by hospitals that receive these payments. Taken in combination, these factors could result in Medicare beneficiaries receiving higher quality, better coordinated, and more cost-efficient care. As a result, we did not expect that excluding IME and DSH payments from the determination of ACOs' financial performance would result in greater payments to ACOs than would otherwise have been made. We also found that excluding these amounts was operationally feasible since they are included in separate fields on claims allowing them to be more easily excluded from financial calculations than certain other payments that are included on Part A and B claims. Therefore, we finalized a policy of excluding IME and DSH payments from both the benchmark and performance year expenditure calculations. We stated that we intended to monitor this issue and would revisit it if we determine that excluding these payments has resulted in additional program expenditures (76 FR 67922).

In addition to IME and DSH payments, we also considered whether standardizing payments to account for other types of payment adjustments would alleviate concerns resulting from changes in the Medicare payment systems. However, in light of the numerous payment adjustments included throughout the Medicare payment systems, we were concerned about the complexity resulting from standardizing payments and whether standardized payment information would provide meaningful and consistent feedback regarding ACO performance. Ultimately, we disagreed with commenters' suggestions that we adjust expenditures to account for various differences in cost and payment. We stated that making such extensive adjustments, or allowing for benchmark adjustments on a case-by-case basis, would create an inaccurate and inconsistent picture of ACO spending and may limit innovations in ACOs' redesign of care processes or cost reduction strategies (76 FR 67920).

Since the publication of the November 2011 final rule, some questions have persisted regarding the most appropriate way to handle payment differences and changes under Medicare FFS, including whether to take into consideration certain payment changes that could affect ACO financial performance. We did not propose to make any further adjustments to existing program policies in the December 2014 proposed rule, but we did seek further comment from stakeholders on the adjustment for IME and DSH payments and our decision not to make adjustments for other claims-based and non-claims based payments. In particular, we expressed our interest in comments regarding standardization of payments, including which elements to adjust for, the impact of value-based payment adjustments on payments to physicians and hospitals, and the value of providing feedback on non-standardized results while using standardized results to perform financial reconciliation.

Comment: Some commenters reiterated their support for the current program policy to exclude IME and DSH payments from ACO benchmark and performance year expenditures, but not to exclude other payments. A commenter explained that under the current policy ACOs are evaluated against their own previous period performance, and that any standardization or adjustment of expenditures is likely to limit the effectiveness of the program overall. The commenter further indicated that trying to account for one-time or intermittent payment adjustments may overcomplicate the program's financial calculations.

Many commenters favored removing the effect of all policy adjustments from benchmark and performance year expenditures, resulting in cost standardization for add-on payments and geographic payment differences. Commenters explained that this adjustment is necessary to reflect only actual resource utilization. Commenters explained their concern that absent these adjustments, financial calculations could reward ACOs for simply changing the setting of care, undermine certain types of providers, and place patients at risk for being steered away from appropriate, high-quality care.

Commenters recommended that we make the following adjustments:

- Remove adjustments associated with Medicare value-based payment programs such as the hospital value-based purchasing program (HVBP) and the hospital readmissions reduction program, and the physician value modifier. However, a commenter suggested that CMS further consider the impact of value-based payment adjustments on ACO benchmarks and financial reconciliation.
- Standardize rural payments. Several commenters suggested that CMS normalize cost-based payments to an average prospective payment system rate for calculations in all value programs, while a commenter suggested that medical expenses of rural physicians practicing in a geographic health professional shortage area be normalized to the Medicare FFS rate. Further, several commenters suggested that all special rural payments should be excluded from ACO benchmark and performance year expenditures, with a commenter itemizing these payments: Sole community hospital add-on, inpatient rehabilitation hospital add-ons, psychiatric hospital add-ons, ESRD low volume adjustment, frontier state hospital wage index floor, additional telehealth payments, floor on work geographic practice cost index (GPCI) and practice expense limits, hospital low volume adjustment, Medicare dependent hospital add-on, home health add-on and outpatient hold harmless payments.
- Exclude new technology payments under the Inpatient Prospective Payment System and pass through payment expenditures under the Outpatient Prospective Payment System. Commenters believe exclusion of these payments would avoid incentives for ACOs to underuse new technologies and therapies. Several commenters pointed to the exclusion of an IPPS new technology add-on payment from the spending total for an episode of care under the Bundled Payments for Care Improvement (BPCI) initiative as evidence of the need for these adjustments. Several commenters explained the need for CMS to monitor

patient access to innovative treatments. A commenter pointed to the need for additional patient protections against care stinting by providers pointing to analysis indicating an increase in the utilization of a lower cost procedure option and a decrease in utilization of a higher cost alternative procedure for patients served by ACOs. Several commenters noted CMS' role in fostering development of new technologies, with a commenter pointing to these exclusions as a means to encourage future development of life saving cancer treatments, and another commenter suggesting CMS incent ACOs to participate in clinical trials. Several commenters further pointed to the need for the program's quality measures and quality performance scoring to be more responsive to and better reward adoption of new technologies and treatments. A few commenters further suggested that CMS adopt a process whereby stakeholders would identify breakthrough technologies and treatments for payment or quality measurement adjustments.

• Modify the program regulations to include IME and DSH payments in the calculation of both benchmark and performance year expenditures. A commenter suggested that ACOs have the option to include or exclude IME and DSH payments, explaining that this flexibility would be crucial to address the unique circumstances faced by ACOs, relative to their assigned population and the care facilities within their service area.

Several comments reflected commenters' misunderstanding about the current methodology for calculating ACO benchmark and performance year expenditures by suggesting that we begin to exclude certain payments that fall outside of Part A and B claims in our calculations, including those payments we currently exclude. For example a commenter suggested we exclude direct graduate medical education (DGME) payments and EHR incentive payments for hospitals.

A commenter more generally explained the need for there to be direct correspondence between the benchmark and performance year expenditures to make sure that ACOs are assessed on true performance rather than on changes in payment methodology. However, a commenter suggested the need to allow for upward adjustments to ACO benchmarks in limited situations where significant statutory changes to Medicare payment policies are enacted.

Some commenters suggested other adjustments, including, for example, an adjustment to account for the transition from ICD–9 to ICD–10.

Response: We appreciate commenters' feedback about technical adjustments to benchmark and performance year expenditures. We agree with commenters who expressed support for the program's existing policies on these issues. We continue to believe that removing IME and DSH payments from benchmark and performance year expenditures allows us to more accurately reward actual decreases in unnecessary utilization of healthcare services, rather than decreases arising from changes in referral patterns. Therefore, we decline at this time to modify our existing policies, which exclude IME and DSH payments from benchmark and performance year expenditures. Further, we will continue to exclude payments that fall outside of Part A and B claims in calculating the benchmark and performance year expenditures, including, for example, DGME payments. We will also continue to take into account individual beneficiary identifiable payments made under a demonstration, pilot, or time limited program when calculating benchmark and performance year expenditures.

At this time, we are not persuaded by commenters' suggestions on the need to further adjust expenditures to account for various differences in cost and payment. We continue to believe that making extensive adjustments to remove the effect of all policy adjustments from benchmark and performance year expenditures, or allowing for expenditure adjustments on a case-by-case basis, would create an inaccurate and inconsistent picture of ACO spending and may limit innovations in ACOs' redesign of care processes or cost reduction strategies (see 76 FR 67920). Unlike the adjustments for IME and DSH payments, we continue to believe that the other payment adjustments that are made to Part A and B payments (such as geographic payment adjustments) do not result in a significant incentive to steer patients away from particular hospitals or providers since an ACO's financial performance would be compared to its own historical expenditure benchmark, as updated. Further, we believe it is important to look to lessons learned from Innovation Center initiatives, particularly the BPCI Model and other ACO models. The recently announced Next Generation ACO Model includes flexibility under the benchmarking methodology to adjust for legislative and regulatory changes enacted during the performance year which have a meaningful impact on expenditures. We will consider modifying program policies as lessons emerge from the Innovation Center initiatives. We intend to continue evaluating the need for technical adjustments to benchmark and performance year expenditures and may address these issues in future rulemaking.

Comment: Several commenters encouraged CMS to hold ACOs accountable for their assigned beneficiaries' Part D costs. Commenters urged CMS to make sure that all risk-bearing entities in the Medicare program compete on a level playing field, with commenters specifically recommending that CMS foster coordination between Part D plans and ACOs. Because ACOs are not at risk for Part D spending, there is little incentive for them to efficiently manage Part D prescription drug benefits for their enrollees, which could result in cost shifting from Medicare Part B to Part D plans. In contrast, MA–PDs and PDPs bear significant financial risk. To ensure that incentives are properly aligned, commenters recommend: (1) CMS should develop a Part D attribution payment model that rewards ACOs and Part D sponsors for savings generated in Part D; (2) the Part D Medical Loss Ratio rule should be revised to treat activities related to improving care and reducing costs for beneficiaries assigned to ACOs in the Shared Savings Program as quality improving activities; and (3) CMS should establish a process that allows interested parties to request that specific Part B drugs and their administration costs be excluded from the calculation of ACO expenditures. A commenter indicated the need for pharmacy network adequacy, particularly by risk-bearing ACOs.

Response: As we explained in the November 2011 final rule, we do not believe it is appropriate to consider Part D spending in our calculation of benchmark and performance year expenditures. The statute is clear in requiring that we take into account only payments made from the Medicare Trust Funds for Parts A and B services for assigned Medicare FFS beneficiaries, when computing average per capita Medicare expenditures under the ACO. Although commenters pointed out important concerns about the potential for inappropriate cost shifting to Part D, we continue to believe that the program's quality measurement and program monitoring activities will help us to prevent and detect any avoidance of at-risk beneficiaries or inappropriate cost shifting. Furthermore to the extent that lower cost drug therapies available under Part D are not the most appropriate course of treatment and lead

to subsequent visits or hospitalizations payable under Parts A and B, then any costs associated with not choosing the most appropriate treatment for the patient would be reflected in the ACO's per capita expenditures (76 FR 67920).

Comment: Some commenters suggested technical changes to how CMS calculates ACO costs. Several commenters recommended that actual ACO expenditures be based upon dates of service which end during the performance year (rather than begin during the performance year) to achieve the following objectives:

- More timely settlements by having a reduced run-out period.
- More accurate and reliable settlements since CMS uses a national average completion factor of 1.013 for all ACOs based on a 3-month run-out period.

The commenter explained that by calculating based on service end dates, a much lower completion factor would be necessary.

Several commenters provided alternative suggestions on how CMS truncates beneficiary costs under the Shared Savings Program. Several commenters expressed concern that the program's existing methodology for truncating beneficiary costs at the 99th percentile of national FFS is not sufficient protection for smaller ACOs specifically, and generally an insufficient incentive for ACOs to manage the costliest beneficiaries. Alternatively, commenters suggested CMS provide ACOs with several options of outlier caps to choose from based on their size, experience and preference. A commenter suggested the program's existing truncation methodology, where there is a separate threshold for each Medicare enrollment type, creates confusion for ACOs and is also a barrier for managing high-expenditure enrollees as ACOs may decide to not invest scarce resources in controlling costs where they will be unable to make an impact on the three-part aim. Alternatively, this commenter suggested CMS explore using a single, prospectively fixed, dollar cap for the Disabled, Aged/Dual, Aged/Non-Dual categories, but maintain a separate cap for the ESRD category. Another commenter suggested CMS exclude from benchmark calculations beneficiaries who received transplants, those with ESRD, and those with Medicaid long-stay nursing home expenses, and those with a single acute episode costing more than $100,000 in a year.

Response: The suggestions for technical adjustments to the program's benchmark and performance calculations are beyond the scope of the December 2014 proposed rule. We appreciate commenters' thoughtful input on these issues. However, we decline at this time to amend these policies through this final rule, and will continue to consider these issues for future rulemaking and policy development.

FINAL ACTION: We are not making additional technical adjustments to our current policy on calculation of benchmark and performance year expenditures, which takes account of all Parts A and B expenditures (including payments made under a demonstration, pilot or time limited program) with the exception of the adjustments for IME and DSH payments, as specified under §§ 425.602, 425.604, 425.606 and the newly established 425.610. However, we intend to continue to evaluate these issues and may revisit them in future rulemaking.

7. Ways To Encourage ACO Participation in Performance-Based Risk Arrangements

Under the current Medicare FFS system, providers have a financial incentive to increase their volume of services. As a result, many current Medicare regulations are designed to prevent overuse of services and the resulting increase in Medicare spending in this context. However, stakeholders such as MedPAC believe that moving ACOs to two-sided performance-based risk under the Shared Savings Program would provide strong incentives for organizations to control costs, which should, in turn, open up the opportunity for regulatory relief across a broad range of issues. Removing certain regulatory requirements may provide ACOs with additional flexibility to innovate further, which could in turn lead to even greater cost savings. These views are supported by analyses performed by CMS actuaries that suggest two-sided performance-based risk provides stronger incentives for ACOs to achieve savings. Thus, ACOs and MedPAC have encouraged us to consider relaxing certain specific FFS Medicare payment and other rules under two-sided performance based risk models in the Shared Savings Program.

Therefore, as discussed in detail in the proposed rule (79 FR 72815 through 72831) we considered what additional flexibilities could be offered to encourage ACO participation in performance-based risk arrangements, including waiving certain Medicare Program rules using our waiver authority under section 1899(f) of the Act, which permits the Secretary to waive ''such requirements of . . . title XVIII of this Act as may be necessary to carry out the provisions of this section.'' In order to waive FFS payment or other program rules, the waiver must be determined to be necessary for CMS to carry out the provisions of section 1899 of the Act, which governs the Shared Savings Program. In the proposed rule we stated that given the very limited ACO interest thus far in two-sided performance-based risk (to date only 5 of the ACOs participating in the Shared Savings Program have elected to participate under Track 2) and the comments and suggestions by stakeholders, we now believe that using the authority under section 1899(f) of the Act to waive certain payment or other program requirements may be necessary to carry out the provisions of the Shared Savings Program and to permit effective implementation of two-sided performance-based risk tracks under the program.

We noted in the proposed rule that while we were considering these waiver issues under the Shared Savings Program, we were also actively moving forward with testing certain payment rule and other waivers as part of models tested by the CMS Innovation Center under section 1115A of the Act, including the Pioneer ACO Model (see the CMS Web site at *http://innovation.cms.gov/initiatives/Pioneer-ACO-Model/*). For example, we have early information and data from our initial test of the waiver of the SNF 3-day rule under the Pioneer ACO Model, and we are in the process of testing beneficiary attestation under the Pioneer ACO Model.

In addition, we would note that the CMS Innovation Center also recently announced the new Next Generation ACO Model (see the CMS Web site at *http://innovation.cms.gov/initiatives/Next-Generation-ACO-Model/*). The goal of the Next Generation ACO Model is to test whether strong financial incentives for ACOs, coupled with tools to support better patient engagement and care management, can improve health outcomes and lower expenditures for Original Medicare fee-for-service (FFS) beneficiaries. Also central to the Next Generation ACO Model are several ''benefit enhancement'' tools to help ACOs improve engagement with beneficiaries, such as greater access to home visits, telehealth services, and skilled nursing facility services.

Finally, we also noted that it is possible that certain waivers of payment or program rules may only be appropriate under a model in which there is prospective assignment of beneficiaries, such as proposed Track 3. Under prospective assignment, beneficiaries would be assigned to the

ACO for the entire performance year, and it would thus be clear as to which beneficiaries the waiver applied. Having clarity as to whether a waiver applies to a particular beneficiary may be important for the ACO to comply with the conditions of the waiver and could also improve CMS' ability to monitor waivers for misuse.

As discussed in the sections that follow, we solicited comment on several options that would implicate the waiver authority under section 1899(f) of the Act and then considered other options that could be implemented independent of waiver authority. Although we did not specifically propose these options, we stated that we would consider the comments received regarding these options during the development of the final rule, and indicated that we might consider adopting one or more of these options in the final rule.

a. Payment Requirements and Other Program Requirements That May Need To Be Waived in Order To Carry Out the Shared Savings Program

In the proposed rule (79 FR 72816 through 72826), we discussed in detail a number of specific payment and program rules for which we believed waivers could be necessary under section 1899(f) of the Shared Savings Program statute to support ACOs' efforts to increase quality and decrease costs under two-sided performance-based risk arrangements, and on which we invited comments, as discussed later in this section. The payment and program rules are as follows:

(1) SNF 3-Day Rule

The Medicare SNF benefit is for beneficiaries who require a short-term intensive stay in a SNF, requiring skilled nursing, or skilled rehabilitation care, or both. Pursuant to section 1861(i) of the Act, beneficiaries must have a prior inpatient hospital stay of no fewer than three consecutive days in order to be eligible for Medicare coverage of inpatient SNF care. MA plans may cover SNF care that is not preceded by a three day inpatient hospital stay; we believe this is appropriate because of the financial incentives for MA plans, which operate under a capitated payment arrangement, to control total cost of patient care. (See the discussion of this Medicare Advantage waiver of the three day qualifying inpatient hospital stay on the CMS Web site at *http://www.cms.gov/Medicare/Health-Plans/MedicareAdvtgSpecRateStats/Downloads/Announcement2016.pdf*, page 142.)

The Pioneer ACO Model has recently started testing whether a tailored waiver of the SNF 3-day rule will enable the Pioneer ACOs to improve the quality of care for a subset of beneficiaries requiring skilled nursing, or skilled rehabilitation care, or both while also reducing expenditures. ACOs under the Pioneer ACO Model are accountable for the total costs of care furnished to their assigned beneficiary population, and must accept performance-based risk in the event that costs exceed their benchmark. This type of performance-based risk arrangement has the potential to mitigate the incentive to overuse SNF benefits.

(2) Billing and Payment for Telehealth Services

Under section 1834(m) of the Act, Medicare pays for telehealth services furnished by a physician or practitioner under certain conditions even though the physician or practitioner is not in the same location as the beneficiary. Generally, for Medicare payment to be made for telehealth services under the Physician Fee Schedule several conditions must be met. The services must be on the Medicare list of telehealth services and meet all of the following other requirements for payment:

- The service must be furnished via an interactive telecommunications system.
- The service must be furnished to an eligible telehealth individual.
- The individual receiving the services must be in an eligible originating site.

When all of these conditions are met, Medicare pays a facility fee to the originating site and provides separate payment to the distant site practitioner for the service. While certain professional services that are commonly furnished remotely using telecommunications technology are paid under the same conditions as in-person physicians' services, and thus do not require a waiver, ACOs and other commenters have suggested that a waiver of certain Medicare telemedicine payment requirements would help encourage a broader range of ACOs to more fully utilize telehealth, remote patient monitoring, and other such enabling technologies.

(3) Homebound Requirement Under the Home Health Benefit

In order for Medicare to pay for home health services, a beneficiary must be determined to be ''home-bound.'' Specifically, sections 1835(a) and 1814(a) of the Act require that a physician certify (and recertify) that in the case of home health services under the Medicare home health benefit, such services are or were required because the individual is or was ''confined to the home'' and needs or needed skilled nursing care on an intermittent basis, or physical or speech therapy or has or had a continuing need for occupational therapy. A beneficiary is considered to be confined to the home if the beneficiary has a condition, due to an illness or injury, that restricts his or her ability to leave home except with the assistance of another individual or the aid of a supportive device (such as crutches, a cane, a wheelchair, or a walker), or if the beneficiary has a condition such that leaving his or her home is medically contraindicated. While a beneficiary does not have to be bedridden to be considered confined to the home, the condition of the beneficiary must be such that there exists a normal inability to leave home and leaving home requires a considerable and taxing effort by the beneficiary. Absent this condition, it would be expected that the beneficiary could typically get the same services in an outpatient or other setting. Thus, the homebound requirement provides a way to help differentiate between patients that require medical care at home versus patients who could more appropriately receive care in a less costly outpatient setting.

Some ACOs and others have suggested that a waiver of this requirement would be appropriate under the Shared Savings Program, especially for ACOs that have elected to participate under a two-sided performance-based risk arrangement. They suggested that home health care would be appropriate for additional beneficiaries and could result in lower overall costs of care in some instances. For example, some had suggested, based on their experiences outside of the Medicare FFS program, that if a beneficiary is allowed to have home health care visits, even if the beneficiary is not considered home-bound, the beneficiary may avoid a hospital admission.

(4) Waivers for Referrals to Post-Acute Care Settings

As a condition of participation (CoP) in Medicare, a hospital must have in effect a discharge planning process that applies to all patients, as required under § 482.43. The Interpretative Guidelines for this requirement found in the State Operations Manual, Publication 100–07, Appendix A—Survey Protocol, Regulations and Interpretive Guidelines for Hospitals, section A–0799, define hospital discharge planning as a process that involves determining the appropriate post-hospital discharge

destination for a patient; identifying what the patient requires for a smooth and safe transition from the hospital to his or her discharge destination; and beginning the process of meeting the patient's identified post-discharge needs. The discharge planning CoP requires the hospital to develop a discharge planning evaluation at the patient's request and to discuss the evaluation and plan with the patient and actively involve patients or their representatives throughout the discharge planning process. When applicable, the hospital must include in the discharge plan a list of home health agencies (HHAs) or SNFs that are available to the patient, that are participating in the Medicare program and that serve the geographic area (as defined by the HHA) in which the patient resides or, in the case of a SNF, in the geographic area requested by the patient. During the discharge planning process the hospital must inform the patient or the patient's family of their freedom to choose among Medicare-participating post-hospital providers and must not direct the patient to specific provider(s) or otherwise limit which qualified providers the patient may choose among. When the patient or the patient's family has expressed a preference, the hospital must attempt to arrange post-hospital care with an HHA or SNF, as applicable, consistent with that preference. If the hospital is unable to make the preferred arrangement (for example, if there is no bed available in the preferred SNF), it must document the reason the patient's preference could not be fulfilled and explain that reason to the patient.

ACOs and MedPAC have indicated that as ACOs have started to analyze claims data on their beneficiaries, they are recognizing that certain providers may deliver higher-quality and lower-cost care than others. ACOs have indicated that they would like to have the ability to recommend high-quality SNF and HHA providers with whom they have established relationships, rather than presenting all options equally. ACOs have asked that we provide clear direction on how preferred providers can be presented to beneficiaries and what represents clear notification of the beneficiary's freedom to choose among participating Medicare providers.

(5) Solicitation of Comments on Specific Waiver Options

In the December 2014 proposed rule, although we did not propose changes to our program rules that would implicate waivers of payment and other program rules, we sought comments on the following specific waivers of payment and other program rules that would implicate the waiver authority under section 1899(f) of the Act:

- SNF 3-Day Rule. We sought comment (79 FR 72817 through 72820) on whether a waiver of the 3-day SNF rule was necessary for purposes of implementing two-sided performance based risk models under the Shared Savings Program. We indicated that if we were to make such a waiver available in the Shared Savings Program then initially it would likely be made available only to ACOs in Track 3 for their prospective assigned beneficiary population. We indicated that we would likely offer ACOs the opportunity to apply for such a waiver using a framework similar to the one currently developed under the Pioneer ACO Model, with appropriate revisions as necessary to accommodate the differences in beneficiary assignment methodology. However, we sought comment on whether such a waiver should apply to all performance-based risk tracks and considered options for identifying eligible beneficiaries under a retrospective assignment methodology. We indicated that under any such waiver ACOs would be required to submit to CMS for approval of a SNF or group of SNFs with which they wish to partner. In addition, we stated that we believed it would be appropriate to limit such a waiver to SNFs that are ACO participants or ACO providers/suppliers because these entities would have incentives that are most directly aligned with those of the ACO.
- Billing and Payment for Telehealth Services. We sought comment (79 FR 72820 through 72822) on an option that would waive the originating site requirements of section 1834(m)(4)(C)(i)(I) through (III) of the Act that limit telehealth payment to services furnished within specific types of geographic areas or in an entity participating in a federal telemedicine demonstration project approved as of December 31, 2000. We also sought comment on an option that would provide a waiver of the originating site requirements of section 1834(m)(4)(C)(ii)(I) through (VIII) of the Act that specify the particular sites at which the eligible telehealth individual must be located at the time the service is furnished via a telecommunications system. We indicated that any such a waiver would likely be limited for use by Track 3 ACOs for their prospectively assigned beneficiaries. We sought comments on whether it is necessary to use the waiver authority under section 1899(f) to allow ACOs additional flexibility to provide a more extensive set of telehealth services or services in a broader range of geographic areas and a number of factors related to the scope of any such waiver.
- Homebound Requirement Under the Home Health Benefit. We sought comment (79 FR 72822 through 72823) on whether a waiver of the homebound requirement under section 1899(f) of the Act is necessary in order to carry out the Shared Savings Program. Specifically, we sought comment on an option that would offer an ACO participating under Track 3 the opportunity to provide home health services to non-home bound beneficiaries that are prospectively assigned to the ACO, and requested additional comment on related implementation issues. We indicated that to help ensure that the waiver is used appropriately, we would require that home health services provided pursuant to the waiver be at the direction of an ACO provider/supplier that is not a home health agency. We also noted that the home health agency would likely be required to be an ACO provider/supplier. However, in any case, the ACO would be required to submit to CMS the home health agency or group of home health agencies with which it wishes to partner in providing services pursuant to this waiver.
- Referrals to Post-acute Care Settings. We sought comment (79 FR 72823 through 72826) on whether it is necessary to waive the requirement under section 1861(ee)(2)(H) of the Act that a hospital ''not specify or otherwise limit the qualified provider which may provide post-hospital home services'' and the portions of the hospital discharge planning CoP at 42 CFR 482.43 that implement this requirement, using our waiver authority under section 1899(f) of the Act for ACOs participating in two-sided risk tracks under the Shared Savings Program. We indicated that if we were to implement such a waiver, we would likely limit the use of the waiver to beneficiaries prospectively assigned to ACOs participating under Track 3. We also noted that we believed it would be appropriate to limit such a waiver to hospitals that are ACO participants or ACO providers/suppliers because these entities would have incentives that are most directly aligned with those of the ACO. We stated that under a waiver of the prohibition on the specification of qualified providers, discharge planners in hospitals that are ACO participants or ACO providers/suppliers would have the flexibility to recommend high quality post-acute providers with whom they have relationships (either financial, or clinical, or both) for the purpose of

improving continuity of care across sites of care.

• Waiver of Other Payment Rules. In the proposed rule (79 FR 72826), we also welcomed suggestions on whether there are any additional Medicare FFS payment rules that it may be necessary to waive using our authority under section 1899(f) of the Act in order to effectively implement two-sided risk financial arrangements under the Shared Savings Program by providing additional mechanisms for ACOs to increase quality and decrease costs. We indicated that we would establish any such waivers through the rulemaking process.

Comments: A majority of commenters supported all four waivers. Most commenters supported applying these waivers very broadly to all tracks and all FFS patients receiving services from ACO participants and ACO providers/suppliers, stating that waiver of payment requirements and other regulations is necessary for ACOs in all tracks to optimally coordinate care and reduce costs. These commenters generally believe that ACOs participating in each track can produce savings for CMS and improve value and quality for Medicare beneficiaries. Therefore, they recommended that ACOs participating under all 3 tracks should have an opportunity to apply for these four potential payment and program requirement waivers. Under this approach, the determination of whether an organization can appropriately use these waivers would be based on the strength of an ACO's waiver application and past performance, not its risk track. Some commenters believe that these waivers should be available not only to assigned beneficiaries but rather to all beneficiaries who have had at least one primary care service from an ACO provider/supplier. Some commenters suggested that for quality control, CMS could use a screening mechanism (for example, the application process) and ongoing monitoring of all ACOs participating in waivers to ensure participating ACOs are able to fulfill the requirements for the waivers.

A few commenters disagreed that the waivers offered any additional incentive to move to two-sided risk because ACOs have demonstrated they can improve quality and reduce costs without them. A few commenters expressed concerns that incorporating such waivers in FFS Medicare without providing the same flexibilities for MA plans could create inappropriate incentives for MA plans to leave and become ACOs or for providers that contract with MA plans to leave such plans and instead join or form ACOs. MedPAC and several others agreed that regulatory relief should be incorporated into the Shared Savings Program, but that the waivers should be limited to Track 3 or only applied when there is prospective assignment of beneficiaries or both so that CMS may process claims appropriately and provide oversight of their use. Other commenters also expressed concern with applying the waivers beyond Track 3, stating they believed that doing so would create a disincentive for ACOs to accept additional risk. Some commenters supported the waivers but cautioned that additional protections should be incorporated to guard against stinting of care. At least a commenter suggested limiting waiver use to ACOs that choose two-sided risk after having successfully completed at least one agreement period under Track 1.

More specific comments related to each waiver option for which we sought comment are as follows:

• SNF 3-Day Waiver: A majority of commenters supported a waiver of the SNF 3-day rule. In contrast, several commenters strongly opposed use of a SNF 3-day waiver for any ACO, regardless of track or criteria. Some stated that they believe Shared Savings Program ACOs have the potential to endanger patients' health outcomes and that ACOs lack adequate oversight and the waiver options include insufficient protections for beneficiaries. Some stated they viewed the discussion of a potential waiver of the SNF 3-day rule as driven by a governmental attempt to save money at the expense of beneficiary choice and quality of care. Some expressed concern that such a waiver would inappropriately incentivize migration of care to SNFs over other post-acute options, or that costs would be shifted to the Medicaid program because patients could be referred to SNFs preferentially over IRFs and become long-stay residents. Some recommended a cautious and incremental approach to the application of such a waiver, and recommended that CMS gather evidence from testing prior to incorporating it in the Shared Savings Program.

Some commented on criteria for use of the waiver, such as requiring an ACO physician's signature for admission to a SNF and aligning the waiver criteria with those established for the Pioneer ACO Model, under which the patient must be medically stable, not require an inpatient evaluation or treatment and have a skilled nursing or rehabilitation need that could not be provided as an outpatient. Some commenters suggested that we should allow a waiver of the 3-day SNF rule only for patients with certain highly prevalent, high-cost chronic conditions. At least one commenter believes the criteria used under the Pioneer ACO Model are not strong enough independently, or together, to ensure high quality of care for SNF patients assigned to ACOs using the waiver. Commenters suggested that we should closely monitor waiver use and rescind the waivers ''for cause.'' Most commenters generally agreed that waivers should only be granted to SNFs that are ACO participants or ACO providers/suppliers, although a few opposed this limitation, stating that limiting the waiver to some subset of SNFs could limit patient access, particularly in rural areas, and override patient preference or choice.

In addition, several made comments about SNF quality of care. For example, some commenters supported requiring SNFs to have a quality rating of 3 or more stars under the CMS 5 Star Quality Rating System, as reported on the Nursing Home Compare Web site in order to participate in the use of a waiver. Some commenters suggested that the quality criteria should apply more broadly; that is, SNFs should be required to earn a 3-star rating in order to be an ACO provider/supplier.

However, other commenters believe that earning a 3-star rating is insufficient evidence of a SNF's readiness to treat patients that are admitted pursuant to a waiver and cited a recent New York Times article and OIG report. At least one commenter suggested that SNFs be required to have at least a 4-star rating in order to be eligible to receive patients pursuant to a waiver. Some commenters recommended that a 3-star rating should be required not only for the SNF's overall rating but should also apply to each composite rating.

• Telehealth Waiver: Most commenters supported a telehealth waiver that would remove geographic and originating site requirements for ACOs participating in all tracks or all two-sided risk tracks. Some commenters believe we should consider allowing all ACOs (including Pioneer ACOs) to apply for a waiver to bill for telehealth services for any patient. In particular, high-risk, frail patients may benefit from such a waiver if they are unable to get to a physician office in a timely manner. Some patients, who may be reluctant to make an appointment for a simple problem because of scheduling conflicts, leave their medical condition unchecked, often leading to more serious health issues. For these patients, the commenters believe the convenience of telehealth may encourage them to seek advice from their medical care team for non-emergent medical

conditions, potentially avoiding unnecessary use of the emergency room. The commenters believe use of telehealth has been demonstrated to be beneficial for patients who have certain chronic diseases (COPD and CHF) where minor daily changes in their health status can trigger an exacerbation and subsequent hospitalization. Commenters varied considerably as to the services that they believe should be included within the definition and scope of a telehealth waiver. For example, some commenters were supportive of waiving requirements regarding originating site, or geographic areas, or both for currently billable services whereas other commenters suggested waivers that would cover a broader range of additional services such as including the use of bi-directional audio/video, physiologic and behavioral monitoring, ''engagement prompts,'' remote monitoring, store and forward technologies, and point-of-care testing.

Some commenters suggested a phase-in or pilot testing of a telehealth waiver to assist with implementation and application to all tracks. Some commenters suggested a phase-in of additional telehealth flexibility, including remote patient monitoring, for ACOs based on their level of financial risk and ''beneficiary management.'' Some commenters suggested that CMS should use its waiver authority to allow ACOs to define the specific technologies, conditions, and services that they would use in the provision of care and CMS would then evaluate which services improved care delivery efficiency and quality. This phased approach would also allow newer ACOs to learn from the experience of the more advanced ACOs that are bearing greater financial risk. To limit new spending under the waiver, some commenters suggested that CMS could control the scope of the waiver by applying it only to telehealth services for a limited set of conditions; these conditions could encompass chronic conditions, such as diabetes, chronic obstructive pulmonary disease, and congestive heart failure, as well as more acute post-operative conditions including overall health, pain, fever, incision appearance, activity level, and any patient post-operative concerns. The commenters believe limiting the scope of the waiver would allow CMS to test the effects of the use of telehealth services and remote patient monitoring in these critical populations, while ensuring that the policy is well-defined. Some commenters also believe that those who provide telemedicine services must abide by certain standards of care, and that these standards must be part of the waiver requirements. Some commenters oppose any monitoring or requirements that would increase the reporting burden of the ACO.

Some commenters noted that there are times when telehealth may not be appropriate–for example, when there is a cognitive impairment, when diagnostic testing is needed, when the condition is severe, when a hands-on examination is needed, or if there is an uncertain diagnosis. A few commenters expressed concern about whether the expansion of the use of telehealth services within the Shared Savings Program may lead to inappropriate utilization through the 340B drug discount program in the absence of more detailed guidance on the interaction of the two initiatives. These commenters requested that CMS work with the Health Resources and Services Administration (HRSA), which administers the 340B program, to affirm that it is not our intention for the receipt of telehealth services within the context of the Shared Savings Program to, in and of itself, qualify a beneficiary as a patient of 340B covered entity. These commenters are concerned that without such a clarification and necessary oversight in place, patients may be unduly encouraged to seek telehealth services even when in-person services are available and more appropriate.

- Homebound Requirement Waiver: Most commenters supported a waiver of the homebound requirement for all tracks. Some of these commenters acknowledge there is a possibility that home health utilization increases could exceed the corresponding savings from lower inpatient utilization. However, the commenters believe the potential improvements in care and outcomes across all participants as a result of this waiver far outweigh the remote risks to the Medicare Trust Fund. Some strongly recommended a phase-in approach or prior pilot testing before offering such a waiver to all tracks. For example, some commenters recommended that CMS should test and measure the impact of this waiver with qualified Track 1 ACOs and that CMS should implement this waiver immediately for Track 2 and Track 3 ACOs, because Track 2 and Track 3 ACOs are already adequately incentivized to manage cost and quality. A few commenters were strongly in opposition to implementing a waiver of the homebound requirement, stating that the homebound requirement is necessary to avoid abuse and overuse of home health services. Some commenters agreed that there is benefit to the home health agency being an ACO participant or ACO provider/supplier and that the home health agency should be required to have a 3-star quality rating (or better), whereas other commenters opposed these requirements. Some commenters, for example, believe that ACOs should have the flexibility to determine which partners, participants, and vendors it believes best fit within its integration of care as it is at financial risk in such decisions. Some commenters believe the Home Health star rating system requires further refinement and that the Home Health star ratings require appropriate risk-adjustment.
- Post-Acute Referral Waiver: Support for the waiver for post-acute referrals was more mixed than for the other waivers. For those that supported this waiver, most would support a waiver for all tracks. These commenters believe a waiver would allow participants to provide informed recommendations to patients without limiting choice and without increasing utilization. They further suggest that ACOs in all tracks already have adequate incentives to ensure patients receive care from the highest quality, most efficient providers in the market. Some of the commenters that supported such a waiver believe that the waiver should be limited to hospitals that are ACO participants or ACO providers/suppliers, that any recommended post-acute care provider meet certain quality criteria, and that the ACO provide a brief written description in its waiver application describing how it would use the waiver to meet the clinical needs of its assigned patients.

Some expressed support for such a waiver only if additional conditions apply, such as including a requirement that patients should be notified in advance that providers and suppliers participating in an ACO may direct patients to certain pre-identified post-acute care providers. These commenters believe that CMS must closely monitor the use of the waiver to ensure beneficiaries maintain full freedom of choice.

Some commenters were strongly opposed to or expressed strong concerns about waiving the post-acute care requirements. Some strongly oppose allowing hospitals to refer patients solely to providers with which they have financial relationships. These commenters believe that such a waiver would infringe on the right of beneficiaries to choose the best provider for their needs or undermine patient selection of high quality post-acute care providers. Some expressed concern that patients would be inappropriately steered toward SNFs in lieu of IRFs, even when IRFs are available in the geographic area and are the most

medically appropriate post-acute setting for the patient, solely because their charges to the Medicare program are higher than SNF' charges. Some commenters requested a clarification that the waiver applies to ACOs and not just hospitals, since some ACOs do not include any hospitals as participants.

• Other Payment Rule Waiver Suggestions: Commenters suggested many other payment rules that they believed we should consider for a waiver, such as the following:

++ Waiving the two-midnight inpatient admission criteria.

++ Relief from RAC audits.

++ Waiving the face-to-face home health requirement.

++ Waiving hospice rules to permit ACOs to enroll individuals in hospice even if they are receiving curative treatment.

++ Waivers that would permit non-physician practitioners to certify patients for home health services.

++ Waiving the intermittent care requirement so that patients requiring intermittent care would not be ''forced to receive care from a skilled nursing facility'' but instead could receive home health care, if appropriate.

++ Waiving rules to permit home health agencies to perform pre- and post-operative assessments.

++ Waiving certain Shared Savings Program rules such as the requirement that a physician visit is a prerequisite for assignment.

++ Waiving FFS payment rules to compensate ACO providers for currently unfunded activities such as care manager services, paramedic evaluations, or services provided by community health workers.

Response: We appreciate the many thoughtful suggestions, which will be helpful to us in developing any future proposals regarding the waiver of any Medicare FFS rules that might be necessary to carry out the Shared Savings Program, and in particular to implement two-sided risk models under the program. We agree with commenters who believe that waivers of certain FFS payment rules and other requirements could be a beneficial addition to the Shared Savings Program.

However, in order to waive a statutory requirement using the waiver authority under section 1899(f) of the Act, the waiver must be necessary in order to carry out the provisions of section 1899 of the Act. With the exception of the waiver of the SNF 3-day rule, we need additional time to assess whether any of the waivers discussed in the proposed rule or suggested by commenters are necessary for the operation of the Shared Savings Program. We intend to consider this issue further and will carefully examine lessons learned regarding the waivers that are being tested as part of Innovation Center models and in the event that we determine that additional waivers are necessary to carry out the Shared Savings Program, we will propose them in future rulemaking.

As noted previously, we are encouraged by the robust participation of organizations under the one-sided model of the Shared Savings Program. However, we continue to believe that the long term effectiveness and sustainability of the program depend on encouraging ACOs to progress along the performance-based risk continuum. Given the limited ACO interest thus far in two-sided performance-based risk, and the comments and suggestions by stakeholders, we believe that use of the authority under section 1899(f) of the Act to waive certain payment or other program requirements is necessary to carry out the provisions of the Shared Savings Program and to permit effective implementation of two-sided performance-based risk tracks under the program. As discussed previously in the April 2011 and December 2014 proposed rules, both we and many commenters believe that models where ACOs bear a degree of financial risk hold the potential to induce more meaningful systematic change than one-sided models. We believe that ACOs that bear financial risk would have a heightened incentive to restrain wasteful spending by their ACO participants and ACO providers/suppliers. This, in turn, may reduce the likelihood of over-utilization. In these circumstances, we believe that it is necessary to use our authority under section 1899(f) to waive the SNF 3-day rule under section 1861(i) of the Act in order to carry out the provisions of section 1899 of the Act by offering ACOs that have accepted two-sided risk under the Shared Savings Program more flexibility under FFS Medicare to provide appropriate care for beneficiaries in the most appropriate care setting.

Because we believe a waiver of the SNF 3-day rule under section 1899(f) of the Act is necessary in order to carry out the Shared Savings Program, and because we have already developed key program details through the Pioneer ACO Model that can be readily adopted under the Shared Savings Program, in this final rule we are providing for a waiver under part 425 of the SNF 3-day rule for certain SNF services furnished to eligible beneficiaries that are prospectively assigned to ACOs that participate in Track 3. An ACO's use of the 3-day SNF rule waiver will be associated with a distinct and easily identified event (admission of a prospectively assigned beneficiary to a SNF without prior hospitalization or after an inpatient hospitalization of fewer than 3 days). This waiver under part 425 will be effective for services furnished on or after January 1, 2017. This timeline will allow for development of additional subregulatory guidance, including necessary education and outreach for ACOs, ACO participants, ACO providers/suppliers and SNFs. At this time we are limiting the waiver to ACOs in Track 3 because under the prospective assignment methodology used in Track 3, beneficiaries will be assigned to the ACO for the entire performance year, and it will be clearer to the ACO as to which beneficiaries the waiver applies than it would be to an ACO in Track 1 or 2 under preliminary prospective assignment. We believe that having clarity as to whether the waiver would apply to SNF services furnished to a particular beneficiary is important to allow the ACO to comply with the conditions of the waiver and could also improve our ability to monitor waivers for misuse.

We are including the program requirements for this waiver of the SNF 3-day rule under the Shared Savings Program in a new provision that we are adding at § 425.612 of the regulations. We are not only adopting specific program requirements for the SNF 3-day rule waiver, but also more general requirements that will apply to all payment and program rule waivers under the Shared Savings Program. These requirements are primarily based on the program criteria previously developed under the Pioneer ACO Model. Specifically, we are waiving the requirement in section 1861(i) of the Act for a 3-day inpatient hospital stay prior to a Medicare covered post-hospital extended care service for eligible beneficiaries prospectively assigned to ACOs participating in Track 3 that receive otherwise covered post-hospital extended care services furnished by an eligible SNF that has entered into a written agreement to partner with the ACO for purposes of this waiver. All other provisions of the statute and regulations regarding Medicare Part A post-hospital extended care services continue to apply. We would emphasize that under this waiver CMS is not expanding Medicare SNF coverage to patients who could be treated in outpatient settings or who require long term custodial care. Through this waiver CMS is not creating a new benefit, but

instead we are providing ACOs participating in Track 3 with additional flexibility to increase quality and decrease costs. The SNF benefit itself will remain otherwise unchanged.

All ACOs electing to participate in Track 3 will be offered the opportunity to apply for a waiver of the SNF 3-day rule for their prospectively assigned beneficiaries at the time of their initial application to the program. In their request to use the waiver, ACOs must demonstrate that they have the capacity to identify and manage patients who would be either directly admitted to a SNF or admitted to a SNF after an inpatient hospitalization of fewer than 3 days. Specific criteria will be set forth in the materials for both initial applications and renewals under Track 3. CMS will provide further information regarding the application, process, including the application and specific requirements such as the deadline for submitting waiver requests, through subregulatory guidance and will also provide a feedback process to afford an opportunity for the applicant to clarify or revise its waiver request to meet the requirements. This waiver of the SNF 3-day rule under the Shared Savings Program under part 425 will be implemented consistently across all eligible ACOs. In other words, the waiver will be uniformly applied, and there will not be customization of the waiver or specific conditions for the waiver for particular eligible ACOs. CMS does not intend for ACOs to select SNFs on the basis of willingness to pay (or actual payment) for participation (for example ''pay to play''). We intend to monitor this issue and, if necessary, will modify the waiver to address any abuses in selection of SNFs in future rulemaking. At this time we are not requiring eligible ACOs to obtain a surety bond or other financial instrument to cover the costs of inappropriate SNF admissions, but we may consider adding such a requirement in future rulemaking.

The materials that must be submitted as part of the waiver request include but are not limited to the following:

- Narratives describing how the ACO plans to implement the waiver. For example, all eligible ACOs interested in applying for the SNF 3-day waiver will be required to provide an overview of how the care for patients admitted to a SNF pursuant to this waiver will be clinically integrated across sites and describe the system of care that will be implemented—including how the ACO will assess whether care is improving while decreasing cost growth. In addition all eligible ACOs interested in applying for the waiver will be required to describe how beneficiaries will be assessed, with input from the ACO medical director, to determine whether a SNF is the best site for admission (vs. acute care hospital or other post-acute care facility), including how they will determine that the beneficiary does not require the intensity of an acute care hospital admission, but does require the level of skilled nursing and rehabilitation care or both provided in a high performing SNF. More specifically, as part of the narratives describing how the ACO plans to implement the waiver, eligible ACOs will also be required to describe their: (1) Communication plan between ACO participants and the SNFs participating in the waiver; (2) care management plan for beneficiaries that are admitted to a SNF pursuant to this waiver; (3) beneficiary evaluation and admission plan, which must be approved by the ACO medical director and the healthcare professional responsible for the ACO's quality improvement and assurance program, that includes: The protocol that will be followed for evaluating and approving admissions to a SNF pursuant to the waiver and consistent with the beneficiary eligibility requirements described in the next paragraph; that provides for the ACO medical director or qualified healthcare professional to be available to respond to inquiries related to application of the waiver; and provides for education and training for eligible SNFs regarding waiver requirements, and (4) the financial relationship between the ACO, participating SNFs, and acute care hospitals. These requirements would be similar to the narratives that are already required as part of the application to participate in the Shared Savings Program to explain how ACOs will implement the required care processes under § 425.112. ACOs must then periodically evaluate and update these processes.
- A list of SNFs with whom the ACO will partner along with executed written agreements.
- Documentation demonstrating that the SNF has an overall quality rating of 3 or more stars under the CMS 5 Star Quality Rating System, as reported on the Nursing Home Compare Web site.

In order to be eligible to receive covered SNF services under the waiver, a beneficiary must meet the following requirements:

- Is prospectively assigned to the ACO for the performance year in which they have a SNF admission.
- Does not reside in a SNF or other long-term care setting.
- Is medically stable.
- Does not require inpatient or further inpatient hospital evaluation or treatment.
- Have certain and confirmed diagnoses.
- Have an identified skilled nursing or rehabilitation need that cannot be provided as an outpatient.
- Have been evaluated and approved for admission to the SNF within 3 days prior to the SNF admission by an ACO provider/supplier who is a physician, consistent with the beneficiary evaluation and admission plan.

To provide flexibility for ACOs, we are not requiring that SNFs be an ACO participant or ACO provider/supplier in order to be eligible to partner with an ACO for purposes of the waiver, although they must be Medicare-enrolled entities in good standing. We agree with some commenters who believe that limiting the waiver to SNFs that are ACO participants or ACO providers/suppliers could limit patient access, particularly in rural areas, and override patient preference or choice. Furthermore, under the Pioneer ACO Model, eligible SNFs are not required to be participating in the Pioneer ACO. However, we agree with commenters who believe that there should be strong evidence of collaboration between the ACO and SNF related to the objectives of the Shared Savings Program. Therefore, the following requirements apply in order for a SNF to be eligible to partner with ACOs for purposes of the waiver:

- Similar to the current requirement under the Pioneer ACO Model, for purposes of this waiver under part 425, an eligible SNF must have an overall quality rating of 3 or more stars under the CMS 5 Star Quality Rating System, as reported on the Nursing Home Compare Web site at the time of selection and must maintain that rating in order to continue to partner with an ACO for purposes of this waiver. We believe incorporating this requirement under the Shared Savings Program will provide beneficiaries with evidence that the SNF provides quality care.
- An eligible SNF must sign a written agreement with the ACO, which we will refer to as the ''SNF Affiliate Agreement'' that includes elements determined by CMS, including: A clear indication of the effective dates of the SNF affiliate agreement; agreement to comply with Shared Savings Program rules, including but not limited to those specified in the participation agreement; agreement to comply with and training on both the ACO's beneficiary evaluation and admission plan and the care management plan for beneficiaries that are admitted to a SNF pursuant to

this waiver; agreement to validate beneficiary eligibility for the waiver prior to admission; and remedial processes and penalties for inappropriate use of the waiver. The SNF Affiliate Agreement must include these elements in order to ensure that the SNF is able to determine prior to admission whether a beneficiary is prospectively assigned to the Track 3 ACO with which the SNF has an agreement and whether the admission has been ordered by an ACO provider/supplier who is a physician so that the SNF will know when it can appropriately bill for services furnished to an eligible beneficiary who does not have a 3-day inpatient stay.

• Eligible SNFs will be screened during the waiver application review process and periodically thereafter, with regard to their program integrity history, including any history of Medicare program exclusions or other sanctions and affiliations with individuals or entities that have a history of program integrity issues.

The waiver will be effective no earlier than January 1, 2017; thereafter, the waiver will be effective upon CMS notification of approval for the waiver or the start date of the participation agreement, whichever is later, and will not extend beyond the term of the ACO's participation agreement. If CMS terminates the participation agreement under § 425.218, then the waiver will end on the date of the notice of termination or on a later date to be determined by CMS in order avoid disrupting patient care or transitions. We believe that this additional flexibility to determine the end date is appropriate to provide us with an opportunity to address potential concerns about beneficiary liability for SNF services received after the date of the notice of termination. If the ACO terminates its participation agreement, then the waiver will end on the effective date of termination as specified in the written notification required under § 425.220.

ACOs with approved waivers will be required to post their use of the waivers, and will also be required to post a list of SNFs with which the ACO has a signed written SNF Affiliate Agreement for purposes of the waiver, as part of public reporting on their dedicated ACO Web page. We are revising § 425.308 to add this requirement at paragraph (b)(6).

Further, we will monitor and audit the use of such waivers under § 425.316. We anticipate implementing heightened monitoring of entities that bill under this payment rule waiver to help reduce the possibility for abuse of the waiver. We also intend to give heightened scrutiny to any marketing materials or activities by ACOs or by eligible SNFs that relate to services for which there may be an applicable waiver of the SNF 3-day rule to prevent coercive or misleading marketing. Additionally, we will require the ACO to continually monitor and evaluate its processes for assessing beneficiaries for admission to a SNF pursuant to the waiver, similar to the requirement under § 425.112 that ACOs evaluate and periodically update their required processes and patient-centeredness criteria.

We reserve the right to deny or revoke an ACO's participation in this waiver if the ACO, the ACO participants, the ACO providers/suppliers, or other individuals or entities (including SNFs) providing services to Medicare beneficiaries pursuant to this waiver are not in compliance with requirements under the Shared Savings Program, if the ACO does not use the waiver as described in its application, or if the ACO does not successfully meet the quality performance standard. We believe that the ACO's failure to meet the quality performance standard raises questions as to whether the ACO has the capacity to properly monitor the use of the waiver and to evaluate when beneficiaries are eligible for admission to a SNF under the terms of the waiver. We note that under § 425.304(b) we perform routine screening at the time of application and at other times during the ACO's agreement period. We reserve the right to deny participation in or revoke participation in this waiver if program integrity issues are uncovered as a result of the screening.

The waiver will not protect financial or other arrangements between or among ACOs, ACO participants, ACOs providers/suppliers, or other individuals or entities providing services to ACO patients from liability under the fraud and abuse laws or any other applicable laws. Additionally, this waiver only protects the submission of claims that meet all applicable requirements except the requirement for a prior 3-day inpatient stay. In other words, waivers are only granted for the regulatory exceptions expressly permitted under the waiver. No other applicable payment regulations are waived. Therefore, ACOs, ACO participants, ACO providers/suppliers and SNFs must comply with all applicable claims submission requirements.

We would also note that we will continue to evaluate the waiver of the SNF 3-day rule, including further lessons learned from Innovation Center models in which a waiver of the SNF 3-day rule is being tested. In the event that we determine that additional safeguards or protections for beneficiaries or other changes are necessary, such as to incorporate additional protections for beneficiaries into the participation agreement or SNF Affiliate Agreements, we will propose the necessary changes through future rulemaking.

However, regarding the other waivers of payment and program rules under part 425 discussed in the proposed rule, based on a review of the comments and experience gained thus far with ACO models, we continue to have concerns that immediately adopting untested or unproven waivers with which we have little experience on a national scale could lead to unintended consequences for the FFS beneficiaries we serve or for the health care system more broadly. There are many important details that must be designed and implemented to appropriately maintain beneficiary, provider and program protections under a waiver. Therefore, at this time we are not adopting any additional waivers under part 425 other than a waiver of the SNF 3-day rule. Instead, we expect to take a phased approach to the introduction of additional waivers with testing by the CMS Innovation Center prior to any decision as to whether it is appropriate to implement a particular waiver in the Shared Savings Program. More specifically, we expect to initially focus on further development of a waiver under part 425 of certain billing and payment requirements for telehealth services. We intend to offer such a waiver starting as early as in 2017, with specific requirements to be determined based on CMS' experience implementing such a waiver in the Next Generation ACO Model. We believe that providing ACOs that participate in the Shared Savings Program under two-sided performance based risk arrangements with additional flexibility to expand appropriate use of telehealth services has significant potential to improve patient care, improve communication between patients and their families and health care providers, support more timely treatment, and help to address barriers to access to care for some beneficiaries, such as those that require treatment or consultations with certain specialists. We believe that it may be necessary to use our authority under section 1899(f) of the Act to waive certain payment or other program requirements for telehealth services, for the same reasons that we have determined that a waiver of the SNF 3-Day Rule is necessary to carry out the Shared Savings Program in order to permit effective implementation of two-sided performance-based risk tracks

under the program. We believe that a waiver of certain telehealth-related rules under part 425 for ACOs participating under a two-sided risk model may be necessary in order to give ACO participants and ACO providers/suppliers more flexibility under FFS Medicare to provide appropriate and timely care for assigned beneficiaries. At this time, we anticipate that we would initially limit any waiver to ACOs in Track 3 because under the prospective assignment methodology used in Track 3, beneficiaries will be assigned to the ACO for the entire performance year, and it will be clearer to the ACO as to which beneficiaries the waiver applies than it would be to an ACO in Track 1 or 2 where beneficiaries are assigned using a preliminary prospective assignment methodology.

In regards to the concerns raised by some commenters regarding a possible interaction between a telehealth waiver and the 340B Drug Pricing Program, we note that we are aware that HRSA, which administers the 340B Drug Pricing Program, is currently considering issuing guidance on key areas in the 340B Program. If, in the future, we develop a proposal for a waiver of any telehealth payment rules within the Shared Savings Program, we intend to work closely with HRSA to address concerns about interactions between such a waiver under part 425 and HRSA programs, including the 340B Program.

We plan to test a waiver of certain telehealth payment rules as part of the Next Generation ACO Model being tested through the CMS Innovation Center. The benefit of this approach is that it will provide flexibility to permit testing of such a waiver prior to implementation of any waiver on a larger scale in the Shared Savings Program. Through such testing we frequently identify issues that neither we nor stakeholders had previously identified. Developing and implementing waivers in a test environment provides an opportunity for us to better understand the effects on providers, beneficiaries, and Medicare. Additionally, testing provides an opportunity to fine tune operations and to make any necessary modifications quickly to refine the waiver to address concerns, such as if the waiver implementation is determined to be too burdensome to ACOs or harmful to beneficiaries.

Comment: Commenters provided suggestions for waivers of certain fraud and abuse rules, or other rules including the following:

- A waiver that would allow ACOs to provide beneficiaries with incentives to receive services within the ACO, such as a waiver of some or all beneficiary ''co-pays'' or allowing ACOs to allocate a certain percentage of their shared savings directly to patients.
- A waiver that would allow ACOs to cover additional costs that they deem as being necessary for chronic care management, such as additional telehealth-related services, transportation, wheelchairs and other medical equipment, gym or wellness program memberships, heating or air conditioning, home improvements, including railing installation or other modifications to ease movement.

Response: Any waiver of fraud and abuse rules would be addressed by OIG and CMS separately from payment and program rule waivers. We recognize that in certain circumstances where there is no Medicare coverage for a particular item or service, some ACOs want to be able to offer additional beneficiary incentives that they deem as being necessary for chronic care management such as additional telehealth or other services suggested by commenters. We addressed these issues in our November 2011 final rule (see § 425.304(a)). Subject to compliance with all other applicable laws and regulations, an ACO, its ACO participants, its ACO providers/suppliers, or entities performing functions or services related to ACO activities may provide beneficiaries items or services for free or below fair market value if both of the following conditions are met:

- There is a reasonable connection between the items or services and the medical care of the beneficiary.
- The items or services are in-kind and either are preventive care items or services or advance one or more of the following clinical goals: Adherence to a treatment regime; adherence to a drug regime; adherence to a follow-up care plan; or management of a chronic disease or condition.

Also, the authority at section 1899(f) of the Act has been used by the Office of Inspector General and CMS to issue an interim final rule with comment period setting forth waivers of certain fraud and abuse authorities (''Waiver IFC''), which was published concurrently with the November 2011 final rule establishing the Shared Savings Program (76 FR 67992). On October 17, 2014, HHS published a continuation notice (79 FR 62356) to extend the effectiveness of the Waiver IFC for 1 year (that is, until November 2, 2015). The Waiver IFC, as may be modified or updated from time to time, addresses certain issues related to the provision of in-kind beneficiary incentives under § 425.304.

Comment: Some commenters stated that any waivers and related standards should be applied consistently across entities—in this case, all Shared Savings Program ACOs as well as MA plans that bear risk for the cost and quality of care. Regarding non-traditional benefits being offered to a subset of the ACO's population, a few commenters noted that there are situations where MA plans have wanted to offer benefits to members that would have improved their care experience, but have been unable to do so as a result of the supplemental benefits rules outlined in Chapter 4 of the Medicare Managed Care Manual. For example, one MA plan offers supplemental benefits such as transportation and home food delivery as part of care management programs but is bound by the supplemental benefits rules, which require uniformity, anti-discrimination and access (Chapter 4, Section 10.5 of the Medicare Managed Care Manual and 42 CFR 422.100(e)(2)). The commenter stated that it would be helpful if MA plans (and ACOs) could offer such supplemental benefits as part of a robust care management program, even if the program is targeted to the subset of the plan's population most likely to benefit from the services. In situations like this, the commenters believe that it is not the best use of resources to offer the benefits to the entire membership; rather, the additional benefits should be focused on those who could most benefit from these additional resources.

Response: We will further consider such issues as part of the development of any future proposals to waive payment or other program rules. As MA plans are governed by different statutory requirements, we would need to make a separate, independent determination as to whether it is either possible or appropriate to make any changes to the requirements governing supplemental benefits under the MA program.

Comment: A commenter requested that future consideration of waivers should go through the notice and comment and rulemaking process.

Response: We agree.

Comment: A commenter stated that ACOs would need assurance that they are legally protected for their use of such waivers of payment or program rules, which may require additional coordination between CMS and the Department of Health and Human Services Office of the Inspector General.

Response: We are unclear about the commenter's concern. We note that in developing the Shared Savings Program, and in response to stakeholder suggestions, we continue to work closely with agencies across the federal

government, including the HHS Office of the Inspector General. With respect to the commenter's concerns about legal protection for the use of waivers, any legal liability associated with the payment and program rule waivers under part 425 will depend on the particular facts and circumstances. Parties are encouraged to consult legal counsel as needed.

FINAL ACTION: We are adopting a new provision at § 425.612 of the regulations to provide for a waiver of the SNF 3-day rule for ACOs that participate in Track 3. Specifically, we will waive the requirement in section 1861(i) of the Act for a 3-day inpatient hospital stay prior to the provision of Medicare covered post-hospital extended care services for beneficiaries that are prospectively assigned to ACOs that participate in Track 3. We will refer to this waiver and any payment or program rule waivers we establish in the future under the Shared Savings Program as being waivers under part 425. The waiver of the SNF 3-day rule under part 425 will allow for Medicare payment for otherwise covered SNF services when ACO providers/suppliers participating in eligible Track 3 ACOs admit an eligible prospectively assigned beneficiary to an eligible SNF without a 3 day prior inpatient hospitalization. All other provisions of the statute and regulations regarding Medicare Part A post-hospital extended care services shall continue to apply. This waiver will be effective on or after January 1, 2017, and all ACOs participating under Track 3 or applying to participate under Track 3 will be eligible to apply for the waiver.

Currently, our regulations at § 425.10 state that the regulations under part 425 must not be construed to affect the payment, coverage, program integrity, and other requirements that apply to providers and suppliers under FFS Medicare. Because the SNF 3-Day waiver modified certain coverage determinations, we are making a conform changes to § 425.10 of the regulations to add ''except as permitted under section 1899(f) of the Act.'' For purposes of this waiver, an eligible ACO under the Shared Savings Program is an ACO that has elected to participate in Track 3 and has been approved by CMS as having demonstrated that it has the capacity to identify and manage patients who would be either directly admitted to a SNF or admitted to a SNF after an inpatient hospitalization of fewer than 3 days.

Finally, we will conduct further development and testing of other selected waivers through the CMS Innovation Center prior to deciding whether it is necessary to incorporate such waivers in the Shared Savings Program. We intend to initially focus on further development and testing of a waiver of the billing and payment requirements for telehealth services through the Next Generation ACO Model (see the CMS Web site at: *http://innovation.cms.gov/initiatives/Next-Generation-ACO-Model/*, page 22). We anticipate a telehealth waiver being available to ACOs no earlier than January 1, 2017, after notice and comment and rulemaking.

b. Other Options for Improving the Transition to Two-Sided Performance-Based Risk Arrangements

In the proposed rule, we also solicited comment on other options that could be implemented independent of waiver authority (79 FR 72826 through 72831) to support ACO efforts to increase quality and decrease costs under two-sided performance-based risk arrangements. They are as follows:

(1) Beneficiary Attestation

Under 1899(c) of the Act, beneficiaries are required to be assigned to an ACO participating in the Shared Savings Program based on the beneficiary's utilization of primary care services rendered by physicians participating in the ACO. Thus, beneficiary choice, as indicated by their utilization of primary care service furnished by physicians that are ACO professionals in the ACO, determines beneficiary assignment to an ACO under the Shared Savings Program.

In developing the policies for the November 2011 final rule, it was our intent to incentivize ACOs to redesign care processes and improve the health care system for all FFS beneficiaries and not create an incentive to treat some FFS beneficiaries preferentially or create inequalities in the care provided to FFS beneficiaries. We developed a hybrid approach where ACOs are given up-front information about their fee-for-service beneficiary population to help refine their care coordination activities, but are assessed at the end of each year based on beneficiaries that received a plurality of their primary care from ACO professionals during the performance year. We called this assignment method preliminary prospective assignment with retrospective reconciliation. Medicare FFS beneficiaries do not enroll in the Shared Savings Program, and they retain the right to seek treatment from any Medicare-enrolled provider of their choosing. No exclusions or restrictions based on health conditions or similar factors are applied in the assignment of Medicare FFS beneficiaries. We adopted this policy because we believed that the methodology would balance beneficiary freedom to choose providers under FFS Medicare with the ACO's desire to have information about the FFS beneficiaries that were likely to be assigned at the end of the performance year.

Patient advocacy groups and ACOs have expressed interest in and support for enhancing claims-based assignment of beneficiaries to ACOs by taking into account beneficiary attestation regarding the provider that they consider to be responsible for coordinating their overall care. Stakeholders believe that incorporating this information and giving beneficiaries the opportunity to voluntarily ''align'' with the ACO in which their primary healthcare provider participates will improve the patient-centeredness of the assignment methodology.

To begin to address these concerns, we began conducting a test of beneficiary attestation in the Pioneer ACO Model for the 2015 performance year. Specifically, the Innovation Center designed a test in which beneficiaries were asked to confirm whether or not a listed provider or supplier is their ''main doctor.'' Beneficiaries who confirmed a care relationship with the provider/supplier listed on the form and met all other eligibility criteria for alignment are aligned to the Pioneer ACO for the following performance year, regardless of whether or not the practitioners participating in the Pioneer ACO render the plurality of the beneficiary's primary care services during the alignment year. Additional testing in the future is planned under the Pioneer ACO Model and the Next Generation ACO Model that will build upon lessons learned from this initial test and in which we will seek to enhance the meaningfulness of dialogue between beneficiaries and their providers regarding the nature of the care relationship.

Although we did not make any specific proposals related to beneficiary attestation, we welcomed comments on whether it would be appropriate to offer a beneficiary attestation process to ACOs that choose to participate in the Shared Savings Program under two-sided risk financial arrangements. We noted that if we were to offer a beneficiary attestation process for ACOs that choose to participate in the Shared Savings Program under two-sided risk financial arrangements, we would anticipate implementing this beneficiary attestation in a manner consistent with the beneficiary attestation policy tested under the Pioneer ACO Model for the 2015 performance year. We sought

comment on a wide variety of policy and operational issues related to beneficiary attestation.

In connection with any implementation of beneficiary attestation, we also indicated that we would revise our regulations as necessary to protect beneficiaries from undue coercion or influence in connection with whether they choose to attest or not. We noted that beneficiary attestation is not intended to be used as a mechanism for ACOs (or ACO participants, ACO providers/suppliers, ACO professionals or others) to target potentially lucrative beneficiaries or avoid those less likely to produce savings. Further, we stated that we did not believe ACOs or others should be permitted to offer gifts or other inducements to beneficiaries, nor should they be allowed to withhold or threaten to withhold services, for the purposes of coercing or influencing their alignment decisions. However, we would not prohibit an ACO or its ACO participants and ACO providers/suppliers from providing a beneficiary with accurate descriptive information about the potential patient care benefits of aligning with an ACO. We solicited comment on these issues.

We received the following comments:

Comments: Most commenters supported beneficiary attestation for all tracks. Some commenters requested that we revise the assignment rules to permit (but not require) beneficiaries to elect to attribute themselves to a particular ACO or ACO physician. These commenters stated that they believe the most accurate method of assigning a beneficiary to a provider is based on the beneficiary's active selection and objected to the statutory requirement that a beneficiary be assigned to an ACO based on his/her utilization of primary care services furnished by physicians participating in the ACO. Some commenters supported beneficiary attestation only for ACOs participating in a two-sided performance-based risk model and further suggested that, unlike the Pioneer pilot, the attestation process should be available to all such patients, not just those previously assigned to the ACO.

Some commenters opposed beneficiary attestation or expressed significant concerns with it. These commenters stated that absent extensive beneficiary education (which has not yet occurred) beneficiary attestation may be premature. Some stated that while this policy may be appealing, more analysis is needed at this time to fully understand how it could be operationalized in a still-evolving national program. Other commenters questioned what purpose beneficiary attestation would serve and why it is under consideration at all, given that it may open the door to marketing abuses by ACOs.

Response: We agree with commenters who recommended that we implement a policy to revise the beneficiary assignment methodology to permit beneficiaries to indicate who they believe is the ''main doctor'' responsible for their care coordination. We anticipate that a voluntary alignment approach that incorporates beneficiary preferences to supplement the current claims-based beneficiary assignment process could help mitigate fluctuations in assigned beneficiary populations. As explained in section II.F.3.(b).(4). of this final rule, such beneficiary attestation could be considered prior to applying the other assignment rules for assigning beneficiaries to an ACO.

We further believe this method would be consistent with the statutory requirement that a beneficiary be assigned to an ACO on the basis of primary care services rendered by physicians because the beneficiaries eligible for assignment under an approach similar to the one used in the Pioneer ACO Model for performance year 2015 would be those that were previously assigned based on an analysis of the ACO's claims for primary care services, including the requirement that the beneficiary have received at least one primary care service from a physician who is an ACO professional in the ACO.

However, based on our recent experiences with similar approaches under the Pioneer ACO Model, we also agree with commenters who believe that additional development and testing of the beneficiary attestation approach is necessary before it can be incorporated into the Shared Savings Program. We note that through the Next Generation ACO Model (see the CMS Web site at *http://innovation.cms.gov/Files/x/nextgenacorfa.pdf* pages 18 through 20), CMS will offer beneficiaries an opportunity to become aligned to Next Generation ACOs voluntarily as an addition to claims-based alignment. Next Generation ACOs may offer currently and previously aligned beneficiaries the option to confirm or deny their care relationships with specific Next Generation Providers/Suppliers. These decisions will take effect in alignment for the subsequent year. A beneficiary who completes the voluntary alignment process will have the option to reverse that decision or change the identified provider prior to development of the ACO's alignment list. The confirmation of a care relationship through the voluntary alignment process will supersede claims-based attribution. For example, beneficiaries who indicate a Next Generation provider/supplier as their main care provider will be aligned with the ACO, even if claims-based alignment would not result in alignment. In later years of the Next Generation ACO Model, CMS may refine the voluntary alignment policies as follows:

- Make alignment accessible to a broader set of Medicare beneficiaries, regardless of current or previous alignment with an ACO.
- Include affirmation of a general care relationship between beneficiaries and ACOs instead of between beneficiaries and specific providers.
- Allow beneficiaries to opt out of alignment to a particular ACO in addition to opting into alignment.

Therefore, we intend to carefully consider the results of further testing of beneficiary attestation under the Pioneer ACO Model and the Next Generation ACO Model for the 2016 performance year and expect to propose to implement beneficiary attestation for purposes of beneficiary assignment under the Shared Savings Program beginning January 1, 2017. We expect to propose a beneficiary attestation policy for the Shared Savings Program in the 2017 PFS rulemaking. This timeline will allow for further development and testing of this approach through the Pioneer ACO Model and further development of this approach through the Next Generation ACO Model. Initially, until we gain additional operational experience, we anticipate limiting this beneficiary attestation process to ACOs that choose Tracks 2 or 3 as an additional incentive for ACOs willing to take on increased risk. This approach will also allow for further development of the operational details, and will provide an opportunity for additional public input. We will also have additional time to learn from CMS Innovation Center models that are testing beneficiary attestation, specifically the Pioneer ACO Model and the Next Generation ACO Model.

Comment: Some commenters provided suggestions on specific operational details regarding implementing beneficiary attestation under the Shared Savings Program. Some commenters suggested that the attestation method being tested under the Pioneer ACO Model is burdensome and that CMS should develop a system in which patients could select an ACO via 1–800 Medicare or Medicare.gov. A commenter indicated that the attestation should be based on the patient's

selection of their primary care provider, rather than the name of an ACO, since most patients will not be familiar with the name of their provider's ACO. The commenter suggested that ACOs be responsible for informing patients of the option to attest to a care relationship with an ACO, but that CMS should administer the process and maintain information on patient choices and help assure that beneficiary communications about attestation and opting in or opting out will be consistent and appropriate. A commenter suggested that the patient attestation and beneficiary opt-out processes only occur during the first three months of each performance year. A commenter's suggestions for making performance-based risk more attractive included rapid development and implementation of a user friendly beneficiary and provider portal similar to those used in the commercial insurance market that would be maintained by CMS and accessible to beneficiaries, ACOs and providers. The commenter explained beneficiaries would be allowed to select their ACO or primary care provider in more ''real time,'' and the providers could in turn ''pull'' the information from the portal. The commenter believes that CMS is currently using archaic means to transfer information to the ACOs participating in the Shared Savings Program, with cumbersome data feeds that require manpower and expense to manipulate.

Response: We appreciate receiving the many helpful suggestions, which we will further consider in the development of any future proposals to incorporate beneficiary attestation as part of the Shared Savings Program.

FINAL ACTION: We expect to propose to implement beneficiary attestation for purposes of beneficiary assignment under the Shared Savings Program beginning January 1, 2017, in the 2017 PFS rulemaking. This timeline will allow for further development and testing of this approach through the Pioneer ACO Model and the Next Generation ACO Model and development of appropriate safeguards against abusive or coercive marketing associated with beneficiary attestation. Initially, until we gain additional operational experience, we anticipate limiting the beneficiary attestation process to ACOs participating under Tracks 2 or 3.

(2) Solicitation of Comment on a Step-Wise Progression for ACOs To Take on Performance-Based Risk

Under the current Shared Savings Program rules, an ACO may not include an entity on its list of ACO participants unless all ACO providers/suppliers billing through the entity's Medicare-enrolled TIN have agreed to participate in the program and comply with the program rules (see discussion in section II.B. of this final rule). Furthermore, it is not possible under our current regulations for some ACO providers/suppliers to participate in Track 1, while other ACO providers/suppliers that may be more ready to accept performance-based risk participate under Track 2. In the proposed rule, we noted that some stakeholders have commented that requiring all ACO providers/suppliers billing through an ACO participant TIN to participate in the same risk track could deter some ACOs from entering higher risk arrangements (Tracks 2 or 3) if they do not believe that all of the ACO providers/suppliers billing through a given ACO participant TIN are prepared to operate under high levels of risk. Conversely, we have heard from other stakeholders that requiring all ACO providers/suppliers billing though an ACO participant TIN to enter the same risk track can motivate an organization to work toward a common performance goal and implement uniform care processes that streamline patient care within and between various sites of care. We believe that the program works best when the incentives within an organization are aligned among all providers and suppliers in that organization.

We did not propose to change our regulations in order to allow providers and suppliers billing through the same ACO participant TIN to participate in different tracks under the Shared Savings Program. However, given our policy objectives to encourage ACOs to redesign their care processes and move to increasing levels of financial risk, we expressed our interest in stakeholder opinion on this issue and sought comment on what options the program might consider in the future to encourage organizations to participate in the program while permitting the providers and suppliers within that organization to accept varying degrees of risk. In particular, we sought stakeholders' input on the advantages and disadvantages of allowing Shared Savings Program ACOs that wish to enter a track with increased risk to split their ACO participants into different tracks or split ACO providers/suppliers billing through a given Medicare-enrolled TIN so that a subset participate in a track that offers a higher sharing rate in exchange for taking on a greater degree of performance-based risk, while the remainder participate in a lower risk track.

Comments: We received a modest number of comments on this issue and the commenters were mixed on their views. Some commenters supported permitting ''split TINs'', stating this may increase the number of providers willing to join ACOs but who may not be ready for assuming risk and may allow ''single TIN'' entities or large organizations such as academic medical centers and their faculty practice plans to enter the program with a subset of their providers—primary care providers, for example—rather than sitting out until they confidently believe that the whole system is ready to participate. Some suggested modifications should be made such as dividing TINs geographically so that one TIN may participate in multiple ACOs.

Some other commenters were strongly opposed to permitting ACOs to split ACO providers/suppliers or ACO participant TINs between risk tracks. Such commenters stated they believe the concept and practice of accountability and transforming the care of a population should be universal throughout the ACO, and not segmented within the ACO. They expressed concerns that such a policy would open up the risk of gaming, both through selection of providers for participation in certain tracks and adverse selection of patients depending on an ACO's strategy of whether to assume one-sided or two-sided risk. Others expressed concern that such policies could lead to cherry picking of beneficiaries to achieve higher incentive payments without real quality improvement. Others raised concerns that this policy would be too complex and burdensome for both ACOs and CMS.

Response: We appreciate the comments on this issue. At this time, we are persuaded by commenters who raised concerns about operational complexity for ACOs and CMS. We also agree there could be significant risks for ''cherry picking'' of beneficiaries to achieve higher incentive payments without real quality improvement. Such strategies could be detrimental to the progress ACOs have made to date. Most ACOs are learning from their initial experiences in the Shared Savings Program, and many have been successful in transforming the care of their entire FFS beneficiary population while accepting accountability for all assigned patients. However, we appreciate the flexibility that could be afforded to ACOs if a methodology could be developed that would permit ACOs to split ACO participants or ACO providers/suppliers into two different

risk tracks. Under such a model, ACOs could progressively move providers participating in their organizations into risk in a step-wise fashion. Therefore, we are interested in exploring operational processes that could permit such a design while also ensuring appropriate beneficiary protections. We intend to continue considering this issue and may revisit it in future rulemaking as infrastructure evolves to support this new alternative.

FINAL ACTION: We will explore operational processes to develop a methodology that would permit ACOs to split ACO participants or ACO providers/suppliers into two different risk tracks while also ensuring appropriate beneficiary protections. We may revisit this approach in future rulemaking as infrastructure evolves to support this new alternative.

TABLE 8—COMPARISION OF ONE- AND TWO-SIDED PERFORMANCE-BASED RISK MODELS BY TRACK

Issue	Track 1: One-Sided Risk Model		Tracks 2 and 3: Two-Sided Risk Models		
	Current	Final	Current Track 2	Final	New Track 3
Transition to Two-Sided Model.	First agreement period under one-sided model. Subsequent agreement periods under two-sided model.	Remove requirement to transition to two-sided model for a second agreement period.	ACOs may elect Track 2 without completing a prior agreement period under a one-sided model. Once elected, ACOs cannot go into Track 1 for subsequent agreement periods.	No change	Same as Track 2.
Assignment	Preliminary prospective assignment for reports; retrospective assignment for financial reconciliation.	No change	Preliminary prospective assignment for reports; retrospective assignment for financial reconciliation.	No change	Prospective assignment for reports, quality reporting and financial reconciliation.
Benchmark	Reset at the start of each agreement period.	Modifications to rebasing methodology for an ACO's second or subsequent agreement period: equal weighting benchmark years, and including a per capita amount reflecting the ACO's financial and quality performance during prior agreement period.	Same as Track 1	Same as Track 1.	Same as Tracks 1 and 2.
Adjustments for health status and demographic changes.	Historical benchmark expenditures adjusted based on CMS-HCC model. Updated historical benchmark adjusted relative to the risk profile of the performance year. Performance year: newly assigned beneficiaries adjusted using CMS-HCC model; continuously assigned beneficiaries adjusted using demographic factors alone unless CMS-HCC risk scores result in a lower risk score.	No change	Same as Track 1	No change	Same as Tracks 1 and 2.
Benchmark and Performance year Expenditures.	Payment amounts included in Parts A and B FFS claims using a 3-month claims run out with a completion factor. (i) excluding IME and DSH payments. (ii) including individually beneficiary identifiable payments made under a demonstration, pilot or time limited program.	No change	Same as Track 1	No change	Same as Tracks 1 and 2.

TABLE 8—COMPARISION OF ONE- AND TWO-SIDED PERFORMANCE-BASED RISK MODELS BY TRACK—Continued

Issue	Track 1: One-Sided Risk Model		Tracks 2 and 3: Two-Sided Risk Models		
	Current	Final	Current Track 2	Final	New Track 3
Final Sharing Rate.	Up to 50% based on quality performance.	No change. (Up to 50% based on quality performance for second agreement period under the one-sided model).	Up to 60% based on quality performance.	No change	Up to 75% based on quality performance.
Minimum Savings Rate.	2.0% to 3.9% depending on number of assigned beneficiaries.	No change	Fixed 2.0%	Choice of symmetrical MSR/MLR: (i) no MSR/MLR; (ii) symmetrical MSR/MLR in 0.5% increment between 0.5% - 2.0%; (iii) symmetrical MSR/MLR to vary based upon number of assigned beneficiaries (as in Track 1).	Same as Track 2.
Minimum Loss Rate.	Not applicable	No change	Fixed 2.0%	See options under MSR.	See options under MSR.
Performance Payment Limit.	10%	No change	15%	No change	20%.
Shared Savings ..	First dollar sharing once MSR is met or exceeded..	No change	Same as Track 1	No change	Same as Tracks 1 and 2.
Shared Loss Rate.	Not applicable	No change	One minus final sharing rate applied to first dollar losses once minimum loss rate is met or exceeded; shared loss rate may not be less than 40% or exceed 60%.	No change	One minus final sharing rate applied to first dollar losses once minimum loss rate is met or exceeded; shared loss rate may not be less than 40% or exceed 75%.
Loss Sharing Limit.	Not applicable	No change	Limit on the amount of losses to be shared phases in over 3-years starting at 5% in year 1; 7.5% in year 2; and 10% in year 3 and any subsequent year. Losses in excess of the annual limit would not be shared.	No change	15%. Losses in excess of the annual limit would not be shared.
Payment and Program Rule Waivers under Part 425.	Not applicable	No change	Not applicable	No change	ACOs may elect to apply for a waiver of the SNF 3-Day Rule.

G. Additional Program Requirements and Beneficiary Protections

1. Background

Section 1899(a)(1)(A) of the Act authorizes the Secretary to specify criteria that ACOs must satisfy in order to be eligible to participate in the Shared Savings Program. In the November 2011 final rule, we finalized policies regarding how ACOs will be monitored with respect to program requirements and what actions will be taken against ACOs that are not in compliance with the requirements of the Shared Savings Program.

Based on our initial experience with the Shared Savings Program, we proposed several refinements and clarifications to our policies on the following:

- Public reporting (§ 425.308).
- Termination of the participation agreement (§§ 425.218 and 425.220).

• Enforcement of ACO compliance with quality performance standards (§ 425.316(c)).

• Reconsideration review procedures (§§ 425.802 and 425.804).

2. Public Reporting and Transparency

a. Overview

Section 1899 of the Act sets forth a number of requirements for ACOs. Section 1899(b)(2)(H) of the Act requires ACOs to demonstrate that they meet patient-centeredness criteria specified by the Secretary. We believe that one important aspect of patient-centeredness is patient engagement and transparency. Increasingly, transparency of information in the health care sector is seen as a means to help patients become more active in their health care choices and to generate feedback that may improve the quality of care and lower the cost of care. In addition, transparency may improve oversight and program integrity. Public reporting also supports the mandate for ACOs to be willing to ''become accountable for the quality, cost, and overall care'' of the Medicare beneficiaries assigned to them. Reports on ACO quality and cost performance hold ACOs accountable and contribute to the dialogue on how to drive improvement and innovation in health care. Public reporting of ACO cost and quality data may improve a beneficiary's ability to make informed health care choices and facilitate an ACO's ability to improve the quality and efficiency of its care.

Therefore, for these reasons, which are described in more detail in the November 2011 final rule, we finalized requirements specified at § 425.308 that ACOs must make certain information publicly available. Since publication of the final rule, minor updates were made to § 425.308(e) in the 2013 PFS final rule with comment period (77 FR 69164 through 69170) and in the 2015 PFS final rule with comment period (79 FR 67769). For purposes of the Shared Savings Program, each ACO is currently required at § 425.308 to publicly report certain organizational and other information. Currently, we recommend that ACOs publicly report the specified information in a standardized format that we have made available to ACOs through guidance at *http://www.cms.gov/Medicare/Medicare-Fee-for-Service-Payment/sharedsavingsprogram/Downloads/ACO-Public-Reporting-Guidance.pdf*. Our guidance recommends that ACOs report the required information on a Web site that complies with the marketing requirements set forth at § 425.310. Because Web pages used to publicly report the information specified in § 425.308 constitute ''marketing materials and activities,'' as defined at § 425.20, any changes to such Web pages must be submitted for our review in accordance with § 425.310. Thus, if an ACO changes any of the information on its public reporting Web page, such as adding an ACO participant or replacing a member of the governing body, the ACO must submit its Web page to us for marketing review. Because we believe this policy creates undue burden on the ACO as well as on CMS, we proposed some refinements to the requirements related to public reporting and transparency.

b. Proposals

In the December 2014 proposed rule, we proposed to modify the public reporting requirements set forth at § 425.308. In § 425.308(a), we proposed to require that each ACO maintain a dedicated Web page on which the ACO must publicly report specified information. In addition, we proposed that an ACO must report to us the address of the Web page on which it discloses the information set forth in § 425.308 and apprise us of changes to that Web site address in the form and manner specified by CMS. We solicited comment on when an ACO should be required to inform us of such changes (for example, within 30 days after the change has occurred).

Additionally, we noted that existing § 425.308(b) requires ACOs to report certain information in a standardized format specified by CMS. Currently, our guidance sets forth a standardized format (template) that ACOs must use so that ACOs report information uniformly. We proposed in § 425.308(c) that information reported on an ACO's public reporting Web page in compliance with the requirements of the standardized format specified by CMS, (that is, through use of the template) would not be subject to marketing review and approval under § 425.310.

We also proposed to make a few changes to the information that must be publicly reported. In § 425.308(b), we proposed to add two categories of organizational information that must be publicly reported. First, we proposed to add a requirement at § 425.308(b)(3)(iv) that ACOs publicly identify key clinical and administrative leaders within their organization as part of the public reporting requirements. Second, we proposed to add a provision at § 425.308(b)(3)(vi) requiring ACOs to publicly report the types of ACO participants or combinations of ACO participants, as listed in § 425.102(a), that form the ACO. We believe it would be helpful for the public to have a better understanding of the types of ACO participants or combinations of ACO participants that are listed at § 425.102(a) that have joined to form the ACO. We noted that stakeholders have requested information about the composition of ACOs and that publicly reporting the types and combinations of ACO participants would assist stakeholders in understanding the composition of ACOs.

In addition, we proposed at § 425.308(b)(5) to require each ACO to publicly report its performance on all quality measures used to assess the quality of care furnished by the ACO. As explained in more detail in the December 2014 proposed rule, we agreed with the comments made by stakeholders that requiring an ACO to publicly report its performance on all quality measures (as defined at § 425.20) would provide a more accurate picture of the ACO's performance. We also noted a technical modification to our rules. Currently, we require ACOs to report the amount of any ''shared savings performance payment'' (§ 425.308(d)(1)). However, to conform this provision to the definition of ''shared savings'' at § 425.20, we proposed to remove the term ''performance payment'' from the phrase and insert the new language at revised § 425.308(b)(4)(i).

Finally, we noted in the December 2014 proposed rule that, for purposes of program transparency, we find it useful to publicly post certain information about ACOs. Therefore, we proposed at § 425.308(d) to post certain ACO-specific information, including information that the ACO is required to publicly report under § 425.308, as necessary to support program goals and transparency. We solicited comment on what other information should be published on our Web site. Because proposed § 425.308(d) encompasses our ability to publicly report ACO performance on all quality measures, we proposed to remove § 425.308(e) or reserve it for future use.

Comment: Many commenters expressed support for our public reporting and transparency requirements, stating that they enable beneficiaries to make informed decisions and reduce fraud and abuse. Commenters also noted that transparency and public reporting can spur innovation in quality and efficiency. Stakeholders also supported implementation of these policies in a way that would not impose undue burdens for ACOs.

Response: We appreciate stakeholder support for public reporting and

transparency requirements. We agree that such transparency can improve beneficiary engagement, reduce fraud and abuse, and encourage organizations to improve quality and efficiency of care. We believe that many of the policies proposed will reduce burden on ACOs and CMS because, for example, the ACO will have a pre-approved format for reporting the required information and such changes will not be subject to marketing review.

Comment: A few commenters specifically addressed our proposal to require ACOs to maintain a dedicated Web page and report the address to us. These commenters encouraged CMS to provide ACO web addresses through the CMS Web site and suggested that ACOs notify CMS of Web page address changes and other changes within a reasonable time frame to permit CMS compliance review.

Several commenters specifically supported our proposal to require ACOs to use a standardized template to publicly report required information and supported our proposal to not require marketing review of information disclosed using a standardized template. Commenters agreed that our policies would ensure consistent practice by all ACOs, make information uniformly available to the public, and provide some relief from marketing reviews. Some commenters stressed the importance of ensuring that ACOs post accurate, CMS-validated information on their Web sites. A commenter stated that the marketing review in general is overly burdensome and urged CMS to review the current marketing requirements. Additionally, a few commenters suggested that we ensure that the required template is clear and manageable by soliciting input from stakeholders such as ACOs, beneficiaries, and others on draft templates prior to implementation.

Some commenters suggested that use of the template should be optional, in which case changes to information posted by ACOs choosing not to use the template would remain subject to marketing review. A commenter specifically opposed the use of a template, stating that its use would stifle creativity and limit available data.

Response: We appreciate commenters' support for our proposals to require an ACO to maintain a dedicated Web page and report this web address to us. We also appreciate support for ACOs to use a standardized template which will be exempt from marketing review. Because we believe it is important for this information to be uniformly available to the public, we will not permit ACOs to diverge from the template required by CMS. We note that although information reported using the template will be exempt from the marketing review requirements, such information will continue to be subject to compliance audit and review and therefore must be accurately maintained. Furthermore, we may consider whether our marketing review requirements should be revised in future rulemaking. We also note that if an ACO wants to report more information than required in the template, the ACO may submit the additional information through marketing review if such information constitutes ''marketing materials and activities'' as defined at § 425.20. Finally, we invite ACO input through established modes of communication with CMS on templates that are developed and intend to take such comments into consideration when revising and updating the template.

Comment: A few comments directly addressed our proposals for modifying the kind of information ACOs must make publicly available. A commenter noted that these additional requirements will facilitate shared learning among ACOs and stakeholders. Another commenter stated that it would support reporting additional organizational information if CMS defines terms and provides clear guidance on what needs to be posted. Several commenters suggested requiring ACOs to publicly report additional information, such as disclosure of its parent corporation or the amount of shared savings that participating physicians in the ACO receive. A commenter encouraged CMS to establish a requirement for ACOs to report their HIT and interoperability capabilities. Another commenter recommended that we permit flexibility for ACOs to supplement the required publicly posted information with additional metrics.

Response: We are finalizing our proposals to modify the information ACOs are required to publicly report. Specifically, in addition to the information the ACO is currently required to report, we will require ACOs to publicly identify key clinical and administrative leaders within their organizations and the types of ACO participants or combinations of ACO participants that are listed at § 425.102(a) that have joined to form the ACO. We believe these minor additions will improve public understanding of individual ACOs as well as foster shared learning. Additionally, we will provide further guidance to help ACOs clearly understand what information they must make publicly available. We appreciate the suggestions for reporting additional ACO-specific information, and believe it could be appropriate to require ACOs to make this type of information public. However, we believe it will be appropriate to give ACOs and other stakeholders the opportunity to provide input on what additional information ACOs should be required to make public and whether there are other factors that should be considered before adopting additional public reporting requirements. Accordingly, we expect to consider these suggestions further in future rulemaking.

Additionally, we note that ACOs are currently permitted to maintain and post additional metrics on their own public Web sites. However, such information is subject to marketing review.

Comment: A few commenters supported the posting of ACO quality measure results publicly in general. However, they opposed duplication of effort. Specifically, commenters disagreed with our proposal to require ACOs to report on their Web sites the same information that would be posted by CMS, for example, on Physician Compare, stating this would be redundant.

Several commenters supported the proposal and recommended that ACO-specific information be posted at a ''central CMS location.''

A few commenters recommended that we post additional ACO-specific information, such as ACO and commercial cost information or additional quality information, such as medical errors and infection rates. A few commenters provided specific recommendations related to quality data reporting, specifically, that CMS post quality measure results at the provider level. A commenter stated that ACO measures should be reported at the ACO or ACO participant level, but not at the ACO provider/supplier level. Another commenter urged CMS to provide thorough explanations of measures and rankings to ensure the public understands ACO quality performance data.

Some commenters expressed the need for public reporting uniformity across CMS and ACO Web sites, and a commenter suggested that ACO information be posted on a state's department of public health Web site.

Response: We are finalizing our proposal to require ACOs to report all quality measure data on their public Web sites. Although this policy may appear redundant or duplicative, we believe it is important to provide stakeholders multiple ways to retrieve information about specific ACOs and the program as a whole. For instance, the public can access specific and

updated information about a particular ACO by going to ACO-specific Web sites which will likely be updated more frequently than the CMS Web site, which provides annual information (such as the results of quality reporting) for all ACOs in one location to allow for comparison between ACOs. We note that we do not believe we have the authority to require posting of ACO information on states' department of public health Web sites. However, we anticipate posting all ACO-specific information on a central, easily accessible Web site.

For the reasons stated previously, and to ensure accuracy and transparency of ACO-specific information, we are also finalizing our proposal to post ACO-specific data as necessary to support program goals.

FINAL ACTION: We are finalizing these policies as proposed. These policies are reflected in § 425.308. Specifically, we require that each ACO maintain a dedicated Web page on which the ACO must publicly report the information listed in paragraph (b) using a template specified by CMS. We are making a technical correction at § 425.308(b) to add the word ''publicly'' to clarify that the information reported using the template must be publicly available. Each ACO must report to us the address of the Web page on which it discloses the information set forth in § 425.308 and apprise us of changes to that Web site address in the form and manner specified by CMS in operational guidance. Additionally, information reported on an ACO's public reporting Web page in the standardized format specified by CMS will not be subject to marketing review and approval under § 425.310.

We are also finalizing our proposal to revise the information that must be publicly reported. Specifically, we are requiring at § 425.308(b)(3)(iv) that ACOs publicly identify and list the key clinical and administrative leaders within their organization. Additionally, we are adding a provision at § 425.308(b)(3)(vi) to require ACOs to publicly report the types of ACO participants or combinations of ACO participants, as listed in § 425.102(a), that form the ACO.

We are finalizing the modification to § 425.308(b)(5) as proposed to require each ACO to publicly report its performance on all quality measures as well as the technical modification to § 425.308(d)(1) to remove the term ''performance payment'' and insert revised language at § 425.308(b)(4)(i). Additionally, as discussed in more detail in section II.F.7. of this final rule, we will include the requirement for ACOs to publicly report their use of any waivers under § 425.612, if applicable.

Lastly, we are finalizing § 425.308(d), which will allow CMS to publicly report ACO-specific information, including information the ACO is required to publicly report under § 425.308, as necessary to support program goals and transparency. Because§ 425.308(d) encompasses our ability to publicly report ACO performance on all quality measures, we are finalizing our proposal to remove § 425.308(e).

3. Terminating Program Participation

a. Overview

Section 425.218 of our regulations sets forth the grounds for terminating an ACO for failure to comply with the requirements of the Shared Savings Program (§ 425.218(a)). For example, an ACO's or ACO participant's failure to notify beneficiaries of their provider's participation in the program as required under § 425.312 would constitute grounds for terminating the ACO. In addition, we may terminate an ACO for a number of other violations, such as those related to certain fraud and abuse laws, the antitrust laws, or other applicable Medicare laws and regulations relevant to ACO operations, or if certain sanctions have been imposed on the ACO by an accrediting organization or a federal, state or local government agency (§ 425.218(b)).

Prior to termination, we may take interim steps such as issuing the ACO a warning notice or placing the ACO on a corrective action plan (CAP) (§ 425.216). However, we reserved the right to immediately terminate a participation agreement if necessary (§ 425.218(c)). We notify the ACO in writing if the decision is made to terminate the participation agreement.

Under § 425.220, an ACO may voluntarily terminate its participation agreement. Such an ACO is required to provide CMS and all of its ACO participants with 60 days advance written notice of its decision to terminate its participation in the Shared Savings Program. An ACO is not required to notify beneficiaries of the ACO's decision to terminate from the Shared Savings Program. Under current regulations, an ACO that terminates its participation agreement before expiration of the participation agreement does not share in any savings for the performance year during which it notifies CMS of its decision to terminate the participation agreement (§ 425.220(b)). This is because an ACO that terminates its participation agreement during a performance year will have failed to complete the entire performance year. Therefore, it will have failed to meet the requirements for shared savings.

b. Proposed Revisions

We proposed several modifications to the regulations related to termination of a participation agreement. First, we proposed to permit termination for failure to timely comply with requests for documents and other information and for submitting false or fraudulent data. In addition, we proposed to add a new regulation at § 425.221 requiring ACOs to implement certain close-out procedures upon termination and nonrenewal. Finally, we proposed to address in new § 425.221 the payment consequences upon termination of a participation agreement.

(1) Grounds for Termination

First, at § 425.218(b) we proposed to modify the grounds for termination to specifically include the failure to comply with CMS requests for submission of documents and other information by the CMS specified deadline. At times, we may request certain information from the ACO in accordance with program rules. As explained in the December 2014 proposed rule, the submission of those documents by the specified due date is important for program operations. For example, we require each ACO to submit to us, on an annual basis, its list of ACO participants and their TINs (existing § 425.304 and proposed § 425.118). We explained that when ACOs do not submit these lists by the due date specified, it prevents us from applying the assignment methodology (which is dependent on having accurate lists of ACO participants for all ACOs) and impacts the timelines for the program, such as the calculation of the benchmarks for all ACOs. Missing such deadlines is very disruptive to the program and other ACOs. Therefore, we proposed to modify § 425.218(b) to permit termination of an ACO agreement for failure to comply with requests for information and documentation by the due date specified by CMS.

Additionally, under § 425.302, an individual with the authority to legally bind the individual or entity submitting data or information to CMS must certify the accuracy, completeness, and truthfulness of the data and information to the best of his or her knowledge and belief. However, circumstances could arise in which the data and information submitted (for example, data submitted through the CMS web interface used to determine an ACO's quality performance) was falsified or

fraudulent. Submission of false or fraudulent data is a serious offense that could harm the Shared Savings Program; for example, it could impact the amount of shared savings calculated for the ACO and cause CMS to overpay the ACO. We proposed to modify § 425.218(b) to permit termination of an ACO agreement for submission of false or fraudulent data. We note that ACOs are obligated to repay shared savings payments to which they are not entitled, including, by way of example only, any overpayment to the ACO based on the submission of false or fraudulent data.

(2) Close-Out Procedures and Payment Consequences of Early Termination

We proposed to add new § 425.221 to address close-out procedures and payment consequences of early termination. First, we believe it was important to establish an orderly close-out process when an ACO's participation agreement is terminated. Therefore, we proposed in § 425.221(a) that an ACO whose participation agreement is terminated prior to its expiration either voluntarily or by CMS must implement close-out procedures in a form, manner, and deadline specified by CMS. We proposed that these close-out procedures would address such issues as data sharing (such as data destruction), beneficiary notification (for example removal of marketing materials and ensuring beneficiary care is not interrupted), compliance with quality reporting, and record retention. We noted that the close-out procedures would also apply to those ACOs that have elected not to renew their agreements upon expiration of the participation agreement. We also proposed in § 425.221(a)(2) that any ACO that failed to complete the close-out procedures in the form and manner and by the deadline specified by CMS would not be eligible for shared savings. We solicited comments on other strategies that would ensure compliance with close-out procedures.

Second, we proposed in § 425.221(b) to address certain payment consequences of early termination. Currently under § 425.220(b), an ACO that voluntarily terminates its agreement at any time during a performance year will not share in any savings for the performance year during which it notifies CMS of its decision to terminate the participation agreement. However, stakeholders suggested that completion of the performance year, as part of an orderly close-out process, could be mutually beneficial to the ACO, its ACO participants and ACO providers/suppliers, and to CMS. Specifically, stakeholders suggested that an ACO should be entitled to receive shared savings if the ACO completes a performance year through December 31 and satisfies all requirements for sharing in savings for that performance year (for example, the quality reporting for the performance year). Additionally, by completing quality reporting as part of the close-out process, the ACO participants would not be penalized by the ACO's decision to terminate its participation agreement. For example, eligible professionals that bill through the TIN of an ACO participant could satisfy the reporting requirement to avoid the downward payment adjustment under the PQRS in a subsequent year.

Therefore, we proposed in § 425.221(b) to permit an ACO whose participation agreement is voluntarily terminated by the ACO under § 425.220 to qualify for shared savings, if—

- The effective date of termination is December 31; and
- By a date specified by CMS, it completes its close-out process for the performance year in which the termination becomes effective.

In order to effectively manage this option in the case of voluntary termination, the ACO must specify in its termination notice, and CMS must approve, a termination effective date of December 31 for the current performance year. Because the proposed new provision at § 425.221 addressed the consequences of termination, including the payment consequences, we also proposed to make a conforming change to § 425.220 to remove paragraph (b) addressing the payment consequences of early termination.

We noted that under this proposal, the opportunity to share in savings for a performance year would not extend to ACOs that terminate their participation agreement with effective dates prior to December 31 or to ACOs that CMS terminates under § 425.218. Those ACOs that terminate prior to December 31 would not have completed the performance year and thus would not qualify for shared savings. ACOs terminated by CMS under § 425.218 would not qualify for shared savings irrespective of the termination date because maintaining eligibility to participate in the Shared Saving Program is a pre-requisite for sharing in savings (see §§ 425.604(c) and 425.606(c)). In such cases, we strongly encouraged ACOs to fulfill their obligations to their ACO participants and ACO providers/suppliers by reporting quality for the performance year in which it terminates so that their ACO participants and ACO providers/suppliers are not unduly penalized by the ACO's decision. However, even if the ACO completes quality reporting on behalf of its ACO participants and ACO provider/suppliers, if the ACO terminates its participation midyear or is terminated by CMS under § 425.218 (prior to December 31), it would not be eligible to share in savings for the performance year. The ACO would not be eligible to share in savings because the ACO would not have satisfied all requirements for sharing in savings for that performance year.

Comment: A few commenters supported the proposals related to grounds for termination of an ACO, stating that it is important to ensure consistent practices by all participants. A commenter supported the proposal so long as ACOs would be provided reasonable timeframes to satisfy CMS requests.

Response: We agree that it is important to apply consistent practices across ACOs participating in the Shared Savings Program. The submission of documents by a specified due date is necessary for program operations. We believe that we have established reasonable timeframes for ACOs to satisfy such documentation requests, and we alert ACOs of deadlines well in advance through newsletters and other ACO communications. For example, we give ACOs at least 30 days to return the Certificate of Disposition for data destruction. Additionally, we allow ACOs to take up to 60 days to notify their participant TINs that the ACO is terminating its agreement with CMS. To date, ACOs have not expressed concern over these or other deadlines related to termination.

Comment: The few comments we received stated they supported our proposals regarding close-out procedures because of the clarity and certainty it provides for this aspect of the program. Several commenters supported our proposals regarding payment consequences of early termination. A commenter suggested that CMS provide an opportunity to negotiate certain close-out procedures without forfeiting shared savings if it poses no direct risks to beneficiaries. For example, the commenter stated that ACOs should be able to negotiate to adjust the timing of data destruction to correspond with established organizational timelines for such activities. Another commenter stated that ACOs should not be required to report quality measures to satisfy PQRS reporting on behalf of its eligible professionals that bill under the TIN of an ACO participant when the ACO terminates midyear. Another commenter stated that if unforeseen circumstances

prevent an ACO from completing the performance year, CMS should provide the ACO an opportunity to appeal the limitation against earning shared savings for that year.

Response: We appreciate the support for our proposals related to close-out procedures. The timely completion of all close-out procedures is mutually beneficial to the ACO, its ACO participants and ACO provider/suppliers, as well as CMS. We believe it is reasonable for an ACO to share in savings for a given performance year, provided it has satisfied all the requirements for obtaining a shared savings payment, including completion of the performance year and close-out procedures. The close-out procedures are particularly important because, for instance, they require the ACO to complete quality reporting after the completed performance year, adhere to data destruction requirements, and notify ACO participants, ACO providers/suppliers, and beneficiaries as necessary to ensure proper transfer of care. We also believe that requiring ACOs to complete close-out procedures in order to receive shared savings for their final performance year will result in timely and accurate completion of the ACO's final obligations after termination.

We will not provide ACOs that terminate in the middle of a performance year the opportunity to request an exception to or otherwise ''appeal'' the rule that prevents such ACOs from receiving shared savings. As we noted in the proposed rule, the opportunity to share in savings for a performance year will not extend to ACOs that terminate their participation agreement with effective dates prior to December 31 or to ACOs that CMS terminates under § 425.218 because the ACO will not have completed the requirements for sharing in savings for the performance year. Furthermore, our rule does not provide a methodology for calculating shared savings for partial year participation. Moreover, the determination of whether an ACO is eligible for shared savings is precluded from administrative and judicial review. Therefore, accommodating the commenter's request is beyond the scope of this rulemaking.

FINAL ACTION: We are finalizing our proposals related to terminating program participation. Specifically, we are finalizing our proposal to modify § 425.218(b) to permit termination of an ACO agreement for failure to comply with requests for information and documentation by the due date specified by CMS. Additionally, because we received no objections related to our proposal to terminate an ACO agreement for submission of false or fraudulent data, we are finalizing our proposal to modify § 425.218(b). We note that ACOs are obligated to repay shared savings payments to which they are not entitled, including, by way of example only, any overpayment to the ACO based on the submission of false or fraudulent data.

We are also finalizing our proposal to add new § 425.221 to address close-out procedures and payment consequences of early termination. At new § 425.221(a), an ACO whose participation agreement is terminated prior to its expiration either voluntarily or by CMS must implement close-out procedures regarding the following in a form, manner, and deadline specified by CMS:

- Notice to ACO participants of termination.
- Record retention.
- Data sharing.
- Quality reporting.
- Beneficiary continuity of care.

The close-out procedures also apply to those ACOs that have elected not to renew their agreements upon expiration of the participation agreement. At § 425.221(a)(2), any ACO that fails to complete the close-out procedures in the form and manner and by the deadline specified by CMS will not be eligible for shared savings. At new § 425.221(b), an ACO whose participation agreement is voluntarily terminated by the ACO under § 425.220 will qualify for shared savings for the performance year during which the termination becomes effective, if—

- The effective date of termination is December 31;
- By a date specified by CMS, the ACO completes its close-out process for the performance year in which the termination becomes effective; or
- The ACO has satisfied the criteria for sharing in savings for the performance year.

In order to effectively manage this option, the ACO must specify in its termination notice, and CMS must approve, a termination effective date of December 31 for the current performance year. Because the proposed new provision at § 425.221 will address the consequences of termination, including the payment consequences, we will also finalize our proposal to make a conforming change to § 425.220 to remove paragraph (b) addressing the payment consequences of early termination. For the reasons specified in our proposed rule, the opportunity to share in savings for a performance year does not extend to an ACO that terminates its participation agreement with an effective date prior to December 31 or to an ACO that CMS terminates under § 425.218.

4. Reconsideration Review Process

a. Overview

Under § 425.802(a), an ACO may appeal an initial determination that is not subject to the statutory preclusion on administrative or judicial review (see section 1899(g) of the Act). Specifically, the following determinations are not subject to administrative or judicial review:

- The specification of quality and performance standards under §§ 425.500 and 425.502.
- The assessment of the quality of care furnished by an ACO under the performance standards.
- The assignment of beneficiaries.
- The determination of whether the ACO is eligible for shared savings and the amount of such shared savings (including the determination of the estimated average per capita Medicare expenditures under the ACO for beneficiaries assigned to the ACO and the average benchmark for the ACO).
- The percent of shared savings specified by the Secretary and the limit on the total amount of shared savings established under §§ 425.604 and 425.606.
- The termination of an ACO for failure to meet the quality performance standards.

Initial determinations that are not precluded from administrative or judicial review would include the denial of an ACO application or the involuntary termination of an ACO's participation agreement by CMS for reasons other than the ACO's failure to meet the quality performance standard.

Under § 425.802(a), an ACO may appeal an initial determination that is not prohibited from administrative or judicial review by requesting reconsideration review by a CMS official. The request for review must be submitted for receipt by CMS within 15 days of the notice of the initial determination. Section 425.802(a)(2) provides that reconsiderations may be heard orally (that is, in person, by telephone or other electronic means) or on-the-record (review of submitted documentation) at the discretion of the reconsideration official.

b. Proposed Revisions

To date, all reconsideration review requests have been on-the-record reviews. As explained in the December 2014 proposed rule, we believe that on-the-record reviews are fair to both parties. We noted that our experience to

date demonstrated that a robust oral review was not necessary in light of the narrow scope of review. We found that the issues eligible for review could be easily communicated in a detailed writing by both parties and did not require in person witness testimony. We also noted that on-the-record reviews do not require as many agency resources and therefore would ensure that decisions are made in a timely manner.

Accordingly, we proposed to modify § 425.802 to permit only on-the-record reviews of reconsideration requests. Additionally, we proposed to similarly modify § 425.804 to clarify that the reconsideration process allows both an ACO and CMS to submit one brief each in support of its position by the deadline established by the CMS reconsideration official.

Comment: Overall, commenters supported the proposals to permit only on-the-record reviews of reconsideration requests. However, a commenter questioned why CMS would arbitrarily constrain the process to a single brief. Another commenter suggested that CMS provide a reconsideration or grievance process for beneficiaries similar to these processes under MA.

Response: We believe that the current reconsideration review process offers a sufficient mechanism for stakeholders to appeal CMS decisions related to the Shared Savings Program. As outlined in § 425.802, we give ACOs 15 days to request a reconsideration from the notice of the initial determination and a second opportunity to request a review of the reconsideration official's recommendation under § 425.806.

We clarify that our proposal for the ACO and CMS to file a single brief is related to CMS or the ACO's initial request for reconsideration. If either CMS or the ACO disagrees with the initial decision of the reconsideration official, CMS or the ACO may request an on-the-record review from an independent CMS official who was not involved in the initial determination or the reconsideration review process. Our experience to date demonstrated that a robust oral review is not necessary in light of the narrow scope of review, and for the reasons noted in the December 2014 proposed rule, we will modify § 425.802 to permit only on-the-record reviews of reconsideration requests.

Additionally, although we believe the current regulations support submission of only a single brief, we want to ensure that the reconsideration official has the information needed to make a determination. For this reason and in response to comment, we will modify our proposal. Specifically, we will finalize the proposal that the reconsideration process allows both an ACO and CMS to submit one brief each but also include that submission of additional briefs or evidence is at the discretion of the reconsideration official.

Finally, beneficiaries maintain the ability to dispute charges or file an appeal for a claim under the FFS program. The Shared Savings Program does not change any FFS beneficiary choices or benefits.

Comment: Several commenters appeared to believe that CMS does not have a reconsideration review process, stating that the lack of one is a violation of due process and that CMS should provide ACOs with a reconsideration process to challenge determinations. Finally, a few commenters objected to the statutory requirement to preclude administrative and judicial review of certain determinations under the program.

Response: As discussed earlier, we have established appeals procedures for the Shared Savings Program at 42 CFR part 425, subpart I. To the extent the commenters are concerned about the absence of administrative review for certain determinations, we note that section 1899(g) of the Act expressly precludes administrative and judicial review of these determinations, and as a result, we do not have the authority to offer administrative review for these determinations.

FINAL ACTION: We are finalizing our proposal at § 425.802 to permit only on-the-record reviews of reconsideration requests. Additionally, we are finalizing our proposal at § 425.804(a)(3) that the reconsideration review process permits the ACO and CMS to submit one brief each in support of its position by the deadline established by the CMS reconsideration official. Also, based on comments and a desire to ensure that the reconsideration official has the information necessary to make a determination, we will include in § 425.804(a)(3) that submission of additional briefs or evidence is at the sole discretion of the reconsideration official.

5. Monitoring ACO Compliance With Quality Performance Standards

We proposed a technical revision to § 425.316(c) to clarify our administrative enforcement authority when ACOs fail to meet the quality reporting requirements. Specifically, we proposed to remove § 425.316(c)(3), which sets forth various required actions the ACO must perform if it fails to report one or more quality measures or fails to report completely and accurately on all measures in a domain. We also proposed to remove § 425.316(c)(4), which sets forth the administrative action we may take against an ACO if it exhibits a pattern of inaccurate or incomplete reporting of quality measures or fails to make timely corrections following notice to resubmit. The actions identified in § 425.316(c)(3) and (4) include request for missing or corrected information, request for a written explanation for the noncompliance, and termination. All of these actions are already authorized under § 425.216 and § 425.218. Therefore, to reduce redundancy, prevent confusion, and to streamline our regulations, we proposed to modify § 425.316(c) to remove § 425.316(c)(3) and (c)(4).

In addition, we proposed a technical change to § 425.316(c)(5), which currently provides that an ACO ''will not qualify to share in savings in any year it fails to report fully and completely on the quality performance measures.'' We proposed to redesignate this paragraph as § 425.316(c)(3) and replace ''fully and completely'' with ''accurately, completely, and timely'' to align with § 425.500(f) and to emphasize the importance of timely submission of measures.

Comment: A few commenters supported the proposals, noting they would provide consistency within the program. A commenter requested that CMS clearly articulate what standards would apply to determine whether an ACO failed to accurately, completely, and timely report the quality measures.

Response: We appreciate the commenters' support for the proposed revisions to our regulatory language regarding requirements for accurate, complete, and timely submission of quality measures. We have provided clear guidance on an ACO's obligation to accurately, completely and timely report quality measures. We publish the annual deadlines for submitting quality measures and remind ACOs of the deadlines frequently. Additionally, we provide helpdesk support and hold daily support calls during the first and last weeks of the 8-week quality reporting submission period, and we hold weekly support calls during the 6 weeks in between. The support calls give ACOs an opportunity to inquire about each measure to make sure they understand how to report accurately and completely. We publish the submission deadline in advance of the submission period, announce it on support calls, and remind ACOs in emails, list serve postings, and weekly newsletter articles.

To meet the quality performance standard in PY1, the ACO must report

quality measures ''completely, accurately, and timely.'' In PY2 and PY3, the ACO must continue to report quality measures ''completely, accurately, and timely'' and must also meet minimum attainment on at least one pay-for-performance measure in each domain. Meeting the quality performance standard qualifies an ACO to share in savings for the performance year. As articulated in section II.C.3. of this final rule, we evaluate an ACO's participation agreement renewal request on whether the ACO met the quality performance standards during at least 1 of the first 2 years of the previous agreement period.

FINAL ACTION: We are finalizing our proposals without change. Specifically, we are removing redundant sections of the regulation text (§ 425.316(c)(3) and (c)(4)). We are also finalizing our proposal to redesignate § 425.316(c)(5) as § 425.316(c)(3), and to make changes to indicate the ACO must report ''accurately, completely, and timely'' to emphasize the importance of timely submission of measures and to conform to language elsewhere in the program rules.

III. Collection of Information Requirements

As stated in section 3022 of the Affordable Care Act, Chapter 35 of title 44, United States Code, shall not apply to the Shared Savings Program. Consequently, the information collection requirements contained in this final rule need not be reviewed by the Office of Management and Budget.

IV. Regulatory Impact Analysis

A. Statement of Need

This final rule is necessary in order to make payment and policy changes to the Medicare Shared Savings Program established under section 1899 of the Act. The Shared Savings Program promotes accountability for a patient population, fosters the coordination of items and services under Parts A and B, and encourages investment in infrastructure and redesigned care processes for high quality and efficient service delivery.

B. Overall Impact

We examined the impacts of this rule as required by Executive Order 12866 on Regulatory Planning and Review (September 30, 1993), Executive Order 13563 on Improving Regulation and Regulatory Review (January 18, 2011), the Regulatory Flexibility Act (RFA) (September 19, 1980, Pub. L. 96–354), section 1102(b) of the Social Security Act, section 202 of the Unfunded Mandates Reform Act of 1995 (March 22, 1995; Pub. L. 104–4), Executive Order 13132 on Federalism (August 4, 1999) and the Congressional Review Act (5 U.S.C. 804(2)).

Executive Orders 12866 and 13563 direct agencies to assess all costs and benefits of available regulatory alternatives and, if regulation is necessary, to select regulatory approaches that maximize net benefits (including potential economic, environmental, public health and safety effects, distributive impacts, and equity). Section 3(f) of Executive Order 12866 defines a ''significant regulatory action'' as an action that is likely to result in a rule: (1) Having an annual effect on the economy of $100 million or more in any 1 year, or adversely and materially affecting a sector of the economy, productivity, competition, jobs, the environment, public health or safety, or state, local or tribal governments or communities (also referred to as ''economically significant''); (2) creating a serious inconsistency or otherwise interfering with an action taken or planned by another agency; (3) materially altering the budgetary impacts of entitlement grants, user fees, or loan programs or the rights and obligations of recipients thereof; or (4) raising novel legal or policy issues arising out of legal mandates, the President's priorities, or the principles set forth in the Executive Order.

A regulatory impact analysis (RIA) must be prepared for major rules with economically significant effects ($100 million or more in any 1 year). We estimate that this rulemaking is ''economically significant'' as measured by the $100 million threshold, and hence also a major rule under the Congressional Review Act. Accordingly, we have prepared a Regulatory Impact Analysis, which to the best of our ability presents the costs and benefits of the rulemaking.

C. Anticipated Effects

1. Effects on the Medicare Program

The Shared Savings Program is a voluntary program involving an innovative mix of financial incentives for quality of care and efficiency gains within FFS Medicare. As a result, the changes to the Shared Savings Program being adopted in this final rule could result in a range of possible outcomes. In the November 2011 final rule (76 FR 67904), we indicated that participation in Track 1 might enable ACOs to gain the experience necessary to take on risk in a subsequent agreement period under a two-sided arrangement, possibly enhancing the opportunity for greater program savings in years beyond the first agreement period. Conversely, if in that first agreement period, ACOs come to reliably predict a bias between expenditure benchmarks and actual assigned beneficiary costs that ensures an outcome—whether favorable or unfavorable—the program would be at risk for increasingly selective participation from favored ACOs and any real program savings could be overwhelmed by outsized shared-savings payments (76 FR 67964). Furthermore, even ACOs that opt for a two-sided arrangement could eventually terminate their agreements if they anticipate that efforts to improve efficiency are overshadowed by their particular market circumstances. This scenario could also contribute to selective program participation by ACOs favored by the national flat-dollar growth target, or favored by other unforeseen biases affecting performance.

However, as we indicated in the November 2011 final rule (76 FR 67964), even with the optional liability for a portion of excess expenditures, which offers less incentive to reduce growth in costs than a model involving full capitation, the opportunity to share in FFS Medicare savings still represents an incentive for efficiency. The actual effects of shared savings (and potential liabilities in the form of shared losses) will have varying degrees of influence on hospitals, primary care physicians, specialty physicians, and other providers and suppliers. Moreover, while certain care improvements might be achieved relatively quickly (for example, prevention of hospital readmissions and emergency-room visits for certain populations with chronic conditions), some ACOs might need more than 3 years to achieve comprehensive efficiency gains. As of January 2015, over 400 organizations have chosen to participate in the Shared Savings Program. These organizations care for over 7 million assigned FFS beneficiaries living in 47 states, plus Puerto Rico and the District of Columbia. Half of all ACOs characterize themselves as networks of individual practices and the other half include hospitals or facilities. In the fall of 2014, we announced the final financial reconciliation and quality performance results for performance year 1 for ACOs with 2012 and 2013 agreement start dates. ACOs outperformed other FFS providers that reported data on 17 out of 22 GPRO quality measures. ACOs that reported quality in both 2012 and 2013 also improved on 30 out of 33 quality measures.

Of the 220 ACOs with 2012 and 2013 start dates, 58 ACOs generated shared savings during their first performance year. They held spending $705 million below their targets and earned shared savings payments of more than $315 million as their share of program savings. One ACO in Track 2 overspent its target by $10 million and owed shared losses of $4 million. Total net savings to Medicare is close to $383 million, including repayment of shared losses by one Track 2 ACO. An additional 60 ACOs reduced growth in health costs compared to their benchmark, but did not qualify for shared savings, as they did not meet the minimum savings threshold.

While evaluation of the program's overall impact is ongoing, the performance year 1 final financial reconciliation and quality results are within the range originally projected for the program's first year. Also, at this point, we have seen no evidence of systematic bias in ACO participation or performance that would raise questions about the savings that have been achieved.

Earlier in this final rule, we discussed changes in policy that are intended to better encourage ACO participation in performance risk-based models by:

- Easing the transition from Track 1 to Track 2.
- Providing refinements to Track 2.
- Adopting a new performance risk-based model with greater reward —Track 3.

Currently, an ACO will be able to apply to participate in Track 1 for its initial agreement period during which the ACO could be eligible for shared savings payments in all 3 performance years of the agreement period without the risk of being responsible for repayment of any losses if actual expenditures exceed the benchmark. However, rather than requiring all Track 1 ACOs to transition to a performance risk-based model in their second agreement period, as is currently required, we are improving the transition from the shared-savings only model to a performance risk-based model for Track 1 ACOs that might require additional experience with the program before taking on performance-based risk. Specifically, in this final rule, we are specifying that Track 1 ACOs may elect to continue participation under Track 1 for a subsequent agreement period at the same sharing rate as under the first agreement period provided they meet the general criteria established for an ACO to renew its 3-year participation agreement.

Under Track 2, which provides an opportunity for an ACO to receive a higher percentage of shared savings for all years of the agreement period, but with potential liability for shared losses in each of the agreement years if annual expenditures exceed the benchmark, we are providing the opportunity for ACOs to have some choice in the level of risk. Specifically, in this final rule, we are finalizing a policy that will permit an ACO in a two-sided performance risk track to choose its MSR and MLR from a range of options, so long as they are symmetrical. We believe this modification will enable ACOs to choose a level of risk with which they are comfortable and encourage ACOs to move more quickly to performance-based risk.

We are also establishing an additional performance risk-based option (Track 3) that offers a higher maximum shared savings percentage (75 percent) and performance payment limit (20 percent) than is available under Track 2 (60 percent and 15 percent respectively), and a cap on the amount of losses for which an ACO is liable that is fixed at 15 percent of its updated benchmark in each year. Similar to ACOs in Track 2, ACOs in Track 3 will be able to choose from a menu of symmetrical MSR/MLR levels. Also, under this model, beneficiaries will be assigned prospectively so an ACO will know in advance those beneficiaries for which it will be responsible.

We are finalizing a policy for resetting ACO benchmarks for a subsequent agreement period under which we will weight each benchmark year equally (approximately 33.3 percent for each year). We will also take into account the financial performance of the ACO from the prior agreement period when resetting the benchmark. If an ACO generated net savings over the previous agreement period, we will make an adjustment to the new benchmark to account for those savings.

As detailed in Table 9, we estimated at baseline (that is, without the changes detailed in this final rule) a total aggregate median impact of $540 million in net federal savings for calendar years (CYs) 2016 through 2018 from the continued operation of the Shared Savings Program for ACOs electing a second agreement period starting in January 2016. The 10th and 90th percentiles of the estimate distribution, for this same time period, yield a net savings of $340 million and $800 million, respectively. These estimated impacts represent the effect on federal transfers of payments to Medicare providers and suppliers. The median estimated federal savings are higher than the estimate of the program effects over the preceding CYs 2012 through 2015 published in the previous final rule (estimated median net savings of $470 million for such 4 year period). This increase in savings is due to multiple factors related to maturation of the program, including continued phase-in of assumed savings potentials, lowered effective sharing rates due in part to rebased benchmarks, and increased collection of shared losses due to mandatory enrollment in Track 2 in a second agreement period. However, absent changes to improve the viability of participation for ACOs considering a second agreement period, we estimate fewer than 15 percent of ACOs would opt for continued participation under downside risk in Track 2 as required under the current regulations. We note that this estimate was revised downward from 25 percent in the December 2014 proposed rule based on emerging program experience (for example, assumptions for renewals and first-time applicants were revised in light of additional data provided by the 2015 start date). The decrease in the baseline median net savings previously estimated at $730 million in the proposed rule is directly related to the revision to this estimate. Furthermore, we estimated up to half of such re-enrolling ACOs would ultimately drop out of the program by 2018 to avoid future shared loss liability.

Alternatively, as detailed in Table 10, by including the changes detailed in this final rule, the total aggregate median impact would increase to $780 million in net federal savings for CYs 2016 through 2018. The tenth and ninetieth percentiles of the estimate distribution, for the same time period, yield net savings of $230 million and $1,430 million, respectively. Such median estimated federal savings are $240 million greater than the $540 million median net savings estimated at baseline absent the finalized changes. A key driver of an anticipated increase in net savings is through improved ACO participation levels in a second agreement period. We estimate that at least 90 percent of eligible ACOs will renew their participation in the Shared Savings Program if presented with the new options, primarily under Track 1 and, to a lesser extent, under Track 3. This expansion in the number of ACOs willing to continue their participation in the program is estimated to result in additional improvements in care efficiency of a magnitude significantly greater than the reduced shared loss receipts estimated at baseline (median shared loss dollars reduced by $20

million relative to baseline) and the added shared savings payments flowing from a higher sharing rate in Track 3 and continued one-sided sharing available in Track 1, with all three tracks operating under more favorable rebasing parameters including equal base year weighting and adding a portion of savings from the prior agreement period to the baseline (median shared savings payments increased by $970 million relative to baseline). Because final rule estimates reflect revised participation assumptions including lower Track 2 participation at baseline (as noted previously), the difference in shared loss receipts from baseline is revised downward from the $140 million estimated in the proposed rule.

With respect to costs incurred by ACOs, as discussed later in this section, for purposes of this analysis, we are retaining our assumption included in our November 2011 final rule (76 FR 67969) of an average of $0.58 million for start-up investment costs but are revising our assumption for average ongoing annual operating costs for an ACO participating in the Shared Savings Program to $0.86 million, down from the $1.27 million assumed in our November 2011 final rule (76 FR 67969). This revision is related to the lower average number of beneficiaries currently observed to be assigned to existing Shared Savings Program ACOs compared to the larger organizations participating in the Physician Group Practice Demonstration upon which the original assumption was based. We also believe the changes we are making in this final rule to streamline the administrative requirements for the program will further assist in lowering administrative costs.

For our analysis, we are comparing the effects of the changes being adopted in this final rule for a cohort of ACOs that either continued their participation in the Shared Savings Program, beginning in 2016 or newly begin their participation in that same year. For purposes of our analysis, we assumed that roughly one-quarter of ACOs will incur aggregate start-up investment costs in 2016, ranging from $12 million under the baseline scenario to $58 million under the policies being adopted in this final rule. Aggregate-ongoing operating costs are estimated to range from $43 million under the baseline scenario to $258 million under the policies adopted in this final rule. Both start-up investment and ongoing operating cost ranges assume an anticipated average participation level of 50 (baseline scenario) to 300 (with all changes) new or currently participating ACOs that establish or renew participation agreements in 2016. For purposes of this analysis, we assumed that some portion of ACOs currently participating in the program will not renew their participation agreement for a subsequent agreement period. As a result, under our baseline scenario, we assumed 50 ACOs will either renew or begin an agreement period in 2016—far fewer than the nearly 100 new ACOs that have entered the program in each of the last 2 years. The 3-year aggregate ongoing operating cost estimate also reflects our assumption that, under the baseline scenario, there would be a greater propensity for ACOs that have completed the full term of their initial agreement period, and that would be required to participate under Track 2 in their second agreement period, to drop out of the program after receiving poor results from their final settlement for the first performance year under Track 2 in the new agreement period. Therefore, as illustrated in Table 9 for the baseline scenario, for CYs 2016 through 2018, total median ACO shared savings payments of $160 million offset by $50 million in shared losses coupled with the aggregate average start-up investment and ongoing operating cost of $129 million result in an estimated net private cost of $19 million. Alternatively, as illustrated in Table 10 for the all changes scenario, for CYs 2016 through 2018 the total median ACO shared savings payments of $1,130 million, offset by $30 million in shared losses, coupled with the aggregate average start-up investment and ongoing operating costs of $822 million, result in an estimated net private benefit of $278 million. Under the changes we are adopting in this final rule, ACOs are no longer required to move to a two-sided performance-based risk model in their second agreement period. As a result of this change and the other changes we are making in this final rule, the per-ACO average shared loss liability is reduced by 90 percent compared to the baseline. Therefore, the changes will likely prevent a significant number of ACOs that are due to renew their participation agreements in 2016 from leaving the program prior to 2018.

By encouraging greater Shared Savings Program participation, the changes in this rule will also benefit beneficiaries through broader improvements in accountability and care coordination than would occur under current regulations. Accordingly, we have prepared a regulatory impact analysis (RIA) that to the best of our ability presents the costs and benefits of this final rule.

TABLE 9—BASELINE (ABSENT ALL CHANGES) ESTIMATED NET FEDERAL SAVINGS, COSTS AND BENEFITS, CYS 2016 THROUGH 2018

	CY 2016 (million)	CY 2017 (million)	CY 2018 (million)	CYs (2016-2018) (million)
Net Federal Savings:				
10th Percentile	$180	$130	$20	$340
Median	270	200	60	540
90th Percentile	380	290	120	800
ACO Shared Savings:				
10th Percentile	20	30	40	100
Median	30	50	70	160
90th Percentile	50	80	110	230
ACO Shared Losses:				
10th Percentile	10	10	0	30
Median	20	30	0	50
90th Percentile	30	40	10	80

TABLE 9—BASELINE (ABSENT ALL CHANGES) ESTIMATED NET FEDERAL SAVINGS, COSTS AND BENEFITS, CYS 2016 THROUGH 2018—Continued

	CY 2016 (million)	CY 2017 (million)	CY 2018 (million)	CYs (2016-2018) (million)
Costs	The estimated aggregate average start-up investment and 3-year operating costs is $129 million. The total estimated start-up investment costs average $12 million, with ongoing costs averaging $43 million, for the anticipated mean baseline participation of 50 ACOs.			
Benefits	Improved healthcare delivery and quality of care and better communication to beneficiaries through patient-centered care.			

Note that the percentiles for each individual year do not necessarily sum to equal the corresponding percentiles estimated for the total 3-year impact, in the column labeled CYs 2016 through 2018, due to the annual and overall distributions being constructed independently.

TABLE 10—ESTIMATED NET FEDERAL SAVINGS, COSTS AND BENEFITS UNDER THIS FINAL RULE CYS 2016 THROUGH 2018

	CY 2016 (million)	CY 2017 (million)	CY 2018 (million)	CYs (2016-2018) (million)
Net Federal Savings:				
10th Percentile	$80	$100	$30	$230
Median	250	290	240	780
90th Percentile	440	510	480	1,430
ACO Shared Savings:				
10th Percentile	260	300	390	960
Median	300	360	470	1,130
90th Percentile	360	420	550	1,310
ACO Shared Losses:				
10th Percentile	0	10	0	10
Median	10	20	0	30
90th Percentile	20	30	10	50
Costs	The estimated aggregate average start-up investment and 3-year operating costs is $822 million. The total estimated start-up investment costs average $58 million, with ongoing costs averaging $258 million, for the anticipated mean participation of 300 ACOs.			
Benefits	Improved healthcare delivery and quality of care and better communication to beneficiaries through patient-centered care.			

Note that the percentiles for each individual year do not necessarily sum to equal the corresponding percentiles estimated for the total 3-year impact in the column labeled CYs 2016 through 2018, due to the annual and overall distributions being constructed independently. Also, the cost estimates for this table reflect our assumptions for increased ACO participation as well as changes in the mix of new and continuing ACOs.

There remains uncertainty as to the number of ACOs that will continue to participate in the program, provider and supplier response to the financial incentives offered by the program in the medium and long run, and the ultimate effectiveness of the changes in care delivery that may result as ACOs work to improve the quality and efficiency of patient care. These uncertainties continue to complicate efforts to assess the financial impacts of the Shared Savings Program and result in a wide range of potential outcomes regarding the net impact of the changes in this final rule on Medicare expenditures.

To best reflect these uncertainties, we continue to utilize a stochastic model that incorporates assumed probability distributions for each of the key variables that will affect the overall financial impact of the Shared Savings Program. Using a Monte Carlo simulation approach, the model randomly draws a set of specific values for each variable, reflecting the expected covariance among variables, and calculates the program's financial impact based on the specific set of assumptions. We repeated the process for a total of 10,000 random trials, tabulating the resulting individual cost or savings estimates to produce a distribution of potential outcomes that reflects the assumed probability distributions of the incorporated variables, as shown in Table 10. In this way, we can evaluate the full range of potential outcomes based on all combinations of the many factors that will affect the financial impact, and with an indication of the likelihood of these outcomes. It is important to note that these indications do not represent formal statistical probabilities in the usual sense, since the underlying assumptions for each of the factors in the model are based on reasonable judgments, using independent expert opinion when available.

The median result from the distribution of simulated outcomes represents the ''best estimate'' of the financial effect of the changes to the Shared Savings Program. The full distribution illustrates the uncertainty surrounding the mean or median financial impact from the simulation.

The median estimate reflects the net effects of—

- Reduced actual Medicare expenditures due to more efficient care;
- Shared savings payments to ACOs; and
- Payments to CMS for shared losses when actual expenditures exceed the

benchmark. That median indicates that the policies finalized in this rule will result in a projected total of $780 million in net savings over CYs 2016 through 2018, or $240 million greater than the median projected total at baseline without the changes being adopted in this final rule.

This net federal savings estimate, detailed at the top of Table 10, can be summed with the projected ACO shared savings less projected ACO shared losses—both also detailed in Table 10—to show the median expected effect on Medicare claim expenditures before accounting for shared savings payments (that is, the reduction in actual Medicare expenditures due to more efficient care).

A net savings (cost) occurs when payments of earned and unearned shared savings (less shared losses collected) resulting from: (1) Reductions in spending; (2) care redesign; and (3) normal group claim fluctuation, in total are less than (greater than) assumed savings from reductions in expenditures.

As continued emerging data become available on the differences between actual expenditures and the target expenditures reflected in ACO benchmarks, it may be possible to evaluate the financial effects with greater certainty. The estimate distribution shown in Table 11 provides an objective and reasonable indication of the likely range of financial outcomes, given the chosen variables and their assumed distributions at this time in the program's operation.

a. Assumptions and Uncertainties

We continue to rely on input gathered as part of the analysis for the existing regulation from a wide range of external experts, including credentialed actuaries, consultants, and academic researchers, to identify the pertinent variables that could determine the efficacy of the program, and to identify the reasonable ranges for each variable. We also continue to monitor emerging evidence from current participation in this program, the Pioneer ACO Model, and related published evidence where available.

There are a number of factors that are not fully reflected in our current modeling that may refine our modeling in future rulemaking:

- Number of participating ACOs, including the sensitivity to burdens of participation and the generosity of the sharing arrangement.
- Size mix of participating ACOs.
- Type of ACO that would consider accepting risk.
- Participating ACOs' current level of integration and preparedness for improving the quality and efficiency of care delivery.
- Baseline per-capita costs for ACOs, relative to the national average.
- Number and profile of providers and suppliers available to participate in the Shared Savings Program as a result of Innovation Center model initiatives.
- Range of gross savings achieved by ACOs, and the time required for full phase-in.
- Local variation in expected claims cost growth relative to the national average.
- Quality reporting scores and resulting attained sharing (or loss) percentages.
- Potential ''spillover'' effects between the Shared Savings Program and other value-based incentive programs implemented by CMS and other payers.

We assumed that overall between 0.8 million Medicare beneficiaries (under baseline) and 4.7 million Medicare beneficiaries (with all changes) would annually be assigned to between 50 and 300 ACOs beginning a new agreement period in 2016. Given data on current participation, we anticipate the program will continue to garner comparable levels of participation from markets exhibiting baseline per-capita FFS expenditures above, at, or below the national average. In addition, we assumed the level of savings generated by an ACO to positively correlate to its achieved quality performance score and resulting sharing percentage.

For estimating the impact of the changes, we assume that most ACOs (approximately 9 out of 10, on average) will choose Track 1. This is because the ACOs will seek to simultaneously: (1) Avoid the potential for financial loss if expenditures experience a significant upward fluctuation or efficiency improvements are less effective than planned; and (2) continue to build organizational experience to achieve a per-capita cost target as determined under the program's benchmark methodology.

In contrast, we assume that a minority of ACOs—disproportionately represented from a more capable subset of the total program participation—will opt for Track 3 in their second agreement period. These ACOs will be enabled by experience accepting risk or achieving success or both in their first agreement period in this program, and motivated by the provision for prospective assignment of beneficiaries and the greater sharing percentage available under this new option. A particularly important cause for uncertainty in our estimate is the high degree of variability observed for local per-capita cost growth rates relative to the national average ''flat dollar'' growth (used to update ACO benchmarks). Performance measured against the benchmark or expenditure target effectively serves as the chief measure of efficiency for participating ACOs. Factors such as lower-than-average baseline per-capita expenditure and variation in local growth rates relative to the national average can trigger shared savings payments even in the absence of any efficiency gains. Similarly, some ACOs could find that factors, such as prevailing per-capita expenditure growth in their service area that is higher than the national average, limit efficiency gains and reduce or prevent shared savings.

b. Detailed Stochastic Modeling Results

Table 11 shows the distribution of the estimated net financial impact for the 10,000 stochastically generated trials under the policies being adopted in this final rule. (The amounts shown are in millions, with negative net impacts representing Medicare savings). The net impact is defined as the total cost of shared savings less—(1) Any amount of savings generated by reductions in actual expenditures; and (2) any shared losses collected from ACOs that accepted risk and have actual expenditures exceeding their benchmark.

The median estimate of the Shared Savings Program financial impact for ACOs potentially entering a second agreement period in calendar years 2016 through 2018 is a net federal savings of $780 million, which is $240 million higher than our estimate for the same period assuming a baseline scenario, which excludes the changes adopted in this final rule. This amount represents the ''best estimate'' of the financial impact of the Shared Savings Program during the applicable period. However, it is important to note the relatively wide range of possible outcomes. While over 97 percent of the stochastic trials resulted in net program savings, the 10th and 90th percentiles of the estimated distribution show net savings of $230 million to net savings of $1,430 million, respectively. In the extreme maximum and minimum scenarios, the results were as large as $2.7 billion in savings or nearly $500 million in costs, respectively.

The stochastic model and resulting financial estimates were prepared by the CMS Office of the Actuary (OACT). The median result of $780 million in savings is a reasonable ''point estimate'' of the impact of the Shared Savings Program

during the period between 2016 and 2018 and reflects the changes being adopted in this final rule. However, we emphasize the possibility of outcomes differing substantially from the median estimate, as illustrated by the estimate distribution. As we analyze additional data on ACO performance in the first agreement period, we may likely improve the precision of future financial impact estimates.

To the extent that the Shared Savings Program will result in net savings or costs to Part B of Medicare, revenues from Part B beneficiary premiums would also be correspondingly lower or higher. In addition, because MA payment rates depend on the level of spending within traditional FFS Medicare, savings or costs arising from the Shared Savings Program would result in corresponding adjustments to MA payment rates. Neither of these secondary impacts has been included in the analysis shown.

TABLE 11—STOCHASTIC DISTRIBUTION FOR THE ESTIMATED NET SAVINGS (–) OR COSTS (+) FOR CHANGES ADOPTED IN THIS FINAL RULE, CYs 2016 THROUGH 2018

($ millions)

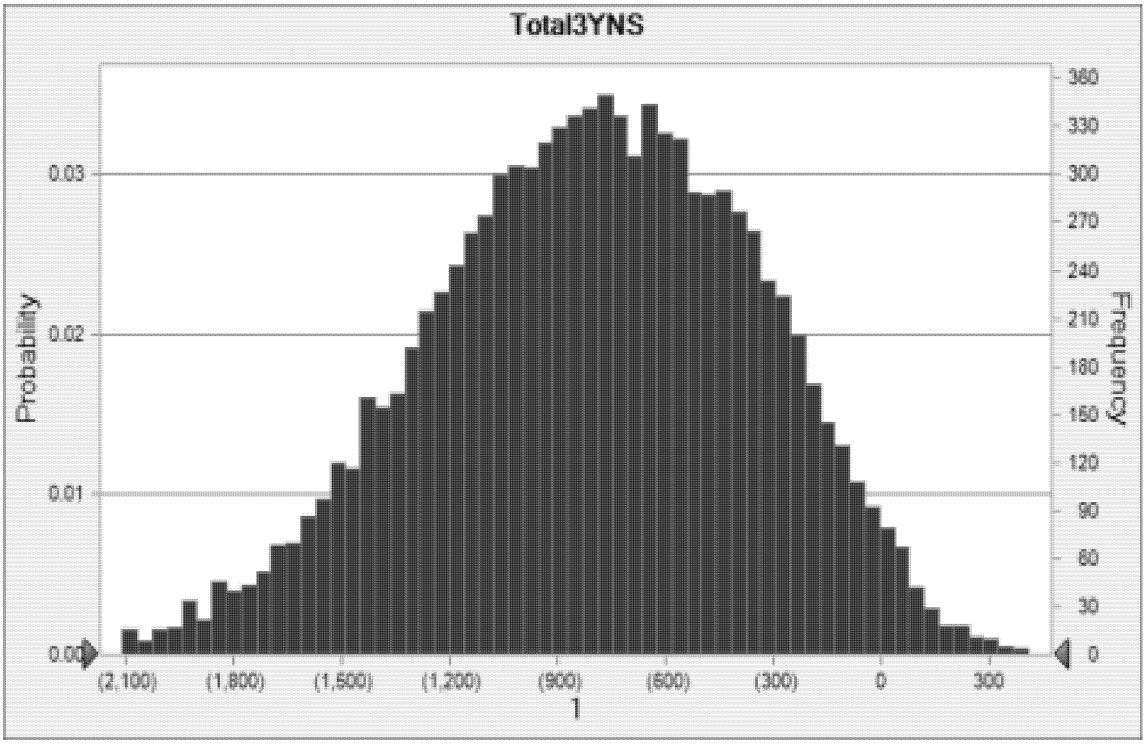

Table 12 shows the median estimated financial effects for the Shared Savings Program of ACOs entering in a new agreement period starting in 2016 and the associated 10th and 90th percentile ranges under the changes adopted in this final rule. Net savings (reflecting a net reduction in federal outlays) are expected to moderately contract over the 3-year period, from a median of $250 million in 2016 to $240 million in 2018. This progression is related to the maturation of efficiencies achieved by renewing ACOs contrasted by progressive increases in shared savings payments due to increasing variability in expenditures in later performance years relative to a static benchmark expenditure baseline. To similar effect, the potential that Track 3 ACOs experiencing losses may elect to voluntarily terminate their participation in the program could work to decrease net savings in the last year of the period relative to prior years. We note that the percentiles are tabulated for each year separately. Therefore, the overall net impact distribution (Table 10) will not necessarily exactly match the sum of distributions for each distinct year.

TABLE 12—STOCHASTIC DISTRIBUTION FOR ESTIMATED FEDERAL NET SAVINGS (–) OR COSTS (+) FOR CHANGES ADOPTED IN THIS FINAL RULE, CYs 2016 THROUGH 2018

($ millions)

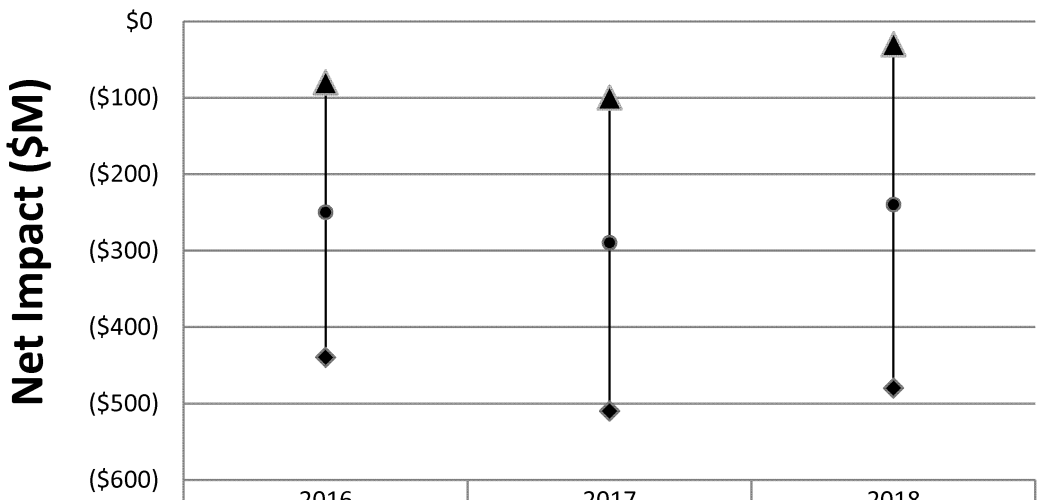

	2016	2017	2018
◆ 90th %-ile	($440)	($510)	($480)
● median	($250)	($290)	($240)
▲ 10th %-ile	($80)	($100)	($30)

c. Further Considerations

The impact analysis shown is only for the 3 years 2016 through 2018 corresponding to the second agreement period potentially available for the nearly 220 ACOs that will complete their first agreement period in 2015. Additional ACOs entered the program on January 1 of 2014 and 2015, totaling 123 and 89 new ACOs, respectively, and these ACOs would potentially be eligible to start a second agreement period beginning in 2017 or 2018. For all current participating groups of ACOs, uncertainties exist regarding their continued engagement with program goals and incentives, especially for ACOs who fail to generate shared savings revenue comparable to the cost of effective participation in the program. It is possible that, notwithstanding the enhancements adopted in this final rule, a significant drop-off in participation could materialize from ACOs failing to achieve significant revenue from shared savings in the short run. On the other hand, the Medicare Access and CHIP Reauthorization Act of 2015 may influence additional ACO formation in order for physicians to receive maximum updates under future physician fee schedule updates. Independent of this recent legislation, value-based payment models are showing significant growth with arrangements being offered by state Medicaid programs, private insurers, and employer-sponsored plans. Moreover, we would also note that the number of providers and suppliers participating in these models and in the existing ACOs continues to grow. Therefore, providers may view continued participation in this program as part of a wider strategy for care redesign rather than be driven only by the potential for receiving incentives in the form of shared savings payments from the Medicare Shared Savings Program. Therefore, there remains a potential for broad gains in efficiency and quality of care delivery across all populations served by ACOs participating in the Shared Savings Program with possible additional ''spillover'' effects on federal savings potentially traceable to momentum originally created by this program. The stochastic model for estimating future program impacts starting in 2016 does not incorporate either of these divergent longer-run scenarios, but both remain possibilities. An impact estimate expanded to include performance beyond the 2016 through 2018 agreement period would likely entail a significantly wider range of possible outcomes. However, additional emerging results of the first performance cycle will help inform estimates of the ongoing financial effects of the Shared Savings Program.

2. Effects on Beneficiaries

This program is still in the early stages of implementation. However, we continue to believe that the Shared Savings Program will benefit beneficiaries because the intent of the program is to—

- Encourage providers and suppliers to join together to form ACOs that will be accountable for the care provided to an assigned population of Medicare beneficiaries;
- Improve the coordination of FFS items and services; and
- Encourage investment in infrastructure and redesigned care processes for high quality and efficient service delivery that demonstrates a dedication to, and focus on, patient-

centered care that results in higher quality care.

The benefits of a payment model that encourages providers and suppliers to become accountable for the overall care furnished to Medicare beneficiaries were evidenced by the PGP demonstration, upon which many features of the Shared Savings Program are based. Under the PGP demonstration, all of the PGP participants achieved improvements in their scores for most of the quality measures over time. While only 2 PGP participants met all 10 quality measure targets active in their 1st performance year, by the 5th performance year, 7 sites met all 32, or 100 percent of their targets, and the remaining 3 PGP participants met over 90 percent of the targets. More specifically, as we previously discussed in our November 2011 final rule (76 FR 67968), over the first 4 years of the PGP Demonstration, physician groups increased their quality scores an average of 10 percentage points on the 10 diabetes measures, 13 percentage points on the 10 congestive heart failure measures, 6 percentage points on the 7 coronary artery disease measures, 9 percentage points on the 2 cancer screening measures, and 3 percentage points on the 3 hypertension measures. Further analysis is provided in the Physician Group Practice Demonstration Evaluation Report (Report to Congress, 2009; *http://www.cms.gov/DemoProjectsEvalRpts/downloads/PGP_RTC_Sept.pdf*).

As we have also discussed in November 2011 final rule (76 FR 67968), in addition to the overall increases in quality scores, we can examine the impact of the PGP Demonstration on quality by comparing the values of the seven claims-based quality measures for each PGP site and its comparison group. Our analysis found that, on the claims-based measures, PGP performance exceeded that of the comparison groups (CGs) on all measures between the base year (BY) and performance year 2 (PY2). It also found that the PGP sites exhibited more improvement than their CGs on all but one measure between the BY and PY2. Even after adjusting for pre-demonstration trends in the claims-based quality indicators, the PGP sites improved their claims-based quality process indicators more than their comparison groups.

Further, for the first year of the Pioneer ACO Model, all 32 Pioneer ACOs successfully reported quality measures and achieved the maximum quality score for complete and accurate reporting, earning incentive payments for their reporting accomplishments. Overall, Pioneer ACOs performed better than published rates in FFS Medicare for all 15 clinical quality measures for which comparable data are available. In the second year of the Pioneer ACO Model, organizations increased the mean quality score by 19 percent and showed improvement on 28 of the 33 quality measures. Some of these measures included controlling high blood pressure, screening for future fall risk, screening for tobacco use and cessation, and patient experience in health promotion and education. The Pioneer ACOs improved the average performance score for patient and caregiver experience in 6 out of 7 measures.

The Independent Office of the Actuary in the Centers for Medicare & Medicaid Services (CMS) has certified that the Pioneer ACO Model, as tested in its first 2 performance years, meets the criteria for expansion to a larger population of Medicare beneficiaries.

Additionally, under the Shared Savings Program, almost all participating ACOs fully and completely reported quality measures for the 2013 reporting period, providing important information on current performance that can be used to improve patient engagement and make meaningful positive impacts on patient care.

In addition to the early quality data generated by participating organizations, we have anecdotal evidence that illustrates the importance of encouraging participation in the Shared Savings Program. For example, ACO providers/suppliers report very meaningful changes in patient engagement through beneficiary participation on the governing body of the ACO and on patient advisory committees. In response to beneficiary input, clinical practices are offering extended office hours, including weekend hours, and ensuring timely appointments and access to clinical staff. Using the data shared by CMS, ACOs are able to identify high risk beneficiaries that require additional clinical attention, assign case managers, and actively work to improve care for these beneficiaries. One ACO reported that it has implemented a process for performing in-home medication reconciliation and review of care plans as a follow up to hospital discharge and for one-third of those patients, discovered an intervention that avoided an unnecessary hospital readmission. Active identification and management of these patients has uncovered previously unaddressed issues that factored into patient inability to adhere to treatment plans. For example, an ACO reported that it has uncovered several psycho-social issues that were resulting in avoidable readmissions such as the Inability to self-medicate (the ACO arranged for home health services) and inadequate Access to healthy food resources (the ACO worked with community stakeholders to have meals delivered to the patient's home).

Additionally, ACOs are using claims data to identify diagnoses prevalent in the assigned population and develop best practice guidelines for those conditions, and educating and alerting ACO participants and ACO providers/suppliers to standardize care processes and improve outcomes.

We expect that the changes in this final rule, specifically those easing administrative requirements, smoothing the transition to a performance risk-based model, and expanding opportunities to share in a higher level of savings will encourage greater program participation by ACOs, which will in turn increase the number of beneficiaries that can potentially benefit from high quality and more coordinated care. Nonetheless, this program does not affect beneficiaries' freedom of choice regarding which providers and suppliers they see for care since beneficiaries assigned to an ACO continue to be in the traditional Medicare program. Thus, beneficiaries may continue to choose providers and suppliers that do not participate in ACOs under the Shared Savings Program.

3. Effect on Providers and Suppliers

Based on discussions with ACOs that generated shared savings and demonstrated high quality care during their first performance year in the Shared Savings Program, we know that ACOs are busy implementing a variety of strategies designed to improve care coordination for beneficiaries and lower the rate of growth in expenditures. Most of these ACOs consider themselves to be ''physician-based'' organizations, rather than ''hospital-based'', although many state that a strong collaboration between inpatient and outpatient facilities is critical to better care coordination across sites of care. ACOs detailed several strategies that they believe were important such as careful pre-participation planning, transparency between the ACO leadership and its ACO participants and ACO providers/suppliers, education of ACO providers/suppliers regarding the ACO's care processes, strong physician leadership, and working to streamline and transform practices for highly efficient coordinated care across sites of care. Several clinicians in ACOs have reported to us that the ACO is providing them with the support and structure

needed to practice ''how [they] always hoped [they] could.'' All of these ACOs recognize that they are early in the process of implementing their strategies to improve care coordination and reduce the rate of growth in expenditures and have plans to refine and improve based upon their early lessons learned.

We realize that ACOs bear costs in building the organizational, financial and legal infrastructure that is necessary to participate in the Shared Savings Program and implementing the strategies previously articulated, as well as performing the tasks required of an ACO, such as: Quality reporting, conducting patient surveys, and investing in infrastructure for effective care coordination. While provider and supplier participation in the Shared Savings Program is voluntary, we have examined the potential costs of continued program participation.

In this final rule, we have revised several program policies in order to reduce the burden associated with the infrastructure, start-up and ongoing annual operating costs for participating ACOs in the Shared Savings Program. These revisions include simplifying the application and renewal process for certain ACOs with experience under either the Pioneer ACO Model or the Shared Savings Program, streamlining sharing of beneficiary data while continuing to give beneficiaries the opportunity to decline claims data sharing, and exempting changes to the public reporting template from marketing review. These significant policy modifications are discussed in detail in sections II.B., C., D, and G. of this final rule. Additionally, we continue to support streamlined processes, for example, under current program rules, eligible professionals who bill through the TIN of an ACO participant are treated as other PQRS Group Practice Reporting Option reporters and meet the PQRS requirements to avoid downward adjustments to their payments under the PFS when the ACO satisfactorily reports quality measures through the GPRO web interface. Because of this alignment with PQRS, burden is reduced for eligible professionals who are not required to report quality to CMS twice.

The Shared Savings Program is still relatively new, and the initial group of organizations that applied to participate has only recently completed the second performance year. Because of this limited experience with the program and flexibility regarding the composition of providers and suppliers within an ACO and the strategies that the provider community will pursue in order to improve quality and reduce cost of care, precise estimates of expected provider costs or changes to their costs due to this final rule are difficult to create.

In our November 2011 final rule (76 FR 67968), we discussed a Government Accountability Office analysis of the PGP demonstration. The GAO study showed that both start-up and annual operating costs varied greatly across the participating practices. Thus, as we indicated in the November 2011 final rule (76 FR 67968), we use GAO's analysis not to predict cost investment and operating expenditures, but to demonstrate that we expect the range of investment to vary greatly across ACOs and to provide the potential scope for aspiring participants.

For purposes of our current impact analysis, we are retaining the assumption included in our November 2011 final rule (76 FR 67969) of $0.58 million in average start-up investment cost but are revising our assumption for average ongoing annual operating costs for an ACO from $1.27 million to $0.86 million to reflect the lower average number of beneficiaries assigned to existing Shared Savings Program ACOs (approximately 14,700 beneficiaries) compared to the 10 PGP sites examined by GAO (average size approximately 22,400 beneficiaries). Therefore, our cost estimates for purposes of this final rule reflect an average estimate of $0.58 million for the start-up investment costs and $0.86 million in ongoing annual operating costs for an ACO participating in the Shared Savings Program. Assuming an expected range of ACOs participating in the Shared Savings Program of 50 to 300 ACOs (baseline scenario and all changes scenario, respectively) yields an estimated aggregate start-up investment cost ranging from $12 million to $58 million (assuming at least 1 in 3 ACOs will incur start-up costs), with aggregate ongoing operating costs ranging from $43 million to $258 million for the agreement period coinciding with CYs 2016 through 2018. We are also assuming that ACOs participating in a track that includes two-sided performance-based risk will in certain cases drop out of the program after receiving poor results for the first performance period beginning in 2016. Such drop out activity is assumed to affect a greater proportion of ACOs at baseline than under the policies adopted in this because of the requirement that all renewing ACOs participate in Track 2 under the baseline scenario. When utilizing the anticipated mean participation rate of ACOs in the Shared Savings Program for such agreement period coupled with the average start-up investment and ongoing annual operating costs for the up to 3 years that ACOs may participate for such agreement period, this yields estimated aggregate average start-up investment and ongoing operating costs of $129 million for 50 ACOs (assuming no regulatory changes) to $822 million for 300 ACOs (under the policies adopted in this final rule) for the agreement period covering CYs 2016 through 2018, although actual costs for individual ACOs are likely to vary and the total costs could be significantly lower or greater than the estimates previously provided.

While there will be a financial cost placed on ACOs that participate, there will be benefits to the respective organizations in the form of increased operational and healthcare delivery efficiency and potential to leverage enhanced organizational capabilities in value-based arrangements with other payers. Furthermore, as discussed previously, and explained in more detail in the preamble of this final rule, there will be an opportunity for financial reward for success in the program in the form of shared savings. As shown in Table 13, the estimate of the shared savings that will be paid to participating ACOs is a median of $1,130 million during CYs 2016 through 2018, with $960 million and $1,310 million reflecting the 10th and 90th percentiles, respectively. (Similar to the previously presented stochastic distributions, the distribution represents uncertainty given the range of expert opinion, rather than a true statistical probability distribution.)

Compared to shared savings payments, under our changes to the program and revised assumptions, we anticipate collection from participating ACOs of a relatively moderate $30 million in shared losses during the same period, with our 10th and 90th percentiles projecting $10 million and $50 million in shared losses collected, respectively. Shared losses decrease relative to the baseline (median of $50 million over the same 3 years) because, in contrast to the baseline requirement, not all renewing ACOs will be required to enter Track 2 and take on downside risk. This estimate has been revised since publication of the proposed rule based on emerging information. Modeling indicates that not all ACOs choosing downside risk in a second agreement period, whether required, as under the current regulation or as an alternative option under the changes in this final rule, will achieve shared savings and some may incur a financial loss, due to the requirement to repay a

share of actual expenditures in excess of their benchmark as shared losses. The significantly reduced level of shared losses anticipated under this final rule is largely attributable to the option for eligible ACOs to be able to renew under Track 1, and illustrates a key reason why the program would be anticipated to see significantly stronger continued participation under the changes than at baseline.

Under the changes in this final rule, total median ACO shared savings payments ($1,130 million) net of median shared losses ($30 million) to ACOs with agreement periods covering CYs 2016 through 2018 are $1,100 million in net payments. Such median total net payment amount, coupled with the aggregate average start-up investment and ongoing operating cost of $822 million, incurred by the mean participation rate of ACOs in the Shared Savings Program during the same time period, yields a net private benefit of $278 million. At baseline, absent the changes in this final rule, the median net payments to ACOs over the same time period would be only $110 million ($160 million in shared savings payments less $50 million in shared losses). Such lower net sharing at baseline, combined with baseline average start-up investment and ongoing operating costs of $129 million, yields a net private cost of $19 million. We expect that a significant portion of Track 1 ACOs that are assumed to be unwilling to renew under the program without the protection from downside risk will welcome the opportunity to continue under Track 1 for a second agreement period. Moreover, the changes reduce the estimated per-ACO average shared loss liability by 90 percent compared to the baseline, and increase the chance an ACO renewing in 2016 will continue to participate for all 3 years of the new agreement period.

We noted that our estimates of net private benefits under the baseline and the changes being adopted in this final rule are influenced by assumptions that could vary in practice and thus result in a very different actual result than what was estimated. First, for purposes of our estimates of net private benefits under the baseline, we assumed that savings realized by existing ACOs during their first agreement period are built into their benchmarks and our baseline for their successive agreement period; however, changes to the rebasing methodology in this final rule, namely equal weighting of the base years and adding a portion of savings, will significantly reduce this effect especially for ACOs that generate significant savings in their first agreement period. However, most ACOs will likely still have to achieve greater efficiencies and quality improvements during their successive agreement period compared to their prior one in order to share in savings. Moreover, the extent to which these ACOs actually exceed or fall short of our assumed baseline savings will result in higher or lower actual net private benefits relative to our estimate. Second, our estimates assumed a large proportion of existing Track 1 ACOs will continue participating under Track 1 for 2016 to 2018. All else being equal, the extent to which ACOs actually prefer to enroll in Track 3 with its higher maximum sharing rate and greater overall incentive for efficiency could increase the actual net private benefits created under the program. Finally, to the extent that actual ACO quality performance exceeds or falls short of our estimates, the net private benefits could be respectively higher or lower than what we estimated.

We also note that the net private benefits actually experienced by a given ACO may increase as a result of other benefits associated with participation in the Shared Savings Program. For example, an ACO that is participating in the Shared Savings Program and simultaneously receives value-based contracts from other payers may receive additional benefits. Such potential benefits are not considered in our analysis because they are not readily quantifiable. Therefore, we limit our benefit-cost estimate to shared savings and shared loss dollars received under the Shared Savings Program relative to estimated operational costs associated with participating in the program as previously described.

BILLING CODE 4120–01–P

TABLE 13—STOCHASTIC DISTRIBUTION FOR ESTIMATED ACO SHARED SAVINGS PAYMENTS, CYs 2016 THROUGH 2018

($ millions)

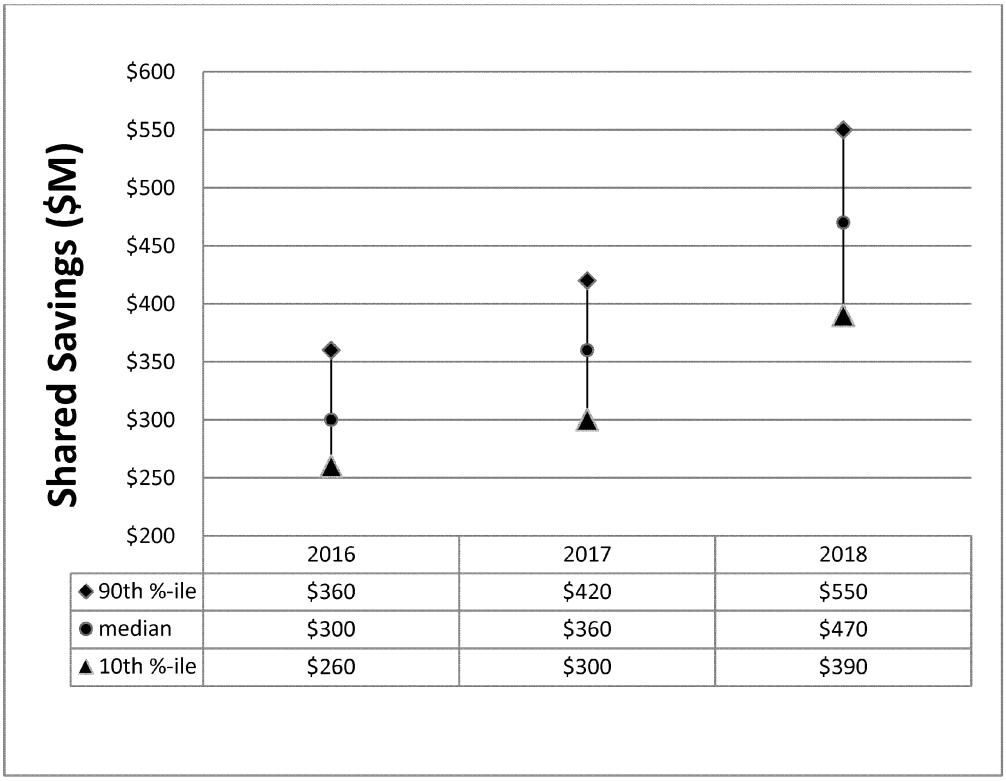

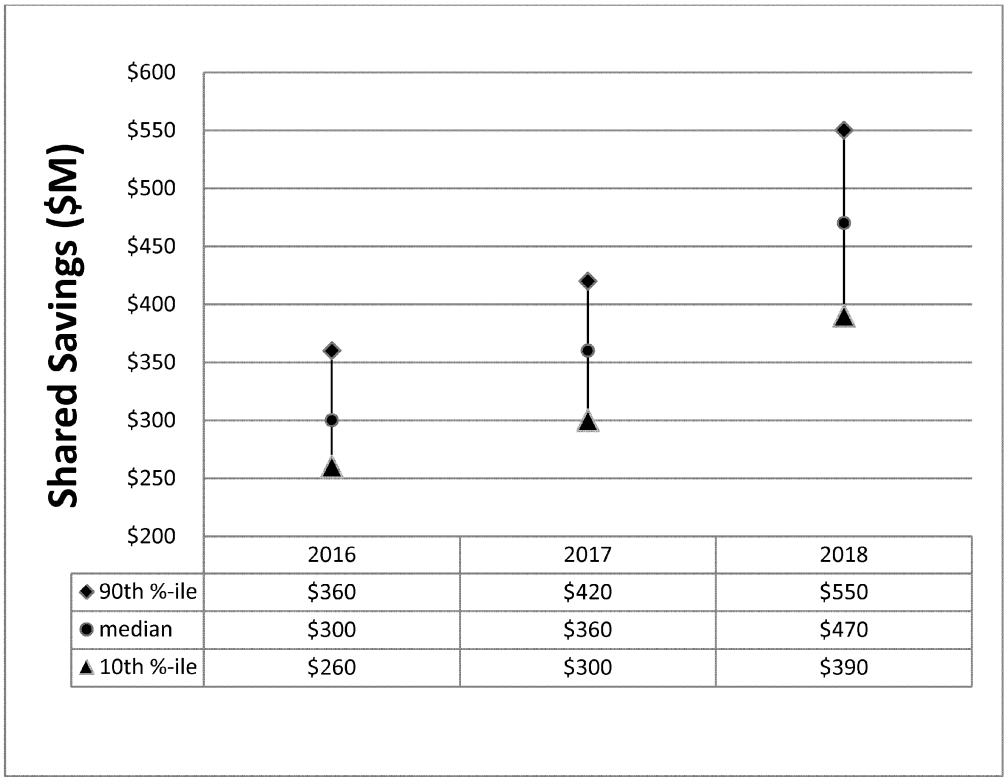

BILLING CODE 4120–01–C

Comment: A commenter opposed the decision to revise downward the assumption for average ongoing annual operating costs for an ACO participating

in the Shared Savings Program from $1.27 million to $0.86 million, stating they believe it underestimates the growing expenses that will accompany participation in the program.

Response: Our estimate reflects the average annual operating costs for the entire Shared Savings Program population of ACOs based on characteristics of ACOs that participated in 2012 and 2013. Thus, while particular ACOs may have higher (or lower) expenses as a result of their own baseline capabilities, we continue to believe that our estimate appropriately reflects the costs for the full range of ACOs participating in the program.

4. Effect on Small Entities

The RFA requires agencies to analyze options for regulatory relief of small entities, if a rule has a significant impact on a substantial number of small entities. For purposes of the RFA, small entities include small businesses, nonprofit organizations, and small governmental jurisdictions. Most physician practices, hospitals, and other providers are small entities, either by virtue of their nonprofit status or by qualifying as small businesses under the Small Business Administration's size standards (revenues of less than $7.5 to $38.5 million in any 1 year; NAIC Sector-62 series). States and individuals are not included in the definition of a small entity. For details, see the Small Business Administration's Web site at *http://www.sba.gov/content/small-business-size-standards*. For purposes of the RFA, approximately 95 percent of physicians are considered to be small entities. There are over 1 million physicians, other practitioners, and medical suppliers that receive Medicare payment under the Physician Fee Schedule (PFS).

Although the Shared Savings Program is a voluntary program and payments for individual items and services will continue to be made on a FFS basis, we acknowledge that the program can affect many small entities and have made changes to our rules and regulations accordingly in order to minimize costs and administrative burden on such entities as well as to maximize their opportunity to participate. Small entities are both allowed and encouraged to participate in the Shared Savings Program, provided they have a minimum of 5,000 assigned beneficiaries, thereby potentially realizing the economic benefits of receiving shared savings resulting from the utilization of enhanced and efficient systems of care and care coordination. Therefore, a solo, small physician practice or other small entity may realize economic benefits as a function of participating in this program and the utilization of enhanced clinical systems integration, which otherwise may not have been possible.

We have determined that this final rule will have a significant impact on a substantial number of small entities and we present more detailed analysis of these impacts, including costs and benefits to small entities and alternative policy considerations throughout this RIA. However, as detailed in this RIA, total median shared savings payments net of shared losses will offset about 134 percent of the average costs borne by entities participating in the Shared Savings Program, with an offset significantly greater than the cost of participation for the subset of ACOs that achieve shared savings in a given year, and no downside risk of significant shared losses for ACOs choosing to remain under Track 1 for a second agreement period. As a result, this regulatory impact section, together with the remainder of the preamble, constitutes our Regulatory Flexibility Analysis.

5. Effect on Small Rural Hospitals

Section 1102(b) of the Act requires us to prepare a regulatory impact analysis if a rule may have a significant impact on the operations of a substantial number of small rural hospitals. This analysis must conform to the provisions of section 604 of the RFA. For purposes of section 1102(b) of the Act, we define a small rural hospital as a hospital that is located outside of a metropolitan statistical area and has fewer than 100 beds. Although the Shared Savings Program is a voluntary program, this final rule will have a significant impact on the operations of a substantial number of small rural hospitals. We have made changes to our regulations such that rural hospitals will have stronger incentives to participate in the program through offering a smoother transition to performance risk-based models, additional opportunities to potentially share in savings under new Track 3, and streamlined administrative requirements. In addition, the ACO Investment Model being implemented by the Center for Medicare and Medicaid Innovation features pre-paid shared savings in both upfront and ongoing per beneficiary per month payments for certain new ACOs entering the program in 2016 (and also for ACOs that entered the program in 2012 through 2015), with a priority for selecting ACOs in rural areas and areas with few ACOs. As detailed in this RIA, the estimated aggregate median impact of shared savings payments to participating ACOs is approximately 134 percent of the average costs borne by entities that voluntarily participate in the Shared Savings Program, with an offset significantly greater than the cost of participation for the subset of ACOs that achieve shared savings in a given year, and no downside risk of significant shared loss penalties for ACOs choosing to remain under Track 1 for a second agreement period.

6. Unfunded Mandates

Section 202 of the Unfunded Mandates Reform Act of 1995 (UMRA) also requires that agencies assess anticipated costs and benefits before issuing any rule whose mandates require spending in any 1 year of $100 million in 1995 dollars, updated annually for inflation. In 2015, that is approximately $144 million. This final rule does not include any mandate that would result in spending by state, local or tribal governments, in the aggregate, or by the private sector in the amount of $144 million in any 1 year. Further, participation in this program is voluntary and is not mandated.

D. Alternatives Considered

In the November 2011 final rule (76 FR 67971), we noted in the regulatory impact analysis that many tenets of the program are statutorily mandated and thus allow for little, if any, flexibility in the rulemaking process. However, in some areas, the statute does provide flexibility, and we made our policy decisions regarding alternatives by balancing the effects of alternatives on a range of program stakeholders, including both providers and beneficiaries, the effects on the Medicare Trust Funds, and operational constraints. This final rule contains a range of modifications to program policies that take this balance into consideration. The preceding preamble provides descriptions of the various statutory provisions that are addressed in this final rule, identifies those policies where discretion is allowed and has been exercised, presents the rationales for our final policies and, where relevant, alternatives that were considered.

In addition to estimating the difference between impacts at baseline and under the policies adopted in this final rule, the stochastic model was also adapted to isolate marginal impacts for several alternative scenarios related to additional options for which the proposed rule sought comment. In one scenario, we researched the relationship between existing ACO base year per capita costs and our calculation of the corresponding county weighted average

FFS risk-adjusted per capita cost regional benchmarks. We observed significant variation in the relationship between individual ACO costs exhibited at baseline relative to their simulated regional benchmarks, with the standard error of percentage difference in costs approaching as high as 10 percent for samples of existing smaller-sized Shared Savings Program ACOs. Such variation not only would reduce the accuracy of savings measurements under a model using regional instead of ACO-historical benchmarks, it would also likely allow a significant number of ACOs to benefit from arbitrage in selecting the higher sharing in Track 3 with foreknowledge that large savings would likely be measured regardless of any real effort to increase efficiency. Certain other ACOs would be likely to drop out of the program rather than face a large gap between their actual baseline costs and their much lower regional benchmark. We estimated that such selective participation could reduce the gross savings generated, given fewer ACOs remaining in the model, yet increase overall payments due to remaining ACOs receiving higher benchmarks and selectively participating in Track 3 at artificially-low level of risk for generating shared losses. The net federal impact of the program under this scenario was estimated to reach as high as a $1 billion dollar cost over the 2016 through 2018 agreement period.

However, we did note that information regarding regional benchmarks could potentially be utilized to adjust ACO benchmark calculations. For example, adding a portion of savings from the first agreement period into the second agreement period baseline (as finalized in this rule) could be targeted such that the resulting boost to an ACO's benchmark would not result in an adjusted benchmark greater than the ACO's regional benchmark. Such alternative policy could potentially be considered as part of future rulemaking to provide targeted benchmark rebasing relief to ACOs that demonstrate efficiency improvement in the form of savings in the first agreement period as well as efficiency attainment in the form of lower absolute cost than their region.

Another potential use of information regarding regional spending could involve utilization of the change in regional spending over time specific to each ACO to adjust an ACO's historical benchmark as part of rebasing. Therefore, we also considered the option discussed in the proposed rule for calculating a scaling factor that would adjust for the difference in the ACO's cost from benchmark year 3 (of the ACO's first agreement period) to its regional benchmark for that same year. Under this option, the scaling factor would then be applied to the ACO's regional benchmark calculated for benchmark year 3 of the second agreement period. By adjusting for the relationship between the ACO and its region during the third benchmark year of the first agreement period, such methodology would be roughly equivalent to inflating the ACO's historical benchmark from the first agreement period to base year 3 of the second agreement period by applying the trend observed for the ACO's regional benchmark over that same time period. Modeling on historical data including regional trends at both county and Hospital Referral Region (HRR) levels indicated that the resulting trended and updated benchmarks would exhibit increased variation that would tend to boost second agreement period benchmarks for ACOs showing significant savings in the first agreement period to a significantly greater extent than will occur as a result of adding a portion of first agreement period savings to the new baseline (as stipulated in this rule), thereby increasing the cost of shared savings payments to these ACOs that will already have benefited to a lesser extent from the new rebasing policies included in this rule. Conversely, this alternative would also tend to significantly lower benchmarks for ACOs showing significant losses in the first agreement period. We estimated such policy would only modestly decrease shared savings payments to ACOs that would have already faced lower benchmarks under the equal weighting of the base years as otherwise stipulated in this rule, and that such modest savings from reduced shared savings payments would only fractionally offset significant increases in shared savings payments to favored ACOs. In other words, such ACOs would already be at a reduced likelihood for earning future shared savings; therefore, further lowering their benchmarks would produce diminishing effect on the reduction of shared savings payments. The estimated net result would be lower net program savings ($540 million over 3 years) than we estimated under the changes in this final rule ($780 million). We also estimated that such alternative benchmark—if weighted by 70 percent and blended with a 30 percent weight for the benchmark calculated as stipulated in this final rule (except assuming no portion of savings would be added back into the second agreement period base years)—would mainly scale back the increase in benchmarks for favored ACOs enough to produce roughly the same net savings as this final rule methodology was estimated to produce ($780 million over 2016 to 2018). We note that such estimates of the impact of regional trend on benchmark rebasing assume that ACO assigned beneficiary populations would not be excluded from the calculation of each individual ACO's regional benchmark trend, and that risk adjustment would be accomplished without bias from changes in the completeness and intensity of diagnosis coding for ACO beneficiaries. On the other hand, we also assumed that placing a lower weight on ACO's historical costs in setting future benchmarks, which makes achieving savings more financially attractive, would not increase the amount of gross savings that ACOs elect to achieve. A higher or lower weighting on the alternative benchmark could be required to produce a similar net impact as this final rule if these assumptions were changed.

The existing Shared Savings Program benchmarking methodology's reliance on rebasing has received attention in a number of recent analyses by academic researchers.[2] In theory, options that partially or fully de-link ACOs future benchmarks from current spending decisions increase the incentive to provide efficient care and, therefore, are likely to lead ACOs to achieve greater gross savings. While we believe the policies in this final rule provide a meaningful incentive for all ACOs to continue to participate and generate efficiency in care delivery in a second agreement period (for ACOs generating savings in the first agreement period there will be an explicit meaningful increase in their second agreement benchmark relative to their actual experience, and for ACOs showing losses, rebasing will provide a benchmark more in line with their emerging costs at the end of their first agreement period), we also believe that a long-term policy potentially featuring a blend of regional benchmark trend alongside rebasing could optimize the incentive for ACOs to invest in sustainable efficiency improvements in care delivery. The long-term effects of switching to a benchmarking methodology based on the blended

[2] Douven, Rudy; Thomas G. McGuire; and J. Michael McWilliams. (2015). ''Avoiding Unintended Incentives in ACO Payment Models.'' *Health Affairs (34)(1),* 143–149; McWilliams, Michael J., Michael E. Chernew, Bruce E. Landon, and Aaron L. Schwartz. (2015) ''Performance Differences in Year 1 of Pioneer Accountable Care Organizations.'' New England Journal of Medicine.

approach described previously will differ from the short-term effects in a number of ways.

For example, while as noted earlier the methodology being adopted in this final rule likely produces higher average benchmarks for the first agreement period following rebasing, the average level of benchmarks under this blended methodology would likely eventually rise relative to the average level of benchmarks under the methodology being adopted in this final rule since the savings ACOs achieve would no longer be fully reflected in ACOs' benchmarks in the long run (by contrast under the methodology being adopted in this final rule only a portion of savings is added to the baseline). Higher benchmarks would encourage greater participation in the program, increasing overall efficiency gains in FFS costs of care, although these gains would be at least partially offset by increased shared savings payments to ACOs that would have participated in the program even without a higher benchmark. Additionally, the program will likely begin to experience increased selective participation.

ACOs perceiving that losses measured in the first agreement period would be likely to continue to be reflected in future benchmarks to such an extent that they would not anticipate a legitimate opportunity to share in real savings they might generate in future years would be likely to drop out of the program. The decline in participation from such ACOs would grow over multiple agreement periods as the number of years grows between when the initial regional benchmark and scaling factor adjustment are calculated and the third base year of a future potential agreement period, leading to decreased program participation and lower overall efficiency gains in FFS cost of care even as shared savings payments to ACOs benefiting from favorable variation in regional trend relative to actual ACO baseline cost would likely grow.

The cause of growing variation in cost over multiple years is related to many complex factors. One important factor is that the mix of patients assigned to an ACO will change over time, for example as other ACOs form and compete for patient assignment to a greater extent in future performance years than in the ACO's original baseline period. Variation is also created by changes in the providers that actually bill services under a given ACO participant TIN, or as the ACO makes wholesale changes to the list of ACO participant TINs associated with it. To illustrate this last factor, we note that nearly three-quarters of ACOs participating as of 2014 changed their list of ACO participant TINs for 2015, resulting in baseline assigned population per capita cost changes exceeding ± 20 percent for certain ACOs. As large numbers of ACOs have modified their ACO participants lists each year, and because assignment even to an ACO with a static ACO participant TIN makeup will often exhibit significant changes in the baseline cost of beneficiaries assigned over successive years (notwithstanding the effects of risk adjustment), the most recent historical data for an ACO remains the most accurate predictor of the ACO's expected future costs. We note that these differences in beneficiary assignment would be mitigated, but not eliminated by the approaches to adjusting for changes in patient mix and ACO participant TIN composition described in the preamble. Another important factor is that regions are not entirely homogenous, and the underlying trends in market conditions may differ among ACOs located in different portions of a given region. Therefore developing future benchmarks from a fixed ACO baseline increases the error in measuring real savings or losses and leads to increasing net federal costs resulting from selective participation, with such costs likely to grow as the gap widens between the static baseline and the future agreement period within which a benchmark is calculated.

The importance of the improved incentives under the blended methodology may grow over time and work to offset the effects of increased selective participation, for at least two reasons. As ACOs gain experience with the payment model, they are likely to increasingly recognize the aspects in which the current benchmarking methodology penalizes the decision to achieve efficiencies and reduce efforts to achieve those efficiencies accordingly. In addition, we expect that the degree of gross savings that is feasible for ACOs to achieve will grow over time as ACOs gain experience with the payment model, making the extent to which the benchmarking methodology encourages ACOs to achieve savings increasingly important over time.

E. Accounting Statement and Table

As required by OMB Circular A–4 under Executive Order 12866, in Table 14, we have prepared an accounting statement showing the change in (A) net federal monetary transfers, (B) shared savings payments to ACOs net of shared loss payments from ACOs and (C) the aggregate cost of ACO operations for ACO participants and ACO providers/suppliers from 2016 to 2018 that are associated with the provisions of this final rule as compared to baseline.

TABLE 14—ACCOUNTING STATEMENT ESTIMATED IMPACTS

[CYs 2016–2018]

Category	Primary estimate (million)	Minimum estimate (million)	Maximum estimate (million)	Source citation (RIA, preamble, etc.)
Benefits				
Annualized monetized: Discount rate: 7%	−$63.6	$35.6	−$168.1	Change from baseline (Table 9) to finalized changes (Table 10).
Annualized monetized: Discount rate: 3%	−70.9	37.2	−184.7	
Notes:	Negative values reflect reduction in federal net cost resulting from care management by ACOs. Estimates may be a combination of benefits and transfers. To the extent that the incentives created by Medicare payments change the amount of resources society uses in providing medical care, the more accurate categorization of effects would be as costs (positive values) or benefits/cost savings (negative values), rather than as transfers.			

TABLE 14—ACCOUNTING STATEMENT ESTIMATED IMPACTS—Continued

[CYs 2016–2018]

Category	Primary estimate (million)	Minimum estimate (million)	Maximum estimate (million)	Source citation (RIA, preamble, etc.)
Benefits				
Annualized monetized: Discount rate: 7%	271.2	236.1	301.4	Change from baseline (Table 9) to finalized changes (Table 10).
Annualized monetized: Discount rate: 3%	293.9	255.7	326.4	
Notes:	Positive values reflect increase in aggregate shared savings net of shared losses. Estimates may be a combination of benefits and transfers. To the extent that the incentives created by Medicare payments change the amount of resources society uses in providing medical care, the more accurate categorization of effects would be as benefits/cost savings, rather than as transfers.			
Operational Cost				
Annualized monetized: Discount rate: 7%	191.0			Change from baseline (Table 9) to finalized changes (Table 10).
Annualized monetized: Discount rate: 3%	205.5			
Notes:	Positive values reflect increase in aggregate ACO operating costs largely attributable to assumed increased participation as a result of the policies included in this final rule compared to baseline.			

F. Conclusion

The analysis in this section, together with the remainder of this preamble, provides a Regulatory Impact Analysis. As a result of this final rule, the median estimate of the financial impact of the Shared Savings Program for CYs 2016 through 2018 would be net federal savings (after shared savings payments) of $780 million. Under this final rule, median savings would be about $240 million higher than we estimated assuming no changes for this period. Although this is the ''best estimate'' of the financial impact of the Shared Savings Program during CYs 2016 through 2018, a relatively wide range of possible outcomes exists. While over 97 percent of the stochastic trials resulted in net program savings, the 10th and 90th percentiles of the estimated distribution show net savings of $230 million to net savings of $1,430 million, respectively. In the extreme maximum and minimum scenarios, the results were as large as $2.7 billion in savings or $500 million in costs.

In addition, at the anticipated mean participation rate of ACOs in the Shared Savings Program, participating ACOs may experience an estimated aggregate average start-up investment and ongoing operating cost of $822 million for CYs 2016 through 2018. Lastly, we estimate an aggregate median impact of $1,130 million in shared savings payments to participating ACOs in the Shared Savings Program for CYs 2016 through 2018. The 10th and 90th percentiles of the estimate distribution, for the same time period, yield shared savings payments to ACOs of $960 million and $1,310 million, respectively. Therefore, the total median ACO shared savings payments of $1,130 million during CYs 2016 through 2018, net of a median $30 million shared losses, coupled with the aggregate average start-up investment and ongoing operating cost of $822 million yields a net private benefit of $278 million.

Overall, we assumed greater participation by ACOs under the policies contained in this final rule due to our changes to ease the transition from Track 1 to Track 2, increase rebased benchmarks to account for a portion of savings in the prior agreement period, and adopt an alternative performance risk-based model—Track 3 with greater flexibility. These changes resulted in total shared savings increasing significantly, while shared losses decreased. Moreover, as participation in the Shared Savings Program continues to expand, we anticipate there will be a broader focus on care coordination and quality improvement among providers and suppliers within the Medicare program that will lead to both increased efficiency in the provision of care and improved quality of the care that is provided to beneficiaries.

In accordance with the provisions of Executive Order 12866, this rule was reviewed by the Office of Management and Budget.

List of Subjects in 42 CFR Part 425

Administrative practice and procedure, Health facilities, Health professions, Medicare, Reporting and recordkeeping requirements.

For the reasons set forth in the preamble of this final rule, the Centers for Medicare & Medicaid Services amends 42 CFR part 425 to read as follows:

PART 425—MEDICARE SHARED SAVINGS PROGRAM

■ 1. The authority citation for part 425 continues to read as follows:

Authority: Secs. 1102, 1106, 1871, and 1899 of the Social Security Act (42 U.S.C. 1302 and 1395hh).

§ 425.10 [Amended]

■ 2. Amend § 425.10 as follows:

■ A. In paragraph (a) by removing the phrase ''under FFS Medicare'' and adding in its place the phrase ''under FFS Medicare, except as permitted under section 1899(f) of the Act''.

■ B. In paragraph (b)(6) by removing the phrase ''two-sided model'' and adding in its place the phrase ''two-sided models''.

■ 3. Amend § 425.20 by:

■ A. Revising the definition of ''ACO participant''.

■ B. Adding the definition of ''ACO participant agreement'' in alphabetical order.

■ C. Revising the definitions of ''ACO professional'', ''ACO provider/supplier'', ''Agreement period'', and ''Assignment''.

■ D. Adding the definition of ''Assignment window'' in alphabetical order.
■ E. Revising the definitions of ''Continuously assigned beneficiary'', ''Hospital'', and ''Newly assigned beneficiary''.
■ F. Adding the definition of ''Participation agreement'' in alphabetical order.
■ G. In the definition of ''Performance year'' by removing the phrase ''in the ACO's agreement'' and adding in its place the phrase ''in the participation agreement''.
■ H. Revising the definitions of ''Primary care physician'' and ''Primary care services''.

The revisions and additions read as follows:

§ 425.20 Definitions.

* * * * *

ACO participant means an entity identified by a Medicare-enrolled billing TIN through which one or more ACO providers/suppliers bill Medicare, that alone or together with one or more other ACO participants compose an ACO, and that is included on the list of ACO participants that is required under § 425.118.

ACO participant agreement means the written agreement (as required at § 425.116) between the ACO and ACO participant in which the ACO participant agrees to participate in, and comply with, the requirements of the Shared Savings Program.

ACO professional means an individual who is Medicare-enrolled and bills for items and services furnished to Medicare fee-for-service beneficiaries under a Medicare billing number assigned to the TIN of an ACO participant in accordance with applicable Medicare regulations and who is either of the following:

(1) A physician legally authorized to practice medicine and surgery by the State in which he or she performs such function or action.

(2) A practitioner who is one of the following:

(i) A physician assistant (as defined at § 410.74(a)(2) of this chapter).

(ii) A nurse practitioner (as defined at § 410.75(b) of this chapter).

(iii) A clinical nurse specialist (as defined at § 410.76(b) of this chapter).

ACO provider/supplier means an individual or entity that meets all of the following:

(1) Is a—

(i) Provider (as defined at § 400.202 of this chapter); or

(ii) Supplier (as defined at § 400.202 of this chapter).

(2) Is enrolled in Medicare.

(3) Bills for items and services furnished to Medicare fee-for-service beneficiaries during the agreement period under a Medicare billing number assigned to the TIN of an ACO participant in accordance with applicable Medicare regulations.

(4) Is included on the list of ACO providers/suppliers that is required under § 425.118.

Agreement period means the term of the participation agreement, which is 3 performance years unless otherwise specified in the participation agreement.

* * * * *

Assignment means the operational process by which CMS determines whether a beneficiary has chosen to receive a sufficient level of the requisite primary care services from ACO professionals so that the ACO may be appropriately designated as exercising basic responsibility for that beneficiary's care during a given benchmark or performance year.

Assignment window means the 12-month period used to assign beneficiaries to an ACO.

* * * * *

Continuously assigned beneficiary means a beneficiary assigned to the ACO in the current performance year who was either assigned to or received a primary care service from any of the ACO participants during the assignment window for the most recent prior benchmark or performance year.

* * * * *

Hospital means a hospital as defined in section 1886(d)(1)(B) of the Act.

* * * * *

Newly assigned beneficiary means a beneficiary that is assigned to the ACO in the current performance year who was neither assigned to nor received a primary care service from any of the ACO participants during the assignment window for the most recent prior benchmark or performance year.

* * * * *

Participation agreement means the written agreement required under § 425.208(a) between the ACO and CMS that, along with the regulations in this part, govern the ACO's participation in the Shared Savings Program.

* * * * *

Primary care physician means a physician included in an attestation by the ACO as provided under § 425.404 for services furnished in an FQHC or RHC, or a physician who has a primary care specialty designation of—

(1) For performance years 2012 through 2015, internal medicine, general practice, family practice, or geriatric medicine; and

(2) For performance year 2016 and subsequent years, internal medicine, general practice, family practice, geriatric medicine, or pediatric medicine.

Primary care services means the set of services identified by the following HCPCS codes:

(1) For performance years 2012 through 2015 as follows:

(i) 99201 through 99215.

(ii)(A) 99304 through 99340 and 99341 through 99350.

(B) G0402 (the code for the Welcome to Medicare visit).

(C) G0438 and G0439 (codes for the annual wellness visits).

(iii) Revenue center codes 0521, 0522, 0524, and 0525 submitted by FQHCs (for services furnished prior to January 1, 2011), or by RHCs.

(2) For performance years 2016 and subsequent years as follows:

(i) 99201 through 99215.

(ii)(A) 99304 through 99340 and 99341 through 99350.

(B) G0402 (the code for the Welcome to Medicare visit).

(C) G0438 and G0439 (codes for the annual wellness visits).

(iii) Revenue center codes 0521, 0522, 0524, and 0525 submitted by FQHCs (for services furnished prior to January 1, 2011), or by RHCs.

(iv) 99495, 99496, and 99490.

(3) Additional codes designated by CMS as primary care services for purposes of the Shared Savings Program, including new HCPCS/CPT and revenue center codes and any subsequently modified or replacement codes for the HCPCS/CPT and revenue center codes identified in paragraphs (1) through (2) of this definition.

* * * * *

§ 425.100 [Amended]

■ 4. Amend § 425.100 as follows:
■ A. In paragraph (b) by removing the reference ''under § 425.604 or § 425.606'' and adding in its place the reference ''under § 425.604, § 425.606 or § 425.610''.
■ B. In paragraph (c) by removing the phrase ''under the two-sided model'' and adding in its place the phrase ''under a two-sided model''.
■ C. In paragraph (c) by removing the reference ''under § 425.606'' and adding in its place the reference ''under § 425.606 or § 425.610''.

■ 5. Amend § 425.104 as follows:
■ A. In paragraph (b), by removing the phrase ''otherwise independent ACO participants must'' and adding in its place the phrase ''ACO participants, each of which is identified by a unique TIN, must''.

■ B. By adding paragraph (c).

The addition reads as follows:

§ 425.104 Legal entity.

* * * * *

(c) An ACO formed by a single ACO participant may use its existing legal entity and governing body, provided it satisfies the other requirements in §§ 425.104 and 425.106.

■ 6. Amend § 425.106 as follows:

■ A. By revising paragraphs (a), (b)(3), (c)(1), and (c)(2).

■ B. By removing paragraphs (b)(4) and (b)(5).

The revisions read as follows:

§ 425.106 Shared governance.

(a) *General rule.* (1) An ACO must maintain an identifiable governing body with ultimate authority to execute the functions of an ACO as defined under this part, including but not limited to, the processes defined under § 425.112 to promote evidence-based medicine and patient engagement, to report on quality and cost measures, and to coordinate care.

(2) The governing body of the ACO must satisfy all of the following criteria:

(i) Be the same as the governing body of the legal entity that is the ACO.

(ii) Be separate and unique to the ACO and must not be the same as the governing body of any ACO participant, except as provided in § 425.104(c).

(iii) Satisfy all other requirements of this section.

(b) * * *

(3) The governing body members must have a fiduciary duty to the ACO, including the duty of loyalty, and must act consistent with that fiduciary duty.

(c) * * *

(1) The ACO must—

(i) Establish a mechanism for shared governance among the ACO participants or combinations of ACO participants (as identified in § 425.102(a)) that formed the ACO; and

(ii) Provide for meaningful participation in the composition and control of the ACO's governing body for ACO participants or their designated representatives.

(2) The ACO governing body must include a Medicare beneficiary who—

(i) Is served by the ACO;

(ii) Is not an ACO provider/supplier;

(iii) Does not have a conflict of interest with the ACO; and

(iv) Does not have an immediate family member who has a conflict of interest with the ACO.

* * * * *

■ 7. Amend § 425.108 by revising paragraph (c) and removing paragraph (e) to read as follows:

§ 425.108 Leadership and management.

* * * * *

(c) Clinical management and oversight must be managed by a senior-level medical director. The medical director must be all of the following:

(1) A board-certified physician.

(2) Licensed in a State in which the ACO operates.

(3) Physically present on a regular basis at any clinic, office or other location of the ACO, an ACO participant, or an ACO provider/supplier.

* * * * *

■ 8. Amend § 425.110 by revising paragraphs (a)(2) and (b) to read as follows:

§ 425.110 Number of ACO professionals and beneficiaries.

(a) * * *

(2) CMS deems an ACO to have initially satisfied the requirement to have at least 5,000 assigned beneficiaries as specified in paragraph (a)(1) of this section if 5,000 or more beneficiaries are historically assigned to the ACO participants in each of the 3 benchmark years, as calculated using the assignment methodology set forth in subpart E of this part. In the case of the third benchmark year, CMS uses the most recent data available to estimate the number of assigned beneficiaries.

(b) If at any time during the performance year, an ACO's assigned population falls below 5,000, the ACO may be subject to the actions described in §§ 425.216 and 425.218.

(1) While under a CAP, the ACO remains eligible for shared savings and losses and the MSR and MLR (if applicable) is set at a level consistent with the number of assigned beneficiaries.

(2) If the ACO's assigned population is not at least 5,000 by the end of the performance year specified by CMS in its request for a CAP, CMS terminates the participation agreement and the ACO is not eligible to share in savings for that performance year.

■ 9. Amend § 425.112 by adding paragraphs (b)(4)(ii)(C) and (D) to read as follows:

§ 425.112 Required processes and patient-centeredness criteria.

* * * * *

(b) * * *

(4) * * *

(ii) * * *

(C) Describe how the ACO will encourage and promote use of enabling technologies for improving care coordination for beneficiaries. Enabling technologies may include one or more of the following:

(*1*) Electronic health records and other health IT tools.

(*2*) Telehealth services, including remote patient monitoring.

(*3*) Electronic exchange of health information.

(*4*) Other electronic tools to engage beneficiaries in their care.

(D) Describe how the ACO intends to partner with long-term and post-acute care providers, both inside and outside the ACO, to improve care coordination for their assigned beneficiaries.

■ 10. Add § 425.116 to subpart B to read as follows:

§ 425.116 Agreements with ACO participants and ACO providers/suppliers

(a) *ACO participant agreements.* For performance year 2017 and subsequent performance years, the ACO must have an ACO participant agreement with each ACO participant that complies with the following criteria:

(1) The only parties to the agreement are the ACO and the ACO participant.

(2) The agreement must be signed on behalf of the ACO and the ACO participant by individuals who are authorized to bind the ACO and the ACO participant, respectively.

(3) The agreement must expressly require the ACO participant to agree, and to ensure that each ACO provider/supplier billing through the TIN of the ACO participant agrees, to participate in the Shared Savings Program and to comply with the requirements of the Shared Savings Program and all other applicable laws and regulations (including, but not limited to, those specified at § 425.208(b)).

(4) The agreement must set forth the ACO participant's rights and obligations in, and representation by, the ACO, including without limitation, the quality reporting requirements set forth in subpart F of this part, the beneficiary notification requirements set forth at § 425.312, and how participation in the Shared Savings Program affects the ability of the ACO participant and its ACO providers/suppliers to participate in other Medicare demonstration projects or programs that involve shared savings.

(5) The agreement must describe how the opportunity to receive shared savings or other financial arrangements will encourage the ACO participant to adhere to the quality assurance and improvement program and evidence-based medicine guidelines established by the ACO.

(6) The agreement must require the ACO participant to update its enrollment information, including the addition and deletion of ACO professionals and ACO providers/

suppliers billing through the TIN of the ACO participant, on a timely basis in accordance with Medicare program requirements and to notify the ACO of any such changes within 30 days after the change.

(7) The agreement must permit the ACO to take remedial action against the ACO participant, and must require the ACO participant to take remedial action against its ACO providers/suppliers, including imposition of a corrective action plan, denial of incentive payments, and termination of the ACO participant agreement, to address noncompliance with the requirements of the Shared Savings Program and other program integrity issues, including those identified by CMS.

(8) The agreement must be for a term of at least 1 performance year and must articulate potential consequences for early termination from the ACO.

(9) The agreement must require completion of a close-out process upon termination or expiration of the agreement that requires the ACO participant to furnish all data necessary to complete the annual assessment of the ACO's quality of care and addresses other relevant matters.

(b) *Agreements with ACO providers/suppliers.* ACOs have the option of contracting directly with its ACO providers/suppliers regarding items and services furnished to beneficiaries aligned to the ACO. For performance year 2017 and subsequent performance years, an ACO's agreement with an ACO provider/supplier regarding such items and services must satisfy the following criteria:

(1) The only parties to the agreement are the ACO and the ACO provider/supplier.

(2) The agreement must be signed by the ACO provider/supplier and by an individual who is authorized to bind the ACO.

(3) The agreement must expressly require the ACO provider/supplier to agree to participate in the Shared Savings Program and to comply with the requirements of the Shared Savings Program and all other applicable laws and regulations (including, but not limited to, those specified at § 425.208(b)).

(4) The agreement must set forth the ACO provider's/supplier's rights and obligations in, and representation by, the ACO, including without limitation, the quality reporting requirements set forth in subpart F of this part, the beneficiary notification requirements set forth at § 425.312, and how participation in the Shared Savings Program affects the ability of the ACO provider/supplier to participate in other Medicare demonstration projects or programs that involve shared savings.

(5) The agreement must describe how the opportunity to receive shared savings or other financial arrangements will encourage the ACO provider/supplier to adhere to the quality assurance and improvement program and evidence-based medicine guidelines established by the ACO.

(6) The agreement must require the ACO provider/supplier to—

(i) Update its enrollment information on a timely basis in accordance with Medicare program requirements; and

(ii) Notify the ACO of any such changes within 30 days after the change.

(7) The agreement must permit the ACO to take remedial action including the following against the ACO provider/supplier to address noncompliance with the requirements of the Shared Savings Program and other program integrity issues, including those identified by CMS:

(i) Imposition of a corrective action plan.

(ii) Denial of incentive payments.

(iii) Termination of the ACO participant agreement.

(c) *Submission of agreements.* The ACO must submit an executed ACO participant agreement for each ACO participant at the time of its initial application, participation agreement renewal process, and when adding to its list of ACO participants in accordance with § 425.118. The agreements may be submitted in the form and manner set forth in § 425.204(c)(6) or as otherwise specified by CMS.

■ 11. Add § 425.118 to subpart B to read as follows:

§ 425.118 Required reporting of ACO participants and ACO providers/suppliers.

(a) *List requirements.* (1) The ACO must maintain, update, and submit to CMS an accurate and complete list identifying each ACO participant (including its Medicare-enrolled TIN) and each ACO provider/supplier (including its NPI or other identifier) in accordance with this section.

(2) Before the start of an agreement period, before each performance year thereafter, and at such other times as specified by CMS, the ACO must submit to CMS an ACO participant list and an ACO provider/supplier list. The ACO may request consideration of claims billed under merged and acquired Medicare-enrolled TINs in accordance with the process set forth at § 425.204(g).

(3) The ACO must certify the submitted lists in accordance with § 425.302(a)(2).

(4) All Medicare enrolled individuals and entities that have reassigned their right to receive Medicare payment to the TIN of the ACO participant must be included on the ACO provider/supplier list and must agree to participate in the ACO and comply with the requirements of the Shared Savings Program before the ACO submits the ACO participant list and the ACO provider/supplier list.

(b) *Changes to the ACO participant list*—(1) *Additions.* (i) An ACO must submit to CMS a request to add an entity and its Medicare enrolled TIN to its ACO participant list. This request must be submitted at such time and in the form and manner specified by CMS.

(ii) If CMS approves the request, the entity and its Medicare enrolled TIN is added to the ACO participant list effective January 1 of the following performance year.

(iii) CMS may deny the request on the basis that the entity is not eligible to be an ACO participant or on the basis of the results of the screening performed under § 425.304(b).

(2) *Deletions.* (i) An ACO must notify CMS no later than 30 days after the termination of an ACO participant agreement. Such notice must be submitted in the form and manner specified by CMS and must include the termination date of the ACO participant agreement.

(ii) The entity is deleted from the ACO participant list as of the termination date of the ACO participant agreement.

(3) *Adjustments.* (i) CMS annually adjusts an ACO's assignment, historical benchmark, the quality reporting sample, and the obligation of the ACO to report on behalf of eligible professionals that bill under the TIN of an ACO participant for certain CMS quality initiatives to reflect the addition or deletion of entities from the list of ACO participants that is submitted to CMS before the start of a performance year in accordance with paragraph (a) of this section.

(ii) Absent unusual circumstances, CMS does not make adjustments during the performance year to the ACO's assignment, historical benchmark, performance year financial calculations, the quality reporting sample, or the obligation of the ACO to report on behalf of eligible professionals that bill under the TIN of an ACO participant for certain CMS quality initiatives to reflect the addition or deletion of entities from the ACO participant list that become effective during the performance year. CMS has sole discretion to determine whether unusual circumstances exist that would warrant such adjustments.

(c) *Changes to the ACO provider/supplier list*—(1) *Additions.* (i) An ACO must notify CMS within 30 days after an individual or entity becomes a Medicare-enrolled provider or supplier that bills for items and services it furnishes to Medicare fee-for-service beneficiaries under a billing number assigned to the TIN of an ACO participant. The notice must be submitted in the form and manner specified by CMS.

(ii) If the ACO timely submits notice to CMS, the addition of an individual or entity to the ACO provider/supplier list is effective on the date specified in the notice furnished to CMS, but no earlier than 30 days before the date of the notice. If the ACO fails to submit timely notice to CMS, the addition of an individual or entity to the ACO provider/supplier list is effective on the date of the notice.

(2) *Deletions.* (i) An ACO must notify CMS no later than 30 days after an individual or entity ceases to be a Medicare-enrolled provider or supplier that bills for items and services it furnishes to Medicare fee-for-service beneficiaries under a billing number assigned to the TIN of an ACO participant. The notice must be submitted in the form and manner specified by CMS.

(ii) The deletion of an ACO provider/supplier from the ACO provider/supplier list is effective on the date the individual or entity ceased to be a Medicare-enrolled provider or supplier that bills for items and services it furnishes to Medicare fee-for-service beneficiaries under a billing number assigned to the TIN of an ACO participant.

(d) *Update of Medicare enrollment information.* The ACO must ensure that all changes to enrollment information for ACO participants and ACO providers/suppliers, including changes to reassignment of the right to receive Medicare payment, are reported to CMS consistent with § 424.516. r

■ 12. Amend § 425.200 as follows:

■ A. By revising the section heading.

■ B. In paragraph (a), by removing the term ''three'' and adding in its place the figure ''3''.

■ C. In paragraphs (b) introductory text (paragraph heading), (b)(1) introductory text, (b)(1)(i), (b)(1)(ii), (b)(2)(ii), and (c)(1) by removing the term ''agreement'' each time it appears and adding in its place the term ''participation agreement''.

The revision reads as follows:

§ 425.200 Participation agreement with CMS.

* * * * *

■ 13. Amend § 425.202 by revising paragraphs (b) and (c) to read as follows:

§ 425.202 Application procedures.

* * * * *

(b) *Condensed application form.* (1) PGP demonstration sites applying to participate in the Shared Savings Program will have an opportunity to complete a condensed application form.

(2) A Pioneer ACO may use a condensed application form to apply for participation in the Shared Savings Program if it satisfies all of the following criteria:

(i) The applicant is the same legal entity as the Pioneer ACO.

(ii) The applicant's ACO participant list does not contain any ACO participant TINs that did not appear on the ''Confirmed Annual TIN/NPI List'' (as defined in the Pioneer ACO Model Innovation Agreement with CMS) for the applicant ACO's last full performance year in the Pioneer ACO Model.

(iii) The applicant is not applying to participate in the one-sided model.

(c) *Application review.* CMS reviews applications in accordance with § 425.206.

■ 14. Amend § 425.204 by:

■ A. In paragraph (b)(2) by removing the terms ''ACO agreement'' and adding in its place the terms ''participation agreement''.

■ B. In paragraph (b)(3) by removing the term ''agreement'' and adding in its place the terms ''participation agreement''.

■ C. Revising paragraphs (c)(1) introductory text and (c)(1)(i), (iii), and (iv).

■ D. In paragraph (c)(1)(vi) by removing the terms ''ACO's agreement'' and adding in its place the terms ''participation agreement''.

■ E. Revising paragraph (c)(3).

■ F. In paragraph (c)(4)(ii), by removing the phrase '' among multiple, independent ACO participants'' and adding in its place the phrase ''among two or more ACO participants''.

■ G. Revising paragraph (c)(5)(i).

■ H. Adding paragraph (c)(6).

■ I. In paragraph (e)(1), removing the phrase ''an ACO must specify whether it is applying to participate in Track 1 or Track 2'' and adding in its place the phrase ''an ACO must specify the Track for which it is applying''

■ J. Revising paragraph (f).

■ K. Adding paragraph (g).

The revisions and additions read as follows:

§ 425.204 Content of the application.

* * * * *

(c) * * *

(1) As part of its application, and upon request thereafter, an ACO must submit to CMS the following supporting materials to demonstrate that the ACO satisfies the requirements set forth in this part:

(i) Documents (for example, ACO participant agreements, agreements with ACO providers/suppliers, employment contracts, and operating policies) sufficient to describe the ACO participants' and ACO providers'/suppliers' rights and obligations in and representation by the ACO, and how the opportunity to receive shared savings or other financial arrangements will encourage ACO participants and ACO providers/suppliers to adhere to the quality assurance and improvement program and evidence-based clinical guidelines.

* * * * *

(iii) Materials documenting the ACO's organization and management structure, including an organizational chart, a list of committees (including names of committee members) and their structures, and job descriptions for senior administrative and clinical leaders specifically noted in § 425.108 and § 425.112(a)(2).

(iv) Evidence that the governing body—

(A) Is an identifiable body;

(B) Represents a mechanism for shared governance for ACO participants;

(C) Is composed of representatives of its ACO participants; and

(D) Is at least 75 percent controlled by its ACO participants.

* * * * *

(3) If an ACO requests an exception to the governing body requirement in § 425.106(c)(2) or (c)(3), the ACO must describe—

(i) Why it seeks to differ from the requirement; and

(ii) If seeking an exception to (c)(2), how the ACO will provide meaningful representation in ACO governance by Medicare beneficiaries.

(iii) If seeking an exception to the requirement at (c)(3), why the ACO is unable to meet the requirement and how it will involve ACO participants in innovative ways in ACO governance.

* * * * *

(5) * * *

(i) The ACO must submit a list of all ACO participants and ACO providers/suppliers in accordance with § 425.118.

* * * * *

(6) As part of the application process and upon request by CMS, the ACO must submit documents demonstrating that its ACO participants, ACO providers/suppliers, and other individuals or entities performing

functions or services related to ACO activities are required to comply with the requirements of the Shared Savings Program. The evidence to be submitted must include, without limitation, sample or form agreements and, in the case of ACO participant agreements, the first and signature page(s) of each executed ACO participant agreement. CMS may request all pages of an executed ACO participant agreement to confirm that it conforms to the sample form agreement submitted by the ACO. The ACO must certify that all of its ACO participant agreements comply with the requirements of this part.

* * * * *

(f) *Assurance of ability to repay.* (1) An ACO must have the ability to repay all shared losses for which it may be liable under a two-sided model.

(i) As part of the application or participation agreement renewal process, an ACO that is seeking to participate under a two-sided model of the Shared Savings Program must submit for CMS approval documentation that it is capable of repaying shared losses that it may incur during the agreement period.

(ii) The documentation specified in paragraph (f)(1)(i) of this section must include details supporting the adequacy of the mechanism for repaying shared losses equal to at least 1 percent of the ACO's total per capita Medicare parts A and B fee-for-service expenditures for its assigned beneficiaries based on expenditures used to calculate the benchmark for the applicable agreement period, as estimated by CMS at the time of application or participation agreement renewal.

(2) An ACO may demonstrate its ability to repay shared losses by placing funds in escrow, obtaining a surety bond, establishing a line of credit (as evidenced by a letter of credit that the Medicare program can draw upon), or establishing a combination of such repayment mechanisms, that will ensure its ability to repay the Medicare program.

(3) An ACO participating under a two-sided model must demonstrate the adequacy of this repayment mechanism prior to the start of each agreement period in which it takes risk, and upon request thereafter. After the repayment mechanism has been used to repay any portion of shared losses owed to CMS, the ACO must replenish the amount of funds available through the repayment mechanism within 90 days.

(4) The repayment mechanism must be in effect for a sufficient period of time after the conclusion of the agreement period to permit CMS to calculate the amount of shared losses owed and to collect this amount from the ACO.

(g) *Consideration of claims billed under merged and acquired Medicare-enrolled TINs.* An ACO may request that CMS consider, for purposes of beneficiary assignment and establishing the ACO's benchmark under § 425.602, claims billed by Medicare-enrolled entities' TINs that have been acquired through sale or merger by an ACO participant.

(1) The ACO may include an acquired Medicare-enrolled entity's TIN on its ACO participant list under the following circumstances:

(i) The ACO participant has subsumed the acquired entity's TIN in its entirety, including all of the providers and suppliers that reassigned their right to receive Medicare payment to the acquired entity's Medicare-enrolled TIN.

(ii) Each provider or supplier that previously reassigned his or her right to receive Medicare payment to the acquired entity's TIN has reassigned his or her right to receive Medicare payment to the TIN of the acquiring ACO participant and has been added to the ACO provider/supplier list under paragraph (c)(5) of the section.

(iii) The acquired entity's TIN is no longer used to bill Medicare.

(2) The ACO must submit the following supporting documentation in the form and manner specified by CMS.

(i) An attestation that—

(A) Identifies by Medicare-enrolled TIN both the acquired entity and the ACO participant that acquired it;

(B) Specifies that all the providers and suppliers that previously reassigned their right to receive Medicare payment to the acquired entity's TIN have reassigned such right to the TIN of the identified ACO participant and have been added to the ACO provider/supplier list under paragraph (c)(5) of this section; and

(C) Specifies that the acquired entity's TIN is no longer used to bill Medicare.

(ii) Documentation sufficient to demonstrate that the acquired entity's TIN was merged with or purchased by the ACO participant.

■ 15. Amend § 425.206 by revising paragraph (a) to read as follows:

§ 425.206 Evaluation procedures for applications.

(a) *Basis for evaluation and determination.* (1) CMS evaluates an ACO's application to determine whether an applicant satisfies the requirements of this part and is qualified to participate in the Shared Savings Program, and approves or denies applications accordingly. Applications are approved or denied on the basis of the following:

(i) Information contained in and submitted with the application by an application deadline specified by CMS.

(ii) Supplemental information that was submitted in response to a CMS request and by a deadline specified by CMS.

(iii) Other information available to CMS.

(2) CMS notifies an ACO applicant when supplemental information is required for CMS to make a determination on the ACO's application and provides an opportunity for the ACO to submit the information.

(3) CMS may deny an application if an ACO applicant fails to submit requested information by the deadlines established by CMS.

* * * * *

■ 16. Amend § 425.212 by revising the section heading and paragraph (a) to read as follows:

§ 425.212 Changes to program requirements during the agreement period.

(a) An ACO is subject to all regulatory changes that become effective during the agreement period, with the exception of the following program areas, unless otherwise required by statute:

(1) Eligibility requirements concerning the structure and governance of ACOs.

(2) Calculation of sharing rate.

* * * * *

■ 17. Amend § 425.214 by:

■ A. Revising the section heading.

■ B. Removing paragraph (a).

■ C. Redesignating paragraphs (b) and (c) as paragraphs (a) and (b), respectively.

■ D. Revising newly redesignated paragraph (a).

■ E. In newly redesignated paragraph (b) introductory text, removing the phrase ''Upon receiving'' and adding in its place the phrase ''Upon becoming aware of a significant change or receiving''.

■ F. In newly redesignated paragraphs (b)(2) and (4) by removing the term ''agreement'' and adding in its place the terms ''participation agreement''.

The revisions read as follows:

§ 425.214 Managing changes to the ACO during the agreement period.

(a)(1) An ACO must notify CMS within 30 days of any significant change.

(2) An ACO's failure to notify CMS of a significant change does not preclude CMS from determining that the ACO has experienced a significant change.

(3) A ''significant change'' occurs when an ACO is no longer able to meet the eligibility or program requirements of this part.

* * * * *

§ 425.216 [Amended]

■ 18. Amend § 425.216(b)(2) by removing the term ''ACO's agreement'' and adding in its place the terms ''participation agreement''.

■ 19. Amend § 425.218 by:

■ A. Revising the section heading.

■ B. Adding paragraphs (b)(4) and (5).

The revision and additions read as follows:

§ 425.218 Termination of the participation agreement by CMS.

* * * * *

(b) * * *

(4) Failure to comply with CMS requests for documentation or other information by the deadline specified by CMS.

(5) Submitting false or fraudulent data or information.

* * * * *

■ 20. Amend § 425.220 by revising the section heading and removing and reserving paragraph (b).

The revision reads as follows:

§ 425.220 Termination of the participation agreement by the ACO.

* * * * *

■ 21. Add § 425.221 to read as follows:

§ 425.221 Close-out procedures and payment consequences of early termination.

(a) *Close-out procedures.* (1) An ACO whose participation agreement has expired or is terminated by CMS under § 425.218 or by the ACO under § 425.220 must implement close-out procedures including but not limited to the following issues in a form and manner and by a deadline specified by CMS:

(i) Notice to ACO participants of termination.

(ii) Record retention.

(iii) Data sharing.

(iv) Quality reporting.

(v) Beneficiary continuity of care.

(2) ACOs that fail to complete close-out procedures in the form and manner and by the deadline specified by CMS will not be eligible to share in savings.

(b) *Payment consequences of early termination.* (1) An ACO whose participation agreement is terminated by the ACO under § 425.220 is eligible to receive shared savings for the performance year during which the termination becomes effective only if—

(i) CMS designates or approves an effective date of termination of December 31st of such performance year;

(ii) The ACO has completed all close-out procedures by the deadline specified by CMS; and

(iii) The ACO has satisfied the criteria for sharing in savings for the performance year.

(2) An ACO that terminates its participation agreement under § 425.220 before December 31 of a performance year or whose participation agreement is terminated at any time by CMS under § 425.218 is not eligible to receive shared savings for the performance year during which the termination becomes effective.

■ 22. Amend § 425.222 by revising paragraph (c) to read as follows:

§ 425.222 Re-application after termination.

* * * * *

(c) An ACO whose participation agreement was previously terminated may reenter the program for a subsequent agreement period.

(1) If the termination occurred less than half way through the agreement period, an ACO that was previously under a one-sided model may reenter the program under the one-sided model or a two-sided model. If the ACO reenters the program under the one-sided model, the ACO will be considered to be in the same agreement period under the one-sided model as it was at the time of termination.

(2) If the termination occurred more than half way through the agreement period, an ACO that was previously in its first agreement period under the one-sided model may reenter the program under the one-sided model or a two-sided model. If the ACO reenters the program under the one-sided model, the ACO will be considered to be in its second agreement period under the one-sided model. An ACO that was previously in its second agreement period under the one-sided model must reenter the program under a two-sided model.

(3) Regardless of the date of termination, an ACO that was previously under a two-sided model may only reapply for participation in a two-sided model.

■ 23. Add § 425.224 to subpart C to read as follows:

§ 425.224 Renewal of participation agreements.

(a) *General rules.* An ACO may request renewal of its participation agreement for a second or subsequent agreement period.

(1) In order to obtain a determination regarding whether it meets the requirements for renewal of its participation agreement, the ACO must submit a complete renewal request in the form and manner and by the deadline specified by CMS.

(2) An ACO executive who has the authority to legally bind the ACO must certify to the best of his or her knowledge, information, and belief that the information contained in the renewal request is accurate, complete, and truthful.

(3) An ACO that seeks renewal of its participation agreement and was newly formed after March 23, 2010, as defined in the Antitrust Policy Statement, must agree that CMS can share a copy of its renewal request with the Antitrust Agencies.

(b) *Review of renewal request.* (1) CMS determines whether to renew a participation agreement based on an evaluation of all of the following factors:

(i) Whether the ACO satisfies the criteria for operating under the selected risk track.

(ii) The ACO's history of compliance with the requirements of the Shared Savings Program.

(iii) Whether the ACO has established that it is in compliance with the eligibility and other requirements of the Shared Savings Program, including the ability to repay losses, if applicable.

(iv) Whether the ACO met the quality performance standard during at least 1of the first 2 years of the previous agreement period.

(v) For ACOs under a two-sided model, whether the ACO has repaid losses owed to the program that it generated during the first 2 years of the previous agreement period.

(vi) The results of a program integrity screening of the ACO, its ACO participants, and its ACO providers/suppliers (conducted in accordance with § 425.304(b)).

(2) Renewal requests are approved or denied on the basis of the following information:

(i) Information contained in and submitted with the renewal request by a deadline specified by CMS.

(ii) Supplemental information that was submitted by a deadline specified by CMS in response to a CMS request for information.

(iii) Other information available to CMS.

(3) CMS notifies the ACO when supplemental information is required for CMS to make such a determination and provides an opportunity for the ACO to submit the information.

(c) *Notice of determination.* (1) CMS notifies the ACO in writing of its determination to approve or deny the ACO's renewal request.

(2) If CMS denies the renewal request, the notice of determination—

(i) Specifies the reasons for the denial; and

(ii) Informs the ACO of its right to request reconsideration review in accordance with the procedures specified in subpart I of this part.

§ 425.304 [Amended]

■ 24. Amend § 425.304 by removing paragraph (d).

■ 25. Revise § 425.306 to read as follows:

§ 425.306 Participant agreement and exclusivity of ACO participants.

(a) Each ACO participant must commit to the term of the participation agreement and sign an ACO participant agreement that complies with the requirements of this part.

(b)(1) Except as specified in paragraph (b)(2) of this section, ACO participants are not required to be exclusive to one Shared Savings Program ACO.

(2) Each ACO participant that submits claims for primary care services used to determine the ACO's assigned population under subpart E of this part must be exclusive to one Shared Savings Program ACO.

■ 26. Revise § 425.308 to read as follows:

§ 425.308 Public reporting and transparency.

(a) *ACO public reporting Web page.* Each ACO must create and maintain a dedicated Web page on which it publicly reports the information set forth in paragraph (b) of this section. The ACO must report the address of such Web page to CMS in a form and manner specified by CMS and must notify CMS of changes to the web address in the form and manner specified by CMS.

(b) *Information to be reported.* The ACO must publicly report the following information in a standardized format specified by CMS:

(1) Name and location.

(2) Primary contact.

(3) Organizational information, including all of the following:

(i) Identification of ACO participants.

(ii) Identification of participants in joint ventures between ACO professionals and hospitals.

(iii) Identification of the members of its governing body.

(iv) Identification of key clinical and administrative leadership.

(v) Identification of associated committees and committee leadership.

(vi) Identification of the types of ACO participants or combinations of ACO participants (as listed in § 425.102(a)) that formed the ACO.

(4) Shared savings and losses information, including the following:

(i) Amount of any payment of shared savings received by the ACO or shared losses owed to CMS.

(ii) Total proportion of shared savings invested in infrastructure, redesigned care processes and other resources required to support the three-part aim goals of better health for populations, better care for individuals and lower growth in expenditures, including the proportion distributed among ACO participants.

(5) The ACO's performance on all quality measures.

(6) Use of payment rule waivers under § 425.612, if applicable.

(c) *Approval of public reporting information.* Information reported on an ACO's public reporting Web page in compliance with the requirements of the standardized format specified by CMS is not subject to marketing review and approval under § 425.310.

(d) *Public reporting by CMS.* CMS may publicly report ACO-specific information, including but not limited to the ACO public reporting Web page address and the information required to be publicly reported under paragraph (b) of this section.

■ 27. Amend § 425.312, effective November 1, 2015, by revising paragraph (a) and removing and reserving paragraph (b).

The revision reads as follows:

§ 425.312 Notification to beneficiaries of participation in the shared savings program.

(a) ACO participants must notify beneficiaries at the point of care that their ACO providers/suppliers are participating in the Shared Savings Program and of the opportunity to decline claims data sharing under § 425.708.

(1) Notification is carried out when an ACO participant posts signs in its facilities and, in settings in which beneficiaries receive primary care services, by making standardized written notices available upon request.

(2) The ACO must use template language developed by CMS for notifications described in paragraph (a)(1) of this section.

* * * * *

§ 425.314 [Amended]

■ 28. Amend § 425.314 (c) by removing the term ''agreement'' and adding in its place the terms ''participation agreement''.

§ 425.316 [Amended]

■ 29. Amend § 425.316 by:

■ A. Removing paragraphs (c)(3) and (4).

■ B. Redesignating paragraph (c)(5) as (c)(3).

■ C. In newly redesignated paragraph (c)(3) by removing the phrase ''fully and completely'' and adding in its place the phrase ''accurately, completely, and timely''.

■ 30. Amend § 425.400 by—

■ A. Adding paragraph (a)(1) introductory text.

■ B. Revising paragraph (a)(1)(i).

■ C. In paragraph (a)(1)(ii), by removing the phrase ''by a physician who is an ACO provider/supplier during the performance year'' and adding in its place the phrase ''by a physician who is an ACO professional during each performance year''.

■ D. Adding paragraph (a)(2) subject heading and paragraph (a)(3).

The additions read as follows:

§ 425.400 General.

(a)(1) *General.* CMS employs the assignment methodology described in § 425.402 and § 425.404 for purposes of benchmarking, preliminary prospective assignment (including quarterly updates), retrospective reconciliation, and prospective assignment.

(i) A Medicare fee-for-service beneficiary is assigned to an ACO if the—

(A) Beneficiary meets the eligibility criteria under § 425.401(a); and

(B) Beneficiary's utilization of primary care services meets the criteria established under the assignment methodology described in § 425.402 and § 425.404.

* * * * *

(2) *Assignment under Tracks 1 and 2.*

* * * * *

(3) *Prospective assignment under Track 3.* (i) Medicare fee-for-service beneficiaries are prospectively assigned to an ACO under Track 3 at the beginning of each benchmark or performance year based on the beneficiary's use of primary care services in the most recent 12 months for which data are available, using the assignment methodology described in §§ 425.402 and 425.404.

(ii) Beneficiaries that are prospectively assigned to an ACO under paragraph (a)(3)(i) of this section will remain assigned to the ACO at the end of the benchmark or performance year unless they meet any of the exclusion criteria under § 425.401(b).

* * * * *

■ 31. Add § 425.401 to read as follows:

§ 425.401 Criteria for a beneficiary to be assigned to an ACO.

(a) A beneficiary may be assigned to an ACO under the assignment methodology in §§ 425.402 and 425.404, for a performance or benchmark year, if

the beneficiary meets all of the following criteria during the assignment window:

(1)(i) Has at least 1 month of Part A and Part B enrollment; and

(ii) Does not have any months of Part A only or Part B only enrollment.

(2) Does not have any months of Medicare group (private) health plan enrollment.

(3) Is not assigned to any other Medicare shared savings initiative.

(4) Lives in the United States or U.S. territories and possessions, based on the most recent available data in our beneficiary records regarding the beneficiary's residence at the end of the assignment window.

(b) A beneficiary will be excluded from the prospective assignment list of an ACO participating under Track 3 at the end of a performance or benchmark year and quarterly during each performance year, if the beneficiary meets any of the following criteria during the performance or benchmark year:

(1)(i) Does not have at least 1 month of Part A and Part B enrollment; and

(ii) Has any months of Part A only or Part B only enrollment.

(2) Has any months of Medicare group (private) health plan enrollment.

(3) Did not live in the United States or U.S. territories and possessions, based on the most recent available data in our beneficiary records regarding the beneficiary's residency at the end of the year.

■ 32. Amend § 425.402 by:

■ A. Revising paragraph (a) introductory text.

■ B. In paragraphs (a)(1)(ii) introductory text and (a)(1)(ii)(A) by removing the phrase ''ACO providers/suppliers'' and adding in its place the phrase ''ACO professionals''.

■ C. In paragraphs (a)(2) introductory text and (a)(2)(i) by removing the phrase ''ACO professionals who are ACO providers/suppliers in'' and adding in its place the phrase ''ACO professionals in''.

■ D. Adding paragraphs (b) and (c).

The revision and additions read as follows:

§ 425.402 Basic assignment methodology.

(a) For performance years 2012 through 2015, CMS employs the following step-wise methodology to assign Medicare beneficiaries to an ACO after identifying all patients that had at least one primary care service with a physician who is an ACO professional of that ACO:

* * * * *

(b) For performance year 2016 and subsequent performance years, CMS employs the following step-wise methodology to assign Medicare fee-for-service beneficiaries to an ACO:

(1) Identify all beneficiaries that had at least one primary care service with a physician who is an ACO professional in the ACO and who is a primary care physician as defined under § 425.20 or who has one of the primary specialty designations included in paragraph (c) of this section.

(2) Identify all primary care services furnished to beneficiaries identified in paragraph (b)(1) of this section by ACO professionals of that ACO who are primary care physicians as defined under § 425.20, non-physician ACO professionals, and physicians with specialty designations included in paragraph (c) of this section during the applicable assignment window.

(3) Under the first step, a beneficiary identified in paragraph (b)(1) of this section is assigned to an ACO if the allowed charges for primary care services furnished to the beneficiary by primary care physicians who are ACO professionals and non-physician ACO professionals in the ACO are greater than the allowed charges for primary care services furnished by primary care physicians, nurse practitioners, physician assistants, and clinical nurse specialists who are—

(i) ACO professionals in any other ACO; or

(ii) Not affiliated with any ACO and identified by a Medicare-enrolled billing TIN.

(4) The second step considers the remainder of the beneficiaries identified in paragraph (b)(1) of this section who have not had a primary care service rendered by any primary care physician, nurse practitioner, physician assistant, or clinical nurse specialist, either inside the ACO or outside the ACO. The beneficiary will be assigned to an ACO if the allowed charges for primary care services furnished to the beneficiary by physicians who are ACO professionals with specialty designations as specified in paragraph (c) of this section are greater than the allowed charges for primary care services furnished by physicians with specialty designations as specified in paragraph (c) of this section—

(i) Who are ACO professionals in any other ACO; or

(ii) Who are unaffiliated with an ACO and are identified by a Medicare-enrolled billing TIN.

(c) ACO professionals considered in the second step of the assignment methodology in paragraph (b)(4) of this section include physicians who have one of the following primary specialty designations:

(1) Cardiology.

(2) Osteopathic manipulative medicine.

(3) Neurology.

(4) Obstetrics/gynecology.

(5) Sports medicine.

(6) Physical medicine and rehabilitation.

(7) Psychiatry.

(8) Geriatric psychiatry.

(9) Pulmonary disease.

(10) Nephrology.

(11) Endocrinology.

(12) Multispecialty clinic or group practice.

(13) Addiction medicine.

(14) Hematology.

(15) Hematology/oncology.

(16) Preventive medicine.

(17) Neuropsychiatry.

(18) Medical oncology.

(19) Gynecology/oncology.

■ 33. Amend § 425.404 by revising paragraph (b) to read as follows:

§ 425.404 Special assignment conditions for ACOs including FQHCs and RHCs.

* * * * *

(b) Under the assignment methodology in § 425.402, CMS treats a service reported on an FQHC/RHC claim as a primary care service —

(1) If the claim includes a HCPCS or revenue center code that meets the definition of primary care services under § 425.20;

(2) Performed by a primary care physician if the NPI of a physician identified in the attestation provided under paragraph (a) of this section is reported on the claim for a primary care service (as described in paragraph (b)(1) of this section) as the attending provider; and

(3) Performed by a non-physician ACO professional if the NPI reported on the claim for a primary care service (as described in paragraph (b)(1) of this section) as the attending provider is an ACO professional but is not identified in the attestation provided under paragraph (a) of this section.

■ 34. Amend § 425.600 by:

■ A. In paragraph (a)(2), by removing the phrase ''under the two-sided model'' and adding in its place the phrase ''under a two-sided model''.

■ B. Adding paragraph (a)(3).

■ C. Revising paragraph (b).

■ D. In paragraph (c) by removing the phrase ''net loss during the initial agreement period may reapply'' and adding in its place the phrase ''net loss during a previous agreement period may reapply''.

The addition and revision read as follows:

§ 425.600 Selection of risk model.

(a) * * *

(3) *Track 3.* Under Track 3, the ACO operates under a two-sided model (as described under § 425.610), sharing both savings and losses with the Medicare program for the agreement period.

(b) ACOs may operate under the one-sided model for a maximum of two agreement periods. An ACO may not operate under the one-sided model for a second agreement period unless the—

(1) Immediately preceding agreement period was under the one-sided model; and

(2) The ACO meets the criteria established for ACOs seeking to renew their agreements under § 425.224(b).

* * * * *

■ 35. Amend § 425.602 as follows:

■ A. By revising the section heading.

■ B. In paragraph (a)(7) introductory text by removing the phrase ''Weights each year of the benchmark using'' and adding in its place the phrase ''Weights each year of the benchmark for the initial agreement period using''.

■ C. In paragraph (a)(8) by removing the phrase ''The ACO's benchmark may be adjusted'' and adding in its place the phrase ''The ACO's benchmark will be adjusted in accordance with § 425.118(b)''.

■ D. By revising paragraph (c).

The revisions read as follows:

§ 425.602 Establishing, updating, and resetting the benchmark.

* * * * *

(c) *Resetting the benchmark.* (1) An ACO's benchmark will be reset at the start of each subsequent agreement period.

(2) When resetting the ACO's benchmark for a subsequent agreement period—

(i) Each benchmark year will be weighted equally

(ii) An adjustment will be made to account for the average per capita amount of savings generated during the ACO's previous agreement period. The adjustment will be limited to the average number of assigned beneficiaries (expressed as person years) under the ACO's previous agreement period.

■ 36. Amend § 425.606 as follows:

■ A. By revising the section heading.

■ B. In paragraph (a) introductory text, by removing the phrase ''under the two-sided model,'' and adding in its place the phrase ''under Track 2,''

■ C. By revising paragraph (b).

■ D. In paragraph (d), by removing the phrase ''under the two-sided model'' and adding in its place the phrase ''under Track 2''.

■ E. In paragraph (e)(2), by removing the phrase ''under the two-sided model'' and adding in its place the phrase ''under Track 2''.

■ F. In paragraph (g)(1), by removing the phrase ''in a two-sided model'' and adding in its place the phrase ''in Track 2''.

The revisions read as follows:

§ 425.606 Calculation of shared savings and losses under Track 2.

* * * * *

(b) *Minimum savings or loss rate.* (1)(i) For agreement periods beginning in 2012 through 2015, the ACO's MSR and MLR are set at 2 percent.

(ii) For agreement periods beginning in 2016 and subsequent years, as part of the ACO's application for, or renewal of, program participation, the ACO must choose from the following options for establishing the MSR/MLR for the duration of the agreement period:

(A) Zero percent MSR/MLR.

(B) Symmetrical MSR/MLR in a 0.5 percent increment between 0.5–2.0 percent.

(C) Symmetrical MSR/MLR that varies, based on the number of beneficiaries assigned to the ACO under subpart E of this part. The MSR for an ACO under Track 2 is the same as the MSR that would apply in the one-sided model under § 425.604(b) and is based on the number of assigned beneficiaries. The MLR under Track 2 is equal to the negative MSR.

(2) To qualify for shared savings under Track 2, an ACO's average per capita Medicare expenditures for the performance year must be below its updated benchmark costs for the year by at least the MSR established for the ACO.

(3) To be responsible for sharing losses with the Medicare program, an ACO's average per capita Medicare expenditures for the performance year must be above its updated benchmark costs for the year by at least the MLR established for the ACO.

* * * * *

■ 37. Add § 425.610 to subpart G to read as follows:

§ 425.610 Calculation of shared savings and losses under Track 3.

(a) *General rule.* For each performance year, CMS determines whether the estimated average per capita Medicare expenditures under the ACO for Medicare fee-for-service beneficiaries for Parts A and B services are above or below the updated benchmark determined under § 425.602. In order to qualify for a shared savings payment under Track 3, or to be responsible for sharing losses with CMS, an ACO's average per capita Medicare expenditures under the ACO for Medicare fee-for-service beneficiaries for Parts A and B services for the performance year must be below or above the updated benchmark, respectively, by at least the minimum savings or loss rate under paragraph (b) of this section.

(1) *Newly assigned beneficiaries.* CMS uses an ACO's HCC prospective risk score to adjust for changes in severity and case mix in this population.

(2) *Continuously assigned beneficiaries.* (i) CMS uses demographic factors to adjust for changes in the continuously assigned beneficiary population.

(ii) If the prospective HCC risk score is lower in the performance year for this population, CMS adjusts for changes in severity and case mix for this population using this lower prospective HCC risk score.

(3) Assigned beneficiary changes in demographics and health status are used to adjust benchmark expenditures as described in § 425.602(a). In adjusting for health status and demographic changes CMS makes separate adjustments for each of the following populations of beneficiaries:

(i) ESRD.

(ii) Disabled.

(iii) Aged/dual eligible Medicare and Medicaid beneficiaries.

(iv) Aged/non-dual eligible Medicare and Medicaid beneficiaries.

(4) To minimize variation from catastrophically large claims, CMS truncates an assigned beneficiary's total annual Parts A and B fee-for-service per capita expenditures at the 99th percentile of national Medicare fee-for-service expenditures as determined for each performance year.

(5) CMS uses a 3-month claims run out with a completion factor to calculate an ACO's per capita expenditures for each performance year.

(6) Calculations of the ACO's expenditures will include the payment amounts included in Part A and B fee-for-service claims.

(i) These calculations will exclude indirect medical education (IME) and disproportionate share hospital (DSH) payments.

(ii) These calculations will take into consideration individually beneficiary identifiable payments made under a demonstration, pilot or time limited program.

(7) In order to qualify for a shared savings payment, the ACO's average per capita Medicare expenditures for the performance year must be below the applicable updated benchmark by at least the minimum savings rate established for the ACO under paragraph (b) of this section.

(b) *Minimum savings or loss rate.* (1) As part of the ACO's application for, or renewal of, program participation, the ACO must choose from the following options for establishing the MSR/MLR for the duration of the agreement period:

(i) Zero percent MSR/MLR

(ii) Symmetrical MSR/MLR in a 0.5 percent increment between 0.5–2.0 percent.

(iii) Symmetrical MSR/MLR that varies, based on the number of beneficiaries assigned to the ACO under subpart E of this part. The MSR for an ACO under Track 3 is the same as the MSR that would apply in the one-sided model under § 425.604(b) and is based on the number of assigned beneficiaries. The MLR under Track 3 is equal to the negative MSR.

(2) To qualify for shared savings under Track 3, an ACO's average per capita Medicare expenditures for the performance year must be below its updated benchmark costs for the year by at least the MSR established for the ACO.

(3) To be responsible for sharing losses with the Medicare program, an ACO's average per capita Medicare expenditures for the performance year must be above its updated benchmark costs for the year by at least the MLR established for the ACO.

(c) *Qualification for shared savings payment.* To qualify for shared savings, an ACO must meet the minimum savings rate requirement established under paragraph (b) of this section, meet the minimum quality performance standards established under § 425.502, and otherwise maintain its eligibility to participate in the Shared Savings Program under this part.

(d) *Final sharing rate.* An ACO that meets all the requirements for receiving shared savings payments under Track 3 will receive a shared savings payment of up to 75 percent of all the savings under the updated benchmark, as determined on the basis of its quality performance under § 425.502 (up to the performance payment limit described in paragraph (e)(2) of this section).

(e) *Performance payment.* (1) If an ACO qualifies for savings by meeting or exceeding the MSR, the final sharing rate will apply to an ACO's savings on a first dollar basis.

(2) The amount of shared savings an eligible ACO receives under Track 3 may not exceed 20 percent of its updated benchmark.

(f) *Shared loss rate.* The shared loss rate—

(1) For an ACO that is required to share losses with the Medicare program for expenditures over the updated benchmark, the amount of shared losses is determined based on the inverse of its final sharing rate described in § 425.610(d) (that is, 1 minus the final shared savings rate determined under § 425.610(d));

(2) May not exceed 75 percent; and

(3) May not be less than 40 percent.

(g) *Loss recoupment limit.* The amount of shared losses for which an eligible ACO is liable may not exceed 15 percent of its updated benchmark as determined under § 425.602.

(h) *Notification of savings and losses.* (1) CMS notifies an ACO in writing regarding whether the ACO qualifies for a shared savings payment, and if so, the amount of the payment due.

(2) CMS provides written notification to an ACO of the amount of shared losses, if any, that it must repay to the program.

(3) If an ACO has shared losses, the ACO must make payment in full to CMS within 90 days of receipt of notification.

■ 38. Add § 425.612 to subpart G to read as follows:

§ 425.612 Waivers of payment rules or other Medicare requirements.

(a) *General.* CMS may waive certain payment rules or other Medicare requirements as determined necessary to carry out the Shared Savings Program under this part.

(1) *SNF 3-day rule.* For performance year 2017 and subsequent performance years, CMS waives the requirement in section 1861(i) of the Act for a 3-day inpatient hospital stay prior to a Medicare-covered post-hospital extended care service for eligible beneficiaries prospectively assigned to ACOs participating in Track 3 that receive otherwise covered post-hospital extended care services furnished by an eligible SNF that has entered into a written agreement to partner with the ACO for purposes of this waiver. All other provisions of the statute and regulations regarding Medicare Part A post-hospital extended care services continue to apply.

(i) ACOs must submit to CMS supplemental application information sufficient to demonstrate the ACO has the capacity to identify and manage beneficiaries who would be either directly admitted to a SNF or admitted to a SNF after an inpatient hospitalization of fewer than 3-days in the form and manner specified by CMS. Application materials include but are not limited to, the following:

(A) Narratives describing how the ACO plans to implement the waiver. Narratives must include the following:

(*1*) The communication plan between the ACO and its SNF affiliates.

(*2*) A care management plan for beneficiaries admitted to a SNF affiliate.

(*3*) A beneficiary evaluation and admission plan approved by the ACO medical director and the healthcare professional responsible for the ACO's quality improvement and assurance processes under § 425.112.

(*4*) Any financial relationships between the ACO, SNF, and acute care hospitals.

(B) A list of SNFs with whom the ACO will partner along with executed written SNF affiliate agreements between the ACO and each listed SNF.

(C) Documentation demonstrating that each SNF included on the list provided under paragraph (a)(1)(i)(B) of this section has an overall rating of 3 or higher under the CMS 5-star Quality Rating System.

(ii) In order to be eligible to receive covered SNF services under the waiver, a beneficiary must meet the following requirements:

(A) Is prospectively assigned to the ACO for the performance year in which they are admitted to the eligible SNF.

(B) Does not reside in a SNF or other long-term care setting.

(C) Is medically stable.

(D) Does not require inpatient or further inpatient hospital evaluation or treatment.

(E) Have certain and confirmed diagnoses.

(F) Have an identified skilled nursing or rehabilitation need that cannot be provided as an outpatient.

(G) Have been evaluated and approved for admission to the SNF within 3 days prior to the SNF admission by an ACO provider/supplier who is a physician, consistent with the ACO's beneficiary evaluation and admission plan.

(iii) SNFs eligible to partner and enter into written agreements with ACOs for purposes of this waiver must do the following:

(A) Have and maintain an overall rating of 3 or higher under the CMS 5-star Quality Rating System.

(B) Sign a SNF affiliate agreement with the ACO that includes elements determined by CMS including but not limited to the following:

(*1*) Agreement to comply with the requirements and conditions of this part, including but not limited to those specified in the participation agreement with CMS.

(*2*) Effective dates of the SNF affiliate agreement.

(*3*) Agreement to implement and comply with the ACO's beneficiary evaluation and admission plan and the care management plan.

(*4*) Agreement to validate the eligibility of a beneficiary to receive

covered SNF services in accordance with the waiver prior to admission.

(*5*) Remedial processes and penalties that will apply for non-compliance.

(2) [Reserved].

(b) *Review and determination of request to use waivers.* (1) In order to obtain a determination regarding whether the ACO may use waivers under this section, an ACO must submit a waiver request to CMS in the form and manner and by a deadline specified by CMS.

(2) An ACO executive who has the authority to legally bind the ACO must certify to the best of his or her knowledge, information, and belief that the information contained in the waiver request submitted under paragraph (b)(1) of this section is accurate, complete, and truthful.

(3) CMS evaluates an ACO's waiver request to determine whether it satisfies the requirements of this part and approves or denies waiver requests accordingly. Waiver requests are approved or denied on the basis of the following:

(i) Information contained in and submitted with the waiver request by a deadline specified by CMS.

(ii) Supplemental information submitted by a deadline specified by CMS in response to a CMS request for information.

(iii) Screening of the ACO, ACO participants, ACO providers/suppliers, and other individuals or entities providing services to Medicare beneficiaries in accordance with the terms of the waiver.

(iv) Other information available to CMS.

(4) CMS may deny a waiver request if an ACO fails to submit requested information by the deadlines established by CMS.

(c) *Effective and termination date of waivers.* (1) Waivers are effective upon CMS notification of approval for the waiver or the start date of the participation agreement, whichever is later.

(2) Waivers do not extend beyond the end of the participation agreement.

(3) If CMS terminates the participation agreement under § 425.218, the waiver ends on the date specified by CMS in the termination notice.

(4) If the ACO terminates the participation agreement, the waiver ends on the effective date of termination as specified in the written notification required under § 425.220.

(d) *Monitoring and termination of waivers.* (1) ACOs with approved waivers are required to post their use of the waiver as part of public reporting under § 425.308.

(2) CMS monitors and audits the use of such waivers in accordance with § 425.316.

(3) CMS reserves the right to deny or revoke a waiver if an ACO, its ACO participants, ACO providers/suppliers or other individuals or entities providing services to Medicare beneficiaries are not in compliance with the requirements of this part or if any of the following occur:

(i) The waiver is not used as described in the ACO's waiver request under paragraph (b)(1) of this section.

(ii) The ACO does not successfully meet the quality reporting standard under subpart F of this part.

(iii) CMS identifies a program integrity issue affecting the ACO's use of the waiver.

(e) *Other rules governing use of waivers.* (1) Waivers under this section do not protect financial or other arrangements between or among ACOs, ACO participants, ACO providers/suppliers, or other individual or entities providing services to Medicare beneficiaries from liability under the fraud and abuse laws or any other applicable laws.

(2) Waivers under this section do not protect any person or entity from liability for any violation of law or regulation for any conduct other than the conduct permitted by a waiver under paragraph (a) of this section.

(3) ACOs must ensure compliance with all claims submission requirements, except those expressly waived under paragraph (a) of this section.

■ 39. Amend § 425.702 by:

■ A. Redesignating paragraphs (c)(1) introductory text, (c)(1)(i), (c)(1)(ii), (c)(1)(iii), and (c)(1)(iv) as paragraphs (c)(1)(i) introductory text, (c)(1)(i)(A), (c)(1)(i)(B), (c)(1)(i)(C), and (c)(1)(i)(D), respectively.

■ B. In newly redesignated paragraph (c)(1)(i) introductory text by removing the phrase ''At the beginning'' and adding in its place the phrase ''For performance years 2012 through 2015, at the beginning''.

■ C. Adding paragraph (c)(1)(ii).

The addition reads as follows:

§ 425.702 Aggregate reports.

* * * * *

(c) * * *

(1) * * *

(ii) For performance year 2016 and subsequent performance years, at the beginning of the agreement period, during each quarter (and in conjunction with the annual reconciliation), and at the beginning of each performance year, CMS, upon the ACO's request for the data for purposes of population-based activities relating to improving health or reducing growth in health care costs, process development, case management, and care coordination, provides the ACO with information about its fee-for-service population.

(A) Under Tracks 1 and 2, the following information is made available regarding preliminarily prospectively assigned beneficiaries and beneficiaries that received a primary care service during the previous 12 months from one of the ACO participants that submits claims for primary care services used to determine the ACO's assigned population under subpart E of this part:

(*1*) Beneficiary name.

(*2*) Date of birth.

(*3*) Health Insurance Claim Number (HICN).

(*4*) Sex.

(B) Under Tracks 1 and 2, information in the following categories, which represents the minimum data necessary for ACOs to conduct health care operations work is made available regarding preliminarily prospectively assigned beneficiaries:

(*1*) Demographic data such as enrollment status.

(*2*) Health status information such as risk profile and chronic condition subgroup.

(*3*) Utilization rates of Medicare services such as the use of evaluation and management, hospital, emergency, and post-acute services, including the dates and place of service.

(*4*) Expenditure information related to utilization of services.

(C) The information under paragraphs (c)(1)(ii)(A) and (c)(1)(ii)(B) of this section will be made available to ACOs in Track 3, but will be limited to the ACO's prospectively assigned beneficiaries.

* * * * *

■ 40. Amend § 425.704, effective January 1, 2016, by:

■ A. Revising the section heading.

■ B. In the introductory text, by removing the phrase ''claims data for preliminary prospectively assigned beneficiaries'' and adding in its place the phrase ''claims data for preliminarily prospectively and prospectively assigned beneficiaries''.

■ C. In the introductory text, by removing the phrase ''upon whom assignment is based during the agreement period'' and adding in its place the phrase ''that submits claims for primary care services used to determine the ACO's assigned population under subpart E of this part during the performance year''.

■ D. In paragraph (a) by removing the phrase ''ACOs may request data as often'' and adding in its place ''ACOs may access requested data as often''.
■ E. Revising paragraph (d)(1).
■ F. In paragraph (d)(2) by removing the phrase ''has been notified in writing how the ACO intends to use'' and adding in its place the phrase ''has been notified in compliance with § 425.708 that the ACO has requested access to''.

The revisions read as follows:

§ 425.704 Beneficiary-identifiable claims data.

* * * * *

(d) * * *

(1) For an ACO participating—

(i) In Track 1 or 2, the beneficiary's name appears on the preliminary prospective assignment list provided to the ACO at the beginning of the performance year, during each quarter (and in conjunction with the annual reconciliation) or the beneficiary has received a primary care service from an ACO participant upon whom assignment is based (under subpart E of this part) during the most recent 12-month period.

(ii) In Track 3, the beneficiary's name appears on the prospective assignment list provided to the ACO at the beginning of the performance year.

* * * * *

■ 41. Amend § 425.708, effective November 1, 2015, by:
■ A. Revising the section heading and paragraph (a).
■ B. Removing paragraphs (b) and (c).
■ C. Redesignating paragraphs (d) through (f) as paragraphs (b) through (d), respectively.
■ D. Revising newly redesignated paragraphs (b) and (c).
■ The revisions read as follows:

§ 425.708 Beneficiaries may decline claims data sharing.

(a) Beneficiaries must receive notification about the Shared Savings Program and the opportunity to decline claims data sharing and instructions on how to inform CMS directly of their preference.

(1) FFS beneficiaries are notified about the opportunity to decline claims data sharing through CMS materials such as the Medicare & You Handbook and through the notifications required under § 425.312.

(2) The notifications provided under § 425.312 must state that the ACO may have requested beneficiary identifiable claims data about the beneficiary for purposes of its care coordination and quality improvement work, and inform the beneficiary how to decline having his or her claims information shared with the ACO in the form and manner specified by CMS.

(3) Beneficiary requests to decline claims data sharing will remain in effect unless and until a beneficiary subsequently contacts CMS to amend that request to permit claims data sharing with ACOs.

(b) The opportunity to decline having claims data shared with an ACO under paragraph (a) of this section does not apply to the information that CMS provides to ACOs under § 425.702(c).

(c) In accordance with 42 U.S.C. 290dd–2 and the implementing regulations at 42 CFR part 2, CMS does not share beneficiary identifiable claims data relating to the diagnosis and treatment of alcohol and substance abuse without the explicit written consent of the beneficiary.

* * * * *

■ 42. Amend § 425.802 by revising paragraph (a)(2) to read as follows:

§ 425.802 Request for review.

(a) * * *

(2) The reconsideration review must be held on the record (review of submitted documentation).

* * * * *

■ 43. Amend § 425.804 by:
■ A. Revising paragraph (a)(3).
■ B. Removing paragraph (d).
■ C. Redesignating paragraphs (e) and (f) as paragraphs (d) and (e), respectively.

The revision reads as follows:

§ 425.804 Reconsideration review process.

(a) * * *

(3) A briefing schedule that permits each party to submit only one written brief, including any evidence, for consideration by the reconsideration official in support of the party's position. The submission of any additional briefs or supplemental evidence will be at the sole discretion of the reconsideration official.

* * * * *

Dated: May 19, 2015.

Andrew M. Slavitt,

Acting Administrator, Centers for Medicare & Medicaid Services.

Dated: May 21, 2015.

Sylvia M. Burwell,

Secretary, Department of Health and Human Services.

[FR Doc. 2015–14005 Filed 6–4–15; 4:15 pm]

BILLING CODE 4120–01–P

FEDERAL REGISTER

Vol. 80 Tuesday,

No. 110 June 9, 2015

Part IV

The President

Memorandum of May 7, 2015—Delegation of Authority Pursuant to Section 302(b) of the Sean and David Goldman International Child Abduction Prevention and Return Act of 2014

Presidential Determination No. 2015–06 of May 19, 2015—Presidential Determination Pursuant to Section 1245(d)(4)(B) and (C) of the National Defense Authorization Act for Fiscal Year 2012

Presidential Determination No. 2015–07 of June 3, 2015—Suspension of Limitations Under the Jerusalem Embassy Act

Federal Register
Vol. 80, No. 110
Tuesday, June 9, 2015

Presidential Documents

Title 3—

The President

Memorandum of May 7, 2015

Delegation of Authority Pursuant to Section 302(b) of the Sean and David Goldman International Child Abduction Prevention and Return Act of 2014

Memorandum for the Secretary of State

By the authority vested in me as President by the Constitution and the laws of the United States of America, including section 301 of title 3, United States Code, I hereby delegate the functions and authorities vested in the President by section 302(b) of the Sean and David Goldman International Child Abduction Prevention and Return Act of 2014 (Public Law 113–150) (the ''Act''), to the Secretary of State.

Any reference in this memorandum to the Act shall be deemed to be a reference to any future act that is the same or substantially the same as such provision.

You are authorized and directed to publish this memorandum in the *Federal Register.*

THE WHITE HOUSE,
Washington, May 7, 2015

[FR Doc. 2015–14249
Filed 6–8–15; 11:15 am]
Billing code 4710–10

Presidential Documents

Presidential Determination No. 2015–06 of May 19, 2015

Presidential Determination Pursuant to Section 1245(d)(4)(B) and (C) of the National Defense Authorization Act for Fiscal Year 2012

Memorandum for the Secretary of State[,] the Secretary of the Treasury[, and] the Secretary of Energy

By the authority vested in me as President by the Constitution and the laws of the United States, after carefully considering the report submitted to the Congress by the Energy Information Administration on April 30, 2015, and other relevant factors, including global economic conditions, increased oil production by certain countries, and the level of spare capacity, I determine, pursuant to section 1245(d)(4)(B) and (C) of the National Defense Authorization Act for Fiscal Year 2012, Public Law 112–81, and consistent with my prior determinations, that there is a sufficient supply of petroleum and petroleum products from countries other than Iran to permit a significant reduction in the volume of petroleum and petroleum products purchased from Iran by or through foreign financial institutions.

I will continue to monitor this situation closely.

The Secretary of State is hereby authorized and directed to publish this memorandum in the *Federal Register.*

THE WHITE HOUSE,
Washington, May 19, 2015

[FR Doc. 2015–14250
Filed 6–8–15; 11:15 am]
Billing code 4710–10

Presidential Documents

Presidential Determination No. 2015–07 of June 3, 2015

Suspension of Limitations Under the Jerusalem Embassy Act

Memorandum for the Secretary of State

Pursuant to the authority vested in me as President by the Constitution and the laws of the United States, including section 7(a) of the Jerusalem Embassy Act of 1995 (Public Law 104–45) (the ''Act''), I hereby determine that it is necessary, in order to protect the national security interests of the United States, to suspend for a period of 6 months the limitations set forth in sections 3(b) and 7(b) of the Act.

You are authorized and directed to transmit this determination to the Congress, accompanied by a report in accordance with section 7(a) of the Act, and to publish this determination in the *Federal Register.*

This suspension shall take effect after the transmission of this determination and report to the Congress.

THE WHITE HOUSE,
Washington, June 3, 2015

[FR Doc. 2015–14251
Filed 6–8–15; 11:15 am]
Billing code 4710–10

Reader Aids

Federal Register

Vol. 80, No. 110

Tuesday, June 9, 2015

CUSTOMER SERVICE AND INFORMATION

Federal Register/Code of Federal Regulations	
General Information, indexes and other finding aids	**202–741–6000**
Laws	**741–6000**
Presidential Documents	
Executive orders and proclamations	**741–6000**
The United States Government Manual	**741–6000**
Other Services	
Electronic and on-line services (voice)	**741–6020**
Privacy Act Compilation	**741–6064**
Public Laws Update Service (numbers, dates, etc.)	**741–6043**
TTY for the deaf-and-hard-of-hearing	**741–6086**

ELECTRONIC RESEARCH

World Wide Web

Full text of the daily Federal Register, CFR and other publications is located at: **www.fdsys.gov.**

Federal Register information and research tools, including Public Inspection List, indexes, and Code of Federal Regulations are located at: **www.ofr.gov.**

E-mail

FEDREGTOC-L (Federal Register Table of Contents LISTSERV) is an open e-mail service that provides subscribers with a digital form of the Federal Register Table of Contents. The digital form of the Federal Register Table of Contents includes HTML and PDF links to the full text of each document.

To join or leave, go to **http://listserv.access.gpo.gov** and select *Online mailing list archives, FEDREGTOC-L, Join or leave the list (or change settings);* then follow the instructions.

PENS (Public Law Electronic Notification Service) is an e-mail service that notifies subscribers of recently enacted laws.

To subscribe, go to **http://listserv.gsa.gov/archives/publaws-l.html** and select *Join or leave the list (or change settings);* then follow the instructions.

FEDREGTOC-L and **PENS** are mailing lists only. We cannot respond to specific inquiries.

Reference questions. Send questions and comments about the Federal Register system to: **fedreg.info@nara.gov**

The Federal Register staff cannot interpret specific documents or regulations.

CFR Checklist. Effective January 1, 2009, the CFR Checklist no longer appears in the Federal Register. This information can be found online at **http://bookstore.gpo.gov/.**

FEDERAL REGISTER PAGES AND DATE, JUNE

30919–31298 1
31299–31460 2
31461–31830 3
31831–31970 4
31971–32266 5
32267–32438 8
32439–32854 9

CFR PARTS AFFECTED DURING JUNE

At the end of each month the Office of the Federal Register publishes separately a List of CFR Sections Affected (LSA), which lists parts and sections affected by documents published since the revision date of each title.

2 CFR

600 31299

3 CFR

Proclamations:
9288 31821
9289 31823
9290 31825
9291 31827
9292 31829
Administrative Orders:
Memorandums:
Memorandum of May 7, 2015 32849
Presidential Determinations:
No. 2015–06 of May 19, 2015 32851
No. 2015–07 of June 3, 2015 32853

5 CFR

Ch. IV 32244
Proposed Rules:
531 30955
532 32042

7 CFR

633 32439
930 30919
3550 31971
Proposed Rules:
319 30959
925 32043
1211 ..... 32488, 32493

8 CFR

217 32267
1003 31461

10 CFR

72 30924
430 31971
Proposed Rules:
429 ..... 30962, 31324, 31487
430 ..... 30962, 31324, 31487, 31646

12 CFR

4 31463
5 31463
7 31463
14 31463
24 31463
32 31463
34 ..... 31463, 32658
100 31463
116 31463
143 31463
144 31463
145 31463
146 31463
150 31463
152 31463
159 31463
160 31463
161 31463
162 31463
163 31463
174 31463
192 31463
193 31463
208 32658
225 32658
323 32658
390 32658
600 32294
1026 32658
1222 32658
Proposed Rules:
Ch. I 32046
Ch. II 32046
Ch. III 32046

14 CFR

33 32440
39 ..... 30928, 32294, 32441, 32445, 32449, 32451, 32453, 32456, 32458, 32460, 32461
71 32464
95 31988
97 ..... 32297, 32299
400 31831
401 31831
Proposed Rules:
39 ..... 30963, 31325, 32055, 32058, 32061, 32063, 32066, 32069, 32072, 32315, 32316, 32508, 32510
71 32074

15 CFR

744 31834
902 32465
Proposed Rules:
734 31505
740 31505
750 31505
764 31505
772 31505

17 CFR

200 31836
230 31836
232 31836
239 31836
240 31836
249 31836
260 31836
Proposed Rules:
32 31326

20 CFR

404 31990
416 31990

21 CFR

73 ....31466, 32303
514 31708
558 31708
870 32307
876 30931
895 31299
Proposed Rules:
558 31520
1308 31521

22 CFR

135 31299
145 31299
Proposed Rules:
120 31525
123 31525
125 31525
127 31525

23 CFR

Proposed Rules:
625 31327

24 CFR

Proposed Rules:
91 31538
576 31538
888 31332

25 CFR

502 31991
513 31991
514 31991
516 31991
522 31991
531 31991
533 31991
535 31991
556 31991
559 31991
571 31991
573 31991
575 31991
580 31991

26 CFR

1 ....31837, 31995, 31996

28 CFR

0 31998
552 32000

30 CFR

Proposed Rules:
250 31560

31 CFR

Proposed Rules:
1 31336

32 CFR

706 32002

33 CFR

100 32466
117 ....30934, 31300, 31466, 31467, 32312, 32467
165 ....30934, 30935, 30936, 31300, 31467, 31843, 32312, 32313, 32467, 32468
Proposed Rules:
100 32512
105 32512
165 ....32318, 32321

34 CFR

Subtitle A 32210

38 CFR

Proposed Rules:
4 32513

39 CFR

601 31844
955 31303

40 CFR

9 32003
52 ....30939, 30941, 31305, 31844, 32017, 32019, 32026, 32469, 32472, 32474
62 32474
63 31470
81 32474
180 ....31481, 32029, 32034
721 32003
Proposed Rules:
52 ....30965, 30974, 30984, 31338, 31867, 32078, 32324, 32522
80 31870
97 30988
271 31338
435 31342
745 31871

41 CFR

51–6 32038

42 CFR

413 31485
425 32692
Proposed Rules:
88 32333
431 31098
433 31098
438 31098
440 31098
457 31098
495 31098

43 CFR

Proposed Rules:
3100 31560

44 CFR

64 31847
Proposed Rules:
67 ....32334, 32335, 32336, 32337

45 CFR

170 32477

48 CFR

225 31309
Proposed Rules:
2 31561
5 31561
7 31561
8 31561
10 31561
12 31561
15 31561
16 31561
19 31561
52 31561

49 CFR

10 32039
1510 31850

50 CFR

218 31310
300 32313
622 ....30947, 32478
635 ....32040, 32478
648 ....31864, 32480
660 ....31486, 31858, 32465
665 31863
697 32487
Proposed Rules:
17 ....30990, 31875
218 31738
622 31880
648 ....31343, 31347
660 31884

LIST OF PUBLIC LAWS

Note: No public bills which have become law were received by the Office of the Federal Register for inclusion in today's **List of Public Laws**.

Last List June 5, 2015

Public Laws Electronic Notification Service (PENS)

PENS is a free electronic mail notification service of newly enacted public laws. To subscribe, go to *http://listserv.gsa.gov/archives/publaws-l.html*

Note: This service is strictly for E-mail notification of new laws. The text of laws is not available through this service. **PENS** cannot respond to specific inquiries sent to this address.