AUTHENTICATED
U.S. GOVERNMENT
INFORMATION
GPO

FEDERAL REGISTER

Vol. 80 Tuesday,
No. 173 September 8, 2015

Pages 53691–54222

OFFICE OF THE FEDERAL REGISTER

The **FEDERAL REGISTER** (ISSN 0097–6326) is published daily, Monday through Friday, except official holidays, by the Office of the Federal Register, National Archives and Records Administration, Washington, DC 20408, under the Federal Register Act (44 U.S.C. Ch. 15) and the regulations of the Administrative Committee of the Federal Register (1 CFR Ch. I). The Superintendent of Documents, U.S. Government Publishing Office, Washington, DC 20402 is the exclusive distributor of the official edition. Periodicals postage is paid at Washington, DC.

The **FEDERAL REGISTER** provides a uniform system for making available to the public regulations and legal notices issued by Federal agencies. These include Presidential proclamations and Executive Orders, Federal agency documents having general applicability and legal effect, documents required to be published by act of Congress, and other Federal agency documents of public interest.

Documents are on file for public inspection in the Office of the Federal Register the day before they are published, unless the issuing agency requests earlier filing. For a list of documents currently on file for public inspection, see *www.ofr.gov.*

The seal of the National Archives and Records Administration authenticates the Federal Register as the official serial publication established under the Federal Register Act. Under 44 U.S.C. 1507, the contents of the **Federal Register** shall be judicially noticed.

The **Federal Register** is published in paper and on 24x microfiche. It is also available online at no charge at *www.fdsys.gov*, a service of the U.S. Government Publishing Office.

The online edition of the **Federal Register** is issued under the authority of the Administrative Committee of the Federal Register as the official legal equivalent of the paper and microfiche editions (44 U.S.C. 4101 and 1 CFR 5.10). It is updated by 6:00 a.m. each day the **Federal Register** is published and includes both text and graphics from Volume 59, 1 (January 2, 1994) forward. For more information, contact the GPO Customer Contact Center, U.S. Government Publishing Office. Phone 202-512-1800 or 866-512-1800 (toll free). E-mail, *gpocusthelp.com.*

The annual subscription price for the **Federal Register** paper edition is $749 plus postage, or $808, plus postage, for a combined **Federal Register, Federal Register** Index and List of CFR Sections Affected (LSA) subscription; the microfiche edition of the **Federal Register** including the **Federal Register** Index and LSA is $165, plus postage. Six month subscriptions are available for one-half the annual rate. The prevailing postal rates will be applied to orders according to the delivery method requested. The price of a single copy of the daily **Federal Register,** including postage, is based on the number of pages: $11 for an issue containing less than 200 pages; $22 for an issue containing 200 to 400 pages; and $33 for an issue containing more than 400 pages. Single issues of the microfiche edition may be purchased for $3 per copy, including postage. Remit check or money order, made payable to the Superintendent of Documents, or charge to your GPO Deposit Account, VISA, MasterCard, American Express, or Discover. Mail to: U.S. Government Publishing Office—New Orders, P.O. Box 979050, St. Louis, MO 63197-9000; or call toll free 1-866-512-1800, DC area 202-512-1800; or go to the U.S. Government Online Bookstore site, see *bookstore.gpo.gov.*

There are no restrictions on the republication of material appearing in the **Federal Register.**

How To Cite This Publication: Use the volume number and the page number. Example: 80 FR 12345.

Postmaster: Send address changes to the Superintendent of Documents, Federal Register, U.S. Government Publishing Office, Washington, DC 20402, along with the entire mailing label from the last issue received.

SUBSCRIPTIONS AND COPIES

PUBLIC

Subscriptions:

Paper or fiche	**202–512–1800**
Assistance with public subscriptions	**202–512–1806**
General online information	**202–512–1530; 1–888–293–6498**

Single copies/back copies:

Paper or fiche	**202–512–1800**
Assistance with public single copies	**1–866–512–1800 (Toll-Free)**

FEDERAL AGENCIES

Subscriptions:

Assistance with Federal agency subscriptions:

Email	*FRSubscriptions@nara.gov*
Phone	**202–741–6000**

Printed on recycled paper.

Contents

Federal Register

Vol. 80, No. 173

Tuesday, September 8, 2015

Agency for International Development
PROPOSED RULES
Federal Policy for the Protection of Human Subjects, 53933–54061

Agricultural Marketing Service
NOTICES
Meetings:
National Organic Standards Board, 53759

Agriculture Department
See Agricultural Marketing Service
See Forest Service
See Rural Business-Cooperative Service
PROPOSED RULES
Federal Policy for the Protection of Human Subjects, 53933–54061
NOTICES
Climate Change, Global Food Security, and the U.S. Food System Assessment Report; Public Comment Period, 53764
Privacy Act; Systems of Records, 53759–53764

Centers for Disease Control and Prevention
NOTICES
Agency Information Collection Activities; Proposals, Submissions, and Approvals, 53797–53802
Statement of Organization, Functions, and Delegations of Authority; Corrections, 53799
Vapor Containment Performance Protocol for Closed System Transfer Devices Used during Pharmacy Compounding and Administration of Hazardous Drugs, 53802–53803

Centers for Medicare & Medicaid Services
NOTICES
Agency Information Collection Activities; Proposals, Submissions, and Approvals, 53803

Children and Families Administration
NOTICES
Agency Information Collection Activities; Proposals, Submissions, and Approvals, 53804–53807

Civil Rights Commission
NOTICES
Meetings; Sunshine Act, 53773

Coast Guard
PROPOSED RULES
Safety Zones:
Jacksonville Sea and Sky Spectacular, Atlantic Ocean; Jacksonville Beach, FL, 53754–53756

Commerce Department
See International Trade Administration
See National Institute of Standards and Technology
See National Oceanic and Atmospheric Administration
PROPOSED RULES
Federal Policy for the Protection of Human Subjects, 53933–54061

Defense Department
RULES
Federal Acquisition Regulations:
Inflation Adjustment of Acquisition-Related Thresholds; Correction, 53753
PROPOSED RULES
Federal Policy for the Protection of Human Subjects, 53933–54061
NOTICES
Defense Personal Property Program, 53786–53787
Meetings:
Uniform Formulary Beneficiary Advisory Panel, 53787

Education Department
PROPOSED RULES
Federal Policy for the Protection of Human Subjects, 53933–54061
NOTICES
Meetings:
President's Board of Advisors on Historically Black Colleges and Universities, 53787–53789

Energy Department
See Energy Efficiency and Renewable Energy Office
See Federal Energy Regulatory Commission
PROPOSED RULES
Federal Policy for the Protection of Human Subjects, 53933–54061
NOTICES
Meetings:
Environmental Management Advisory Board, 53789

Energy Efficiency and Renewable Energy Office
NOTICES
Agency Information Collection Activities; Proposals, Submissions, and Approvals, 53789–53790

Environmental Protection Agency
RULES
Air Quality State Implementation Plans; Approvals and Promulgations:
California; Feather River Air Quality Management District; Correction, 53739
Approval and Promulgation of State Implementation Plans:
Alaska; Transportation Conformity State Implementation Plan, 53735–53739
PROPOSED RULES
Air Quality State Implementation Plans; Approvals and Promulgations:
Alaska; Transportation Conformity State Implementation Plan, 53757
Federal Policy for the Protection of Human Subjects, 53933–54061
Greenhouse Gas Emissions and Fuel Efficiency Standards for Medium- and Heavy-Duty Engines and Vehicles; Phase 2, 53756–53757
Revisions to Test Methods, Performance Specifications, and Testing Regulations for Air Emission Sources, 54146–54169
NOTICES
Cross-Media Electronic Reporting:
Authorized Program Revision Approval, Alabama, 53793–53794

Authorized Program Revision Approval, Mississippi, 53794

Federal Aviation Administration
RULES
Standard Instrument Approach Procedures, and Takeoff Minimums and Obstacle Departure Procedures, 53694–53704

Federal Communications Commission
RULES
Reorganization of the Enforcement Bureau's Field Operations, 53747–53753
PROPOSED RULES
Petitions for Reconsideration of Action in Rulemaking Proceeding, 53757

Federal Deposit Insurance Corporation
NOTICES
Termination of Receivership:
American National Bank, Parma, OH, 53796
Bank of Florida—Tampa Bay, Tampa, FL, 53796
Chipola Community Bank, Marianna, FL, 53795
First National Bank of Anthony, Anthony, KS, 53795
NorhWest Bank and Trust, Acworth, GA, 53796
Paramount Bank, Farmington Hills, MI, 53795
Southern Community Bank, Fayetteville, GA, 53794–53795
Westside Community Bank, University Place, WA, 53795

Federal Energy Regulatory Commission
NOTICES
Applications:
Colorado Interstate Gas Co., LLC, Wyoming Interstate Co., LLC, 53792–53793
Pacific Gas and Electric Co, 53791–53792
Combined Filings, 53790, 53793
Initial Market-Based Rate Filings Including Requests for Blanket Section 204 Authorizations:
Midwest Electric Power, Inc., 53790–53791
Staff Attendances, 53792

Federal Reserve System
NOTICES
Changes in Bank Control:
Acquisitions of Shares of a Bank or Bank Holding Company, 53796
Formations of, Acquisitions by, and Mergers of Bank Holding Companies, 53797

Food and Drug Administration
NOTICES
Agency Information Collection Activities; Proposals, Submissions, and Approvals:
Environmental Impact Considerations, 53807–53810
Guidance:
Demonstrating the Substantial Equivalence of a New Tobacco Product — Responses to Frequently Asked Questions; Second Edition, 53810–53811

Forest Service
NOTICES
Meetings:
Rogue and Umpqua Resource Advisory Committee, 53764–53765

General Services Administration
RULES
Federal Acquisition Regulations:
Inflation Adjustment of Acquisition-Related Thresholds; Correction, 53753

Health and Human Services Department
See Centers for Disease Control and Prevention
See Centers for Medicare & Medicaid Services
See Children and Families Administration
See Food and Drug Administration
See Health Resources and Services Administration
See Indian Health Service
See National Institutes of Health
RULES
National Institute on Minority Health and Health Disparities Research Endowments, 53739–53747
PROPOSED RULES
Federal Policy for the Protection of Human Subjects, 53933–54061
Nondiscrimination in Health Programs and Activities, 54172–54221

Health Resources and Services Administration
NOTICES
Agency Information Collection Activities; Proposals, Submissions, and Approvals, 53811–53812

Homeland Security Department
See Coast Guard
PROPOSED RULES
Federal Policy for the Protection of Human Subjects, 53933–54061

Housing and Urban Development Department
RULES
On-Site Completion of Construction of Manufactured Homes, 53712–53732
Streamlining Administrative Regulations for Public Housing; Revisions to Public Housing Flat Rents, 53709–53712
NOTICES
Fair Market Rents for the Housing Choice Voucher Program:
Moderate Rehabilitation Single Room Occupancy Program and Other Programs Fiscal Year 2016, 53817–53886

Indian Health Service
NOTICES
Agency Information Collection Activities; Proposals, Submissions, and Approvals:
Addendum to Declaration for Federal Employment, Child Care and Indian Child Care Worker Positions, 53812–53813

Interior Department
See National Park Service
See Surface Mining Reclamation and Enforcement Office

Internal Revenue Service
RULES
Integrated Hedging Transactions of Qualifying Debt, 53732–53735
NOTICES
Agency Information Collection Activities; Proposals, Submissions, and Approvals, 53919, 53922–53923
Meetings:
Taxpayer Advocacy Panel Joint Committee, 53918

Taxpayer Advocacy Panel Notices and Correspondence Project Committee, 53921
Taxpayer Advocacy Panel Special Projects Committee, 53921–53922
Taxpayer Advocacy Panel Tax Forms and Publications Project Committee, 53919
Taxpayer Advocacy Panel Taxpayer Assistance Center Improvements Project Committee, 53923
Taxpayer Advocacy Panel Taxpayer Communications Project Committee, 53922
Taxpayer Advocacy Panel Toll-Free Phone Line Project Committee, 53919–53920
Members of Senior Executive Service Performance Review Boards, 53920–53921
Privacy Act; Systems of Records, 54064–54143

International Trade Administration
NOTICES
Aerospace Executive Service Trade Mission at Singapore Airshow, 53773–53775

International Trade Commission
NOTICES
Investigations; Determinations, Modifications, and Rulings, etc.:
Certain Audio Processing Hardware and Software Products Containing Same, 53887–53888
Certain Toner Supply Containers and Components Thereof, 53889
Chloropicrin from China, 53888
Crepe Paper from China, 53888

Justice Department
PROPOSED RULES
Federal Policy for the Protection of Human Subjects, 53933–54061
NOTICES
Agency Information Collection Activities; Proposals, Submissions, and Approvals:
Acquisition 360 Survey, 53891
Request for Recognition of a Non-profit Religious, Charitable, Social Service, or Similar Organization, 53889–53890
Proposed Consent Decrees under CERCLA, 53890
Proposed Consent Decrees under the Clean Air Act, Clean Water Act, Resource Conservation and Recovery Act, etc., 53890–53891

Labor Department
PROPOSED RULES
Federal Policy for the Protection of Human Subjects, 53933–54061

National Aeronautics and Space Administration
RULES
Federal Acquisition Regulations:
Inflation Adjustment of Acquisition-Related Thresholds; Correction, 53753
PROPOSED RULES
Federal Policy for the Protection of Human Subjects, 53933–54061
NOTICES
Agency Information Collection Activities; Proposals, Submissions, and Approvals, 53891–53892

National Highway Traffic Safety Administration
PROPOSED RULES
Greenhouse Gas Emissions and Fuel Efficiency Standards for Medium- and Heavy-Duty Engines and Vehicles; Phase 2, 53756–53757
NOTICES
Inconsequential Noncompliance; Petitions:
Baby Jogger, LLC, 53914–53915
Maserati S.p.A and Maserati North America, Inc., 53912–53913
Mitsubishi Motors North America, Inc., 53911–53912

National Institute of Standards and Technology
NOTICES
Meetings:
Manufacturing Extension Partnership Advisory Board, 53775

National Institutes of Health
NOTICES
Meetings:
Center for Scientific Review, 53814–53815
Eunice Kennedy Shriver National Institute of Child Health and Human Development, 53813–53816
National Center for Complementary and Integrative Health, 53814
National Institute of Biomedical Imaging and Bioengineering, 53817
National Institute of Diabetes and Digestive and Kidney Diseases, 53816–53817

National Oceanic and Atmospheric Administration
NOTICES
Meetings:
Fisheries of the Gulf of Mexico — Southeast Data, Assessment, and Review, 53776–53777
Pacific Islands Fisheries, 53775–53776
Western Pacific Management Council, 53776
Takes of Marine Mammals Incidental to Specified Activities:
Rehabilitation of Jetty A at the Mouth of the Columbia River, 53777–53786

National Park Service
NOTICES
Environmental Impact Statements; Availability, etc.:
Breach Management Plan, Fire Island National Seashore, NY, 53886–53887
Meetings:
Subsistence Resource Commission for the Cape Krusenstern National Monument; Amendments, 53886

National Science Foundation
PROPOSED RULES
Federal Policy for the Protection of Human Subjects, 53933–54061

Nuclear Regulatory Commission
RULES
List of Approved Spent Fuel Storage Casks:
Holtec International HI–STORM UMAX Canister Storage System, Certificate of Compliance No. 1040, Amendment No. 1, 53691–53694
NOTICES
Applications and Amendments Involving Proposed No Significant Hazards Considerations, etc., 53897–53902

License Amendment Applications:
Entergy Operations, Inc., Waterford Steam Electric Station, Unit 3, 53892–53896
Meetings:
Advisory Committee on the Medical Uses of Isotopes, 53896–53897
Meetings; Sunshine Act, 53902
Standard Review Plans:
Quality Assurance Program Description—Design Certification, Early Site Permit and New License Applicants, 53902–53903

Postal Regulatory Commission
NOTICES
New Postal Products, 53903–53904

Rural Business-Cooperative Service
NOTICES
Grant Applications:
Delta Health Care Services, 53765–53773

Securities and Exchange Commission
NOTICES
Limited Exemption Orders:
Greenbacker Renewable Energy Co., LLC, 53905–53906
Meetings:
Advisory Committee on Small and Emerging Companies, 53904–53905
Self-Regulatory Organizations; Proposed Rule Changes:
ISE Gemini, LLC, 53906–53911
NYSE Arca, Inc., 53905, 53911

Social Security Administration
PROPOSED RULES
Federal Policy for the Protection of Human Subjects, 53933–54061

State Department
RULES
Schedule of Fees for Consular Services:
Department of State and Overseas Embassies and Consulates; Passport and Citizenship Services Fee Changes, 53704–53709

Surface Mining Reclamation and Enforcement Office
NOTICES
Agency Information Collection Activities; Proposals, Submissions, and Approvals, 53887

Surface Transportation Board
PROPOSED RULES
Amtrak Emergency Routing Orders, 53758
NOTICES
Agency Information Collection Activities; Proposals, Submissions, and Approvals:
Statutory Authority to Preserve Rail Service, 53917–53918
Statutory Licensing and Consolidation Authority, 53915–53917
Construction and Operation Exemptions:
Six County Association of Governments, Rail Line between Levan and Salina, UT, 53915

Transportation Department
See Federal Aviation Administration
See National Highway Traffic Safety Administration
See Surface Transportation Board
PROPOSED RULES
Federal Policy for the Protection of Human Subjects, 53933–54061

Treasury Department
See Internal Revenue Service

Veterans Affairs Department
PROPOSED RULES
Federal Policy for the Protection of Human Subjects, 53933–54061
NOTICES
Fund Availability:
Grants for Transportation of Veterans in Highly Rural Areas, 53923–53928
Requests for Nominations:
Research Advisory Committee on Gulf War Veterans' Illnesses, 53928–53929

Separate Parts In This Issue

Part II
Agency for International Development, 53933–54061
Agriculture Department, 53933–54061
Commerce Department, 53933–54061
Defense Department, 53933–54061
Education Department, 53933–54061
Energy Department, 53933–54061
Environmental Protection Agency, 53933–54061
Health and Human Services Department, 53933–54061
Homeland Security Department, 53933–54061
Justice Department, 53933–54061
Labor Department, 53933–54061
National Aeronautics and Space Administration, 53933–54061
National Science Foundation, 53933–54061
Social Security Administration, 53933–54061
Transportation Department, 53933–54061
Veterans Affairs Department, 53933–54061

Part III
Treasury Department, Internal Revenue Service, 54064–54143

Part IV
Environmental Protection Agency, 54146–54169

Part V
Health and Human Services Department, 54172–54221

Reader Aids

Consult the Reader Aids section at the end of this issue for phone numbers, online resources, finding aids, and notice of recently enacted public laws.

To subscribe to the Federal Register Table of Contents LISTSERV electronic mailing list, go to http://listserv.access.gpo.gov and select Online mailing list archives, FEDREGTOC-L, Join or leave the list (or change settings); then follow the instructions.

CFR PARTS AFFECTED IN THIS ISSUE

A cumulative list of the parts affected this month can be found in the Reader Aids section at the end of this issue.

6 CFR
Proposed Rules:
46 53933

7 CFR
Proposed Rules:
1c 53933

10 CFR
72 53691
Proposed Rules:
745 54172

14 CFR
97 (4 documents) 53694, 53696, 53700, 53702
Proposed Rules:
1230 53933

15 CFR
Proposed Rules:
27 53933

20 CFR
Proposed Rules:
431 53933

22 CFR
22 53704
Proposed Rules:
225 53933

24 CFR
960 53709
3280 53712
3282 53712
3285 53712

26 CFR
1 53732

28 CFR
Proposed Rules:
46 53933

29 CFR
Proposed Rules:
21 53933

32 CFR
Proposed Rules:
219 53933

33 CFR
Proposed Rules:
165 53754

34 CFR
Proposed Rules:
97 53933

38 CFR
Proposed Rules:
16 53933

40 CFR
52 (2 documents) 53735, 53739
Proposed Rules:
9 53756
22 53756
26 53933
51 54146
52 53757
60 54146
61 54146
63 54146
85 53756
86 53756
600 53756
1033 53756
1036 53756
1037 53756
1039 53756
1042 53756
1065 53756
1066 53756
1068 53756

42 CFR
52i 53739

45 CFR
Proposed Rules:
46 53933
92 54172
690 53933

47 CFR
0 53747
2 53747
11 53747
15 53747
18 53747
73 53747
74 53747
76 53747
78 53747
80 53747
90 53747
95 53747
97 53747
Proposed Rules:
54 53757

48 CFR
1 53753
2 53753
3 53753
4 53753
6 53753
7 53753
8 53753
9 53753
10 53753
12 53753
13 53753
15 53753
16 53753
17 53753
19 53753
22 53753
25 53753
28 53753
30 53753
42 53753
50 53753
52 53753
53 53753

49 CFR
Proposed Rules:
11 53933
512 53756
523 53756
534 53756
535 53756
537 53756
583 53756
1011 53758
1034 53758
1102 53758
1104 53758
1115 53758

Rules and Regulations

Federal Register

Vol. 80, No. 173

Tuesday, September 8, 2015

This section of the FEDERAL REGISTER contains regulatory documents having general applicability and legal effect, most of which are keyed to and codified in the Code of Federal Regulations, which is published under 50 titles pursuant to 44 U.S.C. 1510.

The Code of Federal Regulations is sold by the Superintendent of Documents. Prices of new books are listed in the first FEDERAL REGISTER issue of each week.

NUCLEAR REGULATORY COMMISSION

10 CFR Part 72

[NRC–2015–0067]

RIN 3150–AJ58

List of Approved Spent Fuel Storage Casks: Holtec International HI–STORM UMAX Canister Storage System, Certificate of Compliance No. 1040, Amendment No. 1

AGENCY: Nuclear Regulatory Commission.

ACTION: Direct final rule; confirmation of effective date.

SUMMARY: The U.S. Nuclear Regulatory Commission (NRC) is confirming the effective date of September 8, 2015, for the direct final rule that was published in the **Federal Register** on June 23, 2015. This direct final rule amended the NRC's spent fuel storage regulations by revising the Holtec International, Inc. (Holtec), HI–STORM (Holtec International Storage Module) Underground Maximum Capacity (UMAX) Canister Storage System listing within the ''List of approved spent fuel storage casks'' to add Amendment No. 1 to Certificate of Compliance (CoC) No. 1040. Amendment No. 1 provides a seismically enhanced version of the HI–STORM UMAX Canister Storage System, identified as the ''Most Severe Earthquake (MSE)'' version that could be used in areas with higher seismic demands than those analyzed previously. Amendment No. 1 also includes minor physical design changes to help ensure structural integrity of the amended system. These are the addition of a hold-down system to the closure lid; replacing the fill material in the interstitial spaces between the cavity enclosure containers (CECs) surrounding the casks with 3000 psi concrete; strengthening the multi-purpose canister (MPC) guides, and engineering the guides' nominal gap with the MPC to be tighter than the original HI–STORM UMAX Canister Storage System design.

DATES: *Effective date:* The effective date of September 8, 2015, for the direct final rule published June 23, 2015 (80 FR 35829), is confirmed.

ADDRESSES: Please refer to Docket ID NRC–2015–0067 when contacting the NRC about the availability of information for this action. You may obtain publicly-available information related to this action by any of the following methods:

- *Federal Rulemaking Web site:* Go to *http://www.regulations.gov* and search for Docket ID NRC–2015–0067. Address questions about NRC dockets to Carol Gallagher; telephone: 301–415–3463; email: *Carol.Gallagher@nrc.gov.* For technical questions, contact the individual listed in the **FOR FURTHER INFORMATION CONTACT** section of this document.
- *NRC's Agencywide Documents Access and Management System (ADAMS):* You may obtain publicly-available documents online in the ADAMS Public Documents collection at *http://www.nrc.gov/reading-rm/adams.html.* To begin the search, select ''ADAMS Public Documents'' and then select *''Begin Web-based ADAMS Search.''* For problems with ADAMS, please contact the NRC's Public Document Room (PDR) reference staff at 1–800–397–4209, 301–415–4737, or by email to *pdr.resource@nrc.gov.*
- *NRC's PDR:* You may examine and purchase copies of public documents at the NRC's PDR, Room O–1F21, One White Flint North, 11555 Rockville Pike, Rockville, Maryland 20852.

FOR FURTHER INFORMATION CONTACT: Solomon Sahle, Office of Nuclear Material Safety and Safeguards, U.S. Nuclear Regulatory Commission, Washington, DC 20555–0001; telephone: 301–415–3781; email: *Solomon.Sahle@nrc.gov.*

SUPPLEMENTARY INFORMATION:

I. Discussion

On June 23, 2015 (80 FR 35829), the NRC published a direct final rule amending its regulations in § 72.214 of Title 10 of the *Code of Federal Regulations* (10 CFR) by revising the Holtec HI–STORM UMAX Canister Storage System listing within the ''List of approved spent fuel storage casks'' to add Amendment No. 1 to CoC No. 1040. Amendment No. 1 provides a seismically enhanced version of the HI–STORM UMAX Canister Storage System, identified as the ''Most Severe Earthquake (MSE)'' version that could be used in areas with higher seismic demands than those analyzed previously. Amendment No. 1 also includes minor physical design changes to help ensure structural integrity of the amended system. These are the addition of a hold-down system to the closure lid; replacing the fill material in the interstitial spaces between the CECs surrounding the casks with 3000 psi concrete; strengthening the MPC guides, and engineering the guides' nominal gap with the MPC to be tighter than the original HI–STORM UMAX Canister Storage System design.

II. Public Comments on the Companion Proposed Rule

In the direct final rule, the NRC stated that if no significant adverse comments were received, the direct final rule would become effective on September 8, 2015. The NRC received 10 comment submittals on the companion proposed rule (80 FR 35872). Electronic copies of these comments can be obtained from the Federal Rulemaking Web site, *http://www.regulations.gov,* by searching for Docket ID NRC–2015–0067. The comments are also available in ADAMS under Accession Nos. ML15210A145, ML15210A150, ML15210A151, ML15210A155, ML15210A169, ML15210A164, ML15210A166, ML15210A177, ML15210A181, and ML15210A184. For the reasons discussed in more detail in Section III, ''Public Comment Analysis,'' of this document, none of the comments received are considered significant adverse comments as defined in NUREG/BR–0053, Revision 6, ''United States Nuclear Regulatory Commission Regulations Handbook'' (ADAMS Accession No. ML052720461).

III. Public Comment Analysis

The NRC received 10 comment submittals on the proposed rule, many raising multiple and overlapping issues. As explained in the June 23, 2015, direct final rule (80 FR 35829), the NRC would withdraw the direct final rule only if it received a ''significant adverse comment.'' This is a comment where the

commenter explains why the rule would be inappropriate, including challenges to the rule's underlying premise or approach, or would be ineffective or unacceptable without a change. A comment is adverse and significant if:

(1) The comment opposes the rule and provides a reason sufficient to require a substantive response in a notice-and-comment process. For example, a substantive response is required when:

(a) The comment causes the NRC staff to reevaluate (or reconsider) its position or conduct additional analysis;

(b) The comment raises an issue serious enough to warrant a substantive response to clarify or complete the record; or

(c) The comment raises a relevant issue that was not previously addressed or considered by the NRC staff.

(2) The comment proposes a change or an addition to the rule, and it is apparent that the rule would be ineffective or unacceptable without incorporation of the change or addition.

(3) The comment causes the NRC staff to make a change (other than editorial) to the rule, CoC, or Technical Specifications (TSs).

The NRC determined that none of the comments submitted on this direct final rule met any of these criteria. The comments either were already addressed by the NRC staff's safety evaluation report (SER) (ADAMS Accession No. ML15070A149), or were beyond the scope of this rulemaking. The NRC has not made any changes to the direct final rule as a result of the public comments. However, the NRC is taking this opportunity to respond to some of the comments in an effort to clarify information about the 10 CFR part 72 CoC rulemaking process.

For rulemakings amending or revising a CoC, the scope of the rulemaking is limited to the specific changes requested by the applicant in the request for the amendment or amendment revision. Therefore, comments about the system or spent fuel storage in general that are not applicable to the changes requested by the applicant are outside the scope of this rulemaking. Comments about details of the particular system that is the subject of the rulemaking, but that are not being addressed by the specific changes requested, have already been resolved in prior rulemakings. Persons who have questions or concerns about prior rulemakings and the resulting final rules may consider the NRC's process for petitions for rulemaking under 10 CFR 2.802. Additionally, safety concerns about any NRC-regulated activity may be reported to the NRC in accordance with the guidance posted on the NRC's Web site at *http://www.nrc.gov/about-nrc/regulatory/allegations/safety-concern.html.* This Web page provides information on how to notify the NRC of emergency or non-emergency issues.

The NRC identified the following issues raised in the comments, and the NRC's responses to these issues follow.

(1) Potential Supersonic Shear Earthquakes and Site Specific Seismic Standards

Several commenters raised concerns regarding the ability of this CoC system to withstand seismic events, particularly if the system were to be used at specific sites with known seismic activity, such as San Onofre Nuclear Generating Station (SONGS). These commenters stated that Holtec casks have not been tested for newly discovered potential Supersonic Shear Earthquakes, which might result in a rupture after Supersonic Shear Earthquake Events. According to the comments, cask venting can be blocked after a tsunami leading to cask failure.

NRC Response

These comments are outside the scope of this rulemaking because they are not specific to the amendment at issue in the rule, but instead raise concerns with the general 10 CFR part 72 requirements and process for certification of the CoC systems. This rule adds Amendment No. 1 to the HI–STORM UMAX Canister Storage System, CoC No. 1040. Applicants submitting CoC's for approval are required to document a design bases for their CoC or amendment CoC, which includes seismic parameters. Under 10 CFR 72.212(b)(6), general licensees (power reactors seeking to use those CoC systems at their specific sites) are required to conduct a review of the CoC's Final Safety Analysis Report (FSAR) and the related NRC SER prior to use of the general license to ensure that the reactor site parameters, including analyses of earthquake intensity, are enveloped by the cask design bases considered in these reports. This rulemaking makes no determination regarding the acceptability of this amended system for use at any specific site. Nor does this rule seek to change the existing generic nature of CoC approvals or the technical qualifications outlined for CoC approval, as currently envisioned in 10 CFR part 72. Commenters with concerns regarding the existing 10 CFR part 72 regulations for technical review and approval of CoC systems could consider filing a petition for rulemaking under 10 CFR 2.802.

(2) Wind Effect on Underground Cask Maximum Heat Load

Commenters stated that according to NUREG–2174 ''Impact of Variation in Environmental Conditions on the Thermal Performance of Dry Storage Casks'' (ADAMS Accession No. ML15054A207), low-speed wind conditions increased the peak cladding temperature on underground systems, and asked whether this was considered in the development of the heat load limits of the HI–STORM UMAX Canister Storage System.

NRC Response

The comment is outside the scope of this rulemaking because it is not specific to the amendment at issue in the rule. The NRC evaluated and approved the HI–STORM UMAX Canister Storage System heat loads in the initial CoC certification, and this is provided in its SER (ADAMS Accession No. ML15093A510). The Amendment No. 1 application requested no thermal changes that required NRC evaluation.

(3) MPC Seismic Evaluation

A commenter stated that the thin stainless steel MPC canisters are subject to pitting and corrosion (particularly from marine environments like chloride-induced stress corrosion cracking). According to the comment, since cracks may initiate during the initial licensing period in these canisters, cracking canisters should be included in the seismic analysis for MPC's stored while in the HI–STORM UMAX Canister Storage System since it would be of more concern in high risk seismic areas as proposed for this UMAX Amendment.

NRC Response

The comment is outside the scope of this rulemaking because it is not specific to the amendment at issue in the rule. The NRC has evaluated the design of the HI–STORM UMAX Canister Storage System and has determined that the design is robust, and contains a number of layers of acceptable confinement systems in compliance with 10 CFR part 72 requirements. Furthermore, the NRC has evaluated the susceptibility to and effects of stress corrosion cracking and other corrosion mechanisms on safety significant systems for spent nuclear fuel (SNF) dry cask storage (DCS) systems during an initial certification period. The NRC staff has determined that the HI–STORM UMAX Canister Storage System, when used within the requirements of the proposed CoC, will safely store SNF and prevent radiation releases and exposure consistent with

regulatory requirements, including seismic requirements. This evaluation is documented in the NRC staff's SERs (ADAMS Accession Nos. ML15070A149 and ML14202A031).

(4) Transfer Cask

Commenters ask if the transfer casks were approved for storage of an MPC in case of a failed MPC.

NRC Response

To the extent that this comment raises a concern with the availability of a transfer cask, it raises an issue that was addressed in the NRC's evaluation of this amendment and fails to cite any specific information that would alter the NRC's conclusions. In this case, the transfer cask utilized in the HI–STORM UMAX Canister Storage System is described in the HI–STORM Flood/Wind (F/W) Multipurpose Canister (MPC) Storage System FSAR (ADAMS Accession No. ML15177A336). The HI–STORM UMAX transfer cask is authorized to transfer intact MPC's in accordance with the CoC No. 1040 TSs.

(5) Failed Canister Remediation

A commenter asked if there is a plan to remediate a failed canister.

NRC Response

The comment is outside the scope of this rulemaking because it is not specific to the amendment at issue in the rule, but instead raises a concern with the general 10 CFR part 72 requirement and process for certification of the CoC systems. Implementing corrective actions in the event of a failed MPC is the responsibility of the general licensee and those corrective actions are not incorporated into CoC No. 1040.

(6) MPC Thickness

Commenters questioned the maximum MPC thickness allowed in this amendment, noting that although the FSAR indicated 0.5″ as the maximum thickness, Holtec has proposed using a thickness of 0.625 at San Onofre (SONGS). The commenters raised concerns regarding the implications of such a change outside of a license amendment where it could be properly evaluated to determine if the change in limiting parameters will affect seismic, thermal, weight, dimensions and other critical analyses.

NRC Response

The comment is outside the scope of this rulemaking because it is not specific to the amendment at issue in the rule, but instead raises concerns with the general 10 CFR part 72 requirements and process for certification of the CoC systems. The nominal MPC thickness for the canisters certified under CoC No. 1040, Amendment No. 1 is 0.5″. The NRC has no knowledge of a Holtec proposal to increase the thickness of an MPC to 0.625″. If presented with an amendment request to do so, the NRC will evaluate it in accordance with 10 CFR part 72 requirements.

(7) Definition of ''Long-term''

Commenters requested the NRC require a definition of ''long-term'' in the FSAR.

NRC Response

The comment is outside the scope of this rulemaking because it is not specific to the amendment at issue in the rule, but instead raises general concerns regarding terminology. The definitions required by the NRC to support the evaluation and approval of CoC No. 1040, Amendment No. 1, are provided in Appendix A of the CoC, Technical Specifications for the HI–STORM UMAX Canister Storage System. ''Long-term'' is a general descriptive term that is not required to support any regulatory or technical evaluation, and thus is not required to be more formally defined.

(8) Definition of Underground

Commenters requested the NRC define the term ''underground'' as used in this system. The comments raised concerns that a structure that is only partially underground, but covered on the side with an ''earthen berm,'' could still be considered ''underground'' for compliance with this CoC.

NRC Response

The comments regarding the need to define the term ''underground'' as used in the HI–STORM UMAX Canister Storage System are outside the scope of this rulemaking because they are not specific to the amendment at issue in the rule, but instead raise concerns with the general 10 CFR part 72 requirements and process for certification of CoC systems. In this instance, Holtec has provided and analyzed specific structure placement parameters, and the NRC has evaluated these parameters that bound the placement of such a system in the ground. Pursuant to the regulatory requirements in 10 CFR 72.212(b), any general licensee that seeks to use this system must determine that the design and construction of the system, structures, and components are bounded by the conditions of the CoC by analyzing the generic parameters provided and analyzed in the FSAR and SER to ensure that its site specific parameters are enveloped by the cask design bases established in these reports. The NRC is aware of the SONGS proposed configuration submitted to the California Coastal Commission and is closely monitoring this issue. The NRC will continue to ensure that the facility constructed at SONGS meets the requirements of the CoC and TS of the specific DCS system selected by Southern California Edison.

(9) Heat Load Charts

One commenter stated that the FSAR indicates that changes to storage cell kW heat loads were made and requested that the NRC determine if this was evaluated in the amendment request. The comment also requested clarification on the placement configuration of SNF assemblies in the MPC, as well as the rationale for the heat load configuration.

NRC Response

This comment is outside the scope of this rulemaking because it is not specific to the amendment at issue in the rule, but instead raises concerns with the general 10 CFR part 72 requirements and process for certification of CoC systems. The comment is addressing revision bars that are incorporated into the HI–STORM UMAX Canister Storage System FSAR, Revision 2 (ADAMS Accession No. ML14202A031). The tables referenced in the comment were revised due to changes made during the original HI–STORM UMAX Canister Storage System evaluation; 10 CFR 72.248(a)(1) requires that an updated FSAR reflecting any changes made during the NRC review process be submitted within 90 days after an approval of the cask design. The loading patterns were evaluated and approved by the NRC staff in its initial SER (ADAMS Accession No. ML15093A510). The Amendment No. 1 application required no further changes to these tables requiring NRC evaluation.

(10) MPC Inspection

A commenter requested that the NRC clarify that the MPC leak test inspection, that is used to verify the integrity of the confinement boundary, is performed before the MPC is loaded with fuel.

NRC Response

This comment is outside the scope of this rulemaking because it is not specific to the amendment at issue in the rule, but instead raises concerns with the general 10 CFR part 72 requirements and process for certification of CoC systems. The HI–

STORM F/W MPC Canister System FSAR clearly identifies the purpose of the MPC leak detection requirement as a post fabrication certification test that is only required to be performed one time.

(11) Assumption of No Fuel Cladding Degradation After Dry Storage Is Not Substantiated

Some commenters raised an issue with Holtec's claim that there is no credible mechanism for gross fuel cladding degradation of fuel classified as undamaged during storage in the HI–STORM UMAX Canister Storage System.

NRC Response

These comments are outside the scope of this rulemaking because they are not specific to the amendment at issue in the rule. Instead, these comments raise issues that would be addressed during any renewal application review. The NRC has determined that fuel cladding degradation is not an issue during the initial 20-year certification period, but instead, is an issue that would have to be addressed if a CoC holder requested renewal of the CoC for a period beyond the initial 20 years. If a renewal application is filed, NRC regulations require that the application include programs to manage the effects of aging, including necessary monitoring and inspection programs. Those programs would have to be reviewed and determined acceptable by the NRC before any CoC renewal is approved.

(12) Vertical Ventilated Module Needs Substantiation for Expected Lifespan

Commenters questioned Holtec's claims of a design life of 60 years, a service life of 100 years and a licensed life of 40 years. Since no substantiation was provided for these claims, the commenters requested the claims be removed from the FSAR.

NRC Response

This issue is outside of the scope of this rulemaking because the term of a certificate is determined in the original certification, not in amendments to that certification. This rulemaking seeks to add Amendment No. 1 to CoC No. 1040. In this case, the UMAX CoC was approved on March 6, 2015 (80 FR 12073), for an initial 20-year term. This 20-year term will also apply to Amendment No. 1. Use of this system beyond the expiration date of 20 years would require an evaluation of a renewal application for this CoC which would be addressed in a subsequent rulemaking process.

(13) Concrete Inspection and Inspection Limitations

Some commenters questioned whether the HI–STORM UMAX Canister Storage System design provided a safe and accessible method to perform inspections within the license period given that high seismic risk areas are more likely to cause cracking or other structural changes, and indicated that such an evaluation should be part of the NRC's review process.

NRC Response

This comment is outside the scope of this rulemaking because it is not specific to the amendment at issue in the rule, but instead raises concerns with the general 10 CFR part 72 requirements and process for certification of CoC systems. The NRC has determined that concrete degradation is not an issue requiring inspection during the initial 20-year certification period, but instead, is an issue that would have to be addressed if a CoC holder requested renewal of the CoC for a period beyond the initial 20 years. If a renewal application is filed, NRC regulations require that the application include programs to manage the effects of aging, including necessary monitoring and inspection programs. Those programs would have to be reviewed and determined acceptable by the NRC before any CoC renewal is approved.

(14) High Burnup Fuel

Commenters also raised questions regarding the long-term acceptability of the extended storage of high burnup fuel (HBF).

NRC Response

To the extent these comments raise issues about the storage of HBF in the CoC for the first 20 years, these comments are outside the scope of this rulemaking. The NRC has evaluated the acceptability of storage of HBF for the initial 20-year certification term for the HI–STORM UMAX Canister Storage System during its review of the initial certificate. As documented in the NRC staff's SER under Docket ID NRC–2014–0120, the NRC staff has determined that the use of the HI–STORM UMAX Canister Storage System, including storage of HBF, will be conducted in compliance with the applicable regulations of 10 CFR part 72, and the CoC should be approved for the initial 20-year term. This amendment does not impact the analysis conducted by the NRC staff during the initial certification of this system.

Additionally, to the extent these comments raise concerns regarding the storage of HBF beyond the initial term of 20 years, the comments are also outside the scope of this rulemaking. A request to store HBF beyond the initial 20 years provided in the certification of this system will require the applicant to submit a license renewal application with the inclusion of Aging Management Programs addressing HBF. In that regard, a demonstration project is being planned by the U.S. Department of Energy to provide confirmatory data on the performance of HBF in DCS. The NRC plans to evaluate the data obtained from the project to confirm the accuracy of current models that are relied upon for authorizing the storage of HBF for extended storage periods beyond the initial 20-year certification term.

The NRC staff has concluded that the comments received on the companion proposed rule for the Holtec HI–STORM UMAX Canister Storage System, CoC No. 1040, Amendment No. 1, are not significant adverse comments as defined in NUREG/BR–0053, Revision 6, ''United States Nuclear Regulatory Commission Regulations Handbook.'' Therefore, this rule will become effective as scheduled.

Dated at Rockville, Maryland, this 1st day of September, 2015.

For the Nuclear Regulatory Commission.

Cindy Bladey,

Chief, Rules, Announcements, and Directives Branch, Division of Administrative Services, Office of Administration.

[FR Doc. 2015–22053 Filed 9–4–15; 8:45 am]

BILLING CODE 7590–01–P

DEPARTMENT OF TRANSPORTATION

Federal Aviation Administration

14 CFR Part 97

[Docket No. 31033; Amdt. No. 3657]

Standard Instrument Approach Procedures, and Takeoff Minimums and Obstacle Departure Procedures; Miscellaneous Amendments

AGENCY: Federal Aviation Administration (FAA), DOT.

ACTION: Final rule.

SUMMARY: This rule establishes, amends, suspends, or removes Standard Instrument Approach Procedures (SIAPs) and associated Takeoff Minimums and Obstacle Departure Procedures (ODPs) for operations at certain airports. These regulatory actions are needed because of the adoption of new or revised criteria, or because of changes occurring in the National Airspace System, such as the

commissioning of new navigational facilities, adding new obstacles, or changing air traffic requirements. These changes are designed to provide safe and efficient use of the navigable airspace and to promote safe flight operations under instrument flight rules at the affected airports.

DATES: This rule is effective September 8, 2015. The compliance date for each SIAP, associated Takeoff Minimums, and ODP is specified in the amendatory provisions.

The incorporation by reference of certain publications listed in the regulations is approved by the Director of the Federal Register as of September 8, 2015.

ADDRESSES: Availability of matters incorporated by reference in the amendment is as follows:

For Examination

1. U.S. Department of Transportation, Docket Ops-M30, 1200 New Jersey Avenue SE., West Bldg., Ground Floor, Washington, DC 20590–0001.
2. The FAA Air Traffic Organization Service Area in which the affected airport is located;
3. The office of Aeronautical Navigation Products, 6500 South MacArthur Blvd., Oklahoma City, OK 73169 or,
4. The National Archives and Records Administration (NARA). For information on the availability of this material at NARA, call 202–741–6030, or go to: *http://www.archives.gov/federal_register/code_of_federal_regulations/ibr_locations.html.*

Availability

All SIAPs and Takeoff Minimums and ODPs are available online free of charge. Visit the National Flight Data Center at *nfdc.faa.gov* to register. Additionally, individual SIAP and Takeoff Minimums and ODP copies may be obtained from the FAA Air Traffic Organization Service Area in which the affected airport is located.

FOR FURTHER INFORMATION CONTACT: Richard A. Dunham III, Flight Procedure Standards Branch (AFS–420), Flight Technologies and Programs Divisions, Flight Standards Service, Federal Aviation Administration, Mike Monroney Aeronautical Center, 6500 South MacArthur Blvd. Oklahoma City, OK 73169 (Mail Address: P.O. Box 25082, Oklahoma City, OK 73125) Telephone: (405) 954–4164.

SUPPLEMENTARY INFORMATION: This rule amends Title 14 of the Code of Federal Regulations, Part 97 (14 CFR part 97), by establishing, amending, suspending, or removes SIAPS, Takeoff Minimums and/or ODPS. The complete regulatory description of each SIAP and its associated Takeoff Minimums or ODP for an identified airport is listed on FAA form documents which are incorporated by reference in this amendment under 5 U.S.C. 552(a), 1 CFR part 51, and 14 CFR part § 97.20. The applicable FAA forms are FAA Forms 8260–3, 8260–4, 8260–5, 8260–15A, and 8260–15B when required by an entry on 8260–15A.

The large number of SIAPs, Takeoff Minimums and ODPs, their complex nature, and the need for a special format make publication in the **Federal Register** expensive and impractical. Further, airmen do not use the regulatory text of the SIAPs, Takeoff Minimums or ODPs, but instead refer to their graphic depiction on charts printed by publishers of aeronautical materials. Thus, the advantages of incorporation by reference are realized and publication of the complete description of each SIAP, Takeoff Minimums and ODP listed on FAA form documents is unnecessary. This amendment provides the affected CFR and specifies the types of SIAPs, Takeoff Minimums and ODPs with their applicable effective dates. This amendment also identifies the airport and its location, the procedure, and the amendment number.

Availability and Summary of Material Incorporated by Reference

The material incorporated by reference is publicly available as listed in the **ADDRESSES** section.

The material incorporated by reference describes SIAPS, Takeoff Minimums and/or ODPS as identified in the amendatory language for part 97 of this final rule.

The Rule

This amendment to 14 CFR part 97 is effective upon publication of each separate SIAP, Takeoff Minimums and ODP as Amended in the transmittal. Some SIAP and Takeoff Minimums and textual ODP amendments may have been issued previously by the FAA in a Flight Data Center (FDC) Notice to Airmen (NOTAM) as an emergency action of immediate flight safety relating directly to published aeronautical charts.

The circumstances that created the need for some SIAP and Takeoff Minimums and ODP amendments may require making them effective in less than 30 days. For the remaining SIAPs and Takeoff Minimums and ODPs, an effective date at least 30 days after publication is provided.

Further, the SIAPs and Takeoff Minimums and ODPs contained in this amendment are based on the criteria contained in the U.S. Standard for Terminal Instrument Procedures (TERPS). In developing these SIAPs and Takeoff Minimums and ODPs, the TERPS criteria were applied to the conditions existing or anticipated at the affected airports. Because of the close and immediate relationship between these SIAPs, Takeoff Minimums and ODPs, and safety in air commerce, I find that notice and public procedure under 5 U.S.C. 553(b) are impracticable and contrary to the public interest and, where applicable, under 5 U.S.C. 553(d), good cause exists for making some SIAPs effective in less than 30 days.

The FAA has determined that this regulation only involves an established body of technical regulations for which frequent and routine amendments are necessary to keep them operationally current. It, therefore—(1) Is not a ''significant regulatory action'' under Executive Order 12866; (2) is not a ''significant rule'' under DOT Regulatory Policies and Procedures (44 FR 11034; February 26, 1979); and (3) does not warrant preparation of a regulatory evaluation as the anticipated impact is so minimal. For the same reason, the FAA certifies that this amendment will not have a significant economic impact on a substantial number of small entities under the criteria of the Regulatory Flexibility Act.

List of Subjects in 14 CFR Part 97:

Air traffic control, Airports, Incorporation by reference, Navigation (air).

Issued in Washington, DC, on August 14, 2015.

John Duncan,

Director, Flight Standards Service.

Adoption of the Amendment

Accordingly, pursuant to the authority delegated to me, Title 14, Code of Federal Regulations, Part 97 (14 CFR part 97) is amended by establishing, amending, suspending, or removing Standard Instrument Approach Procedures and/or Takeoff Minimums and Obstacle Departure Procedures effective at 0901 UTC on the dates specified, as follows:

PART 97—STANDARD INSTRUMENT APPROACH PROCEDURES

■ 1. The authority citation for part 97 continues to read as follows:

Authority: 49 U.S.C. 106(g), 40103, 40106, 40113, 40114, 40120, 44502, 44514, 44701, 44719, 44721–44722.

■ 2. Part 97 is amended to read as follows:

Effective 17 SEPTEMBER 2015

Augusta, GA, Daniel Field, RNAV (GPS) RWY 11, Amdt 1A
Grenada, MS, Grenada Muni, ILS OR LOC/DME RWY 13, Amdt 2B
Grenada, MS, Grenada Muni, RNAV (GPS) RWY 13, Amdt 1A
Jasper, TN, Marion County-Brown Field, RNAV (GPS) RWY 4, Orig-A

Effective 15 OCTOBER 2015

Crescent City, CA, Jack Mc Namara Field, ILS OR LOC RWY 12, Amdt 9
Crescent City, CA, Jack Mc Namara Field, RNAV (GPS) RWY 12, Amdt 2
Crescent City, CA, Jack Mc Namara Field, RNAV (GPS) RWY 36, Amdt 1
Crescent City, CA, Jack Mc Namara Field, Takeoff Minimums and Obstacle DP, Amdt 2
Crescent City, CA, Jack Mc Namara Field, VOR RWY 12, Amdt 12
Crescent City, CA, Jack Mc Namara Field, VOR/DME RWY 12, Amdt 14
Crescent City, CA, Jack Mc Namara Field, VOR/DME RWY 36, Amdt 12
Punta Gorda, FL, Punta Gorda, ILS OR LOC RWY 4, Orig
Punta Gorda, FL, Punta Gorda, RNAV (GPS) RWY 4, Amdt 2
Punta Gorda, FL, Punta Gorda, RNAV (GPS) RWY 15, Amdt 1
Punta Gorda, FL, Punta Gorda, RNAV (GPS) RWY 22, Amdt 1
Punta Gorda, FL, Punta Gorda, RNAV (GPS) RWY 33, Amdt 1
Punta Gorda, FL, Punta Gorda, Takeoff Minimums and Obstacle DP, Amdt 3
Punta Gorda, FL, Punta Gorda, VOR RWY 4, Amdt 1
Punta Gorda, FL, Punta Gorda, VOR RWY 22, Amdt 5
Meridian, MS, Key Field, RADAR–1, Orig
Lebanon, NH, Lebanon Muni, ILS OR LOC RWY 18, Amdt 6
Oneonta, NY, Oneonta Muni, Takeoff Minimums and Obstacle DP, Amdt 1
Greer, SC, Greenville Spartanburg Intl, Takeoff Minimums and Obstacle DP, Amdt 1A
Spartanburg, SC, Spartanburg Downtown Memorial, Takeoff Minimums and Obstacle DP, Amdt 1A
Pulaski, TN, Abernathy Field, VOR/DME RWY 34, Amdt 3
Lynchburg, VA, Falwell, RNAV (GPS) RWY 28, Orig-A
Newport, VT, Newport State, RNAV (GPS) RWY 36, Amdt 1
Puyallup, WA, Pierce County—Thun Field, Takeoff Minimums and Obstacle DP, Amdt 2
Seattle, WA, Seattle-Tacoma Intl, ILS OR LOC RWY 16C, ILS RWY 16C (SA CAT I), ILS RWY 16C (CAT II), ILS RWY 16C (CAT III), Amdt 16
Seattle, WA, Seattle-Tacoma Intl, ILS OR LOC RWY 16L, ILS RWY 16L (SA CAT I), ILS RWY 16L (CAT II), ILS RWY 16L (CAT III), Amdt 7
Seattle, WA, Seattle-Tacoma Intl, ILS OR LOC RWY 16R, ILS RWY 16R (SA CAT I), ILS RWY 16R (CAT II), ILS RWY 16R (CAT III), Amdt 4
Seattle, WA, Seattle-Tacoma Intl, RNAV (GPS) Y RWY 16L, Amdt 5
Seattle, WA, Seattle-Tacoma Intl, RNAV (RNP) Z RWY 16L, Amdt 2

RESCINDED: On July 31, 2015 (80 FR 45604), the FAA published an Amendment in Docket No. 31026, Amdt No. 3651, to Part 97 of the Federal Aviation Regulations under section 97.29. The following entry for Las Vegas, NV, effective August 20, 2015 is hereby rescinded in its entirety:

Las Vegas, NV, Mc Carran Intl, ILS OR LOC RWY 25R, Amdt 18

[FR Doc. 2015–22012 Filed 9–4–15; 8:45 am]

BILLING CODE 4910–13–P

DEPARTMENT OF TRANSPORTATION

Federal Aviation Administration

14 CFR Part 97

[Docket No. 31036; Amdt. No. 3660]

Standard Instrument Approach Procedures, and Takeoff Minimums and Obstacle Departure Procedures; Miscellaneous Amendments

AGENCY: Federal Aviation Administration (FAA), DOT.

ACTION: Final rule.

SUMMARY: This rule amends, suspends, or removes Standard Instrument Approach Procedures (SIAPs) and associated Takeoff Minimums and Obstacle Departure Procedures for operations at certain airports. These regulatory actions are needed because of the adoption of new or revised criteria, or because of changes occurring in the National Airspace System, such as the commissioning of new navigational facilities, adding new obstacles, or changing air traffic requirements. These changes are designed to provide for the safe and efficient use of the navigable airspace and to promote safe flight operations under instrument flight rules at the affected airports.

DATES: This rule is effective September 8, 2015. The compliance date for each SIAP, associated Takeoff Minimums, and ODP is specified in the amendatory provisions.

The incorporation by reference of certain publications listed in the regulations is approved by the Director of the Federal Register as of September 8, 2015.

ADDRESSES: Availability of matter incorporated by reference in the amendment is as follows:

For Examination

1. U.S. Department of Transportation, Docket Ops–M30, 1200 New Jersey Avenue SE., West Bldg., Ground Floor, Washington, DC, 20590–0001;
2. The FAA Air Traffic Organization Service Area in which the affected airport is located;
3. The office of Aeronautical Navigation Products, 6500 South MacArthur Blvd., Oklahoma City, OK 73169 or,
4. The National Archives and Records Administration (NARA). For information on the availability of this material at NARA, call 202–741–6030, or go to: *http://www.archives.gov/federal_register/code_of_federal_regulations/ibr_locations.html.*

Availability

All SIAPs and Takeoff Minimums and ODPs are available online free of charge. Visit the National Flight Data Center online at *nfdc.faa.gov* to register. Additionally, individual SIAP and Takeoff Minimums and ODP copies may be obtained from the FAA Air Traffic Organization Service Area in which the affected airport is located.

FOR FURTHER INFORMATION CONTACT: Richard A. Dunham III, Flight Procedure Standards Branch (AFS–420) Flight Technologies and Procedures Division, Flight Standards Service, Federal Aviation Administration, Mike Monroney Aeronautical Center, 6500 South MacArthur Blvd., Oklahoma City, OK 73169 (Mail Address: P.O. Box 25082 Oklahoma City, OK 73125) telephone: (405) 954–4164.

SUPPLEMENTARY INFORMATION: This rule amends Title 14, Code of Federal Regulations, Part 97 (14 CFR part 97) by amending the referenced SIAPs. The complete regulatory description of each SIAP is listed on the appropriate FAA Form 8260, as modified by the National Flight Data Center (NFDC)/Permanent Notice to Airmen (P–NOTAM), and is incorporated by reference under 5 U.S.C. 552(a), 1 CFR part 51, and 14 CFR 97.20. The large number of SIAPs, their complex nature, and the need for a special format make their verbatim publication in the **Federal Register** expensive and impractical. Further, airmen do not use the regulatory text of the SIAPs, but refer to their graphic depiction on charts printed by publishers of aeronautical materials. Thus, the advantages of incorporation by reference are realized and publication of the complete description

of each SIAP contained on FAA form documents is unnecessary.

This amendment provides the affected CFR sections, and specifies the SIAPs and Takeoff Minimums and ODPs with their applicable effective dates. This amendment also identifies the airport and its location, the procedure and the amendment number.

Availability and Summary of Material Incorporated by Reference

The material incorporated by reference is publicly available as listed in the **ADDRESSES** section.

The material incorporated by reference describes SIAPs, Takeoff Minimums and ODPs as identified in the amendatory language for part 97 of this final rule.

The Rule

This amendment to 14 CFR part 97 is effective upon publication of each separate SIAP and Takeoff Minimums and ODP as amended in the transmittal. For safety and timeliness of change considerations, this amendment incorporates only specific changes contained for each SIAP and Takeoff Minimums and ODP as modified by FDC permanent NOTAMs.

The SIAPs and Takeoff Minimums and ODPs, as modified by FDC permanent NOTAM, and contained in this amendment are based on the criteria contained in the U.S. Standard for Terminal Instrument Procedures (TERPS). In developing these changes to SIAPs and Takeoff Minimums and ODPs, the TERPS criteria were applied only to specific conditions existing at the affected airports. All SIAP amendments in this rule have been previously issued by the FAA in a FDC NOTAM as an emergency action of immediate flight safety relating directly to published aeronautical charts.

The circumstances that created the need for these SIAP and Takeoff Minimums and ODP amendments require making them effective in less than 30 days.

Because of the close and immediate relationship between these SIAPs, Takeoff Minimums and ODPs, and safety in air commerce, I find that notice and public procedure under 5 U.S.C. 553(b) are impracticable and contrary to the public interest and, where applicable, under 5 U.S.C. 553(d), good cause exists for making these SIAPs effective in less than 30 days.

The FAA has determined that this regulation only involves an established body of technical regulations for which frequent and routine amendments are necessary to keep them operationally current. It, therefore—(1) is not a ''significant regulatory action'' under Executive Order 12866; (2) is not a ''significant rule'' under DOT regulatory Policies and Procedures (44 FR 11034; February 26, 1979); and (3) does not warrant preparation of a regulatory evaluation as the anticipated impact is so minimal. For the same reason, the FAA certifies that this amendment will not have a significant economic impact on a substantial number of small entities under the criteria of the Regulatory Flexibility Act.

List of Subjects in 14 CFR Part 97

Air Traffic Control, Airports, Incorporation by reference, Navigation (Air).

Issued in Washington, DC, on August 28, 2015.

John Duncan,

Director, Flight Standards Service.

Adoption of the Amendment

Accordingly, pursuant to the authority delegated to me, Title 14, Code of Federal regulations, Part 97, (14 CFR part 97), is amended by amending Standard Instrument Approach Procedures and Takeoff Minimums and ODPs, effective at 0901 UTC on the dates specified, as follows:

PART 97—STANDARD INSTRUMENT APPROACH PROCEDURES

■ 1. The authority citation for part 97 continues to read as follows:

Authority: 49 U.S.C. 106(g), 40103, 40106, 40113, 40114, 40120, 44502, 44514, 44701, 44719, 44721–44722.

■ 2. Part 97 is amended to read as follows:

By amending: § 97.23 VOR, VOR/DME, VOR or TACAN, and VOR/DME or TACAN; § 97.25 LOC, LOC/DME, LDA, LDA/DME, SDF, SDF/DME; § 97.27 NDB, NDB/DME; § 97.29 ILS, ILS/DME, MLS, MLS/DME, MLS/RNAV; § 97.31 RADAR SIAPs; § 97.33 RNAV SIAPs; and § 97.35 COPTER SIAPs, Identified as follows:

** * * Effective Upon Publication*

AIRAC date	State	City	Airport	FDC No.	FDC date	Subject
15-Oct-15	MI	Owosso	Owosso Community	4/0425	08/06/15	RNAV (GPS) RWY 29, Amdt 1A.
15-Oct-15	MI	Owosso	Owosso Community	4/0426	08/06/15	VOR/DME RWY 29, Amdt 1A.
15-Oct-15	VA	Richmond	Richmond Executive-Chesterfield County.	5/0091	08/06/15	RNAV (GPS) RWY 15, Amdt 1B.
15-Oct-15	VA	Richmond	Richmond Executive-Chesterfield County.	5/0092	08/06/15	ILS OR LOC RWY 33, Amdt 2C.
15-Oct-15	VA	Richmond	Richmond Executive-Chesterfield County.	5/0093	08/06/15	RNAV (GPS) RWY 33, Orig-C.
15-Oct-15	OK	Oklahoma City	Wiley Post	5/0523	08/13/15	ILS OR LOC RWY 17L, Amdt 11.
15-Oct-15	OK	Oklahoma City	Wiley Post	5/0524	08/13/15	ILS OR LOC RWY 35R, Orig.
15-Oct-15	OK	Oklahoma City	Wiley Post	5/0525	08/13/15	RNAV (GPS) RWY 35R, Orig.
15-Oct-15	CA	San Martin	South County Arpt Of Santa Clara County.	5/0904	08/13/15	RNAV (GPS) RWY 32, Orig-A.
15-Oct-15	CA	San Martin	South County Arpt Of Santa Clara County.	5/0905	08/13/15	Takeoff Minimums and (Obstacle) DP, Amdt 1.
15-Oct-15	MT	Choteau	Choteau	5/0915	08/13/15	NDB OR GPS RWY 23, Orig-B.
15-Oct-15	IN	Griffith	Griffith-Merrillville	5/1158	08/13/15	VOR RWY 8, Amdt 8.
15-Oct-15	KS	Junction City	Freeman Field	5/1341	08/17/15	RNAV (GPS) RWY 36, Orig-C.
15-Oct-15	KS	Junction City	Freeman Field	5/1364	08/17/15	NDB B, Amdt 5.
15-Oct-15	TX	Falfurrias	Brooks County	5/1480	08/13/15	RNAV (GPS) RWY 35, Orig.
15-Oct-15	SD	Sturgis	Sturgis Muni	5/1485	08/13/15	Takeoff Minimums and (Obstacle) DP, Amdt 1.
15-Oct-15	GA	Atlanta	Dekalb-Peachtree	5/1788	08/17/15	VOR/DME RWY 21L, Amdt 2B.
15-Oct-15	OK	Ardmore	Ardmore Downtown Executive.	5/1987	08/06/15	RNAV (GPS) RWY 35, Orig-A.
15-Oct-15	CA	Oroville	Oroville Muni	5/2201	08/12/15	RNAV (GPS) RWY 2, Orig-B.
15-Oct-15	CA	Oroville	Oroville Muni	5/2202	08/12/15	VOR–A, Amdt 7B.

AIRAC date	State	City	Airport	FDC No.	FDC date	Subject
15-Oct-15	MT	Dillon	Dillon	5/2283	08/06/15	Takeoff Minimums and (Obstacle) DP, Amdt 3.
15-Oct-15	AK	Kotzebue	Ralph Wien Memorial	5/2312	08/12/15	RNAV (GPS) RWY 27, Orig.
15-Oct-15	AK	Kotzebue	Ralph Wien Memorial	5/2313	08/12/15	ILS OR LOC/DME RWY 9, Orig.
15-Oct-15	AK	Kotzebue	Ralph Wien Memorial	5/2314	08/12/15	RNAV (GPS) RWY 9, Orig.
15-Oct-15	AK	Kotzebue	Ralph Wien Memorial	5/2316	08/12/15	VOR/DME RWY 9, Orig.
15-Oct-15	AK	Kotzebue	Ralph Wien Memorial	5/2317	08/12/15	VOR RWY 9, Orig.
15-Oct-15	AK	Big Lake	Big Lake	5/2398	08/06/15	RNAV (GPS) RWY 7, Amdt 1A.
15-Oct-15	CA	Palo Alto	Palo Alto Arpt Of Santa Clara Co.	5/2423	08/17/15	VOR/DME RWY 31, Orig-C.
15-Oct-15	CA	Palo Alto	Palo Alto Arpt Of Santa Clara Co.	5/2424	08/17/15	Takeoff Minimums and (Obstacle) DP, Orig-A.
15-Oct-15	AK	Yakutat	Yakutat	5/3056	08/17/15	RNAV (GPS) RWY 2, Amdt 3A.
15-Oct-15	IL	Belleville	Scott AFB/MidAmerica	5/3238	08/20/15	ILS OR LOC RWY 32R, Orig-F.
15-Oct-15	IA	Le Mars	Le Mars Muni	5/3889	08/20/15	RNAV (GPS) RWY 18, Amdt 1A.
15-Oct-15	IA	Le Mars	Le Mars Muni	5/3890	08/20/15	RNAV (GPS) RWY 36, Amdt 1A.
15-Oct-15	NJ	Robbinsville	Trenton-Robbinsville	5/4022	08/06/15	Takeoff Minimums and (Obstacle) DP, Amdt 2.
15-Oct-15	WI	La Pointe	Major Gilbert Field	5/4269	08/06/15	RNAV (GPS) RWY 4, Orig.
15-Oct-15	WI	La Pointe	Major Gilbert Field	5/4270	08/06/15	RNAV (GPS) RWY 22, Orig-A.
15-Oct-15	OK	Mangum	Scott Field	5/4417	08/24/15	RNAV (GPS) RWY 17, Amdt 1.
15-Oct-15	OK	Mangum	Scott Field	5/4425	08/24/15	RNAV (GPS) RWY 35, Amdt 1.
15-Oct-15	NE	Beatrice	Beatrice Muni	5/4566	08/24/15	RNAV (GPS) RWY 14, Amdt 1A.
15-Oct-15	NE	Beatrice	Beatrice Muni	5/4567	08/24/15	RNAV (GPS) RWY 32, Amdt 1A.
15-Oct-15	NE	Beatrice	Beatrice Muni	5/4569	08/24/15	VOR RWY 14, Amdt 18A.
15-Oct-15	AK	Kivalina	Kivalina	5/4604	08/10/15	Takeoff Minimums and (Obstacle) DP, Orig.
15-Oct-15	MN	Faribault	Faribault Muni	5/4620	08/24/15	VOR–A, Amdt 6.
15-Oct-15	AL	Mobile	Mobile Downtown	5/4831	08/12/15	VOR RWY 18, Amdt 2.
15-Oct-15	OK	Ardmore	Ardmore Downtown Executive.	5/5003	08/06/15	RNAV (GPS) RWY 17, Orig-A.
15-Oct-15	MI	Muskegon	Muskegon County	5/5006	08/06/15	RNAV (GPS) RWY 14, Amdt 1.
15-Oct-15	OH	Mansfield	Mansfield Lahm Rgnl	5/5009	08/06/15	RNAV (GPS) RWY 23, Orig.
15-Oct-15	OH	Mansfield	Mansfield Lahm Rgnl	5/5014	08/06/15	RNAV (GPS) RWY 32, Orig-C.
15-Oct-15	IL	Dixon	Dixon Muni-Charles R Walgreen Field.	5/5030	08/06/15	RNAV (GPS) RWY 8, Amdt 1A.
15-Oct-15	IL	Dixon	Dixon Muni-Charles R Walgreen Field.	5/5032	08/06/15	VOR–A, Amdt 10A.
15-Oct-15	IL	Dixon	Dixon Muni-Charles R Walgreen Field.	5/5033	08/06/15	RNAV (GPS) RWY 26, Orig-A.
15-Oct-15	WY	Worland	Worland Muni	5/5173	08/06/15	VOR RWY 16, Amdt 6A.
15-Oct-15	WY	Worland	Worland Muni	5/5174	08/06/15	RNAV (GPS) RWY 16, Orig-A.
15-Oct-15	WY	Worland	Worland Muni	5/5175	08/06/15	RNAV (GPS) RWY 34, Orig-A.
15-Oct-15	SC	Orangeburg	Orangeburg Muni	5/5199	08/06/15	RNAV (GPS) RWY 17, Orig-A.
15-Oct-15	FL	Miami	Miami Intl	5/5231	08/13/15	RNAV (GPS) RWY 8L, Amdt 2.
15-Oct-15	WY	Greybull	South Big Horn County	5/5658	08/06/15	RNAV (GPS) RWY 7, Orig-B.
15-Oct-15	WY	Greybull	South Big Horn County	5/5662	08/06/15	RNAV (GPS) RWY 34, Amdt 1B.
15-Oct-15	WY	Greybull	South Big Horn County	5/5663	08/06/15	NDB RWY 34, Amdt 3A.
15-Oct-15	FL	St Augustine	Northeast Florida Rgnl	5/5849	08/24/15	ILS OR LOC/DME RWY 31, Orig-B.
15-Oct-15	FL	St Augustine	Northeast Florida Rgnl	5/5850	08/24/15	RNAV (GPS) RWY 13, Orig-C.
15-Oct-15	GA	Millen	Millen	5/5907	08/24/15	RNAV (GPS) RWY 35, Amdt 1A.
15-Oct-15	KY	Louisville	Louisville Intl-Standiford Field.	5/6011	08/24/15	RNAV (GPS) RWY 29, Orig-A.
15-Oct-15	KY	Louisville	Louisville Intl-Standiford Field.	5/6012	08/24/15	RNAV (GPS) Y RWY 17L, Amdt 1B.
15-Oct-15	KY	Louisville	Louisville Intl-Standiford Field.	5/6015	08/24/15	RNAV (GPS) Y RWY 17R, Amdt 1B.
15-Oct-15	KY	Louisville	Louisville Intl-Standiford Field.	5/6016	08/24/15	RNAV (GPS) Y RWY 35L, Amdt 1A.
15-Oct-15	KY	Louisville	Louisville Intl-Standiford Field.	5/6017	08/24/15	RNAV (GPS) Y RWY 35R, Amdt 1B.
15-Oct-15	KY	Louisville	Louisville Intl-Standiford Field.	5/6018	08/24/15	ILS OR LOC RWY 35L, ILS RWY 35L (SA CAT I), ILS RWY 35L (CAT II & III), Amdt 3C.
15-Oct-15	KY	Louisville	Louisville Intl-Standiford Field.	5/6021	08/24/15	ILS OR LOC RWY 35R , ILS RWY 35R (SA CAT I), ILS RWY 35R (CAT II & III), Amdt 4C.
15-Oct-15	KY	Louisville	Louisville Intl-Standiford Field.	5/6023	08/24/15	ILS OR LOC RWY 17L, Amdt 4C.
15-Oct-15	KY	Louisville	Louisville Intl-Standiford Field.	5/6024	08/24/15	ILS OR LOC RWY 17R, Amdt 3D.

AIRAC date	State	City	Airport	FDC No.	FDC date	Subject
15-Oct-15	VA	Norfolk	Norfolk Intl	5/6033	08/20/15	RNAV (GPS) RWY 14, Orig-D.
15-Oct-15	LA	Baton Rouge	Baton Rouge Metropolitan, Ryan Field.	5/6037	08/24/15	VOR RWY 4L, Amdt 18.
15-Oct-15	WI	Appleton	Outagamie County Regional.	5/6205	08/24/15	ILS OR LOC RWY 3, Amdt 17B.
15-Oct-15	WI	Appleton	Outagamie County Regional.	5/6206	08/24/15	ILS OR LOC RWY 30, Amdt 3A.
15-Oct-15	WI	Appleton	Outagamie County Regional.	5/6208	08/24/15	RNAV (GPS) RWY 12, Amdt 1.
15-Oct-15	WI	Appleton	Outagamie County Regional.	5/6212	08/24/15	RNAV (GPS) RWY 3, Amdt 1.
15-Oct-15	WI	Appleton	Outagamie County Regional.	5/6213	08/24/15	RNAV (GPS) RWY 30, Amdt 1.
15-Oct-15	WI	Appleton	Outagamie County Regional.	5/6216	08/24/15	VOR/DME RWY 3, Amdt 8F.
15-Oct-15	IL	Effingham	Effingham County Memorial.	5/6336	08/24/15	RNAV (GPS) RWY 1, Orig-B.
15-Oct-15	IL	Effingham	Effingham County Memorial.	5/6337	08/24/15	RNAV (GPS) RWY 29, Orig-A.
15-Oct-15	IL	Effingham	Effingham County Memorial.	5/6339	08/24/15	VOR RWY 1, Amdt 10B.
15-Oct-15	NC	Wilson	Wilson Industrial Air Center.	5/6435	08/24/15	RNAV (GPS) RWY 21, Orig-D.
15-Oct-15	NC	Wilson	Wilson Industrial Air Center.	5/6443	08/24/15	RNAV (GPS) RWY 3, Amdt 1B.
15-Oct-15	MT	Stevensville	Stevensville	5/6652	08/12/15	RNAV (GPS)-A, Orig-A.
15-Oct-15	TN	Morristown	Moore-Murrell	5/6732	08/12/15	RNAV (GPS) RWY 5, Orig-B.
15-Oct-15	TN	Morristown	Moore-Murrell	5/6756	08/12/15	RNAV (GPS) RWY 23, Orig-C.
15-Oct-15	TN	Morristown	Moore-Murrell	5/6758	08/12/15	NDB RWY 5, Amdt 5B.
15-Oct-15	TN	Morristown	Moore-Murrell	5/6759	08/12/15	SDF RWY 5, Amdt 5B.
15-Oct-15	WV	Logan	Logan County	5/6766	08/12/15	RNAV (GPS) RWY 6, Orig-A.
15-Oct-15	WV	Logan	Logan County	5/6768	08/12/15	RNAV (GPS) RWY 24, Orig-A.
15-Oct-15	ME	Old Town	Dewitt Fld, Old Town Muni.	5/6882	08/24/15	VOR/DME RWY 22, Amdt 5A.
15-Oct-15	OR	Portland	Portland Intl	5/7120	08/12/15	RNAV (RNP) Z RWY 28R, Amdt 1A.
15-Oct-15	WY	Saratoga	Shively Field	5/7337	08/10/15	RNAV (GPS)-B, Orig-A.
15-Oct-15	WY	Saratoga	Shively Field	5/7338	08/10/15	NDB–A, Amdt 1A.
15-Oct-15	WY	Saratoga	Shively Field	5/7342	08/10/15	RNAV (GPS) RWY 5, Orig-A.
15-Oct-15	WY	Casper	Casper/Natrona County Intl.	5/7434	08/06/15	VOR/DME RWY 3, Amdt 6A.
15-Oct-15	CA	Long Beach	Long Beach/Daugherty Field/.	5/7435	08/06/15	RNAV (RNP) RWY 12, Amdt 1A.
15-Oct-15	MD	Cumberland	Greater Cumberland Rgnl.	5/7472	08/13/15	RNAV (GPS) RWY 23, Orig-C.
15-Oct-15	IA	Mason City	Mason City Muni	5/7795	08/20/15	RNAV (GPS) RWY 30, Amdt 1A.
15-Oct-15	IA	Mason City	Mason City Muni	5/7797	08/20/15	VOR/DME RWY 18, Amdt 5A.
15-Oct-15	IA	Mason City	Mason City Muni	5/7801	08/20/15	VOR RWY 36, Amdt 6D.
15-Oct-15	MT	Miles City	Frank Wiley Field	5/7812	08/10/15	RNAV (GPS) RWY 4, Amdt 2A.
15-Oct-15	MT	Miles City	Frank Wiley Field	5/7814	08/10/15	RNAV (GPS) RWY 22, Orig-B.
15-Oct-15	MT	Miles City	Frank Wiley Field	5/7815	08/10/15	VOR/DME RWY 22, Amdt 8B.
15-Oct-15	MT	Miles City	Frank Wiley Field	5/7816	08/10/15	VOR/DME RWY 4, Orig-A.
15-Oct-15	MT	Miles City	Frank Wiley Field	5/7818	08/10/15	VOR RWY 4, Amdt 12A.
15-Oct-15	TX	Baytown	RWJ Airpark	5/7916	08/20/15	RNAV (GPS) RWY 26, Amdt 1A.
15-Oct-15	FL	Jacksonville	Jacksonville Intl	5/7930	08/13/15	RNAV (GPS) Z RWY 32, Amdt 2C.
15-Oct-15	TX	Baytown	RWJ Airpark	5/7933	08/20/15	RNAV (GPS) RWY 32, Orig.
15-Oct-15	LA	Vivian	Vivian	5/8309	08/10/15	RNAV (GPS) RWY 9, Orig-A.
15-Oct-15	LA	Vivian	Vivian	5/8310	08/10/15	RNAV (GPS) RWY 27, Orig-A.
15-Oct-15	LA	Vivian	Vivian	5/8311	08/10/15	VOR/DME–A, Amdt 3A.
15-Oct-15	LA	Vivian	Vivian	5/8312	08/10/15	NDB RWY 9, Amdt 2A.
15-Oct-15	AK	Coldfoot	Coldfoot	5/8694	08/06/15	RNAV (GPS)-A, Orig-A.
15-Oct-15	UT	Cedar City	Cedar City Rgnl	5/8854	08/07/15	ILS OR LOC RWY 20, Amdt 3C.
15-Oct-15	NM	Carlsbad	Cavern City Air Trml	5/8920	08/13/15	RNAV (GPS) RWY 32L, Amdt 1A.
15-Oct-15	AK	Palmer	Palmer Muni	5/9044	08/07/15	RNAV (GPS)-A, Orig.
15-Oct-15	AK	Palmer	Palmer Muni	5/9045	08/07/15	RNAV (GPS) RWY 9, Amdt 1A.
15-Oct-15	NC	Roanoke Rapids	Halifax-Northampton Rgnl.	5/9599	08/10/15	RNAV (GPS) RWY 20, Amdt 1A.

[FR Doc. 2015–22009 Filed 9–4–15; 8:45 am]
BILLING CODE 4910–13–P

DEPARTMENT OF TRANSPORTATION

Federal Aviation Administration

14 CFR Part 97

[Docket No. 31035; Amdt. No. 3659]

Standard Instrument Approach Procedures, and Takeoff Minimums and Obstacle Departure Procedures; Miscellaneous Amendments

AGENCY: Federal Aviation Administration (FAA), DOT.

ACTION: Final rule.

SUMMARY: This rule establishes, amends, suspends, or removes Standard Instrument Approach Procedures (SIAPs) and associated Takeoff Minimums and Obstacle Departure Procedures (ODPs) for operations at certain airports. These regulatory actions are needed because of the adoption of new or revised criteria, or because of changes occurring in the National Airspace System, such as the commissioning of new navigational facilities, adding new obstacles, or changing air traffic requirements. These changes are designed to provide safe and efficient use of the navigable airspace and to promote safe flight operations under instrument flight rules at the affected airports.

DATES: This rule is effective September 8, 2015. The compliance date for each SIAP, associated Takeoff Minimums, and ODP is specified in the amendatory provisions.

The incorporation by reference of certain publications listed in the regulations is approved by the Director of the Federal Register as of September 8, 2015.

ADDRESSES: Availability of matters incorporated by reference in the amendment is as follows:

For Examination

1. U.S. Department of Transportation, Docket Ops-M30, 1200 New Jersey Avenue SE., West Bldg., Ground Floor, Washington, DC 20590–0001.
2. The FAA Air Traffic Organization Service Area in which the affected airport is located;
3. The office of Aeronautical Navigation Products, 6500 South MacArthur Blvd., Oklahoma City, OK 73169 or,
4. The National Archives and Records Administration (NARA). For information on the availability of this material at NARA, call 202–741–6030, or go to: *http://www.archives.gov/federal_register/code_of_federal_regulations/ibr_locations.html.*

Availability

All SIAPs and Takeoff Minimums and ODPs are available online free of charge. Visit the National Flight Data Center at *nfdc.faa.gov* to register. Additionally, individual SIAP and Takeoff Minimums and ODP copies may be obtained from the FAA Air Traffic Organization Service Area in which the affected airport is located.

FOR FURTHER INFORMATION CONTACT: Richard A. Dunham III, Flight Procedure Standards Branch (AFS–420), Flight Technologies and Programs Divisions, Flight Standards Service, Federal Aviation Administration, Mike Monroney Aeronautical Center, 6500 South MacArthur Blvd., Oklahoma City, OK 73169 (Mail Address: P.O. Box 25082, Oklahoma City, OK 73125), Telephone: (405) 954–4164.

SUPPLEMENTARY INFORMATION: This rule amends Title 14 of the Code of Federal Regulations, Part 97 (14 CFR part 97), by establishing, amending, suspending, or removes SIAPS, Takeoff Minimums and/or ODPS. The complete regulatory description of each SIAP and its associated Takeoff Minimums or ODP for an identified airport is listed on FAA form documents which are incorporated by reference in this amendment under 5 U.S.C. 552(a), 1 CFR part 51, and 14 CFR part § 97.20. The applicable FAA forms are FAA Forms 8260–3, 8260–4, 8260–5, 8260–15A, and 8260–15B when required by an entry on 8260–15A.

The large number of SIAPs, Takeoff Minimums and ODPs, their complex nature, and the need for a special format make publication in the **Federal Register** expensive and impractical. Further, airmen do not use the regulatory text of the SIAPs, Takeoff Minimums or ODPs, but instead refer to their graphic depiction on charts printed by publishers of aeronautical materials. Thus, the advantages of incorporation by reference are realized and publication of the complete description of each SIAP, Takeoff Minimums and ODP listed on FAA form documents is unnecessary. This amendment provides the affected CFR and specifies the types of SIAPs, Takeoff Minimums and ODPs with their applicable effective dates. This amendment also identifies the airport and its location, the procedure, and the amendment number.

Availability and Summary of Material Incorporated by Reference

The material incorporated by reference is publicly available as listed in the **ADDRESSES** section.

The material incorporated by reference describes SIAPS, Takeoff Minimums and/or ODPS as identified in the amendatory language for part 97 of this final rule.

The Rule

This amendment to 14 CFR part 97 is effective upon publication of each separate SIAP, Takeoff Minimums and ODP as Amended in the transmittal. Some SIAP and Takeoff Minimums and textual ODP amendments may have been issued previously by the FAA in a Flight Data Center (FDC) Notice to Airmen (NOTAM) as an emergency action of immediate flight safety relating directly to published aeronautical charts.

The circumstances that created the need for some SIAP and Takeoff Minimums and ODP amendments may require making them effective in less than 30 days. For the remaining SIAPs and Takeoff Minimums and ODPs, an effective date at least 30 days after publication is provided.

Further, the SIAPs and Takeoff Minimums and ODPs contained in this amendment are based on the criteria contained in the U.S. Standard for Terminal Instrument Procedures (TERPS). In developing these SIAPs and Takeoff Minimums and ODPs, the TERPS criteria were applied to the conditions existing or anticipated at the affected airports. Because of the close and immediate relationship between these SIAPs, Takeoff Minimums and ODPs, and safety in air commerce, I find that notice and public procedure under 5 U.S.C. 553(b) are impracticable and contrary to the public interest and, where applicable, under 5 U.S.C 553(d), good cause exists for making some SIAPs effective in less than 30 days.

The FAA has determined that this regulation only involves an established body of technical regulations for which frequent and routine amendments are necessary to keep them operationally current. It, therefore—(1) is not a ''significant regulatory action'' under Executive Order 12866; (2) is not a ''significant rule'' under DOT Regulatory Policies and Procedures (44 FR 11034; February 26, 1979); and (3) does not warrant preparation of a regulatory evaluation as the anticipated impact is so minimal. For the same reason, the FAA certifies that this amendment will not have a significant economic impact on a substantial

number of small entities under the criteria of the Regulatory Flexibility Act.

List of Subjects in 14 CFR Part 97:

Air traffic control, Airports, Incorporation by reference, Navigation (air).

Issued in Washington, DC, on August 28, 2015.

John Duncan,

Director, Flight Standards Service.

Adoption of the Amendment

Accordingly, pursuant to the authority delegated to me, Title 14, Code of Federal Regulations, Part 97 (14 CFR part 97) is amended by establishing, amending, suspending, or removing Standard Instrument Approach Procedures and/or Takeoff Minimums and Obstacle Departure Procedures effective at 0901 UTC on the dates specified, as follows:

PART 97—STANDARD INSTRUMENT APPROACH PROCEDURES

■ 1. The authority citation for part 97 continues to read as follows:

Authority: 49 U.S.C. 106(g), 40103, 40106, 40113, 40114, 40120, 44502, 44514, 44701, 44719, 44721–44722.

■ 2. Part 97 is amended to read as follows:

Effective 15 OCTOBER 2015

Kodiak, AK, Kodiak, ILS Y OR LOC Y RWY 26, Amdt 3
Kodiak, AK, Kodiak, KODIAK SEVEN, Graphic DP
Kodiak, AK, Kodiak, RNAV (GPS) RWY 26, Amdt 2
Kodiak, AK, Kodiak, Takeoff Minimums and Obstacle DP, Amdt 4
Kodiak, AK, Kodiak, VOR RWY 26, Amdt 3
San Jose, CA, Norman Y. Mineta San Jose Intl, ILS OR LOC/DME RWY 30L, Amdt 24
Telluride, CO, Telluride Rgnl, LOC/DME RWY 9, Amdt 3
Telluride, CO, Telluride Rgnl, RNAV (GPS) Y RWY 9, Amdt 1
Telluride, CO, Telluride Rgnl, RNAV (GPS) Z RWY 9, Orig
Boca Raton, FL, Boca Raton, RNAV (GPS) RWY 5, Amdt 1
Chicago, IL, Chicago O'Hare Intl, ILS OR LOC RWY 9L, ILS RWY 9L (SA CAT I), ILS RWY 9L (CAT II), ILS RWY 9L (CAT III), Amdt 3
Chicago, IL, Chicago O'Hare Intl, ILS OR LOC RWY 9R, Amdt 11
Chicago, IL, Chicago O'Hare Intl, ILS OR LOC RWY 10C, ILS RWY 10C (SA CAT I), ILS RWY 10C (CAT II), ILS RWY 10C (CAT III), Amdt 1
Chicago, IL, Chicago O'Hare Intl, ILS OR LOC RWY 10L, ILS RWY 10L (SA CAT I), ILS RWY 10L (CAT II), ILS RWY 10L (CAT III), Amdt 18
Chicago, IL, Chicago O'Hare Intl, ILS OR LOC RWY 10R, Orig
Chicago, IL, Chicago O'Hare Intl, ILS OR LOC RWY 27L, ILS RWY 27L (SA CAT I), ILS RWY 27L (CAT II), ILS RWY 27L (CAT III), Amdt 30
Chicago, IL, Chicago O'Hare Intl, ILS OR LOC RWY 27R, ILS RWY 27R (SA CAT I), ILS RWY 27R (CAT II), ILS RWY 27R (CAT III), Amdt 3
Chicago, IL, Chicago O'Hare Intl, ILS OR LOC RWY 28C, ILS RWY 28C (SA CAT I), ILS RWY 28C (CAT II), ILS RWY 28C (CAT III), Amdt 1
Chicago, IL, Chicago O'Hare Intl, ILS OR LOC RWY 28L, ILS RWY 28L (SA CAT I), ILS RWY 28L (CAT II), ILS RWY 28L, (CAT III), Orig
Chicago, IL, Chicago O'Hare Intl, ILS OR LOC RWY 28R, ILS RWY 28R (SA CAT I), ILS RWY 28R (CAT II), ILS RWY 28R (CAT III), Amdt 17
Chicago, IL, Chicago O'Hare Intl, ILS PRM RWY 10C, ILS PRM RWY 10C (SA CAT I), ILS PRM RWY 10C (CAT II), ILS PRM RWY 10C (CAT III) (CLOSE PARALLEL), Orig
Chicago, IL, Chicago O'Hare Intl, ILS PRM RWY 10R (CLOSE PARALLEL), Orig
Chicago, IL, Chicago O'Hare Intl, RNAV (GPS) RWY 9L, Amdt 3
Chicago, IL, Chicago O'Hare Intl, RNAV (GPS) RWY 9R, Amdt 4
Chicago, IL, Chicago O'Hare Intl, RNAV (GPS) RWY 10C, Amdt 1
Chicago, IL, Chicago O'Hare Intl, RNAV (GPS) RWY 10L, Amdt 5
Chicago, IL, Chicago O'Hare Intl, RNAV (GPS) RWY 10R, Orig
Chicago, IL, Chicago O'Hare Intl, RNAV (GPS) RWY 27R, Amdt 3
Chicago, IL, Chicago O'Hare Intl, RNAV (GPS) RWY 28C, Amdt 1
Chicago, IL, Chicago O'Hare Intl, RNAV (GPS) RWY 28L, Orig
Chicago, IL, Chicago O'Hare Intl, RNAV (GPS) RWY 28R, Amdt 4
Chicago, IL, Chicago O'Hare Intl, RNAV (GPS) PRM RWY 10C (CLOSE PARALLEL), Orig
Chicago, IL, Chicago O'Hare Intl, RNAV (GPS) PRM RWY 10R (CLOSE PARALLEL), Orig
Chicago, IL, Chicago O'Hare Intl, RNAV (GPS) Z RWY 27L, Amdt 4
Chicago, IL, Chicago O'Hare Intl, RNAV (RNP) Y RWY 27L, Amdt 1
Chicago, IL, Chicago O'Hare Intl, Takeoff Minimums and Obstacle DP, Amdt 20
Rantoul, IL, Rantoul Natl Avn Cntr-Frank Elliott Fld, RNAV (GPS) RWY 9, Amdt 2
Rantoul, IL, Rantoul Natl Avn Cntr-Frank Elliott Fld, RNAV (GPS) RWY 18, Amdt 1
Rantoul, IL, Rantoul Natl Avn Cntr-Frank Elliott Fld, RNAV (GPS) RWY 27, Amdt 2
Rantoul, IL, Rantoul Natl Avn Cntr-Frank Elliott Fld, RNAV (GPS) RWY 36, Amdt 1
Valparaiso, IN, Porter County Rgnl, RNAV (GPS) RWY 18, Orig-A
Valparaiso, IN, Porter County Rgnl, RNAV (GPS) RWY 27, Orig-A
North Adams, MA, Harriman-And-West, RNAV (GPS)-A, Orig
Mora, MN, Mora Muni, NDB OR GPS RWY 35, Amdt 3B, CANCELED
Mora, MN, Mora Muni, RNAV (GPS) RWY 35, Orig
Mora, MN, Mora Muni, Takeoff Minimums and Obstacle DP, Orig
Excelsior Springs, MO, Excelsior Springs Memorial, RNAV (GPS)-B, Orig
Sanford, NC, Raleigh Exec Jetport at Sanford-Lee County, ILS Y OR LOC Y RWY 3, Orig
Sanford, NC, Raleigh Exec Jetport at Sanford-Lee County, ILS Z OR LOC Z RWY 3, Amdt 2
Sanford, NC, Raleigh Exec Jetport at Sanford-Lee County, RNAV (GPS) RWY 3, Amdt 2
Sanford, NC, Raleigh Exec Jetport at Sanford-Lee County, RNAV (GPS) RWY 21, Amdt 2
Loup City, NE, Loup City Muni, RNAV (GPS) RWY 16, Orig
Loup City, NE, Loup City Muni, RNAV (GPS) RWY 34, Orig
Loup City, NE, Loup City Muni, Takeoff Minimums and Obstacle DP, Orig
Morristown, NJ, Morristown Muni, ILS OR LOC RWY 23, Amdt 11
Morristown, NJ, Morristown Muni, RNAV (GPS) Z RWY 23, Amdt 1
Pittstown, NJ, Alexandria, RNAV (GPS)-A, Orig
Pittstown, NJ, Alexandria, RNAV (GPS)-B, Orig
Pittstown, NJ, Alexandria, VOR/DME RWY 8, Amdt 2
Clovis, NM, Clovis Muni, ILS OR LOC RWY 4, Amdt 1
Clovis, NM, Clovis Muni, RNAV (GPS) RWY 4, Amdt 1
Clovis, NM, Clovis Muni, RNAV (GPS) RWY 22, Amdt 1
Clovis, NM, Clovis Muni, VOR RWY 22, Amdt 5
New York, NY, John F. Kennedy Intl, Takeoff Minimums and Obstacle DP, Amdt 9
New York, NY, La Guardia, Takeoff Minimums and Obstacle DP, Amdt 10
Oklahoma City, OK, Wiley Post, RNAV (GPS) RWY 17R, Orig
Oklahoma City, OK, Wiley Post, RNAV (GPS) RWY 35L, Orig
Clarksville, VA, Lake Country Regional, RNAV (GPS) RWY 4, Orig-B, CANCELED

Clarksville, VA, Lake Country Regional, RNAV (GPS) RWY 22, Orig-A, CANCELED
Clarksville, VA, Lake Country Regional, RNAV (GPS)-A, Orig
Clarksville, VA, Lake Country Regional, RNAV (GPS)-B, Orig
Suffolk, VA, Suffolk Executive, RNAV (GPS) RWY 7, Amdt 1B
Puyallup, WA, Pierce County—Thun Field, GPS RWY 34, Orig-C, CANCELED
Puyallup, WA, Pierce County—Thun Field, RNAV (GPS) RWY 35, Orig
Seattle, WA, Seattle-Tacoma Intl, RNAV (RNP) Z RWY 34C, Amdt 2
Seattle, WA, Seattle-Tacoma Intl, RNAV (RNP) Z RWY 34L, Amdt 2

[FR Doc. 2015–22010 Filed 9–4–15; 8:45 am]

BILLING CODE 4910–13–P

DEPARTMENT OF TRANSPORTATION

Federal Aviation Administration

14 CFR Part 97

[Docket No. 31034; Amdt. No. 3658]

Standard Instrument Approach Procedures, and Takeoff Minimums and Obstacle Departure Procedures; Miscellaneous Amendments

AGENCY: Federal Aviation Administration (FAA), DOT.

ACTION: Final rule.

SUMMARY: This rule amends, suspends, or removes Standard Instrument Approach Procedures (SIAPs) and associated Takeoff Minimums and Obstacle Departure Procedures for operations at certain airports. These regulatory actions are needed because of the adoption of new or revised criteria, or because of changes occurring in the National Airspace System, such as the commissioning of new navigational facilities, adding new obstacles, or changing air traffic requirements. These changes are designed to provide for the safe and efficient use of the navigable airspace and to promote safe flight operations under instrument flight rules at the affected airports.

DATES: This rule is effective September 1, 2015. The compliance date for each SIAP, associated Takeoff Minimums, and ODP is specified in the amendatory provisions.

The incorporation by reference of certain publications listed in the regulations is approved by the Director of the Federal Register as of September 1, 2015.

ADDRESSES: Availability of matter incorporated by reference in the amendment is as follows:

For Examination

1. U.S. Department of Transportation, Docket Ops-M30, 1200 New Jersey Avenue SE., West Bldg., Ground Floor, Washington, DC, 20590–0001;
2. The FAA Air Traffic Organization Service Area in which the affected airport is located;
3. The office of Aeronautical Navigation Products, 6500 South MacArthur Blvd., Oklahoma City, OK 73169 or,
4. The National Archives and Records Administration (NARA). For information on the availability of this material at NARA, call 202–741–6030, or go to: *http://www.archives.gov/federal_register/code_of_federal_regulations/ibr_locations.html.*

Availability

All SIAPs and Takeoff Minimums and ODPs are available online free of charge. Visit the National Flight Data Center online at *nfdc.faa.gov* to register. Additionally, individual SIAP and Takeoff Minimums and ODP copies may be obtained from the FAA Air Traffic Organization Service Area in which the affected airport is located.

FOR FURTHER INFORMATION CONTACT: Richard A. Dunham III, Flight Procedure Standards Branch (AFS–420), Flight Technologies and Procedures Division, Flight Standards Service, Federal Aviation Administration, Mike Monroney Aeronautical Center, 6500 South MacArthur Blvd., Oklahoma City, OK 73169 (Mail Address: P.O. Box 25082 Oklahoma City, OK 73125) telephone: (405) 954–4164.

SUPPLEMENTARY INFORMATION: This rule amends Title 14, Code of Federal Regulations, Part 97 (14 CFR part 97) by amending the referenced SIAPs. The complete regulatory description of each SIAP is listed on the appropriate FAA Form 8260, as modified by the National Flight Data Center (NFDC)/Permanent Notice to Airmen (P–NOTAM), and is incorporated by reference under 5 U.S.C. 552(a), 1 CFR part 51, and 14 CFR 97.20. The large number of SIAPs, their complex nature, and the need for a special format make their verbatim publication in the **Federal Register** expensive and impractical. Further, airmen do not use the regulatory text of the SIAPs, but refer to their graphic depiction on charts printed by publishers of aeronautical materials. Thus, the advantages of incorporation by reference are realized and publication of the complete description of each SIAP contained on FAA form documents is unnecessary.

This amendment provides the affected CFR sections, and specifies the SIAPs and Takeoff Minimums and ODPs with their applicable effective dates. This amendment also identifies the airport and its location, the procedure and the amendment number.

Availability and Summary of Material Incorporated by Reference

The material incorporated by reference is publicly available as listed in the **ADDRESSES** section.

The material incorporated by reference describes SIAPs, Takeoff Minimums and ODPs as identified in the amendatory language for part 97 of this final rule.

The Rule

This amendment to 14 CFR part 97 is effective upon publication of each separate SIAP and Takeoff Minimums and ODP as amended in the transmittal. For safety and timeliness of change considerations, this amendment incorporates only specific changes contained for each SIAP and Takeoff Minimums and ODP as modified by FDC permanent NOTAMs.

The SIAPs and Takeoff Minimums and ODPs, as modified by FDC permanent NOTAM, and contained in this amendment are based on the criteria contained in the U.S. Standard for Terminal Instrument Procedures (TERPS). In developing these changes to SIAPs and Takeoff Minimums and ODPs, the TERPS criteria were applied only to specific conditions existing at the affected airports. All SIAP amendments in this rule have been previously issued by the FAA in a FDC NOTAM as an emergency action of immediate flight safety relating directly to published aeronautical charts.

The circumstances that created the need for these SIAP and Takeoff Minimums and ODP amendments require making them effective in less than 30 days.

Because of the close and immediate relationship between these SIAPs, Takeoff Minimums and ODPs, and safety in air commerce, I find that notice and public procedure under 5 U.S.C. 553(b) are impracticable and contrary to the public interest and, where applicable, under 5 U.S.C. 553(d), good cause exists for making these SIAPs effective in less than 30 days.

The FAA has determined that this regulation only involves an established body of technical regulations for which frequent and routine amendments are necessary to keep them operationally current. It, therefore—(1) Is not a ''significant regulatory action'' under Executive Order 12866; (2) is not a ''significant rule'' under DOT regulatory Policies and Procedures (44 FR 11034;

February 26, 1979); and (3) does not warrant preparation of a regulatory evaluation as the anticipated impact is so minimal. For the same reason, the FAA certifies that this amendment will not have a significant economic impact on a substantial number of small entities under the criteria of the Regulatory Flexibility Act.

List of Subjects in 14 CFR Part 97

Air traffic control, Airports, Incorporation by reference, Navigation (air).

Issued in Washington, DC, on August 14, 2015.

John Duncan,

Director, Flight Standards Service.

Adoption of the Amendment

Accordingly, pursuant to the authority delegated to me, Title 14, Code of Federal regulations, Part 97, (14 CFR part 97), is amended by amending Standard Instrument Approach Procedures and Takeoff Minimums and ODPs, effective at 0901 UTC on the dates specified, as follows:

PART 97—STANDARD INSTRUMENT APPROACH PROCEDURES

■ 1. The authority citation for part 97 continues to read as follows:

Authority: 49 U.S.C. 106(g), 40103, 40106, 40113, 40114, 40120, 44502, 44514, 44701, 44719, 44721–44722.

■ 2. Part 97 is amended to read as follows:

By amending: § 97.23 VOR, VOR/DME, VOR or TACAN, and VOR/DME or TACAN; § 97.25 LOC, LOC/DME, LDA, LDA/DME, SDF, SDF/DME; § 97.27 NDB, NDB/DME; § 97.29 ILS, ILS/DME, MLS, MLS/DME, MLS/RNAV; § 97.31 RADAR SIAPs; § 97.33 RNAV SIAPs; and § 97.35 COPTER SIAPs, Identified as follows:

** * * Effective Upon Publication*

AIRAC date	State	City	Airport	FDC No.	FDC date	Subject
17-Sep-15	NC	Wilmington	Wilmington Intl	5/0168	07/27/15	ILS Z RWY 24, Orig-A.
17-Sep-15	NH	Lebanon	Lebanon Muni	5/0562	07/28/15	RNAV (GPS) RWY 18, Orig-A.
17-Sep-15	NH	Lebanon	Lebanon Muni	5/0563	07/28/15	RNAV (GPS) RWY 25, Orig-A.
17-Sep-15	NH	Lebanon	Lebanon Muni	5/0565	07/28/15	RNAV (GPS) RWY 36, Orig-A.
17-Sep-15	NH	Lebanon	Lebanon Muni	5/0566	07/28/15	RNAV (GPS) RWY 7, Orig-C.
17-Sep-15	NH	Lebanon	Lebanon Muni	5/0567	07/28/15	VOR RWY 25, Amdt 1A.
17-Sep-15	NH	Lebanon	Lebanon Muni	5/0570	07/28/15	VOR/DME RWY 7, Amdt 1C.
17-Sep-15	WI	Middleton	Middleton Muni—Morey Field.	5/0778	08/03/15	VOR RWY 28, Orig.
17-Sep-15	WI	Middleton	Middleton Muni—Morey Field.	5/0779	08/03/15	RNAV (GPS) RWY 28, Amdt 2.
17-Sep-15	FL	Jacksonville	Jacksonville Intl	5/1388	08/04/15	RNAV (GPS) Z RWY 26, Amdt 2A.
17-Sep-15	AR	Lake Village	Lake Village Muni	5/1683	08/03/15	RNAV (GPS) RWY 1, Orig-A.
17-Sep-15	AR	Lake Village	Lake Village Muni	5/1684	08/03/15	RNAV (GPS) RWY 19, Orig-A.
17-Sep-15	AR	Lake Village	Lake Village Muni	5/1685	08/03/15	VOR–A, Amdt 8A.
17-Sep-15	AR	Lake Village	Lake Village Muni	5/1686	08/03/15	VOR/DME–B, Amdt 6A.
17-Sep-15	WI	Madison	Dane County Rgnl-Truax Field.	5/2008	08/03/15	RNAV (GPS) RWY 14, Amdt 2C.
17-Sep-15	WI	Madison	Dane County Rgnl-Truax Field.	5/2009	08/03/15	RNAV (GPS) RWY 18, Amdt 2C.
17-Sep-15	WI	Madison	Dane County Rgnl-Truax Field.	5/2010	08/03/15	RNAV (GPS) RWY 32, Amdt 2C.
17-Sep-15	WI	Madison	Dane County Rgnl-Truax Field.	5/2011	08/03/15	RNAV (GPS) RWY 36, Amdt 2B.
17-Sep-15	SD	Martin	Martin Muni	5/2018	08/03/15	GPS RWY 32, Orig-B.
17-Sep-15	MN	New Ulm	New Ulm Muni	5/2101	08/03/15	Takeoff Minimums and (Obstacle) DP, Orig.
17-Sep-15	TX	Waco	Waco Rgnl	5/2105	08/03/15	RNAV (GPS) RWY 1, Amdt 1B.
17-Sep-15	IN	Terre Haute	Terre Haute Intl-Hulman Field.	5/2162	08/03/15	ILS OR LOC RWY 5, Amdt 23.
17-Sep-15	IN	Brazil	Brazil Clay County	5/2188	07/28/15	RNAV (GPS) RWY 27, Orig.
17-Sep-15	WI	Madison	Dane County Rgnl-Truax Field.	5/2190	07/28/15	ILS OR LOC RWY 21, Orig-A.
17-Sep-15	NY	Schenectady	Schenectady County.	5/2346	07/29/15	RNAV (GPS) RWY 4, Orig-B.
17-Sep-15	NY	Poughkeepsie	Dutchess County	5/2660	07/30/15	RNAV (GPS) RWY 6, Orig-B.
17-Sep-15	NY	Poughkeepsie	Dutchess County	5/2661	07/30/15	VOR/DME RWY 6, Amdt 7A.
17-Sep-15	NY	Poughkeepsie	Dutchess County	5/2662	07/30/15	VOR/DME RWY 24, Amdt 4C.
17-Sep-15	NY	Poughkeepsie	Dutchess County	5/2663	07/30/15	VOR A, Amdt 11B.
17-Sep-15	NY	Poughkeepsie	Dutchess County	5/2664	07/30/15	RNAV (GPS) RWY 24, Orig-B.
17-Sep-15	PA	Ebensburg	Ebensburg	5/3210	08/03/15	VOR–A, Amdt 7.
17-Sep-15	PA	Ebensburg	Ebensburg	5/3211	08/03/15	Takeoff Minimums and (Obstacle) DP, Amdt 2.
17-Sep-15	MS	Meridian	Key Field	5/4237	08/04/15	ILS OR LOC RWY 19, Amdt 1B.
17-Sep-15	FL	Plant City	Plant City	5/4253	08/03/15	RNAV (GPS) RWY 28, Orig.
17-Sep-15	FL	Tallahassee	Tallahassee Intl	5/4488	08/03/15	ILS OR LOC/DME RWY 36, Amdt 25A.
17-Sep-15	FL	Tallahassee	Tallahassee Intl	5/4623	08/03/15	Takeoff Minimums and (Obstacle) DP, Amdt 1.
17-Sep-15	NY	Hudson	Columbia County	5/5214	08/04/15	NDB–A, Amdt 4A.
17-Sep-15	NY	Hudson	Columbia County	5/5216	08/04/15	RNAV (GPS) RWY 21, Orig-A.
17-Sep-15	NY	Hudson	Columbia County	5/5217	08/04/15	RNAV (GPS) RWY 3, Orig-A.
17-Sep-15	IA	Creston	Creston Muni	5/5547	07/27/15	RNAV (GPS) RWY 16, Amdt 1B.

AIRAC date	State	City	Airport	FDC No.	FDC date	Subject
17-Sep-15	GA	Rome	Richard B Russell Regional—J H Towers Field.	5/5576	07/29/15	ILS OR LOC/DME RWY 1, Orig-B.
17-Sep-15	MS	Grenada	Grenada Muni	5/6313	07/30/15	RNAV (GPS) RWY 31, Amdt 1.
17-Sep-15	MS	Grenada	Grenada Muni	5/6314	07/30/15	RNAV (GPS) RWY 4, Amdt 1.
17-Sep-15	MS	Grenada	Grenada Muni	5/6315	07/30/15	RNAV (GPS) RWY 22, Amdt 1.
17-Sep-15	KY	Covington	Cincinnati/Northern Kentucky Intl.	5/6647	08/04/15	ILS OR LOC RWY 18L, Amdt 7A.
17-Sep-15	MA	Stow	Minute Man Air Field.	5/6658	08/04/15	VOR/DME RWY 21, Amdt 3C.
17-Sep-15	NY	New York	John F Kennedy Intl.	5/7203	07/27/15	RNAV (RNP) Z RWY 22L, Amdt 1.
17-Sep-15	MI	Detroit	Detroit Metropolitan Wayne County.	5/7474	07/27/15	ILS PRM Y RWY 4L, Orig-D.
17-Sep-15	LA	Baton Rouge	Baton Rouge Metropolitan, Ryan Field.	5/7557	08/03/15	Takeoff Minimums and (Obstacle) DP, Amdt 1A.
17-Sep-15	SD	Sturgis	Sturgis Muni	5/8224	07/27/15	RNAV (GPS) RWY 29, Amdt 1A.
17-Sep-15	SD	Sturgis	Sturgis Muni	5/8225	07/27/15	RNAV (GPS) RWY 11, Amdt 1A.
17-Sep-15	MN	Minneapolis	Flying Cloud	5/8307	07/27/15	ILS OR LOC RWY 10R, Amdt 3B.
17-Sep-15	MN	Minneapolis	Flying Cloud	5/8308	07/27/15	RNAV (GPS) RWY 10L, Amdt 1B.
17-Sep-15	MN	Minneapolis	Flying Cloud	5/8313	07/27/15	RNAV (GPS) RWY 10R, Orig-A.
17-Sep-15	MN	Minneapolis	Flying Cloud	5/8314	07/27/15	RNAV (GPS) RWY 28L, Amdt 2A.
17-Sep-15	MN	Minneapolis	Flying Cloud	5/8315	07/27/15	RNAV (GPS) RWY 28R, Amdt 2C.
17-Sep-15	MN	Minneapolis	Flying Cloud	5/8316	07/27/15	VOR RWY 10R, Amdt 9A.
17-Sep-15	NE	Creighton	Creighton Muni	5/8346	07/27/15	RNAV (GPS) RWY 13, Orig-A.
17-Sep-15	NE	Creighton	Creighton Muni	5/8351	07/27/15	RNAV (GPS) RWY 31, Orig-A.
17-Sep-15	NE	Creighton	Creighton Muni	5/8356	07/27/15	Takeoff Minimums and (Obstacle) DP, Orig.
17-Sep-15	TN	Nashville	Nashville Intl	5/8382	08/05/15	RNAV (RNP) Z RWY 2C, Amdt 2.
17-Sep-15	TN	Nashville	Nashville Intl	5/8383	08/05/15	RNAV (RNP) Z RWY 2L, Amdt 2.
17-Sep-15	TN	Nashville	Nashville Intl	5/8386	08/05/15	RNAV (GPS) Y RWY 2R, Amdt 2A.
17-Sep-15	GA	Thomasville	Thomasville Rgnl	5/8603	07/29/15	RNAV (GPS) RWY 22, Orig.
17-Sep-15	TN	Rogersville	Hawkins County	5/8608	07/29/15	NDB RWY 7, Amdt 2.
17-Sep-15	TX	Fort Hood/Killeen	Robert Gray AAF	5/9354	08/03/15	ILS OR LOC RWY 15, Amdt 6.
17-Sep-15	TX	Fort Hood/Killeen	Robert Gray AAF	5/9355	08/03/15	VOR/DME RWY 15, Amdt 3.
17-Sep-15	TX	Fort Hood/Killeen	Robert Gray AAF	5/9356	08/03/15	NDB RWY 15, Amdt 6.
17-Sep-15	TX	Fort Hood/Killeen	Robert Gray AAF	5/9363	08/03/15	COPTER VOR RWY 33, Amdt 2A.
17-Sep-15	TX	Fort Hood/Killeen	Robert Gray AAF	5/9364	08/03/15	VOR–A, Amdt 2A.
17-Sep-15	TX	Fort Hood/Killeen	Robert Gray AAF	5/9365	08/03/15	RNAV (GPS) RWY 33, Amdt 1A.
17-Sep-15	TX	Fort Hood/Killeen	Robert Gray AAF	5/9366	08/03/15	RNAV (GPS) RWY 15, Amdt 1A.
17-Sep-15	TX	Fort Hood/Killeen	Robert Gray AAF	5/9367	08/03/15	ILS OR LOC RWY 33, Amdt 1A.

[FR Doc. 2015–22011 Filed 9–4–15; 8:45 am]

BILLING CODE 4910–13–P

DEPARTMENT OF STATE

22 CFR Part 22

[Public Notice: 9257]

RIN 1400–AD71

Schedule of Fees for Consular Services, Department of State and Overseas Embassies and Consulates—Passport and Citizenship Services Fee Changes

AGENCY: Department of State.

ACTION: Interim final rule with request for comment.

SUMMARY: The Department of State amends the Schedule of Fees for Consular Services (Schedule) for certain passport fees and citizenship services fees. More specifically, the rule amends the passport book application services fee and passport book security surcharge. The Department is adjusting these fees in light of the findings of the most recent annual update to the Cost of Service Model to ensure that the fees for consular services better align with the costs of providing those services. The passport fee changes will not alter the total fee paid by passport customers. The rule also renames the ''Administrative Processing of Formal Renunciation of U.S. Citizenship'' fee, as the ''Administrative Processing of Request for Certificate of Loss of Nationality'' fee, applying the fee to any request for a Certificate of Loss of Nationality whether the individual has relinquished nationality by taking an oath of renunciation or by voluntarily and intentionally performing another potentially expatriating act specified by statute.

DATES: Section 22.1, Items 2.(a), 2.(b), and 2.(g) of this rule become effective September 23, 2015. Section 22.1, Item 8 becomes effective November 9, 2015. Written comments must be received on or before November 9, 2015.

ADDRESSES: Interested parties may submit comments to the Department by any of the following methods:

- Visit the Regulations.gov Web site at: *http://www.regulations.gov* and search for the Regulatory Information Number (RIN) 1400–AD71 or docket number DOS–2014–0016.
- Mail (paper, disk, or CD–ROM): U.S. Department of State, Office of the Comptroller, Bureau of Consular Affairs (CA/C), SA–17 8th Floor, Washington, DC 20522–1707.
- Email: *fees@state.gov.* You must include the RIN (1400–AD71) in the subject line of your message.
- All comments should include the commenter's name, the organization the commenter represents, if applicable, and the commenter's address. If the Department is unable to read your comment for any reason, and cannot contact you for clarification, the Department may not be able to consider

your comment. After the conclusion of the comment period, the Department will publish a Final Rule (in which it will address relevant comments) as expeditiously as possible.

FOR FURTHER INFORMATION CONTACT: Jill Warning, Special Assistant, Office of the Comptroller, Bureau of Consular Affairs, Department of State; phone: 202–485–6681, telefax: 202–485–6826; email: *fees@state.gov.*

SUPPLEMENTARY INFORMATION:

Background

The rule makes changes to the Schedule of Fees for Consular Services of the Department of State's Bureau of Consular Affairs. The Department sets and collects its fees based on the concept of full cost recovery. The Department completed its most recent review of current consular fees and will implement several changes to the Schedule of Fees based on the costs of services calculated by the Fiscal Year 2013 update to the Cost of Service Model.

What is the authority for this action?

The Department of State derives the general authority to set fees based on the cost of the consular services it provides, and to charge those fees, from the general user charges statute, 31 U.S.C. 9701. *See, e.g.,* 31 U.S.C. 9701(b)(2)(A) (''The head of each agency . . . may prescribe regulations establishing the charge for a service or thing of value provided by the agency . . . based on . . . the costs to the government.''). As implemented through Executive Order 10718 of June 27, 1957, 22 U.S.C. 4219 further authorizes the Department to establish fees to be charged for official services provided by U.S. embassies and consulates. Other authorities allow the Department to charge fees for consular services, but not to determine the amount of such fees because the amount is statutorily determined.

Several statutes address specific fees relating to passports. For instance, 22 U.S.C. 214 authorizes the Secretary of State to set the passport application fee by regulation. In addition, another statute authorizes the Department to collect and retain a surcharge on passports to help pay for efforts to enhance border security. See 8 U.S.C. 1714. Although this passport surcharge was originally frozen statutorily at $12, subsequent legislation authorized the Department to amend this surcharge administratively, provided, among other things, that the resulting surcharge is ''reasonably related to the costs of providing services in connection with the activity or item for which the surcharges are charged.'' Public Law 109–472, 6, 120 Stat. 3554, reproduced at 8 U.S.C. 1714 (note).

Certain people are exempted by law or regulation from paying specific fees. These are noted in the Schedule of Fees. They include, for instance, exemptions from the passport execution and application fees for officers or employees of the United States government proceeding abroad in the discharge of official duties. *See* 22 U.S.C. 214; 22 CFR 51.52(b).

Although the funds collected for many consular fees must be deposited into the general fund of the Treasury pursuant to 31 U.S.C. 3302(b), various statutes permit the Department to retain some or all of the fee revenue it collects. For example, the Department retains the immigrant visa and passport security surcharges, *see* 8 U.S.C. 1714, but the portion of the passport application fee not related to the Western Hemisphere Travel Initiative is deposited into the general fund of the Treasury.

The Department last changed fees for passport services in an interim final rule dated June 28, 2010. *See* Department of State Schedule of Fees for Consular Services, Department of State and Overseas Embassies and Consulates, 22 CFR part 22 (75 FR 36522). Those changes to the Schedule went into effect July 13, 2010. A final rule regarding those fees was published on February 2, 2012 (77 FR 5177). The Department last changed fees for visa and citizenship services in an interim final rule dated August 28, 2014. *See* Schedule of Fees for Consular Services, Department of State and Overseas Embassies and Consulates—Visa and Citizenship Services Fee Changes, 22 CFR part 22 (79 FR 51247). That change to the Schedule went into effect on September 12, 2014. A final rule regarding those fees was published on August 25, 2015 (80 FR 51464).

Some fees in the Schedule, including Items 20(a) and (b), 31(a) and (b) and 35(c), are set by the Department of Homeland Security (DHS). These DHS fees were most recently updated by that agency on November 23, 2010, and are subject to change in the future. *See* 75 FR 58962. The Department lists these DHS fees in the Department Schedule of Fees for cashiering purposes only. The Department has no authority to set DHS fees, which are listed at 8 CFR 103.7(b)(1).

Why is the department adjusting certain passport and citizenship services fees at this time?

Consistent with OMB Circular A–25 guidelines, the Department recently completed a fee review using its Cost of Service Model. This review was conducted from September 2013 through May 2014 and provides the basis for updating the Schedule. The results of that review are outlined in this rule.[1] While fees are set in accordance with full cost recovery, there are limited circumstances, such as the passport book and card application fees for minors, in which costs are allocated to related fees or the Department charges a fee that is lower than the cost of providing the service. This may be done in order to account for statutory requirements or the potential impact on the public of setting those fees at a higher level. See 31 U.S.C. 9701(b)(2) (user charges based on costs to the government, the value of the service to the recipient, the public policy or interest served, and other relevant facts).

Similar to the 2012 fee review, upon which the current Schedule is based, costs are generated by an activity-based costing model that takes into account all costs to the U.S. government. Unlike a typical accounting system, which accounts for only traditional general-ledger-type costs such as salaries, supplies, travel and other business expenses, activity-based costing (ABC) models measure the costs of activities, or processes, and then provide an additional view of costs by the products and services produced by an organization through the identification of the key cost drivers of the activities. Below is a description of activity-based costing excerpted from the Supplemental Notice of Proposed Rulemaking published on March 24, 2010 (75 FR 14111).

Activity-Based Costing Generally

OMB Circular A–25 states that it is the objective of the United States Government to ''(a) ensure that each service, sale, or use of Government goods or resources provided by an agency to specific recipients be self-sustaining; [and] (b) promote efficient allocation of the Nation's resources by establishing charges for special benefits provided to the recipient that are at least as great as costs to the Government of providing the special benefits . . .'' OMB Circular A–25, 5(a)–(b); see also 31 U.S.C. 9701(b)(2)(A) (agency ''may prescribe regulations establishing the charge for a service or thing of value provided by the agency . . . based on . . . the costs to the Government . . .''). To set prices that are ''self-sustaining,'' the Department must determine the full cost of providing consular services.

[1] To request more information about the Cost of Service model, please send your request using one of the methods in the Addresses section above.

Following guidance provided in Statement 4 of OMB's Statement of Federal Financial Accounting Standards (SFFAS), available at *http://www.fasab.gov/pdffiles/sffas-4.pdf,* the Department chose to develop and use an activity-based costing (ABC) model to determine the full cost of the services listed in its Schedule of Fees, both those whose fee the Department proposes to change, and those whose fee will remain unchanged from prior years. The Department refers to the specific ABC model that underpins the proposed fees as the ''Cost of Service Model'' or ''CoSM.''

The Government Accountability Office (GAO) defines activity-based costing as a ''set of accounting methods used to identify and describe costs and required resources for activities within processes.'' Because an organization can use the same staff and resources (computer equipment, production facilities, etc.) to produce multiple products or services, ABC models seek to precisely identify and assign costs to processes and activities and then to individual products and services through the identification of key cost drivers referred to as ''resource drivers'' and ''activity drivers.''

Example: Imagine a government agency that has a single facility it uses to prepare and issue a single product—a driver's license. In this simple scenario, every cost associated with that facility (the salaries of employees, the electricity to power the computer terminals, the cost of a blank driver's license, etc.) can be attributed directly to the cost of producing that single item. If that agency wants to ensure that it is charging a ''self-sustaining'' price for driver's licenses, it only has to divide its total costs for a given time period by an estimate of the number of driver's licenses to be produced during that same time period.

However, if that agency issues multiple products (driver's licenses, non-driver ID cards, etc.), has employees that work on other activities besides licenses (for example, accepting payment for traffic tickets), and operates out of multiple facilities it shares with other agencies, it becomes much more complex for the agency to determine exactly how much it costs to produce any single product. In those instances, the agency would need to know what percent of time its employees spend on each service and how much of its overhead (rent, utilities, facilities maintenance, etc.) can be allocated to the delivery of each service to determine the cost of producing each of its various products—the driver's license, the non-driver ID card, etc. Using an ABC model allows the agency to identify separate costs for those different services.

Components of Activity-Based Costing

As noted in SFFAS Statement 4, ''activity-based costing has gained broad acceptance by manufacturing and service industries as an effective managerial tool'' (SFFAS Statement 4, 147). There are no ''off-the-shelf'' ABC models that allow the Department (or any other entity) to simply populate a few data points and generate an answer. ABC models require financial and accounting analysis and modeling skills combined with a detailed understanding of all the organization's business processes, which, in an entity the size of the Department's Bureau of Consular Affairs, are exceedingly complex. More specifically, ABC models require an organization to:

- Identify all of the activities that are required to produce a particular product or service (''activities'');
- Identify all of the resources allocated to the production of (costs) that product or service (''resources'');
- Measure the quantity of resources consumed (''resource driver''); and
- Measure the frequency and intensity of demand placed on activities to produce services (''activity driver'').

For additional details on an activity-based costing model, see the Supplemental Notice of Proposed Rulemaking published on March 24, 2010 (75 FR 14111).

Although much of the modeling methodology has remained the same between fee reviews, the methodology for capturing the Department's historical support costs and projected costs has been revised to reflect the change in the Department's workload. In order to accurately account for the costs associated with growing demand for consular services, the current fee review also incorporates two years of projected costs in addition to two years of historical costs and one year of current costs. The new fees represent a weighted average of the annual costs by service for fiscal years 2011 through 2015. Costs for individual fiscal years were weighted by the projected workload volume for that year. These weighted costs by fiscal year were then added together to generate a single cost per service upon which the fees are determined.

Passport Book Application Services

The Department is decreasing the application fee for an adult (age 16 and older) passport book from $70 to $50, and the application fee for a minor (under age 16) passport book from $40 to $20. These changes apply to all applicants except those persons who are statutorily exempted from paying fees. The reduction in the passport application fee (and corresponding increase in the passport security surcharge noted below) will result in a reduction of funds deposited in the general fund at the Treasury and an increase in the revenue retained by the Department of State. The passport fee changes will not alter the total fee paid by passport customers.

Since the passport book application services fee was last changed in 2010, the Department has enhanced its Cost of Service Model to more accurately identify which costs should be attributed to the application fee and which should be attributed to the passport security surcharge. The application fee includes all costs of passport issuance and use that are not included in the passport security surcharge, such as the cost of providing emergency services for American citizens overseas and the cost of collecting passport fees and initial data entry through a lockbox service. The 2013 Cost of Service Model reflected that these costs were lower than the previous fee of $70 (including the ''WHTI surcharge'' described below) and thus the Department is lowering the fee to more precisely reflect these costs.

Because a minor passport book has a validity of just five years, in contrast with the ten-year validity period of an adult passport book, the Department charges a lower, below-cost fee for minor passport books and allocates the remainder of the cost of processing minor passport book applications to the adult passport application fee. The Department is also decreasing the minor passport book application fee by $20.

As described in 22 CFR 51.51(d), the passport application services fee incorporates a surcharge (the ''Western Hemisphere Travel Initiative surcharge'' or ''WHTI surcharge'') to recover the costs of meeting the increased demand for passports as a result of actions taken to comply with section 7209(b) of Pub. L. 108–458 (reproduced at 8 U.S.C. 1185 note) (''WHTI''). The 2013 Cost of Service Model revealed that there has been no change in the costs attributable to WHTI and thus the surcharge remains $22 for adults. This surcharge is embedded within the passport book application services fee and not charged separately or separately itemized in the Schedule of Fees, see 22 CFR 51.51(d) (noting absence of separate itemization). This portion of the application fee has decreased from $22 to $20 for minors to allow the Department to keep the overall passport application fee for minors (including the security

surcharge, below) at $80, a reduced fee. The Department may charge reduced fees in order to account for statutory requirements or the potential impact on the public of setting those fees at a higher level. See 31 U.S.C. 9701(b)(2) (user charges based on costs to the government, the value of the service to the recipient, the public policy or interest served, and other relevant facts).

Passport Security Surcharge

The Department is increasing the passport security surcharge, which is applicable to all applicants except those persons who are statutorily exempted from paying fees, from $40 to $60. The passport security surcharge includes costs associated with the passport application processing fee that support enhanced border security, such as the secure book and card materials, passport printers, and compensation associated with passport adjudication, including fraud prevention. The 2013 Cost of Service Model results indicated that these costs amount to approximately $60 per passport. This change will result in a reduction of revenue deposited in the general fund of the Treasury and increase the revenue retained by the Department of State. This fee increase is due in part to new technology and more secure passport materials since 2010. *See* 8 U.S.C. 1714 and Public Law 109–472, 120 Stat. 3554, reproduced at 8 U.S.C. 1714 note.

Documentation for Loss of Nationality

The Department is expanding the application of and renaming item 8 in the Schedule of Fees to ''Administrative Processing of Request for Certificate of Loss of Nationality.'' The fee will be applied to cover not only services to U.S. nationals (*i.e.,* U.S. citizens and non-citizen nationals) who relinquish nationality by taking the oath of renunciation under 8 U.S.C. 1481(a)(5), but also to cover services to U.S. nationals who relinquish nationality under 8 U.S.C. 1481(a)(1) to 1481(a)(4) or any earlier-in-time relinquishment statutes administered by the Department of State and request a Certificate of Loss of Nationality. Currently, the fee is paid by those taking the oath of renunciation under 8 U.S.C. 1481(a)(5) at the time the oath is sworn. The fee would be collected from an individual claiming to have relinquished nationality at the time that person requests the Certificate of Loss of Nationality (that is, after completing Form DS–4079 and signing before a consular officer Part II of Form DS–4079 entitled ''Statement of Voluntary Relinquishment of U.S. Citizenship''). The Fiscal Year 2012 Cost of Service Model update demonstrated that documenting a U.S. national's relinquishment of nationality is extremely costly whether the service is for a relinquishment under 8 U.S.C. 1481(a)(1) to 1481(a)(4) or a relinquishment by renunciation under 8 U.S.C. 1481(a)(5). Both require American consular officers overseas to spend substantial amounts of time to accept, process, and adjudicate cases. The cost of the service is not limited to the time consular officers spend with individuals prior to and at appointments. The application is reviewed both overseas and domestically to ensure full compliance with the law. The consular officer must determine that the individual is indeed a U.S. national, advise the individual on the consequences of loss of nationality, and ensure that the individual fully understands the consequences of loss, including the inability to reside in the United States unless properly documented as an alien. Through documentary review, consideration of the individual's circumstances, and careful interviewing, the consular officer also must determine whether the individual is seeking loss of nationality voluntarily and with the requisite intent, as required by U.S. Supreme Court case law and by statute (8 U.S.C. 1481). This determination can be especially demanding in the case of minors or individuals with a developmental disability or mental illness.

The consular officer must also ensure that the commission of an expatriating act was as prescribed by statute, which is often an issue in non-renunciation relinquishment cases. The loss of nationality service must be documented on several forms and in consular systems as well as in a memorandum from the consular officer to the Department's Directorate of Overseas Citizens Services in Washington, DC (''OCS''), in the Bureau of Consular Affairs. All forms and memoranda are closely reviewed in OCS by a country officer and a senior approving officer, and may include consultation with legal advisers. This review entails close examination of whether the requirements of voluntariness and intent are satisfied in the individual case. Some applications require multiple rounds of correspondence between post and the Department. The final approval of the loss of nationality must be done by law within the Department (8 U.S.C. 1501), by OCS, after which the case is returned to the consular officer overseas for final delivery of the Certificate of Loss of Nationality to the individual. In addition, every individual issued a Certificate of Loss of Nationality is advised of the possibility of seeking a future Administrative Review of the loss of nationality, a time-consuming process that is conducted by OCS's Office of Legal Affairs.

Currently, nationals who renounce nationality pay a fee of $2,350, while nationals who apply for documentation of relinquishment of nationality by the voluntary commission of an expatriating act with the intention to lose nationality, do not pay a fee. However the services performed in both situations are similar, requiring close and detailed case-by-case review of the factors involved in a request for a Certificate of Loss of Nationality, and both result in similar costs to the Department.

In the past, individuals seldom requested Certificates of Loss of Nationality from the Department to document relinquishment. Although the Department was aware that an individual relinquishment service was among the most time consuming of consular services, it was rarely performed so the overall cost to the Department was low and the Department did not establish a fee. Requests for a Certificate of Loss of Nationality on the basis of a non-renunciatory relinquishment have increased significantly in recent years, and the Department expects the number to grow in the future, causing the total cost of this service to increase. At the same time, the Department funds consular services completely from user fees. The Cost of Service Model continues to demonstrate that such costs are incurred by the Department when accepting, processing, and adjudicating relinquishment of nationality cases; therefore, the Department will collect a fee from all individuals seeking a Certificate of Loss of Nationality. Taking into account the costs of both renunciation and non-renunciation relinquishment processes, the fee will be $2,350.

Regulatory Findings

Administrative Procedure Act

The Department is publishing this rule as an interim final rule with request for comment, with a 60-day provision for post-promulgation comments and with an effective date for § 22.1, Items 2.(a), 2.(b), and 2.(g) of less than 30 days from the date of publication, based on the ''good cause'' exception set forth at 5 U.S.C. 553(b)(3)(B) and 553(d)(3). Delaying implementation of this rule would be contrary to the public interest because consular services are directly

funded by user fees, not by appropriated funds. Each day that the Department is not collecting adequate user fees, services provided by the Department to citizens, nationals, and other customers worldwide suffer an immediate degradation. For example, the passport security surcharge change will provide approximately $1,000,000 per day to continue timely and secure passport services in a sustainable manner. There is no backup source of funds for consular services. Therefore, the Department finds that the delay involved in publishing this rule for notice and comment would cause immediate harm to the ability of the Department to provide these services.

Regulatory Flexibility Act

The Department has reviewed this rule and, by approving it, certifies that it will not have a significant economic impact on a substantial number of small entities as defined in 5 U.S.C. 601(6).

Unfunded Mandates Act of 1995

This rule will not result in the expenditure by state, local, and tribal governments, in the aggregate, or by the private sector, of $100 million or more in any year, and it will not significantly or uniquely affect small governments. Therefore, no actions were deemed necessary under the provisions of the Unfunded Mandates Reform Act of 1995, 2 U.S.C. 1501–1504.

Small Business Regulatory Enforcement Fairness Act of 1996

This rule is not a major rule as defined by 5 U.S.C. 804(2).

Executive Orders 12866 and 13563

The Department has reviewed this rule to ensure its consistency with the regulatory philosophy and principles set forth in the Executive Orders. This rule has been submitted to OMB for review.

This rule is necessary in light of the Department of State's Fiscal Year 2013 update to the Cost of Service Model finding that the cost of processing passports has changed since those fees were last amended in 2010. The Department is setting the new fees in accordance with 31 U.S.C. 9701 and other applicable legal authorities, as described in detail above. *See, e.g.,* 31 U.S.C. 9701(b)(2)(A) (''The head of each agency . . . may prescribe regulations establishing the charge for a service or thing of value provided by the agency . . . based on . . . the costs to the government.''). This regulation sets the fees for consular services at the amount required to recover the costs associated with providing that service.

Details of the fee changes are as follows:

Item No.	New fee	Current fee	Change in fee	Percentage increase	Estimated annual number of applications [1]	Estimated change in annual fees collected [2]
SCHEDULE OF FEES FOR CONSULAR SERVICES						
*	*	*	*	*	*	*
PASSPORT AND CITIZENSHIP SERVICES						
2. Passport Book Application Services for: [3]						
(a) Applicants age 16 or over (including renewals)	$50	$70	−$20	−29	10,840,438	−$216,808,760
(b) Applicants under age 16	20	40	−20	−50	2,276,122	−$45,522,440
(g) Passport book security surcharge (enhanced border security fee)	60	40	20	50	13,116,560	$262,331,200
8. Administrative Processing of Request for Certificate of Loss of Nationality [4]						
(a.) Oath of renunciation	2,350	2,350	0	0	5,986	0
(b.) Relinquishment	2,350	0	2,350	N/A	559	$1,313,650
Total						$1,313,650
*	*	*	*	*	*	*

[1] Based on projected FY 2015 workload.
[2] Based on projected FY 2015 workload.
[3] The shift of $20 between the passport application fee and the passport security surcharge will result in a reduction in funds deposited in the general fund of the Treasury and an increase in the funds retained by State.
[4] The existing fee definition covers a projected 5,986 applicants renouncing their U.S. nationality in FY 2015. This rule expands the definition of the fee to cover an additional projected 559 applicants who will relinquish their nationality in FY 2015. The total volume of applicants paying this fee is projected to be 6,545, if in effect for all of FY 2015.

Executive Orders 12372 and 13132

This regulation will not have substantial direct effects on the states, on the relationship between the national government and the states, or on the distribution of power and responsibilities among the various levels of government. Therefore, in accordance with section 6 of Executive Order 13132, it is determined that this rule does not have sufficient federalism implications to require consultations or warrant the preparation of a federalism summary impact statement. The regulations implementing Executive Order 12372 regarding intergovernmental consultation on

federal programs and activities do not apply to this regulation.

Executive Order 13175

The Department has determined that this rulemaking will not have tribal implications, will not impose substantial direct compliance costs on Indian tribal governments, and will not preempt tribal law. Accordingly, the requirements of Executive Order 13175 do not apply to this rulemaking.

Paperwork Reduction Act

This rule does not impose any new reporting or record-keeping requirements subject to the Paperwork Reduction Act.

List of Subjects in 22 CFR Part 22

Consular services, Fees, Passports.

Accordingly, for the reasons stated in the preamble, 22 CFR part 22 is amended as follows:

PART 22—SCHEDULE OF FEES FOR CONSULAR SERVICES—DEPARTMENT OF STATE AND FOREIGN SERVICE

■ 1. The authority citation for part 22 continues to read as follows:

Authority: 8 U.S.C. 1101 note, 1153 note, 1183a note, 1351, 1351 note, 1714, 1714 note; 10 U.S.C. 2602(c); 11 U.S.C. 1157 note; 22 U.S.C. 214, 214 note, 1475e, 2504(a), 4201, 4206, 4215, 4219, 6551; 31 U.S.C. 9701; Exec. Order 10,718, 22 FR 4632 (1957); Exec. Order 11,295, 31 FR 10603 (1966).

■ 2. Section 22.1 is amended by:

■ a. Revising Items 2.(a), (b), and (g), effective September 23, 2015; and

■ b. Revising Item 8, effective November 9, 2015.

The revisions read as follows:

§ 22.1 Schedule of fees.

* * * * *

SCHEDULE OF FEES FOR CONSULAR SERVICES

Item No.	Fee
PASSPORT AND CITIZENSHIP SERVICES	
* * * * * * *	
2. Passport Book Application Services for:	
(a) Applicants age 16 or over (including renewals)	50
(b) Applicants under age 16	20
* * * * * * *	
(g) Passport book security surcharge (enhanced border security fee)	60
* * * * * * *	
8. Administrative Processing of Request for Certificate of Loss of Nationality	2,350
* * * * * * *	

Dated: August 28, 2015.

Patrick F. Kennedy,

Under Secretary of State for Management, U.S. Department of State.

[FR Doc. 2015–22054 Filed 9–4–15; 8:45 am]

BILLING CODE 4710–06–P

DEPARTMENT OF HOUSING AND URBAN DEVELOPMENT

24 CFR Part 960

[Docket No. FR 5743–I–02]

RIN 2577–AC94

Streamlining Administrative Regulations for Public Housing: Revisions to Public Housing Flat Rents

AGENCY: Office of the Assistant Secretary for Public and Indian Housing, HUD.

ACTION: Interim rule.

SUMMARY: Section 238 of the Department of Housing and Urban Development Appropriations Act, 2015 (2015 Appropriations Act) amended the requirements in the United States Housing Act of 1937 (1937 Act) for public housing agencies (PHAs) to set flat rents in public housing. These requirements were previously amended by Department of Housing and Urban Development Appropriations Act, 2014 (2014 Appropriations Act). This interim rule amends HUD regulations implementing the Fiscal Year (FY) 2014 statutory language regarding public housing flat rents to allow PHAs to take advantage of the FY 2015 authority that provides PHAs with more flexibility in setting flat rents. This interim rule supersedes the portion of a proposed rule issued by HUD earlier this year that addressed the issue of setting flat rents in public housing, and HUD continues to seek comment on this issue.

DATES: *Effective Date:* October 8, 2015.

Comment Due Date: November 9, 2015.

ADDRESSES: Interested persons are invited to submit comments regarding this interim rule. All communications must refer to the above docket number and title. There are two methods for submitting public comments.

1. Submission of Comments by Mail. Comments may be submitted by mail to the Regulations Division, Office of General Counsel, Department of Housing and Urban Development, 451 7th Street SW., Room 10276, Washington, DC 20410–0500.

2. Electronic Submission of Comments. Interested persons may submit comments electronically through the Federal eRulemaking Portal at *www.regulations.gov.* HUD strongly encourages commenters to submit comments electronically. Electronic submission of comments allows the commenter maximum time to prepare and submit a comment, ensures timely receipt by HUD, and enables HUD to make comments immediately available to the public. Comments submitted electronically through the *www.regulations.gov* Web site can be viewed by other commenters and interested members of the public. Commenters should follow the instructions provided on that site to submit comments electronically.

Note: To receive consideration as public comments, comments must be submitted through one of the two methods specified above. Again, all submissions must refer to the docket number and title of the rule.

No Facsimile Comments. Facsimile (fax) comments are not acceptable.

Public Inspection of Public Comments. All properly submitted comments and communications submitted to HUD will be available for public inspection and copying between

8 a.m. and 5 p.m., weekdays, at the above address. Due to security measures at the HUD Headquarters building, an advance appointment to review the public comments must be scheduled by calling the Regulations Division at 202–708–3055 (this is not a toll-free number). Individuals with speech or hearing impairments may access this number via TTY by calling the Federal Relay Service at 800–877–8339 (this is a toll-free number). Copies of all comments submitted are available for inspection and downloading at *www.regulations.gov.*

FOR FURTHER INFORMATION CONTACT: Todd Thomas, Program Analyst, Public Housing Management and Occupancy Division, Office of Public and Indian Housing, Department of Housing and Urban Development, 40 Marietta Street NW., Atlanta, GA 30303, telephone (678) 732–2056 (this is not a toll-free number) or at *Todd.C.Thomas@HUD.gov.*

SUPPLEMENTARY INFORMATION:

I. Background

Section 3(a)(2)(B) of the 1937 Act (42 U.S.C. 1437a(a)(2)(B)) requires PHAs to set a flat rental amount for each public housing unit. In the 2014 Appropriations Act,[1] this amount was statutorily set at no less than 80 percent of the applicable fair market rent (FMR), as determined by HUD under section 8(c) of the 1937 Act (42 U.S.C. 1437f(c)). In the event that implementation of this requirement would increase a family's rental payment by more than 35 percent a year, the PHA must phase in the flat rent as necessary to avoid such result. The 2014 Appropriations Act required HUD to implement this change by notice, and to begin the rulemaking process necessary to amend the corresponding regulations. HUD implemented the 2014 statutory change by notice issued on May 19, 2014 [2] and commenced rulemaking on January 6, 2015, at 80 FR 423.[3]

In the 2015 Appropriations Act,[4] section 3 of the 1937 Act was amended again to allow for additional flexibility to the requirement that the flat rental amount be set at no less than 80 percent of the applicable FMR, as established under 8(c) of the 1937 Act. HUD may allow a PHA to establish a flat rent based on an FMR that is based on an area geographically smaller than would otherwise be used, if HUD determines that the resulting FMR more accurately reflects local market conditions. In addition, a PHA may apply to HUD for an exception allowing a flat rental amount that is lower than the amount otherwise determined under the two allowable FMRs, if HUD determines that the two FMRs do not reflect the market value of the property and the lower flat rental amount is based on a market analysis of the applicable market. In either case, the alternative flat rent must not create a disincentive for families seeking to become economically self-sufficient to continue to reside in public housing.

In addition to providing additional flexibility to the 80 percent of an applicable FMR and allowing PHAs to apply for an exception, the 2015 Appropriations Act struck the statutory language requiring flat rents to be based on the rental value of the unit and the language requiring PHAs to comply with the statutory provisions by June 1, 2014.

HUD's January 6, 2015 rule proposed regulatory changes to conform to several statutory changes made to the 1937 Act that were designed to streamline and ease the burden of administrative requirements, imposed primarily on PHAs but also on multifamily housing owners administering programs and certain HUD Multifamily Housing and HUD Community Planning and Development programs. The January 6, 2015, proposed rule addresses a variety of administrative requirements, including verification of Social Security numbers, annual reexamination for families on fixed incomes, utility reimbursements, and the Earned Income Disregard used in several HUD programs. That proposed rule also included changes to 24 CFR 960.253(b), the regulations addressing public housing flat rents,[5] and proposed to codify the changes already implemented for flat rents by PIH Notice 2014–12.

This interim rule replaces only the proposed changes with respect to flat rents in § 960.253(b); the changes proposed in January for other portions of § 960.253 remain in place, and are not effective until HUD issues a final rule that addresses all the regulatory changes proposed by HUD on January 6, 2015. HUD intends to issue a single final rule that takes into consideration all public comments received on both the January 6, 2015, proposed rule and this interim rule.

II. This Interim Rule—Summary of Changes

This interim rule, consistent with statutory authority and the notice implementing the changes in the 2014 Appropriations Act, establishes a standard flat rent amount at not less than 80 percent of the applicable FMR for a given unit.

However, the 2015 Appropriations Act allowed PHAs flexibility when establishing flat rents if 80 percent of the applicable FMR did not reflect the market value of a unit.[6] This interim rule amends 24 CFR 960.253(b)(2) to provide PHAs additional flexibility when setting flat rents using a HUD-determined FMR. First, this interim rule provides that HUD may permit a flat rental amount based on either 80 percent of the applicable FMR, or an FMR that more accurately reflects local market conditions and is based on an area geographically smaller than the one that would otherwise be used. This second FMR would be either the Small Area FMR (SAFMR), issued for metropolitan counties, or the unadjusted rents, for counties not covered by an SAFMR, or any successor fair market rental determination. If neither a SAFMR nor an unadjusted rent has been determined for an area, PHAs must set flat rents based on the applicable FMR for the larger area. Second, this interim rule provides that the PHA may submit to HUD a request for an exception to use a flat rental amount that is lower than the amount allowed under the two FMRs. This request, if made, must include a market analysis and a demonstration that the proposed lower flat rental amount is based on a market analysis of the applicable market and is reasonable in comparison to other comparable unassisted units.

While the new statutory authority grants PHAs additional flexibility in establishing flat rents, PHAs are not required to exercise such flexibility. PHAs may opt to continue to implement flat rents equal to not less than 80 percent of the applicable FMR, as determined under 8(c) of the 1937 Act. Some PHAs may want to wait for the conclusion of public comment and the final rule before taking advantage of the new authority, and HUD understands and supports this position.

[1] Title II of Division L of the Consolidated Appropriations Act, 2014, Public Law 113–76, approved January 17, 2014.

[2] See Notice PIH 2014–12 at *http://portal.hud.gov/hudportal/documents/huddoc?id=pih2014-12.pdf.*

[3] See *http://www.gpo.gov/fdsys/pkg/FR-2015-01-06/pdf/2014-30504.pdf.*

[4] Title II of Division K of the Consolidated and Further Continuing Appropriations Act, 2015, Public Law 113–235, approved December 16, 2014.

[5] See the discussion of flat rents in the preamble of the January 6, 2015, proposed rule at 80 FR 426, and the proposed regulatory changes at 80 FR 432–432.

[6] See, for example, the description of section 238 in the attached overview of the 2015 Appropriations Act by the Council of Large Public Housing Authorities, at *http://www.clpha.org/articledetail/?aid=645.*

However, consistent with the 2014 Appropriations Act and the implementing PIH Notice 2014–12, PHAs are required to adjust flat rents downward to account for tenant-paid utilities and to revise flat rents within 90 days of HUD's issuance of new FMRs. In addition, the family's rent must not increase by more than 35 percent in a single year as a result of the new flat rent rules.

Finally, this interim rule removes language requiring documentation on the part of the PHA regarding the PHA's methods of determining a unit's flat rent, as the process setting flat rents is now less reliant upon discretionary actions by the PHA, except in the case of exception requests, which require documentation provided by PHAs.

III. Justification for Interim Rulemaking

In general, HUD publishes rules for advance public comment in accordance with its rule on rulemaking at 24 CFR part 10. However, under 24 CFR 10.1, HUD may omit prior public notice and comment if it is ''impracticable, unnecessary, or contrary to the public interest.'' Under such circumstances, HUD may publish an interim rule without soliciting public comment. In this instance, HUD has determined that it is unnecessary to delay the effectiveness of this rule for advance public comment.

First, section 238 of the 2015 Appropriations Act is effective immediately and introduces statutory changes intended to provide relief to PHAs and tenants burdened by the current statute. This interim rule implements those statutory changes.

Second, while the interim rule does exercise some discretion on the part of HUD, the exercise is minimal and generally relies on the PHA requesting action by HUD to initiate the action. HUD is not mandating that PHAs use the flexibility authorized by the new statutory language, but is rather allowing PHAs the option to utilize the new authority if they so choose. PHAs may elect to continue to establish flat rents in accordance with the changes allowed under the 2014 Appropriations Act. Given that many PHAs want to use the new authority, this interim rule strikes the right balance of allowing them to implement this new authority but not requiring them to do so.

Finally, although HUD has determined that good cause exists to publish this rule for effect without prior solicitation of public comment, HUD recognizes the value and importance of public input in the rulemaking process. Accordingly, HUD is issuing these regulatory amendments on an interim basis and providing a 60-day public comment period.

IV. Findings and Certifications

Regulatory Planning and Review

The Office of Management and Budget (OMB) reviewed this rule under Executive Order 12866, ''Regulatory Planning and Review.'' This rule was determined to be a ''significant regulatory action,'' as defined in section 3(f) of the order (although not an economically significant regulatory action under the order). The docket file is available for public inspection in the Regulations Division, Office of the General Counsel, 451 7th Street SW., Room 10276, Washington, DC 20410–0500. Due to security measures at the HUD Headquarters building, please schedule an appointment to review the docket file by calling the Regulations Division at 202–708–3055 (this is not a toll-free number). Individuals with speech or hearing impairments may access this number via TTY by calling the Federal Information Relay Service at 800–877–8339 (this is a toll-free number).

Information Collection Requirements

The information collection requirements contained in this interim rule have been submitted to the Office of Management and Budget (OMB) under the Paperwork Reduction Act of 1995 (44 U.S.C. 3501–3520) and assigned OMB control numbers 2577–0220 and –0169. In accordance with the Paperwork Reduction Act, an agency may not conduct or sponsor, and a person is not required to respond to, a collection of information, unless the collection displays a currently valid OMB control number.

Unfunded Mandates Reform Act

Title II of the Unfunded Mandates Reform Act of 1995 (UMRA) establishes requirements for Federal agencies to assess the effects of their regulatory actions on State, local, and tribal governments and the private sector. This interim rule will not impose any Federal mandates on any State, local, or tribal governments or the private sector within the meaning of UMRA.

Environmental Review

A Finding of No Significant Impact (FONSI) with respect to the environment was made in accordance with HUD regulations in 24 CFR part 50, which implement section 102(2)(C) of the National Environmental Policy Act of 1969 (42 U.S.C. 4332(2)(C)), in connection with HUD's publication of the Streamlining Administrative Regulations proposed rule, published on January 6, 2015, at 80 FR 423. That FONSI remains applicable to this interim rule, and is available for public inspection during regular business hours in the Regulations Division, Office of General Counsel, Department of Housing and Urban Development, 451 Seventh Street SW., Room 10276, Washington, DC 20410–0500. Due to security measures at the HUD Headquarters building, please schedule an appointment to review the FONSI by calling the Regulations Division at 202–708–3055 (this is not a toll-free number). Individuals with speech or hearing impairments may access this number via TTY by calling the Federal Relay Service at 800–877–8339 (this is a toll-free number).

Impact on Small Entities

The Regulatory Flexibility Act (RFA) (5 U.S.C. 601 *et seq.*) generally requires an agency to conduct a regulatory flexibility analysis of any rule subject to notice and comment rulemaking requirements, unless the agency certifies that the rule will not have a significant economic impact on a substantial number of small entities. This interim rule reduces administrative burdens on PHAs in many aspects of administering public housing. All PHAs, regardless of size, will benefit from the burden reduction made by this interim rule. These revisions impose no significant economic impact on a substantial number of small entities. Therefore, the undersigned certifies that this interim rule will not have a significant impact on a substantial number of small entities.

Notwithstanding HUD's belief that this interim rule will not have a significant effect on a substantial number of small entities, HUD specifically invites comments regarding any less burdensome alternatives to this interim rule that will meet HUD's objectives as described in this preamble.

Executive Order 13132, Federalism

Executive Order 13132 (entitled ''Federalism'') prohibits an agency from publishing any rule that has federalism implications if the rule either imposes substantial direct compliance costs on State and local governments and is not required by statute or the rule preempts State law, unless the agency meets the consultation and funding requirements of section 6 of the Executive order. This interim rule does not have federalism implications and does not impose substantial direct compliance costs on State and local governments nor preempt State law within the meaning of the Executive order.

Catalog of Federal Domestic Assistance

The Catalog of Federal Domestic Assistance number for the Public Housing program is 14.872.

List of Subjects for 24 CFR Part 960

Aged, Grant programs—housing and community development, Individuals with disabilities, Pets, Public housing.

Accordingly, for the reasons stated in the preamble, HUD amends 24 CFR part 960 as follows:

PART 960—ADMISSION TO, AND OCCUPANCY OF, PUBLIC HOUSING

■ 1. The authority citation for 24 CFR part 960 continues to read as follows:

Authority: 42 U.S.C. 1437a, 1437c, 1437d, 1437n, 1437z–3, and 3535(d).

■ 2. In § 960.253, revise paragraph (b) to read as follows:

§ 960.253 Choice of rent.

* * * * *

(b) *Flat rent.* The flat rent is determined annually, based on the market rental value of the unit as determined by this paragraph (b).

(1) The PHA must establish a flat rent for each public housing unit that is no less than 80 percent of the applicable Fair Market Rent (FMR) as determined under 24 CFR part 888, subpart A; or

(2) HUD may permit a flat rent of no less than 80 percent of an applicable small area FMR (SAFMR) or unadjusted rent, if applicable, as determined by HUD, or any successor determination, that more accurately reflects local market conditions and is based on an applicable market area that is geographically smaller than the applicable market area used in paragraph (b)(1) of this section. If HUD has not determined an applicable SAFMR or unadjusted rent, the PHA must rely on the applicable FMR under paragraph (b)(1) or may apply for an exception flat rent under paragraph (b)(3).

(3) The PHA may request, and HUD may approve, on a case-by-case basis, a flat rent that is lower than the amounts in paragraphs (b)(1) and (2) of this section, subject to the following requirements:

(i) The PHA must submit a market analysis of the applicable market.

(ii) The PHA must demonstrate, based on the market analysis, that the proposed flat rent is a reasonable rent in comparison to rent for other comparable unassisted units, based on the location, quality, size, unit type, and age of the public housing unit and any amenities, housing services, maintenance, and utilities to be provided by the PHA in accordance with the lease.

(iii) All requests for exception flat rents under this paragraph (b)(3) must be submitted to HUD.

(4) For units where utilities are tenant-paid, the PHA must adjust the flat rent downward by the amount of a utility allowance for which the family might otherwise be eligible under 24 CFR part 965, subpart E.

(5) The PHA must revise, if necessary, the flat rent amount for a unit no later than 90 days after HUD issues new FMRs.

(6) If a new flat rent would cause a family's rent to increase by more than 35 percent, the family's rent increase must be phased in at 35 percent annually until such time that the family chooses to pay the income-based rent or the family is paying the flat rent established pursuant to this paragraph.

* * * * *

Dated: August 7, 2015.

Lourdes Castro Ramírez,

Principal Deputy Assistant Secretary for Public and Indian Housing.

Approved on August 7, 2015.

Nani A. Coloretti,

Deputy Secretary.

[FR Doc. 2015–22022 Filed 9–4–15; 8:45 am]

BILLING CODE 4210–67–P

DEPARTMENT OF HOUSING AND URBAN DEVELOPMENT

24 CFR Parts 3280, 3282 and 3285

[Docket No. FR–5295–F–02]

RIN 2502–AI83

On-Site Completion of Construction of Manufactured Homes

AGENCY: Office of the Assistant Secretary for Housing-Federal Housing Commissioner, HUD.

ACTION: Final rule.

SUMMARY: This final rule establishes a procedure whereby construction of new manufactured housing that is substantially completed in the factory can be completed at the installation site, rather than in the plant. Before this rule, a manufacturer would first be required to obtain HUD approval for on-site completion of each of its designs using the alternate construction provisions of HUD's regulations. This final rule simplifies this process by establishing uniform procedures by which manufacturers may complete construction of their homes at the installation site without having to obtain advance approval from HUD. This final rule applies only to the completion of homes subject to the Manufactured Home Construction and Safety Standards, not to the installation of homes subject to the Model Manufactured Home Installation Standards. Moreover, this final rule would not apply when a major section of a manufactured home is to be constructed on-site.

DATES: *Effective Date:* March 7, 2016

FOR FURTHER INFORMATION CONTACT: Pamela B. Danner, Administrator, Office of Manufactured Housing Programs, Department of Housing and Urban Development, 451 7th Street SW., Room 9168, Washington, DC 20410; telephone 202–708–6423 (this is not a toll-free number). Persons with hearing or speech impairments may access this number via TTY by calling the Federal Relay Service at 1–800–877–8389 (this is a toll-free number).

SUPPLEMENTARY INFORMATION:

I. Background

The National Manufactured Housing Construction and Safety Standards Act of 1974 (42 U.S.C. 5401 *et seq.*) (the Act), as amended, authorizes HUD to establish and amend the Manufactured Home Construction and Safety Standards (the Construction and Safety Standards, or Standards). The Construction and Safety Standards established by HUD are codified in 24 CFR part 3280. The Act also authorizes HUD to conduct inspections and investigations necessary to enforce the Standards, to determine whether a manufactured home fails to comply with an applicable standard or contains a defect or an imminent safety hazard, and to direct the manufacturer to furnish notification of such failure, defect, or hazard, and, in some cases, to remedy the defect or imminent safety hazard through established procedures necessary to ensure compliance with the Construction and Safety Standards and the related enforcement and monitoring provisions of the Act. These procedures are codified in 24 CFR part 3282. As provided in § 3282.1(b), HUD's policy is to work in partnership, especially with State agencies, in the enforcement of the Construction and Safety Standards, consistent with the public interest.

This final rule establishes procedures to permit completion of new manufactured housing at the installation site, rather than in the factory, under certain circumstances. Prior to this rule, manufacturers were required to request and obtain advanced HUD approval to permit alternative construction (AC) under § 3282.14(b), for each model of home that it wanted to complete on-site rather than in the production facility. Among other things, manufacturers

were required to include in their requests information regarding how the construction work completed on-site would bring the home into conformance with the Construction and Safety Standards. This final rule establishes simplified procedures that eliminate the requirement for the manufacturer to obtain advance HUD approval and permits certain construction to be completed on-site rather than in the factory when the completed site work will bring the home into conformance with the Manufactured Home Construction and Safety Standards.

This final rule follows a proposed rule published on June 23, 2010 (75 FR 35902), and takes into account public comments received on the proposed rule. In preparing this final rule, HUD also reconsidered and incorporated some of the earlier comments provided by the Manufactured Housing Consensus Committee (MHCC) during the development of the proposed rule. The MHCC is a Federal Advisory Committee authorized by the Manufactured Housing Improvement Act of 2000 (Pub. L. 106–569) (42 U.S.C. 5403). The MHCC was established to provide HUD with periodic recommendations regarding Federal Manufactured Housing Construction and Safety Standards and related procedural and enforcement regulations.

II. Changes and Clarifications Made in This Final Rule

This final rule follows publication of the June 23, 2010, proposed rule and takes into consideration the public comments received on the proposed rule. In response to public comment, a discussion of which is presented in the following section of this preamble, and in further consideration of issues addressed at the proposed rule stage, the Department is making the following changes at this final rule:

- Section 3280.5 has been revised to conform to this final rule to require that the manufacturer's data plate contain information, if applicable, stating that, except for the components completed on-site, the home has been substantially completed in accordance with an approved design and has been inspected in accordance with the Construction and Safety Standards.
- Section 3280.305 has been revised to provide that the attic floor of homes with high-pitched roofs (with slopes of 7:12 or greater), completed on-site, be designed to support live loads of 40 pounds per square inch. The attic floor of homes with roofs with slopes less than 7:12 that contain an attic space that can be used for storage must be designed for a storage live load of 20 pounds per square foot.
- Section 3282.603(d) has been revised to provide that the contents of the Design Approval Primary Inspection Agency (DAPIA) approval, in addition to items listed in this section in the proposed rule, must include a unique site completion numeric identification for each approval for each manufacturer (*i.e.,* manufacturer name or abbreviation, SC–XX) and a quality control checklist to be used by the manufacturer and Production Inspection Primary Inspection Agency (IPIA) and approved by the DAPIA to verify that all required components, materials, labels, and instructions needed for site completion are provided in each home prior to shipment.
- Section 3282.604(c) of the proposed rule which would have required the DAPIA to determine if complex work requires special criteria or qualification for the IPIA inspector has been removed in this final rule.
- Section 3282.605(a) has been revised to permit the ''SC'' designation to be used as either a prefix or suffix in the serial number for homes or sections of homes completed on-site.
- Section 3282.605(b) has been revised to remove the requirement that the manufacturer include a green, on-site certification label of the same size, location, material, and fastening as provided by § 3280.11. Rather, this final rule provides that the manufacturer have a label affixed to the home, in accordance with § 3282.362(c)(2).
- Section 3282.605(d)(4) has been revised to provide that the manufacturer must, within 5 business days after receiving notification from the IPIA regarding acceptance of its final site inspection report, provide the purchaser or lessor, as applicable, the manufacturer's final site inspection report.
- Section 3282.607 has been revised to provide that the IPIA is responsible for reporting to HUD, the DAPIA, and manufacturer if one or more homes has not been site inspected prior to occupancy or when arrangements for one or more manufactured homes to be site inspected have not been made.
- Section 3282.608 has been revised in several ways. First, HUD removed the requirement that the manufacturer certify the home by affixing the on-site completion certification label as proposed at paragraph (f), and that the manufacturer notify a State or local jurisdiction of any add-on to the home as proposed by paragraph (n). HUD also revised paragraph (e) by adding the requirement that the manufacturer maintain a copy of any applicable DAPIA-approved quality assurance manual for on-site completion, the approved instructions for completing the construction work on-site, and the approved inspection checklist at the job site until all on-site work is completed and accepted by the IPIA. HUD also added paragraph (f) which makes the manufacturer responsible for the satisfactory completion of all on-site construction and required repairs and for authorizing a licensed contractor or a similarly qualified person to complete site construction and needed repairs. HUD also added paragraph (g) to require that the manufacturer provide a written certification to the lessor or purchaser when all site construction work is completed that each home, to the best of the manufacturer's knowledge and belief, is constructed in conformance with the Federal Manufactured Home Construction and Safety Standards. Finally, HUD revised paragraph (m) of the final rule to require the manufacturer to provide a copy of the site report to a State Administrative Agency (SAA), upon request.
- Section 3285.801(f)(2) has been revised to provide that homes with roof slopes of less than 7:12, including any designs incorporating peak cap construction or peak flip construction, are exempt from IPIA inspection and are to be inspected in accordance with 24 CFR part 3286.

III. The Public Comments

The public comment period for the June 23, 2010 (75 FR 35902), proposed rule closed August 23, 2010. In addition to soliciting comments on the proposal as a whole, HUD invited comments on 26 specific questions. HUD received 20 public comments. Comments were submitted by individuals; a housing alliance; a housing and community development organization; a vertically integrated manufactured housing company; a marketer of factory-built homes; a fire, building, and life-safety organization; manufactured housing associations; an industry trade journal; a State licensed installer/manager; a producer of manufactured housing; and a trade association representing all segments of the factory-built housing industry. The following section of this preamble summarizes the significant issues raised by the commenters on the June 23, 2010, proposed rule and HUD's responses to these comments.

A. General Comments

Consistency of the Rule With the Act

Comment: Several commenters stated that properly implemented, the rule supports the goals of the Manufactured

Housing Improvement Act of 2000 to ''facilitate the availability of affordable manufactured homes'' and ''encourage innovative and cost-effective construction techniques for manufactured homes.'' These commenters stated that allowing selected completion of construction after the home is transported to the site will also encourage the use of designs and techniques that will demonstrate the adaptability and versatility of manufactured housing. The commenters stated that the current process of HUD approval of AC requests on a case-by-case basis is time consuming, unduly costly, and ultimately unnecessary given the third-party design approval and quality control inspection infrastructure that the program already has in place.

HUD Response: HUD agrees with the commenters that allowing selected completion of homes to conform to the Manufactured Home Construction and Safety Standards after the homes have been transported to the site will encourage and facilitate use of innovative designs and construction methods and that its current method of approving AC requests has been time consuming.

Comment: Another commenter stated, however, that the manufactured home program appears to be expanding beyond the scope of the Act. Specifically, the commenter stated that the manufactured home industry of today appears to be competing with site-built and modular homes constructed to site-built codes. Rather than providing affordable, safe, durable, low-cost housing, the manufactured housing industry is trying to outdo site-built homes while trying to avoid the site-built codes and regulations adopted by most States with preemptive and weakened Federal regulations that are not strictly enforced to ensure safe, durable housing for consumers.

HUD Response: The scope of HUD's authority to regulate the manufacture of manufactured homes is established by the Manufactured Housing Construction and Safety Act, as amended. Under the Act, HUD is responsible for establishing construction and safety standards that, among other things, protects residents of manufactured homes, while encouraging innovation and cost-effective construction techniques. This rule recognizes that manufactured housing is evolving in ways that may not have been contemplated when the Act was enacted. Nevertheless, this rule remains consistent with the Act and its goals and reflects HUD's efforts to encourage innovative designs, while ensuring that high construction standards continue to be met.

Overall Purpose of the Rule is Too Broad

Comment: One commenter stated that under the proposed rule, there are many situations that would require extensive approval, reporting, and notification procedures and that there is not a clear ''trigger'' for when this new process would be required. The commenter stated, for example, that there are a number of existing DAPIA approvals that currently allow site installation of certain components, such as the field installation of double exterior doors (to prevent damage during transportation) and the field installation of fireplace hearths that cross the mating lines. These on-site installations are minor in nature and are already a natural part of the current process. The commenter asked, therefore, whether they would fall under the new proposal.

HUD Response: Yes, the field completion and installation of these components would be allowed under § 3282.602(a)(4) and (a)(5) of the final rule.

Rule Will Create Confusion for Consumers

Comment: One commenter stated that the proposed rule would significantly change the procedure for the on-site assembly of manufactured homes and will create confusion with consumers and retailers and may add unnecessary cost. The commenter stated that the completion of manufactured homes on-site should be left to the State or local authority having jurisdiction, working from manufacturer and DAPIA-approved methods of site assembly.

HUD Response: HUD believes that this rule will not create confusion with consumers and retailers or add to costs currently incurred by manufactures under the AC procedure for similar site-completion work. The final rule continues to require the IPIA rather than a State or local authority having jurisdiction to conduct the inspection. HUD does not agree with the commenter's suggestion that entities other than IPIAs conduct the final site inspection, as State or local jurisdictions are often unfamiliar with the requirements of the Standards and are not authorized to conduct these inspections on HUD's behalf.

Rule Shifts Regulatory Burden to Retailers and Installers

Comment: Several commenters recommended that HUD withdraw the proposed rule given its lack of accountability, oversight, and enforcement, coupled with its failure to recognize the concerns of the retailers, installers, and home buying public. Another commenter stated that the views and concerns of retailers and certified installers in States that have approved programs have not been considered. One commenter described the on-site rule as the manufactured housing industry trying to shift the burden to retailers and installers. Other commenters claimed that the rule adds unnecessary administrative paperwork that will restrict the manufacturer and retailer's ability to use the new process effectively.

HUD Response: Rather than adding layers of administrative paperwork, HUD believes that this final rule streamlines the approval process for on-site construction. This final rule adds only minimal burdens for retailers and installers. The final rule requires retailers to provide a copy of the consumer notice to prospective purchasers before sale; however, under current AC practices, they are already required to provide such a notice to purchasers. The only burden shifted to installers is the inclusion of the completion of peak flip and peak cap construction as installation, rather than construction, when the roof pitch is less than 7:12 and the home is designed to be located in Wind Zone I. Manufacturers continue to remain responsible for successful completion of all site work to conform to HUD's standards and regulations.

Rule Should Clearly Identify Excluded Close-up and Related Work

Comment: Several commenters, citing language in the preamble of the proposed rule, agreed with the exclusion of close-up work from the proposed rule but recommended that the rule specify the types of close-up work that would be excluded from the rule. These commenters recommended that close-up work excluded from the rule include: (1) Duct connection from half to half and additional crossovers; (2) dryer vent, range cook-top exhaust termination vents; (3) ridge vents; (4) plumbing connections in the attic; (5) gas line connections between the halves; (6) the main power supply connection; (7) electrical crossover connections; (8) front and rear siding; and (9) floor and roof connections (*e.g.,* lags, straps, etc.). According to the commenters, specifying the types of close-up work excluded from the rule will avoid future disputes regarding the scope of on-site completion and reduce unnecessary costs for manufacturers and consumers.

HUD Response: HUD agrees that specifying the types of close-up work

excluded from the rule will avoid future disputes; however, the specific types of close-up work cited by the commenters are already covered under various provisions of HUD's Model Manufactured Home Installation Standards, or would be considered as components for construction qualifying for on-site completion under § 3282.602(a) of this final rule.

Comment: A commenter recommended that HUD remove terms such as ''reasonably'' and ''practically'' from the final rule since these terms are not quantifiable and meaningless in the regulation.

HUD Response: HUD agrees with the commenter and has removed the terms ''reasonably'' and ''practicably'' from the final rule.

Rule Should Adopt a More Streamlined and Less Redundant Labeling and Reporting Method

Comment: Several commenters described HUD's method of designating homes constructed on-site with an ''SC'' designation as a prudent and necessary requirement. These commenters recommended, however, that manufacturers should have the flexibility of including the ''SC'' designation as either a prefix or a suffix, or in the middle of the serial number. According to these commenters, many manufacturers use the serial number for various types of recordkeeping and invoicing. Requiring manufacturers to use the ''SC'' designation as a prefix is unnecessarily restrictive and will necessitate cumbersome and extensive changes to current database programs and recordkeeping practices.

HUD Response: HUD agrees with the commenters and has revised § 3282.605(a) of the final rule to permit the ''SC'' designation to be used as either a prefix or suffix in the serial number for homes or sections of homes completed under this rule.

Comment: Several commenters strongly opposed the use of a green on-site completion certification label. These commenters stated that use of a different color permanent label for a home completed on-site will lead to significant disorder in the market, which already suffers from confusion between manufactured homes, modular homes, and park models. According to these commenters, the label is utilized by consumers, code inspectors, zoning officials, lenders, and appraisers as the primary distinguishing feature to differentiate between these different types of factory-built housing. The commenters recommended that the proposal to require a data plate with an ''SC'' designation, combined with a notice to the consumer, would be sufficient to meet the objectives of this proposal. These commenters also stated that consumer notice should be provided at the time the buyer enters into a contract to purchase the home rather than requiring it to be posted in the home. This will ensure that the buyer has complete knowledge of the status of the home and knows that it will not be complete until a certificate of occupancy is provided. Another commenter stated that there is no way to get the text required by § 3282.605(b)(2) on a 2in x 4in label and make it legible.

HUD Response: HUD agrees with the commenters and is revising § 3282.605(b) of the final rule to remove the requirement that the manufacturer include a green, on-site certification label. Rather, the current label required by § 3282.362(c)(2) will be required for homes completed on-site. The final rule continues to require, however, that the consumer notice be provided to prospective purchasers before sale of the home is completed.

Comment: A commenter stated that HUD's existing label method should be viewed to signify compliance of the home prior to delivery from the factory. According to the commenter, a label placed on the unit at the factory cannot signify more because future on-site construction and inspections have not yet occurred.

HUD Response: The placement of the label on the home at the factory is consistent with the current AC process, which requires the IPIA to inspect the unit at the site to verify that all work that could not be completed at the factory is satisfactorily completed on-site. This final rule requires the IPIA to inspect all work that could not be completed at the factory and to verify that the home complies with the Department's Standards when completed on-site. Further, under this final rule, a home cannot be occupied until a successful inspection has been completed by the IPIA.

Comment: Several commenters questioned the requirement that the manufacturer notify the appropriate State or local jurisdiction of any add-on to the home that has not been inspected by the State or local jurisdiction as unnecessary and inappropriately placing responsibility on the manufacturer to certify that the home meets the Federal Manufactured Home Construction Safety Standards. The commenters suggested that this requirement may raise liability issues by extending responsibility for construction issues not covered by the Construction and Safety Standards to the manufacturer.

HUD Response: The requirement in § 3282.608(n) of the proposed rule for the manufacturer to notify the State or local jurisdiction of any add-on to the home has been removed from this final rule.

Frequency of On-site Inspections

Comment: Several commenters expressed concern regarding the provision requiring an on-site inspection to be completed by the IPIA for every home prior to occupancy. According to the commenters, the reporting requirements in the proposed rule are redundant and have the potential to cause unnecessary, costly delays in loan closings and settlements; increase costs for the homebuyer; and reduce consumer satisfaction. The commenters questioned, for example, whether it was necessary to require both the IPIA and the manufacturer to prepare a site inspection report. According to the commenters, the required DAPIA approved ''on-site'' inspection checklist can be used by all parties to provide the necessary information and assurances that the on-site work was completed in accordance with the DAPIA approved design. The checklist can be expanded to include the necessary manufacturer's certification, and the identifying items specified in § 3282.605(d)(2) of the proposed rule, *e.g.,* serial numbers, names and addresses, etc. This expanded inspection checklist can be used for the necessary reporting requirements and can be used to obtain the certificate of occupancy and can serve as the necessary documentation for lenders, settlement agents, State Administrative Agencies (SAA's) and HUD.

HUD Response: HUD does not agree with the commenters and a successful on-site inspection must be independently completed by the IPIA prior to occupancy for all site completed homes, as required by this final rule.

Comment: Several commenters recommended that site work be treated as yet another ''stage of production'' whereby each unit is inspected in at least one stage of its production. The commenters recommended that the rule be changed to reflect current inspection practices and extend flexibility to the IPIA for determining frequency of on-site inspections as they deem necessary based on complexity of the design and history of past inspections. As an option, the commenters recommended that HUD modify the rule to allow a manufacturer to elect either 100 percent on-site inspection offset by reduced in-

plant inspections, or audit type inspections subject to frequency adjustments based on demonstrated compliance levels.

HUD Response: HUD believes that the construction completed on-site is part of the final production necessary to complete the home. HUD believes that IPIA inspection of each home completed on-site is required to ensure compliance with its Safety and Construction Standards since on-site construction necessarily involves the completion of a variety of unique design specification and quality control procedures that may be performed by staff or representatives assigned by retailers or manufacturers for which there is no way for HUD to ensure their knowledge and qualifications.

Comment: One commenter stated that the proposed rule allows 10 days after IPIA approval for the manufacturer to provide the report to the consumer. According to the commenter, this time frame is unrealistic and contrary to a number of State laws defining completion of sale.

HUD Response: HUD agrees with the commenter and has revised § 3282.605(d)(4) of the final rule to require that the report be provided 5 days after IPIA approval to facilitate the completion of sale.

Non-IPIA Inspections of On-site Work

Comment: Several commenters supported provisions in the proposed rule prohibiting non-IPIA inspections of on-site work. According to these commenters, allowing non-IPIA inspections of the on-site work would erode HUD's authority and is contrary to the existing and effective inspection process in the current regulations. In addition, it would be a disincentive for States to become HUD-approved State IPIAs under the current regulations, and would complicate the current inspection process. These commenters stated that if SAAs wish to become IPIAs as provided under the current procedural and enforcement regulations, they have every opportunity to do so through the appropriate approval process.

HUD Response: HUD agrees with the commenters. As previously indicated, only IPIAs or representatives of IPIAs are authorized to perform on-site completion inspections under this final rule.

Comment: Another commenter stated that completion of manufactured homes on-site should be left to the State or local authority having jurisdiction over the work site, working from manufacturer/DAPIA approved methods of site assembly. According to the commenter, if State or local authorities having jurisdiction are not allowed to inspect on-site construction, a large segment of the consumer protection will have been lost from the manufactured housing program and it may increase the cost to consumers as local authorities having jurisdiction will still invoice, issue permits, and inspect other on-site work.

HUD Response: HUD disagrees with the commenter. Using State or local jurisdictions to perform the on-site inspections would be both outside of HUD's regulatory system, as established under 24 CFR part 3282, and would create inconsistencies in interpretation, tracking, and reporting between those entities and the Department and may result in unnecessary costs for consumers. In addition, some State or local jurisdictions may not have the ability or resources to perform the inspection.

Rule Imposes Additional Burdens and Confusion on Local and State Building Code Enforcers

Comment: Several comments stated that the rule will cause many local municipalities and State building code enforcers to reexamine their current programs. According to these commenters, current building codes were enacted under the assumption that every section of manufactured housing would be constructed in accordance with approved designs and inspected under an approved quality assurance program. On-site completion would change this and shift compliance responsibilities to local and State officials who will have to reexamine their current programs to include these responsibilities.

HUD Response: HUD does not believe that the rule will impact current programs of State or local building code enforcers or create additional confusion for consumers. The final rule makes no changes from current AC procedures for inspection or acceptance of the work being completed on-site and therefore should not impact current programs of State or local building code enforcers.

B. Specific Issues for Comment

To assist in HUD's development of this final rule, HUD solicited feedback on specific questions and issues associated with its on-site completion procedures. Each question will be followed by the comments received and HUD's responses to those commenters in developing this final rule.

1. How should the rule define the limits on the construction work that may be completed on-site

Comment: Several commenters recommended that the rule retain a broad definition of ''substantial completion'' to not limit future technological advances. One commenter, for example, suggested that an external heating/cooling technology may become available that would differ based upon the geography or other physical feature of the job site, which might go beyond the ''box'' of the home. As a result, the commenter stated that HUD's final rule should maintain flexibility in defining the type of work that may be completed on-site. Other commenters agreed stating that there should not be a defined limit due to the infinite combinations of on-site construction. The commenters suggest that limits be left to the DAPIAs and manufacturers, who are well-suited to determine and clarify on-site construction. Other commenters stated that § 3283.602 provides adequate examples that qualify for on-site completion and provide adequate direction to enable manufacturers and DAPIAs to determine when on-site construction protocol is warranted. Another commenter stated that extending on-site completion to certain installation work, such as a hinged roof, is appropriate since this work is performed under the guidance of the manufacturer.

HUD Response: HUD shares an interest in promoting technological advances in the design and manufacture of manufactured housing and agrees that manufacturers and manufacturer's DAPIAs and IPIAs should have flexibility in determining the scope of construction that may be approved to be completed on-site. HUD also agrees that § 3282.602(a) of this final rule contains adequate examples to determine whether a particular type of construction may qualify for on-site completion. This flexibility should encourage and not inhibit future technological advancements. Further, the final rule does not change current practice with regard to which site work is considered construction and which is considered installation, except for the inclusion of peak flip or peak cap construction with roof slopes less than 7:12, when homes are designed to be located in Wind Zone I.

2. Should the proposed requirements applicable to on-site completion in accordance with the construction and safety standards be extended to repairs of homes in the hands of retailers or distributors or to work proposed to be defined as installation, especially close-up details for multiple and single sections?

Comment: Several commenters stated that repairs should not be included in the rule. These commenters submitted that repairs do not fit the scope of this rule and including them will inevitably lead to consumer dissatisfaction. The commenters stated that subjecting repairs to the on-site process would also result in increased cost to consumers where there has been no indication of changes required from present practice.

HUD Response: HUD agrees. This final rule does not include any additional requirements for repairs of manufactured homes in the possession of retailers or distributors beyond those requirements currently in effect under 24 CFR part 3282, subpart F.

3. Has HUD drawn the proper lines between aspects of work on the home to be finalized as part of installation and those aspects that would be considered completion of construction under a special approval for either on-site or AC?

Comment: Several commenters stated that the distinction between on-site construction work and installation work should be clarified. According to these commenters, more clearly defining the work subject to on-site construction process would provide greater flexibility in the on-site inspection process and ensure uniform, preemptive Federal regulation and oversight of on-site work.

HUD Response: HUD believes that the distinction between on-site construction work and installation work is adequately provided by § 3282.602 of this final rule and related provisions in HUD's Model Manufactured Home Installation Standards, 24 CFR part 3285. In addition, HUD clarified the distinction for certain types of roof construction by allowing peak flip and peak cap construction with a roof pitch of less than 7:12, when located in Wind Zone I, to be considered as installation.

Comment: Another commenter stated that the rule cites examples of work to which the new rule would apply (*e.g.,* completion of dormer windows, additions of sidings/stone/stucco, certain types of hinged roofs, and assembly of multistory designs) which would be part of the construction standards if factory installed. The commenter continued, however, that this work also becomes part of the home installation if it is to performed on-site. According to the commenter, the rule does not clearly distinguish ''on-site construction'' from ''installation.'' As a result, it may be difficult to determine whether HUD's Construction and Safety or Installation Standards apply.

HUD Response: HUD does not agree with the commenter, and believes that this final rule distinguishes between on-site construction work that could or should have been completed in the factory and work that is considered part of the installation of the home.

Comment: Several commenters stated that including the on-site installation of certain components such as the field installation of double exterior doors and of fireplace hearths that cross the mating line are too broad and should be questioned. According to the commenters, allowing unregulated entities to provide alternate or additional building components without the benefit of proper oversight should not be permitted. The commenters stated that some appliances are likely to be installed in new manufactured homes that will not only take the home out of compliance, but also defeat some of the safeguards provided in the present Construction and Safety Standards.

HUD Response: As stated in response to a previous comment, the field completion and installation of these components are permitted under § 3282.602(a)(4) and (a)(5) of this final rule. Site installation of these types of building components, including appliances and fireplaces, are subject to final inspection and oversight by the IPIA under this final rule.

Comment: Several commenters expressed disagreement with HUD's decision to codify the Model Manufactured Home Installation Standards in part 3285 rather than incorporating them in the Construction and Safety Standards in part 3280 of the Code of Federal Regulations. However, despite this disagreement, the commenters agreed with HUD that on-site work covered by the proposed rule clearly entails final ''construction'' of the home and is subject to the Federal preemption.

HUD Response: The National Manufactured Home Construction and Safety Standards Act does not permit ''installation'' to be considered as ''construction'' and does not authorize codification of the Model Installation Standards under the preemptive provisions of 24 CFR part 3280.

4. What is the best method for assuring that the on-site construction work is inspected for compliance with the construction and safety standards prior to occupancy?

Comment: Several commenters stated that on-site inspection is a natural extension of the manufacturing process and, as a result, the inspection process should do the same. According to these commenters, each unit in the factory is inspected by an IPIA in at least one stage of its production. Further, manufacturer's personnel are responsible for inspection of all stages of production. The commenters submitted that this process should be applied to on-site construction and that the manufacturer's personnel certify completion, subject to sampling by the IPIA and that the frequency of inspections would be determined by the IPIA, based on the manufacturer's performance.

HUD Response: As the personnel and work crew at each home site typically varies, HUD considers the on-site construction work at each site to be similar to conducting a plant certification during which both the manufacturer and IPIA are responsible for inspecting each phase of the production to ensure the quality assurance system is properly functioning and the work performed conforms to the Standards. As such, the final rule makes the manufacturer responsible for satisfactory completion of all on-site work for each home and requires the IPIA to inspect all of the on-site construction work for each home.

5. Should the IPIA be the only entity permitted to conduct the on-site inspections required under this rule or should the rule be amended to permit a State to conduct the on-site inspections?

Comment: Several commenters stated that the inspection process needs to be uniform nationally, and recommend that only HUD-approved IPIAs be permitted to conduct on-site inspections. These commenters supported the provisions in the rule prohibiting parties other than the plant's IPIA from being responsible for inspections of on-site work performed by individuals that may be unqualified since to do otherwise may result in insufficient oversight. Several commenters opposed requiring or permitting on-site inspections by any State entity other than an approved State stating that such an approach would discourage States from becoming SAAs and, thereby, weakening and undermining the Federal-State partnership envisioned by the Act.

According to the commenters, a State option or mandate could also allow States to exercise IPIA-type enforcement powers without meeting all the requirements for HUD approval as an IPIA, thereby undermining HUD superintendence and control of the regulation of manufactured housing as provided by Federal law.

HUD Response: HUD agrees with these commenters. Inspections need to be uniform nationally and performed by entities that are knowledgeable with the requirements of the Standards. As a result and as stated in response to a previous comment, only IPIAs are authorized to conduct site completion inspections under this final rule.

Comment: Several commenters also stated that allowing non-IPIA agencies to regulate inspections of the on-site work would erode HUD's authority and is contrary to the existing and effective inspection process established by the current regulations. These commenters stated that inspections by non-IPIA agencies may expose consumers to inconsistent, ineffective, and more costly and/or improper regulation.

HUD Response: HUD agrees with these commenters and reiterates that only IPIAs are authorized to conduct site completion inspections under this final rule.

Comment: Other commenters, however, suggested that the final rule allow manufacturers to elect between on-site inspections by IPIAs or by other HUD-approved, non-IPIA licensed and insured individuals or entities, such as Registered Professional Engineers or Certified Architect-Engineers. According to the commenters, permitting on-site inspections by HUD-approved, independent, licensed professionals would result in more effective competition and more affordable inspection prices and ensure proper accountability for errors or omissions.

HUD Response: HUD's interest in ensuring that inspections are conducted by entities knowledgeable with the Construction and Safety Standards requires that it authorize only IPIAs to conduct site completion inspections under this final rule. However, an IPIA may authorize or designate a professional engineer or architect or other inspection professionals to conduct inspections on their behalf.

6. Should the IPIA inspect all homes completed on-site, or should the IPIA undertake inspections only for a certain number or percentage of homes completed on-site?

Comment: Several commenters stated that not every home needs to be inspected and recommended that the IPIA should inspect a percentage of homes that convinces them that the process is being completed as directed. They suggested that the IPIA determine how many inspections should be performed, based on the complexity and multiple uses of an approval across different models and in accordance with the regulations. The commenters based their recommendation on the fact that IPIA personnel do not inspect each home at every stage of production and are not required to inspect homes at any specific stage of production, or specifically upon completion in a production facility.

HUD Response: As noted in response to a previous comment, HUD believes that construction completed on-site is part of the final production necessary to complete the home. Notwithstanding, on-site construction necessarily involves the completion of a variety of unique design specification and quality control procedures which may be performed by staff or representatives assigned by the retailer or manufacture. HUD does not have a means to ensure that such staff has the proper qualifications and knowledge to perform the work. As a result, HUD believes that IPIA inspection of each home completed on-site is required to ensure compliance with the Safety and Construction Standards.

Comment: Commenters also suggested that manufacturers be allowed to exercise an election regarding the inspection of homes completed on-site, in place of the one-size-fits-all, 100 percent inspection mandated by the proposed rule. According to the commenters, such an approach would reduce costs and create flexibility for the IPIA and HUD to increase the frequency of inspection as warranted by a particular manufacturer's compliance with its DAPIA approved on-site design and the Standards. One commenter recommended that HUD modify the rule to permit manufacturers to elect 100 percent on-site inspection, offset by reduced in-plant inspections, or audit type inspections subject to frequency adjustments based on demonstrated compliance levels.

HUD Response: HUD does not agree with the commenters. Initially, given the scope and complexity of construction that may be completed on-site, inspection of each home at the construction site is not a ''one-size-fits-all'' procedure. Further, providing manufacturers the option of reducing in plant inspections for each on-site inspection misses the fact that inspections on-site differ in scope and purpose from in plant inspections. Consequently, IPIA inspection of each home completed on-site is required by this final rule to ensure conformance to the Standards and the manufacturer's designs and specifications.

Comment: Some commenters expressed concern that requiring an on-site inspection to be completed by the IPIA for every home prior to occupancy will result in lengthy delays in the construction and sales process, add unnecessary costs for the homebuyer, and reduce consumer satisfaction. Other commenters suggested that the rule be changed to reflect current inspection practices and extend flexibility to the IPIA for determining the frequency of on-site inspections as they deem necessary based on complexity of the design and history of past inspection.

HUD Response: HUD does not anticipate that the inspection of each home completed on-site will result in any additional time or delay than is currently required for IPIAs to conduct inspections under AC procedures.

7. Should authorized inspectors be limited to State and local inspection officials, rather than permitting IPIAs to choose some other qualified independent inspector?

Comment: Several commenters stated that the IPIA should designate who may act on its behalf. They also stated that the qualifications of individuals selected to act on behalf of the IPIA should be no different than those required of individuals conducting in-plant inspections.

HUD Response: Each IPIA may designate and authorize independent inspection professionals to conduct inspections on their behalf, as permitted by § 3282.607(d) of this final rule. Any IPIA that permits others to act on its behalf assumes full regulatory responsibility for those individuals.

8. Does HUD need to identify those aspects of completion of the home that are not subject to Federal Construction and Safety Standards and inform local inspectors that they may inspect those aspects?

Comment: Some commenters stated that designating those aspects subject to local inspection would be helpful as long as some consistency is maintained. However, other commenters stated that there should be no need for HUD's involvement in on-site work items that are not covered by or subject to the Standards. In addition, commenters also stated that when permits are required, those items are covered and inspected by the jurisdiction issuing the permit and these construction elements are the responsibility of others and outside the

control of the manufacturer. Other commenters stated that this is not part of the regulatory responsibility of manufacturers under Manufactured Home Construction and Safety Standards and should not be required.

HUD Response: The final rule requires the IPIA, rather than a State or local authority having jurisdiction, to conduct the inspection. HUD does not agree with the commenters' suggestion to permit entities other than IPIAs to perform the final site inspection. HUD believes that entities such as State or local jurisdictions are often unfamiliar with the requirements of the Construction and Safety Standards and are not are authorized to conduct these inspections on HUD's behalf.

9. Should the DAPIA be permitted to determine whether the complex work also requires special criteria or qualification for the IPIA inspector in order to perform the on-site inspection?

Comment: One commenter stated that the manufacturer, not the DAPIA, is responsible for the proper completion of all on-site work and, in conjunction with its IPIA, should be responsible for the proper inspection of such work. According to the commenter, 24 CFR part 3282, subpart I, makes the manufacturer responsible for noncompliances and defects in the home. As a result, the commenter recommended that the manufacturer and IPIA determine the appropriate qualifications for the on-site inspector in a given situation.

HUD Response: HUD agrees with the commenter. As a result, HUD has removed from this final rule the requirement proposed by § 3282.604(c) that would have made the DAPIA responsible for determining whether the on-site inspection required special testing or that the IPIA inspector have special qualifications to perform the on-site inspection.

Comment: Other commenters stated that the qualifications of individuals conducting on-site inspections should not be different than those of an IPIA inspector, and that the manufacturer and the IPIA should have responsibility for determining the appropriate qualifications of the on-site inspector in a given situation. Other commenters stated that the functions of the DAPIA and IPIA should complement each other rather than have barriers that prevent direct and open communication. As a result, these commenters stated that DAPIA oversight functions should not include responsibility for determining the specific skills necessary for an individual to conduct the on-site inspections.

HUD Response: As stated in the preceding response, HUD agrees with those comments and has removed from this final rule the provision that would have made the DAPIA responsible for determining whether the IPIA inspector requires special skills to conduct on-site inspections.

10. Should the rule establish, or provide that the DAPIA may establish in its approval a deadline for completion of the work on-site and final inspection?

Comment: Several commenters stated that the rule should address completion timelines and not permit nonuniform deadlines. However, other commenters disagreed and stated that completion time deadlines have no place in a construction standard. These commenters stated that unforeseen circumstances may arise which, if addressed in the rule, would subject the manufacturer and the IPIA to legal liability or regulatory consequences. Another commenter stated that time frame deadlines are almost always a part of the contractual negotiation with the consumer. Another commenter stated that for display models, deadlines for completion would not be possible to predict.

HUD Response: HUD believes that the deadlines for completion should be negotiated by the parties to the transaction. As a result, HUD has not added completion timelines or deadlines to this final rule.

11. Should HUD specify requirements for the retailer to notify the manufacturer that a home subject to the on-site completion process is ready for the manufacturer's final inspection, or should the requirements be left to private arrangements?

Comment: Several commenters suggested that arranging for the final inspection be left to private arrangements. Another commenter stated that HUD should specify that the retailer is responsible for notifying the manufacturer that a home is ready for final inspection.

HUD Response: HUD agrees with the commenter that recommended that arranging for the final inspection be left to private arrangements.

12. Should the regulations in 24 CFR 3282 subpart F be extended to provide that some or all of the procedures for manufacturer and IPIA inspection of the work on-site also apply to repairs, on-site or in retailer lots, of manufactured homes that are completed and labeled in the factory, but that are substantially damaged before being sold by a retailer?

Comment: Several commenters stated that the retailer is responsible for such items and the manufacturer should not be held responsible. Other commenters state that repairs should be left to the private arrangements between the manufacturer and the retailer.

HUD Response: If a home is damaged on a retailer's lot, it cannot be sold by the retailer to a consumer until the home is brought into compliance with the Standards. If the manufactured home is damaged on-site by some other entity, the manufacturer of the home remains responsible for its required repairs. Under the final rule, the manufacturer is to complete the work and any repairs and may authorize a licensed contractor or similarly qualified person to complete the work or repairs.

13. Should the rule address more explicitly what happens if the manufactured home does not pass the on-site inspection?

Comment: One commenter stated that it should be left to the IPIA and the manufacturer to determine what happens if a home does not pass inspection and if they cannot reach consensus in a timely manner then the homeowner has legal rights to remedy the situation. Another commenters stated that, this should be left to private arrangements and noted that the rule is clear that the home may not be occupied absent a satisfactory inspection.

HUD Response: This final rule requires that each home must successfully pass a final on-site completion inspection. The rule leaves it to the IPIA and manufacturer to determine how to resolve any areas that do not pass inspection so that a successful final inspection can be completed.

14. Is the proposed labeling procedure workable?

HUD responded to comments submitted in response to this question in Section A, General Comments, of this preamble.

15. What mechanism can be used to ensure that the prospective purchaser is provided with the Consumer Information Notice?

Comment: Several commenters stated that the retailer or manufacturer will advise the customer of any requirements applicable under the on-site construction approval during contract negotiations. Commenters recommended that the Consumer Information Notice be provided to the consumer when the contract is signed and that the homebuyer be required to sign the notice. Commenters stated that there is no need for notice to be posted in the home because this does not ensure that the consumer has read or will read the notice.

HUD Response: HUD believes the value in displaying the notice in the home is that it alerts perspective purchasers at the earliest opportunity that additional construction needs to be completed at the site before the home can be occupied. The final rule requires that the notice be both prominently displayed in the home and that a copy of the notice be given to prospective purchasers before the purchasers enter into a sales agreement to purchase the home. Removal or failure to provide the notice by any entity constitutes a violation of the regulations.

Comment: One commenter stated that times have changed and that unlike in the past, when retailers would purchase inventory to be sold off the lot, today's process is much different. According to the commenter, with few exceptions a potential customer will visit a model center and make decisions about floor plans, colors, exteriors, etc., and then have their home built. This is the point, according to the commenter, when the consumer needs to be informed about any SC approvals and the possible delay of their expected move-in. The commenter also stated that the display of the notice in the unit is unnecessary and of little value since it is unlikely that a retailer would display a unit that required SC approval.

HUD Response: Under the final rule it is the responsibility of the retailer to provide the notice to all prospective purchasers before the prospective purchaser enters into an agreement to purchase the home, as required by § 3282.606(c).

16. Should the rule clarify what is the ''date of manufacture'' for units completed under this procedure, for purposes of the information required to be included in the data plate?

Comment: One commenter stated that the rule should provide guidance on the issue to ensure uniformity and an even playing field for all regulated parties. Other commenters stated that regardless of what method HUD decides to use, the date of manufacture should be the date the label is affixed at the factory, prior to shipment, to allow completion of all paperwork that goes with the home. This will eliminate the need for additional paperwork, avoid miscommunications between the factory and the site, and ensure uniformity.

HUD Response: HUD agrees with the commenters that the date of manufacture is the date the label is affixed to a manufactured home at the factory, as specified in § 3282.7(h).

17. Can monthly reporting to HUD of on-site production be achieved better, such as through the use of individual reports, rather than combining the required extra information with the existing production report (Form 302) information?

Comment: One commenter stated that the current AC reporting process (quarterly) be applied to this rule. Another commenter stated that any new paperwork and related costs under the rule should be minimized to the greatest degree possible, consistent with safety. The commenter agreed, however, that the existing form be used.

HUD Response: The final rule has been revised to require an SC numeric identification with the monthly 302 production form, in lieu of the brief description of the work performed that was indicated in the proposed rule. This will provide HUD with the most up-to-date information with regard to homes produced for site completion. Under the final rule, each IPIA is required to maintain complete inspection records of all on-site inspections for at least 5 years.

18. Are there special concerns about the ability of a State PIA to conduct out-of-state inspections and about the costs for those State PIA inspections that should be addressed in the rule?

Comment: Some commenters indicated that IPIAs will be challenged to perform on-site inspections, especially those conducted out of State. These commenters also stated that any such concerns should be addressed outside of this rule, either in the regulations relating to State plans or as part of the regulations governing the qualification and approval of State IPIAs. Other commenters suggested that this issue be left to private arrangements between the State IPIA and the manufacturer. These commenters stated the IPIA, whether a State or private agency, must have the flexibility to select other qualified third-party inspectors for any on-site inspections.

HUD Response: HUD agrees that these arrangements are best addressed outside of the rule through private arrangements as suggested by some of the commenters. As a result, the final rule provides that the IPIA, whether State or private, is responsible for conducting the required on-site inspections by using its own inspectors or by independent qualified inspectors acceptable to the IPIA as its representative. The manufacturer is responsible for coordinating for these required inspections by the IPIA.

19. If the inspection requirements for on-site approvals are changed from the levels proposed, should the inspection requirements vary according to the kind of work involved?

Comment: Some commenters suggested that inspection requirements should be left to the manufacturer designing and the DAPIA approving the design, who are the most qualified to determine the appropriate inspection levels on-site. Other commenters suggested that changing inspection requirements might reduce compliance costs but that it would also create confusion, disputes, and need for a more intricate inspection system.

HUD Response: HUD agrees with those commenters that stated that multiple inspection requirements would add unnecessary complexity to the rule and create confusion for the public. As a result, under the final rule, the inspection requirements are the same regardless of the type of site construction work that is being completed.

20. Are there any special processing or inspection requirements that should be included in a final rule if HUD permits completion on-site of multistory and high-slope-roof style homes designed to be located in Wind Zones II and III?

Comment: Commenters stated that special inspection requirements have no place in a construction standard and reiterate that inspection requirements should be left to the manufacturer and the DAPIA. Other commenters stated that there is no evidence that this issue would require special processing or inspection requirements.

HUD Response: There are no provisions in the final rule for the DAPIA to require special processing or inspection requirements. At the option of the DAPIA, it may determine whether any special processing or inspection requirements are needed for site completion of the home. In addition, this final rule is not applicable to

completion of multistory homes and does not apply to attached garages as this subject is under current review by the MHCC and is expected to be addressed in future rulemaking by HUD.

21. Are there other jurisdictional concerns about the monitoring of the work completed on-site being the continuing responsibility of the manufacturer's IPIA?

Comment: A commenter stated that the manufacturer's IPIA must be allowed to use alternate, qualified inspectors outside their organization.

HUD Response: Section 3282.607(d) of the final rule allows independent, qualified inspectors acceptable to the IPIA to act as its representative or designee in making the required inspections.

22. What procedures should be established if an exclusive State IPIA is unable to conduct out-of-State inspections on homes approved for completion under this new process?

Comment: Several commenters stated that the manufacturer's IPIA must be allowed to use alternate, qualified inspectors outside their organization. These commenters stated that if the IPIA is unable or unwilling to help select a qualified party for the inspection, the manufacturer should be given the authority to select the inspection agent.

HUD Response: Please see HUD's prior responses regarding the use of other professionals to conduct inspections on behalf of the IPIA.

23. Should the manufacturer be required to provide a copy of the final site inspection report, or any other information about the on-site approval, to the SAA of the State in which the home is sited?

Comment: Several commenters stated that submitting related paperwork prior to a consumer complaint should not be necessary and that additional paperwork is a barrier to streamlining the process and is contrary to HUD's intention in issuing this rule. A commenter also stated that SAAs can request service records from the manufacturer when they receive a consumer complaint. Other commenters stated that additional paperwork would unnecessarily increase costs without providing corresponding benefits for consumers.

HUD Response: In response to these comments, HUD has revised § 3282.608(m) of the final rule to require the manufacturer to provide a copy of the site report to an SAA, upon request.

24. Should the rule extend authority to revoke or amend an approval to the SAA in the State where the factory is located, the SAA in the State where the home is sited, both, or neither?

Comment: Commenters stated that SAAs do not need to be involved in the SC process, unless, and until, they receive a consumer complaint. These commenters stated that the appropriate role of the SAA is to address consumer complaints and conduct monitoring as per the current procedural enforcement regulations.

HUD Response: HUD agrees. SAAs are not authorized to revoke or amend site construction approvals. Section 3282.609 of the final rule provides regulatory remedies if manufacturers fail to comply with the provisions of this final rule.

25. Should the final rule limit the on-site installation of all appliances except furnaces and water heaters due to problems experienced with improper venting and installation of these appliances?

Comment: Several commenters suggested that the rule only require SC for fuel-burning, built-in appliances and be limited to those appliances furnished by the manufacturer. The commenters also stated that a customer who decides to furnish his own appliances should assume responsibility for installing them properly.

HUD Response: HUD considered these comments and concluded that the final rule should continue to allow for the installation of all appliances, subject to a final site inspection by the IPIA.

26. Are the manufacturer's inspection responsibilities as outlined in § 3282.605(c) sufficiently clear?

Comment: Several commenters stated that the manufacturer's responsibilities are clearly outlined in § 3282.605(c)

HUD Response: HUD agrees that the manufacturer's responsibilities are clearly delineated in the final rule.

C. Comments on Specific Sections of the Regulation

Comment on § 3282.252(b): One commenter stated that the proposed amendment attempts to redefine when the ''completion of the entire sales transaction'' occurs and refers to the term ''set-up,'' which is not defined in either the Manufactured Home Procedural and Enforcement Regulations or this proposed rule.

HUD Response: HUD appreciates this comment and has changed the term ''set-up'' to ''installation'' in the final rule to be consistent with the terminology used in other parts of the rule.

Comment on § 3282.603(d): One commenter stated that this section would provide that all nine items delineated in paragraphs (d)(1) to (d)(9) must be included with each request for approval. According to the commenter, this is overly cumbersome. More specifically, the commenter recommended that paragraphs (d)(3), (d)(4), and (d)(6), be generalized and applicable to the process of SC as a whole and not be specific to and for any individual approval.

HUD Response: HUD does not agree with commenter. All items are needed and must be provided to the DAPIA for each site construction approval request to ensure that all site work can be completed in accordance with the manufacturers' designs, quality control procedures, standards, and regulations.

Comment on § 3282.605(d)(1): A commenter stated that there is no time limit for the IPIA to notify the manufacturers of the IPIA's final site inspection report.

HUD Response: HUD has revised § 3282.605(f) of the final rule to require the IPIA to notify the manufacturer within 5 business days of its acceptance of the manufacturer's final site inspection report.

Comment on § 605(d)(3)(i) to (iii): One commenter questioned if the IPIA must inspect the on-site completed work concurrently with the manufacturer, why would the IPIA have to ''formally'' accept or reject the inspection report. According to the commenter, waiting for the IPIA to issue a written acceptance delays the ability of the owner to move in and will inevitably lead to customer dissatisfaction.

HUD Response: As discussed in response to other comments in this preamble, HUD does not believe that issuance of a written acceptance by the IPIA will result any additional delays as that currently required by the AC procedures. Under the current AC procedures and the on-site procedures provided by this final rule, the IPIA must verify that all site completion work has been successfully completed by the manufacturer.

Comment on § 3285.801(f): Several commenters expressed concerns about moving single-hinged-roof designs from ''installation'' to ''construction.'' According to the commenters, the proposed rule would require that any hinged roof with a ridge box (peak cap) or peak flip (second hinge) be included under the on-site completion regime established by this final rule and, thereby, subject to inspection by the IPIA. They also suggested that this will

subject nearly every home with a hinged roof to fall under this rulemaking and add significant cost to consumers. The commenters urged HUD to leave this section unchanged, enabling hinged roofs to be regulated by the installation standards.

HUD Response: The revisions HUD is making to § 3285.801(f) do not change current practice used to determine which types of hinged roofs are covered by HUD's Model Installation Standards and will only extend these requirements to peak cap or peak flip construction for roof slopes less than 7:12, as suggested by the commenters, when the home is designed to be located in Wind Zone I. Otherwise, the final rule does not change the type of hinged roofs considered as construction and subject to AC under current procedures.

IV. This Final Rule

Prior to this rule, HUD reviewed and approved requests for on-site completion of construction of manufactured homes under § 3282.14. This procedure can be lengthy and, when originally implemented, was not intended to address the evolution and sophistication of the current modern manufactured housing construction techniques. Manufactured homes now include home design features, such as stucco or brick, that cannot reasonably be completed in the factory and which are currently being completed on-site under the AC process. HUD also recognizes that many parts of modern manufactured homes, such as components of smoke alarm, heating, ventilation, air conditioning, and plumbing systems, are typically shipped loose with the home. It is only when these systems are completed that the homes comply with the Construction and Safety Standards.

This final rule establishes simplified, uniform procedures at 24 CFR part 3282, subpart M, that permit manufacturers to complete the construction of manufactured housing on-site, rather than in the factory, under certain circumstances, without obtaining advance approval from HUD. Under this final rule, HUD's approved DAPIAs and IPIAs (collectively known as Primary Inspection Agencies (PIAs) are authorized to approve and inspect certain construction for manufactured homes designed to be completed on-site. Delegating this responsibility to HUD's PIAs is consistent with HUD's policy to expand regulatory flexibility, encourage innovation in the construction of manufactured homes, and facilitate the timely completion of manufactured homes on-site.

As a result of this final rule, manufacturers may now complete the home in the factory, in accordance with the Construction and Safety Standards and an approved quality assurance manual, or may complete work on certain aspects of the home on-site in accordance with procedures established by this rule, which bring the home in conformance with the Construction and Safety Standards. The designs for construction work to be done on-site in accordance with the procedures in this final rule are subject to Construction and Safety Standards; accordingly, State and local jurisdictions are preempted from establishing their own design requirements for these aspects of the home, unless the requirements are identical to the Construction and Safety Standards. Manufacturers also may continue to seek approval through the AC process under the procedures established by § 3282.14 for construction that does not comply with the Construction and Safety Standards.

The Federal Manufactured Housing program is based upon national Construction and Safety Standards that are enforced through the manufacturer's quality control systems, in-plant compliance inspections by HUD-approved third-party agencies, and performance monitoring of those agencies in the plant. Given these conditions, this final rule does not permit major portions of a home to be completed beyond the plant, as that would avoid the normal inspection and certification process, and may frustrate legitimate local and State code enforcement efforts. Notwithstanding, § 3282.602 of this final rule lists aspects of construction of a manufactured home that may be approved to be completed on-site. Examples of the types of work that are not considered to involve substantial completion and which cannot be reasonably expected to be completed in the factory and to which the final rule applies include:

(a) Completion of roof dormers;

(b) Addition of stucco, stone, brick, or other siding that is subject to damage in transit;

(c) Retailer changes to the home on-site (such as add-ons subject to requirements established by the local authority having jurisdiction), when the home is taken out of compliance with the Construction and Safety Standards and then is brought back into compliance with the Standards. However, this provision does not apply to attached garages as this subject is under current review by the MHCC and is expected to be addressed in future rulemaking by HUD;

(d) Any hinged roof that is not considered part of the installation of the home (see § 3285.801(f)). Based on the recent recommendations of the MHCC and the comments received, the final rule now allows peak flip and peak cap construction in which the roof pitch of the hinged roof is less than 7:12, when located in Wind Zone I, to be deemed part of installation and exempt from IPIA inspection under the Regulations;

(e) Site installed appliances that are listed or certified for use in manufactured homes, such as a cooking range, furnace, or water heater; and

(f) Completion of any high-pitch (*i.e.,* roof pitch equals or exceeds 7:12) hinged roof construction that conforms to the construction and safety standards when finished. Completion of lower-pitched hinged roofs that are not penetrated above the hinge and are designed for Wind Zone I would be considered installation and are not covered by this final rule.

The procedures established by this final rule eliminate much of the reporting for site inspections of completed homes previously required under the AC process. Under this final rule, the manufacturer is only required to report, to HUD or its agent, the State of first location of the home, its serial number, and a brief description of the work done on-site. This information is to be included on an updated HUD Manufactured Home Monthly Production Report (Form 302), which manufacturers have in the past used to report to their IPIA and to HUD (or their monitoring contractor) certain completion and shipping information on labeled units.

As stated in this preamble, manufacturers may continue to seek approval through the AC process, under the procedures established by § 3282.14, for construction that does not comply with the Construction and Safety Standards. HUD will utilize § 3282.14, as originally intended, to encourage innovation and the use of new technology that are not in conformance with the Construction and Safety Standards. The AC process is limited to specific circumstances and requires the manufacturer to submit a formal request to HUD and show that the construction it proposes provides performance that is equivalent or superior to that required by the Construction and Safety Standards. Examples of designs in which the completed home does not comply with the Construction and Safety Standards when finished and would therefore continue to require an AC approval include:

(a) Multistory homes that do not comply with the standards because of

distance requirements to reach an exterior door for egress from a bedroom or other requirements;

(b) A home installed without floor insulation over a basement; that is, the existence of a basement will not substitute for insulation under the construction and safety standards (however, if the floor is properly insulated at the factory, it may be installed over a basement without having to use either the on-site or AC approval processes); and

(c) Attached garages, as this subject is under current review by the MHCC and is expected to be addressed in future rulemaking by HUD.

The procedures established by this final rule for on-site completion differ from the AC. Initially, this final rule applies to homes that can be certified as substantially meeting the requirements of the Construction and Safety Standards when labeled in the factory and that comply fully with those Standards when completed on-site. In addition, the on-site completion procedures established by this rule eliminate the direct HUD review and approval currently required under the AC process. Rather, this rule requires that manufacturers work directly with their DAPIAs and IPIAs to obtain approval to complete aspects of construction at the final home site.

This final rule will encourage the use of innovative designs and techniques that will further demonstrate the adaptability and versatility of manufactured housing. As manufacturers continue to make significant improvements to both the quality and the aesthetics of such homes, providing for simplified, uniform procedures that permit manufacturers to complete the construction of manufactured housing on-site, rather than in the factory, will support the increased recognition of manufactured homes as a viable source of unsubsidized, affordable housing and encourage zoning policies that do not discriminate against manufactured housing.

A. Section by Section Discussion of 24 CFR Part 3282, Subpart M, of the Final Rule

1. *Purpose and applicability (§ 3282.601).* Section 3282.601 establishes a procedure that allows manufacturers to deviate from existing completion requirements when an aspect of construction cannot reasonably be completed in the manufacturer's production facility. Manufacturers may utilize this procedure when all requirements of Subpart M are met. Generally, to be applicable a manufactured home must be: (1) Substantially completed in the factory; (2) meet the requirements of the Construction and Safety Standards upon completion of the site work; and (3) inspected by the manufacturer's IPIA, as provided in this subpart, unless specifically exempted as installation under HUD's Model Installation Standards, 24 CFR part 3285. These special procedures would be available only when the manufacturer, its DAPIA, and its IPIA agree to follow them, and can only be used if all affected homes are substantially completed in the factory, as defined.

2. *Qualifying construction (§ 3282.602).* Section 3282.602 describes those aspects of the construction of a manufactured home that may be completed on-site, under the Construction and Safety Standards, in accordance with the requirements of this subpart. Generally, the on-site approval process is available for work to complete a partial structural assembly or system that cannot reasonably be done in the factory. The reasons for this difficulty may result, for example, from transportation limitations, design requirements, or delivery of an appliance ordered by a homeowner. This final rule clarifies when work on certain hinged roofs can be completed under the installation standards, rather than through the on-site process under the Construction and Safety Standards.

3. *Request for approval; DAPIA approval (§ 3282.603).* Under this final rule, the manufacturer must request and obtain DAPIA approval to complete, on-site, the final, limited aspects of construction of a manufactured home that would be substantially completed in the factory (*i.e.,* the home leaving the factory must include: (1) A complete chassis; and (2) structural assemblies and plumbing, heating, and air conditioning systems that are complete except for limited construction that cannot reasonably be completed in the manufacturer's production facility and that the DAPIA has approved for completion on-site). Among other things, in the approval, the DAPIA will identify what work will be completed on-site through use of a unique site completion numeric identification for each manufacturer and will authorize a notice that includes a description of this work, identify instructions authorized for completing the work on-site (including any special conditions and requirements), and list all models for which the DAPIA approval is applicable.[1] As part of its approval, the DAPIA will stamp or sign each page of any set of designs accepted for completion on-site, and will include an ''SC'' designation on each page that includes an element of construction that is to be completed on-site.

In addition, the DAPIA must approve the part of the manufacturer's written quality assurance manual that is applicable to completing the manufactured homes on-site under the Construction and Safety Standards. When the part of the quality assurance manual applicable to the on-site completion also has received the concurrence of the IPIA, the system may be approved as part of the manufacturer's quality assurance manual. If this approval is not done as part of the initial approval of the entire quality assurance manual, the pertinent part of the manufacturer's manual will be deemed a change to be incorporated into the manual in accordance with established procedures (see §§ 3282.203(e) and 3282.361(c)(4)). The approval will also include other requirements, such as a quality control checklist to verify that all required components, materials, labels, and instructions needed for site completion are provided by the manufacturer and an inspection checklist, developed by the manufacturer and approved by the DAPIA, to be used in the manufacturer's and IPIA's final inspections. As with the procedures followed under an approval for AC, the manufacturer's IPIA is responsible for ensuring that the homes the IPIA inspects under the new procedures comply with the changes in the quality assurance manual, as provided in § 3282.362(a) of the existing regulations, and with the approved design or, where the design is not specific, to the Construction and Safety Standards.

4. *DAPIA responsibilities (§ 3282.604).* In addition to the DAPIA's regular duties under § 3282.361, this section provides that the DAPIA is also responsible for:

(a) Verifying that the manufacturer submits all required information, when a manufacturer seeks a DAPIA's approval to complete any aspect of construction on-site under § 3282.603;

(b) Reviewing and approving the manufacturer's designs, site completion instructions, and quality assurance manuals for the site work that is to be performed;

(c) Determining whether there are any other requirements or limitations deemed necessary or appropriate; and

[1] As with the AC process, an approval for on-site completion may be made more flexible when the DAPIA and manufacturer agree that the approval is not model-specific, but may be extended to additional models. See § 3282.14(c)(3).

(d) Revoking or amending its approval for on-site construction, as provided in § 3282.609, after determining that the manufacturer is: (1) Not complying with the terms of the approval or the requirements of § 3282.610; (2) the approval was not issued in conformance with the requirements of § 3282.603; (3) a home produced under the approval fails to comply with the Federal construction and safety standards or contains an imminent safety hazard; or (4) the manufacturer failed to make arrangements for one or more manufactured homes to be inspected by the IPIA prior to occupancy. Upon revocation or amendment of a DAPIA approval, the DAPIA must immediately notify the manufacturer, the IPIA, and HUD.

5. *Requirements applicable to completion of construction (§ 3282.605).* After an acceptable final inspection of work completed on-site, the manufacturer must report to HUD or its agent the serial number and a brief description of the work done on-site for each home produced under these procedures. This report must be consistent with the DAPIA approval and is to be submitted, in part, on the updated production Form 302. A copy of this report also must be submitted to the SAAs of the States where the home is substantially completed in the factory and where the home is sited, upon request. The serial numbers as provided by the manufacturer must contain the prefix or suffix ''SC,'' for site construction.

Based on the comments received, the final rule does not require a unique on-site completion label as indicated in the proposed rule, but instead requires that homes or sections of such homes have a label affixed in accordance with § 3282.362(c)(2) and be shipped with a Consumer Information Notice that meets the requirements of § 3282.606. Approved designs for completion of aspects of construction outside of the manufacturer's plant must be marked with the identification code for the appropriate approved set of designs, and must be included as a separate part of the manufacturer's approved design package. All aspects of construction that are completed on the final home site remain the responsibility of the manufacturer, which must ensure that the home is properly labeled and, as part of its final on-site inspection report provided to the IPIA, certify that the work is consistent with DAPIA-approved instructions and conforms with approved designs or, as appropriate under § 3282.362(a)(1)(iii), conforms to the Construction and Safety Standards. The IPIA is required to review all of the manufacturer's final on-site inspection reports and to inspect all on-site work completed pursuant to an approval under this new process. If the IPIA determines that the manufacturer is not performing adequately in conformance with the approval, the IPIA may require reinspections, until it is satisfied that the manufacturer is conforming to the conditions included in the approval. Based on public comments HUD has revised § 3282.605(d)(4) to require that the manufacturer provide the purchaser or lessor a copy of the final site inspection report within 5 business days of the IPIA's notification of its acceptance of the report.

6. *Consumer information (§ 3282.606).* In addition to the on-site completion certification label, this section requires that the home must be shipped with a ''NOTICE'' that explains that the home will comply with the requirements of the Construction and Safety Standards only after all of the limited on-site work has been completed in accordance with detailed instructions provided by the manufacturer, and the home has been inspected. The ''NOTICE'' is to be displayed in a prominent and highly visible location within the home (*e.g.,* a kitchen countertop or front door), and include information instructions for those aspects of construction to be completed on-site and provided with the home. The notice may only be removed after the final inspection report is completed and the purchaser or lessor is provided with a copy of the report.

The sale or lease of the manufactured home to the purchaser will not be considered complete (see § 3282.252(b)) until the purchaser has been provided with a copy of the manufacturer's final site inspection report, including the certification of completion that has been reviewed and accepted by the IPIA. However, HUD does not intend that failure to provide this report within 5 days of the date of the IPIA's notification will constitute a breach of contract. The manufacturer must maintain in its labeling records an indication that the final on-site inspection report and certification of completion has been provided to the purchaser and the retailer.

7. *Responsibilities of the IPIA (§ 3282.607).* The responsibilities of the IPIA include, in addition to the IPIA's regular duties under § 3282.362:

(a) Working with the manufacturer and the manufacturer's DAPIA to ensure that the manufacturer's quality control system has the proper procedures and controls to assure that the on-site construction work will conform to DAPIA-approved designs and HUD's construction and safety standards;

(b) Providing the certification labels that the manufacturer may use to label a home that has been substantially completed in the factory;

(c) Monitoring the manufacturer's system for tracking the status of homes built under the approval until the on-site work and necessary inspections have been completed, to assure that the work is being performed properly on all applicable homes;

(d) Performing the required inspections of the manufacturer's reports and site work, to verify compliance with the manufacturer's quality control system, the approved designs, and, as appropriate, the Construction and Safety Standards. Only the IPIA, or other qualified independent inspector acceptable to and acting on behalf of the IPIA, may perform these inspections. The inspector must be free of any conflict of interest (see § 3282.359) and not be involved in the sale or site completion of the home; and

(e) Maintaining a copy of each final site inspection report submitted by a manufacturer and each inspection report prepared or accepted by the IPIA, and reporting to HUD, the DAPIA, and manufacturer if one or more manufactured homes has not been site inspected prior to occupancy or if arrangements have not been made to site inspect one or more manufactured homes.

8. *Manufacturer's responsibilities (§ 3282.608).* The manufacturer's responsibilities include:

(a) Certifying the completed home is constructed in conformance with the Federal Manufactured Home Construction and Safety Standards, as indicated on the label, in § 3282.362(c)(2) of the Manufactured Home Procedural and Enforcement Regulations;

(b) Completing all work performed on a home that is necessary to assure compliance with the Construction and Safety Standards, regardless of who does the work or where it is completed. Such responsibility would not extend to any limited close-up work for multiple-section homes, as defined as installation work in the model installation standards;

(c) Working with the DAPIA and IPIA to obtain approval and concurrence on the quality control system the manufacturer will use to assure that the on-site work is performed according to DAPIA-approved designs, and to incorporate this system into the manufacturer's quality assurance manual;

(d) Working with the DAPIA to develop an approved checklist, providing the IPIA with the checklist to be used when the IPIA inspects the home after completion on-site, and notifying the IPIA that the home is ready to be inspected;

(e) Maintaining a system for tracking the status of homes built under the approval, to ensure that each home installed on a building lot has the on-site work and necessary inspections completed;

(f) Paying IPIA costs for performing on-site inspections;

(g) Providing inside the home and to the IPIA, a copy of the instructions for completing the work on-site, for monitoring/inspection purposes (the copy provided in the home may be provided with the installation instructions in the home). Either before, or at the time on-site work commences, the manufacturer must provide the IPIA with a copy of any applicable, DAPIA-approved quality assurance manual for on-site completion changes; the approved instructions for completing the construction work on-site; and the approved inspection checklist;

(h) Satisfactory completion of all on-site work construction and required repairs or authorizing a licensed contractor or similarly qualified person to complete all site inspection and repairs.

(i) Providing a copy of the final site inspection report and certificate of completion to the IPIA; first purchaser or lessor of the home, prior to occupancy; to the appropriate retailer, and to the SAA upon request;

(j) Maintaining a copy of the site inspection report and the notification of the IPIA's approval or acceptance of this report;

(k) Notifying the appropriate State or local jurisdiction of any add-on to the home, as referenced in § 3282.8(j), that is not covered by the manufacturer's inspection and certification of completion, but about which the manufacturer knows or reasonably should have known. The manufacturer is not required to provide this notification if the manufacturer knows that the State or local jurisdiction has already inspected the add-on; and

(l) Providing cumulative quarterly production inspection reports to HUD or its agent.

9. *Enforcement (§§ 3282.609, 3282.610, and 3282.611).* A manufacturer or IPIA found to be in violation of the requirements for this procedure may lose the discretion to utilize the on-site completion procedure in the future. HUD or the DAPIA also may withdraw or amend an approval for on-site construction if the manufacturer does not comply with the requirements for the approval or produces a home that does not comply with the Federal Construction and Safety Standards. Other remedies provided separately under the Act and HUD's regulations will also continue to be available, as applicable, but HUD would consider a manufacturer or IPIA that complies with the requirements for on-site completion to be in compliance with the certification requirements of the Act and regulations for aspects of construction that are covered by the on-site completion approval.

B. Conforming Changes

This final rule includes conforming changes to 24 CFR part 3280. Initially, HUD is revising § 3280.5 to require that the manufacturer's data plate contain information, if applicable, stating that, except for the components completed on-site, the home has been substantially completed in accordance with an approved design and has been inspected in accordance with the Construction and Safety Standards.

In addition, and as discussed in the preamble of the proposed rule, HUD is revising the structural design requirements in § 3280.305 for attic areas with high- or low-pitched roofs. As discussed in the preamble of the June 23, 2010, proposed rule, HUD stated that this rule as proposed would apply to the completion of any high-pitched (*i.e.,* the roof pitch equals or exceeds 7:12), hinged roof construction that conforms to the Construction and Safety Standards when finished. HUD sought public comment on whether different treatment for high-pitched roofs was needed since a portion of the attic would meet the ceiling-height/living-spaces requirements of the Construction and Safety Standards and, as such, would require the attic floor to be designed for floor live loads of 40 pounds per square inch. In response to this request, most commenters stated that extending on-site completion to certain installation work, such as a hinged roof, would be appropriate since this work is done under the guidance of the manufacturer. Another commenter stated that HUD should not allow the inspection of certain roof pitches to be under the installation standards, while requiring inspection of others under the provisions of the on-site construction rule. No commenter addressed whether HUD should conform the Construction and Safety Standards for high-pitched roofs that create attic space to be designed to resist a minimum design live load of 40 pounds per square foot, in accordance with 3280.305(g) of the standards, the design standard for floors, or that roofs with slopes of less than 7:12 that contain an attic area for storage be required to be designed for a storage live load of 20 pounds per square foot. As a result, as provided in the June 23, 2010, proposed rule, HUD is conforming the Construction and Safety Standards to address these elements of the home that results when the roof is raised via construction on-site in this final rule.

The final rule includes conforming changes to three other sections of 24 CFR part 3282. A conforming amendment is made to § 3282.252 (b) to change the term ''dealer'' to ''retailer.'' HUD is also conforming this section to this final rule by providing that the sale is complete upon delivery to the site, except that sales under this final rule will not be considered complete until the purchaser or lessor has been provided with a final site inspection report. A conforming amendment is also made to § 3282.552 to specify the information that is included on the reports currently submitted under 24 CFR part 3282. Finally, HUD is also using this rulemaking to make a technical correction to the heading of § 3282.8(a), which would be updated from ''mobile homes'' to ''manufactured homes''.

V. Findings and Certifications

Executive Order 12866 and Executive Order 13563

Executive Orders 12866 and 13563 direct agencies to assess all costs and benefits of available regulatory alternatives and, if the regulation is necessary, to select the regulatory approach that maximizes net benefits. Because this final rule allows manufactured housing manufacturers to complete construction of certain homes at the installation site without seeking advance approval from HUD, and thereby eliminating costly processing and construction delays, the rule was determined to not be a significant regulatory action under section 3(f) of Executive Order 12866, Regulatory Planning and Review, and therefore was not reviewed by the Office of Management and Budget (OMB).

This final rule establishes simplified, uniform procedures at 24 CFR part 3282, subpart M, that permit manufacturers to complete the construction of manufactured housing on-site, rather than in the factory, under certain circumstances, without obtaining advanced approval from HUD. Given the objective of the Federal Manufactured Housing program, this final rule does not permit major

portions of a home to be completed beyond the plant, as that would avoid the normal inspection and certification process, and may frustrate legitimate local and State code enforcement efforts. Notwithstanding, this final rule lists numerous aspects of construction of a manufactured home that may be approved to be completed on-site.

This final rule will encourage the use of innovative designs and techniques that will further demonstrate the adaptability and versatility of manufactured housing and eliminate the need for manufactures to apply for advance approval to complete construction of a manufactured home on-site. Easing the process for on-site construction of manufactured homes supports achievement of the goal of widely available safe, durable, and affordable manufactured housing.

Paperwork Reduction Act

This final rule contains provisions that are subject to review by the OMB under the Paperwork Reduction Act of 1995 (44 U.S.C. 3501–3520). As required by the Paperwork Reduction Act, HUD published a description of these provisions, with estimates of annual reporting, recordkeeping, and notice requirements, on June 15, 2015, at 80 FR 34165. Interested persons are encouraged to review and provide comment on HUD's proposed information collection. The 180-day delayed effective date for this rule will provide HUD the opportunity to complete the approval process for this final rule prior to its effective date. In accordance with the Paperwork Reduction Act, an agency may not conduct or sponsor, and a person is not required to respond to, a collection of information, unless the collection displays a currently valid OMB control number.

Unfunded Mandates Reform Act

Title II of the Unfunded Mandates Reform Act of 1995 (2 U.S.C. 1531–1538) (UMRA) establishes requirements for Federal agencies to assess the effects of their regulatory actions on State, local, and tribal governments and the private sector. This final rule does not impose any Federal mandates on any State, local, or tribal governments or the private sector within the meaning of UMRA.

Environmental Review

A Finding of No Significant Impact (FONSI) with respect to the environment was approved at the proposed rule stage in accordance with HUD regulations at 24 CFR part 50, which implement section 102(2)(C) of the National Environmental Policy Act of 1969 (42 U.S.C. 4332(2)(C)). The FONSI is available for public inspection between the hours of 8 a.m. and 5 p.m., weekdays, in the Regulations Division, Office of General Counsel, Department of Housing and Urban Development, 451 7th Street SW., Room 10276, Washington, DC 20410–0500. Due to security measures at the HUD headquarters building, please schedule an appointment to review the FONSI by calling the Regulations Division at 202–402–3055 (this is not a toll-free number). Individuals with speech or hearing impairments may access this number through TTY by calling the Federal Information Relay Service at 800–877–8339 (this is a toll-free number).

Regulatory Flexibility Act

The Regulatory Flexibility Act (RFA) (5 U.S.C. 601 *et seq.*) generally requires an agency to conduct a regulatory flexibility analysis of any rule subject to notice and comment rulemaking requirements, unless the agency certifies that the rule will not have a significant economic impact on a substantial number of small entities. It is HUD's position that this final rule does not have a significant economic impact on a substantial number of small entities. HUD and MHCC have recognized the benefit of maximizing opportunities for housing manufacturers to complete construction of some homes at the installation site without seeking advance approval from HUD. This final rule promotes this shared goal. The manufactured housing industry is rapidly expanding its offerings, and the inclusion of new design elements is viewed as key to the growth of this industry. On-site installation of innovative design elements will improve the aesthetic quality and overall attractiveness of the manufactured housing product, increasing the appeal of these homes to the public and improving cost effectiveness for the manufacturers, by allowing them to complete these structures at the construction site by installing these features there.

This rule also alleviates burden for all manufacturers, large and small, because it makes tangible streamlined improvements to the system regulating on-site construction of manufactured homes. This rule establishes procedures whereby manufacturers could complete construction of new manufactured housing on-site without being required to apply for HUD approval for on-site construction. This rule would apply only to work done to complete the manufacturing process required by the Manufactured Home Construction and Safety Standards. It would not affect the installation of homes subject to the model Manufactured Home Installation Standards, or apply in instances where a major portion of the home is to be constructed on site. In addition, this rule applies only to a subset of the total number of manufactured housing manufacturers—those that decide to incorporate the new design elements into their products. It is not a requirement that all manufacturers do so.

Finally, this final rule will have a beneficial effect by reducing the paperwork burden and costs of construction delays for all housing manufacturers, large or small. These manufacturers will no longer be required to apply repeatedly for variances regarding on-site construction utilizing design elements and innovations that are expected to become commonplace over time. Easing the process for on-site construction of manufactured homes supports achievement of the goal of widely available safe, durable, and affordable manufactured housing.

Accordingly, the undersigned certifies that this rule would not have a significant economic impact on a substantial number of small entities.

Executive Order 13132, Federalism

Executive Order 13132 (entitled ''Federalism'') prohibits an agency from publishing any rule that has federalism implications if the rule either imposes substantial direct compliance costs on State and local governments and is not required by statute or the rule preempts State law, unless the agency meets the consultation and funding requirements of section 6 of the Executive order. This final rule does not have federalism implications and would not impose substantial direct compliance costs on State and local governments or preempt State law within the meaning of the Executive order.

List of Subjects

24 CFR Part 3280

Fire prevention, Housing standards.

24 CFR Part 3282

Administrative practice and procedure, Consumer protection, Intergovernmental relations, Investigations, Manufactured homes, Reporting and recordkeeping requirements.

24 CFR Part 3285

Housing standards, Incorporation by reference, Installation, Manufactured homes.

Accordingly, for the reasons discussed in this preamble, HUD amends 24 CFR parts 3280, 3284 and 3285 as follows:

PART 3280—MANUFACTURED HOME CONSTRUCTION AND SAFETY STANDARDS

■ 1. The authority citation for parts 3280 continues to read as follows:

Authority: 42 U.S.C. 3535(d), 5403, and 5424.

■ 2. In 3280.5, revise paragraph (c) to read as follows:

§ 3280.5 Data plate.

* * * * *

(c) The applicable statement:

This manufactured home is designed to comply with the Federal Manufactured Home Construction and Safety Standards in force at the time of manufacture.or

This manufactured home has been substantially completed in accordance with an approved design and has been inspected (except for the components specifically identified in the instructions for completion on-site) in accordance with the Federal Manufactured Home Construction and Safety Standards and the requirements of the Department of Housing and Urban Development (HUD) in effect on the date of manufacture.

* * * * *

■ 3. In 3280.305 add paragraph (k) to read as follows:

§ 3280.305 Structural design requirements.

* * * * *

(k) *Attics.* (1) For roofs with slopes 7:12 or greater, the area of the attic floor that meets the ceiling-height/living-space requirements of these construction and safety standards must be designed to resist a minimum design live load of 40 pounds per square foot (psf) in accordance with paragraph (g) of this section.

(2) For roofs with slopes less than 7:12 that contain an attic area or for portions of roofs with slopes 7:12 or greater that do meet the ceiling height/living space requirements of the standards, the attic floor must be designed for a storage live load of 20 pounds per square foot (psf).

PART 3282—MANUFACTURED HOME PROCEDURAL AND ENFORCEMENT REGULATIONS

■ 4. The authority citation for part 3282 continues to read as follows:

Authority: 28 U.S.C. 2461 note; 42 U.S.C. 3535(d); 42 U.S.C. 5424.

■ 5. In § 3282.7, redesignate paragraph (kk) as paragraph (ll) and add new paragraph (kk) to read as follows:

§ 3282.7 Definitions.

* * * * *

(kk) *Substantial completion.* A manufactured home is substantially completed if all aspects of construction that can be finished in the manufacturer's plant are completed, except as provided in § 3282.603.

* * * * *

■ 6. In § 3282.8, revise the heading to paragraph (a) read as follows:

§ 3282.8 Applicability.

(a) *Manufactured homes.*

* * * * *

■ 7. In § 3282.203, add a sentence at the end of paragraph (e) to read as follows:

§ 3282.203 DAPIA services.

* * * * *

(e) * * * When applicable under § 3282.605, the IPIA must concur in the change before it can be approved by the DAPIA.

* * * * *

■ 8. In § 3282.252, revise paragraph (b) to read as follows:

§ 3282.252 Prohibition of sale.

* * * * *

(b) This prohibition applies to any affected manufactured homes until the completion of the entire sales transaction. A sales transaction with a purchaser is considered completed when all the goods and services that the retailer agreed to provide at the time the contract was entered into have been provided. Completion of a retail sale will be at the time the retailer completes installation of the manufactured home, if the retailer has agreed to provide the installation, or at the time the retailer delivers the home to a transporter, if the retailer has not agreed to transport or install the manufactured home. The sale is also complete upon delivery to the site if the retailer has not agreed to provide installation as completion of sale, except that any sale or lease under subpart M and as provided in § 3286.117(a) will not be considered complete until the purchaser or lessor, as applicable, has been provided with a final site inspection report.

* * * * *

■ 9. In § 3282.361, revise the first sentence of paragraph (c)(4) to read as follows:

§ 3282.361 Design Approval Primary Inspection Agency (DAPIA).

* * * * *

(c) * * *

(4) *Manual change approval.* Each change the manufacturer wishes to make in its quality assurance manual must be approved by the DAPIA, and, when subject to § 3282.604, concurred in by the IPIA. * * *

* * * * *

■ 10. Amend § 3282.362 by adding paragraph (d)(5), to read as follows:

§ 3282.362 Production Inspection Primary Inspection Agencies (IPIAs).

* * * * *

(d) * * *

(5) Records of all site inspections made as required under procedures applicable to approval of AC or on-site completion pursuant to §§ 3282.14 or 3282.610.

* * * * *

■ 11. Revise § 3282.552 to read as follows:

§ 3282.552 Manufacturer reports for joint monitoring fees.

The manufacturer must submit to the IPIA in each of its manufacturing plants, and to HUD or to the Secretary's agent, a monthly production report that includes the serial numbers of each manufactured home manufactured and labeled at that plant during the preceding month. The report must also include the date of manufacture, State of first location of these manufactured homes after leaving the plant, type of unit, and any other information required under this part. For all homes to be completed pursuant to subpart M of these regulations, the production report must also include a brief description of the work to be completed on site. The State of first location is the State of the premises of the retailer or purchaser to whom the manufactured home is first shipped. The monthly report must be submitted by the 10th day of each month and contain information describing the manufacturer's previous month's activities. The manufacturer is encouraged to submit the report electronically, when feasible.

■ 12. Add a new subpart M to read as follows:

Subpart M—On-Site Completion of Construction of Manufactured Homes

Sec.

3282.601 Purpose and applicability.
3282.602 Construction qualifying for on-site completion.
3282.603 Request for approval; DAPIA review, notification, and approval.
3282.604 DAPIA responsibilities.
3282.605 Requirements applicable to completion of construction.
3282.606 Consumer information.
3282.607 IPIA responsibilities.
3282.608 Manufacturer responsibilities.

3282.609 Revocation or amendment of DAPIA approval.
3282.610 Failure to comply with the procedures of this subpart.
3282.611 Compliance with this subpart.

§ 3282.601 Purpose and applicability.

(a) *Purpose of section.* Under HUD oversight, this section establishes the procedure for limited on-site completion of some aspects of construction that cannot be completed at the factory.

(b) *Applicability.* This section may be applied when all requirements of this subpart are met. To be applicable a manufactured home must:

(1) Be substantially completed in the factory;

(2) Meet the requirements of the Construction and Safety Standards upon completion of the site work; and

(3) Be inspected by the manufacturer's IPIA as provided in this subpart, unless specifically exempted as installation under HUD's Model Installation Standards, 24 CFR part 3285. This subpart does not apply to Alternative Construction (see § 3282.14) that does not comply with the Manufactured Home Construction and Safety Standards.

§ 3282.602 Construction qualifying for on-site completion.

(a) The manufacturer, the manufacturer's DAPIA acting on behalf of HUD, and the manufacturer's IPIA acting on behalf of HUD may agree to permit certain aspects of construction of a manufactured home to be completed to the Construction and Safety Standards on-site in accordance with the requirements of this subpart. The aspects of construction that may be approved to be completed on-site are the partial completion of structural assemblies or systems (*e.g.,* electrical, plumbing, heating, cooling, fuel burning, and fire safety systems) and components built as an integral part of the home, when the partial completion on-site is warranted because completion of the partial structural assembly or system during the manufacturing process in the factory would not be practicable (*e.g.,* because of the home design or which could result in transportation damage or if precluded because of road restrictions). Examples of construction that may be completed on-site include:

(1) Hinged roof and eave construction, unless exempted as installation by § 3285.801(f) of the Model Manufactured Home Installation Standards and completed and inspected in accordance with the Manufactured Home Installation Program;

(2) Any work required by the home design that cannot be completed in the factory, or when the manufacturer authorizes the retailer to provide an add-on, not including an attached garage, to the home during installation, when that work would take the home out of conformance with the construction and safety standards and then bring it back into conformance;

(3) Appliances provided by the manufacturer, installer, retailer, or purchaser, including fireplaces to be installed on site;

(4) Components or parts that are shipped loose with the manufactured home and that will be installed on-site, unless exempted as installation by the installation standards;

(5) Exterior applications such as brick siding, stucco, or tile roof systems; and

(6) Other construction such as roof extensions (dormers), site-installed windows in roofs, removable or open floor sections for basement stairs, and sidewall bay windows.

(b) The manufacturer or a licensed contractor or similarly qualified professional with prior authorization from the manufacturer may perform the on-site work in accordance with the DAPIA approvals and site completion instructions. However, the manufacturer is responsible for the adequacy of all on-site completion work regardless of who does the work, and must prepare and provide all site inspection reports, as well as the certification of completion, and must fulfill all of its responsibilities and maintain all records at the factory of origin as required by § 3282.609.

§ 3282.603 Request for approval; DAPIA review, notification, and approval.

(a) *Manufacturer's request for approval.* The manufacturer must request, in writing, and obtain approval of its DAPIA for any aspect of construction that is to be completed on-site under this subpart. The manufacturer, its IPIA, and its DAPIA must work together to reach agreements necessary to enable the request to be reviewed and approved.

(b) *DAPIA notification.* The DAPIA, acting on behalf of HUD, must notify the manufacturer of the results of the DAPIA's review of the manufacturer's request, and must retain a copy of the notification in the DAPIA's records. The DAPIA shall also forward a copy of the approval to HUD or the Secretary's agent as provided under § 3282.361(a)(4). The notification must either:

(1) Approve the request if it is consistent with this section and the objectives of the Act; or

(2) Deny the proposed on-site completion and set out the reasons for the denial.

(c) *Manner of DAPIA approval.* Notification of DAPIA approval must include, by incorporation or by listing, the information required by paragraph (d) of this section, and must be indicated by the DAPIA placing its stamp of approval or authorized signature on each page of the manufacturer's designs submitted with its request for approval. The DAPIA must include an ''SC'' designation on each page that includes an element of construction that is to be completed on-site and must include those pages as part of the approved design package.

(d) *Contents of DAPIA approval.* Any approval by the DAPIA under this section must:

(1) Include a unique site completion numeric identification for each approval for each manufacturer (*i.e.,* manufacturer name or abbreviation, SC–XX);

(2) Identify the work to be completed on-site;

(3) List all models to which the approval applies, or indicate that the approval is not model-specific;

(4) Include acceptance by the DAPIA of a quality assurance manual for on-site completion meeting the requirements of paragraph (e) of this section;

(5) Include the IPIA's written agreement to accept responsibility for completion of the necessary on-site inspections and accompanying records;

(6) Identify instructions authorized for completing the work on-site that meet the requirements of paragraph (f) of this section;

(7) Include the manufacturer's system for tracking the status of homes built under the approval until the on-site work and necessary inspections have been completed, to assure that the work is being performed properly;

(8) Include a quality control checklist to be used by the manufacturer and IPIA and approved by the DAPIA to verify that all required components, materials, labels, and instructions needed for site completion are provided in each home prior to shipment;

(9) Include an inspection checklist developed by the IPIA and manufacturer and approved by the DAPIA, that is to be used by the final site inspectors;

(10) Include a Consumer Information Notice developed by the manufacturer and approved by the DAPIA that explains the on-site completion process and identifies the work to be completed on-site; and

(11) Include any other requirements and limitations that the DAPIA deems

necessary or appropriate to accomplish the purposes of the Act.

(e) *Quality assurance manual for on-site completion requirements.* The portion of the quality assurance manual for on-site completion required by paragraph (d)(3) of this section must receive the written concurrence of the manufacturer's IPIA with regard to its acceptability and applicability to the on-site completion of the affected manufactured homes. It must include a commitment by the manufacturer to prepare a final site inspection report that will be submitted to the IPIA for its review. When appropriate, this portion of the quality assurance manual for on-site completion will be deemed a change in the manufacturer's quality assurance manual for the applicable models, in accordance with §§ 3282.203 and 3282.361.

(f) *Instructions for completion on-site.* The DAPIA must include instructions authorized for completing the work on-site as a separate part of the manufacturer's approved design package. The manufacturer must provide a copy of these instructions and the inspection checklist required by paragraph (d)(9) of this section to the IPIA for monitoring and inspection purposes.

§ 3282.604 DAPIA responsibilities.

The DAPIA, acting on behalf of HUD, for any manufacturer proceeding under this section is responsible for:

(a) Verifying that all information required by § 3282.603 has been submitted by the manufacturer;

(b) Reviewing and approving the manufacturer's designs, quality control checklist, site inspection checklist, site completion instructions, and quality assurance manuals for site work to be performed;

(c) Maintaining all records and approvals for at least 5 years;

(d) Revoking or amending its approvals in accordance with § 3282.609; and

(e) Reviewing its approvals under this section at least every 3 years or more frequently if there are changes made to the Manufactured Home Construction and Safety Standards, 24 CFR part 3280, to verify continued compliance with the Standards.

§ 3282.605 Requirements applicable to completion of construction.

(a) *Serial numbers of homes completed on-site.* The serial number of each home completed in conformance with this section must include the prefix or suffix ''SC''.

(b) *Labeling.* A manufacturer that has received a DAPIA approval under § 3282.604 may certify and label a manufactured home that is substantially completed in the manufacturer's plant at the proper completion of the in-plant production phase, even though some aspects of construction will be completed on-site in accordance with the DAPIA's approval. Any such homes or sections of such homes must have a label affixed in accordance with § 3282.362(c)(2) and be shipped with a Consumer Information Notice that meets the requirements of § 3282.606.

(c) *Site inspection.* Prior to occupancy, the manufacturer must ensure that each home is inspected on-site. The manufacturer is responsible for inspecting all aspects of construction that are completed on-site as provided in its approved designs and quality assurance manual for on-site completion.

(d) *Site inspection report.* (1) In preparing the site inspection report, the manufacturer must use the inspection checklist approved by the DAPIA in accordance with § 3282.603(d)(9), and must prepare a final site inspection report and provide a copy to the IPIA within 5 business days of completing the report. Within 5 business days after the date that the IPIA notifies the manufacturer of the IPIA's approval of the final site inspection report, the manufacturer must provide a copy of the approved report to the lessor or purchaser prior to occupancy and, as applicable, the appropriate retailer and any person or entity other than the manufacturer that performed the on-site construction work.

(2) Each approved final site inspection report must include:

(i) The name and address of the manufacturer;

(ii) The serial number of the manufactured home;

(iii) The address of the home site;

(iv) The name of the person and/or agency responsible for the manufacturer's final site inspection;

(v) The name of each person and/or agency who performs on-site inspections on behalf of the IPIA, the name of the person responsible for acceptance of the manufacturer's final on-site inspection report on behalf of the IPIA, and the IPIA's name, mailing address, and telephone number;

(vi) A description of the work performed on-site and the inspections made;

(vii) When applicable, verification that any problems noted during inspections have been corrected prior to certification of compliance; and

(viii) Certification by the manufacturer of completion in accordance with the DAPIA-approved instructions and that the home conforms with the approved design or, as appropriate under § 3282.362(a)(1)(iii), the construction and safety standards.

(3) The IPIA must review each manufacturer's final on-site inspection report and determine whether to accept that inspection report.

(i) Concurrent with the manufacturer's final site inspection, the IPIA or the IPIA's agent must inspect all of the on-site work for homes completed using an approval under this section. The IPIA must use the inspection checklist approved by the DAPIA in accordance with § 3282.603(d)(9).

(ii) If the IPIA determines that the manufacturer is not performing adequately in conformance with the approval, the IPIA must redtag and reinspect until it is satisfied that the manufacturer is conforming to the conditions included in the approval. The home may not be occupied until the manufacturer and the IPIA have provided reports, required by this section, confirming compliance with the Construction and Safety Standards.

(iii) The IPIA must notify the manufacturer of the IPIA's acceptance of the manufacturer's final site inspection report. The IPIA may indicate acceptance by issuing its own final site inspection report or by indicating, in writing, its acceptance of the manufacturer's site inspection report showing that the work completed on-site is in compliance with the DAPIA approval and the Construction and Safety Standards.

(4) Within 5 business days of the date of IPIA's notification to the manufacturer of the acceptance of its final site inspection report, the manufacturer must provide to the purchaser or lessor, as applicable, the manufacturer's final site inspection report. For purposes of establishing the manufacturer's and retailer's responsibilities under the Act and subparts F and I of this part, the sale or lease of the manufactured home will not be considered complete until the purchaser or lessor, as applicable, has been provided with the report.

(e) *Report to HUD.* (1) The manufacturer must report to HUD through its IPIA, on the manufacturer's monthly production report required in accordance with § 3282.552, the serial number and site completion numeric identification (see § 3282.603(d)(1)) of each home produced under an approval issued pursuant to this section.

(2) The report must be consistent with the DAPIA approval issued pursuant to this section.

(3) The manufacturer must submit a copy of the report, or a separate listing

of all information provided on each report for homes that are completed under an approval issued pursuant to this section, to the SAAs of the States where the home is substantially completed in the factory and where the home is sited, as applicable.

§ 3282.606 Consumer information.

(a) *Notice.* Any home completed under the procedures established in this section must be shipped with a temporary notice that explains that the home will comply with the requirements of the construction and safety standards only after all of the site work has been completed and inspected. The notice must be legible and typed, using letters at least 1/4 inch high in the text of the notice and 3/4 inch high for the title. The notice must read as follows:

IMPORTANT CONSUMER INFORMATION NOTICE

WARNING: DO NOT LIVE IN THIS HOME UNTIL THE ON–SITE WORK HAS BEEN COMPLETED AND THE MANUFACTURER HAS PROVIDED A COPY OF THE INSPECTION REPORT THAT CERTIFIES THAT THE HOME HAS BEEN INSPECTED AND IS CONSTRUCTED IN ACCORDANCE WITH APPROVED INSTRUCTIONS FOR MEETING THE CONSTRUCTION AND SAFETY STANDARDS.

This home has been substantially completed at the factory and certified as having been constructed in conformance with the Federal Manufactured Home Construction and Safety Standards when specified work is performed and inspected at the home site. This on-site work must be performed in accordance with manufacturer's instructions that have been approved for this purpose. The work to be performed on-site is [insert description of all work to be performed in accordance with the construction and safety standards].

This notice may be removed by the purchaser or lessor when the manufacturer provides the first purchaser or lessor with a copy of the manufacturer's final site inspection report, as required by regulation. This final report must include the manufacturer's certification of completion. All manufactured homes may also be subject to separate regulations requiring approval of items not covered by the Federal Manufactured Home Construction and Safety Standards, such as installation and utility connections.

(b) *Placement of notice in home.* The notice required by paragraph (a) of this section must be displayed in a conspicuous and prominent location within the manufactured home and in a manner likely to assure that it is not removed until, or under the authorization of, the purchaser or lessor. The notice is to be removed only by the first purchaser or lessor. No retailer, installation or construction contractor, or other person may interfere with the required display of the notice.

(c) *Providing notice before sale.* The manufacturer or retailer must also provide a copy of the Consumer Information Notice to prospective purchasers of any home to which the approval applies before the purchasers enter into an agreement to purchase the home.

(d) *When sale or lease of home is complete.* For purposes of establishing the manufacturer's and retailer's responsibilities for on-site completion under the Act and subparts F and I of this part, the sale or lease of the manufactured home will not be considered complete until the purchaser or lessor, as applicable, has been provided with a copy of the final site inspection report required under § 3282.605(d) and a copy of the manufacturer's certification of completion required under § 3282.609(k) and (l). For 5 years from the date of the sale or lease of each home, the manufacturer must maintain in its records an indication that the final on-site inspection report and certification of completion has been provided to the lessor or purchaser and, as applicable, the appropriate retailer.

§ 3282.607 IPIA responsibilities.

The IPIA, acting on behalf of HUD, for any manufacturer proceeding under this section is responsible for:

(a) Working with the manufacturer and the manufacturer's DAPIA to incorporate into the DAPIA-approved quality assurance manual for on-site completion any changes that are necessary to ensure that homes completed on-site conform to the requirements of this section;

(b) Providing the manufacturer with a supply of the labels described in this section, in accordance with the requirements of § 3282.362(c)(2)(i)(A);

(c) Overseeing the effectiveness of the manufacturer's quality control system for assuring that on-site work is completed to the DAPIA-approved designs, which must include:

(1) Verifying that the manufacturer's quality control manual at the installation site is functioning and being followed;

(2) Monitoring the manufacturer's system for tracking the status of each home built under the approval until the on-site work and necessary inspections have been completed;

(3) Reviewing all of the manufacturer's final on-site inspection reports; and

(4) Inspecting all of the on-site construction work for each home utilizing an IPIA inspector or an independent qualified third-party inspector acceptable to the IPIA and acting as the designee or representative:

(i) Prior to close-up, unless access panels are provided to allow the work to be inspected after all work is completed on-site; and

(ii) After all work is completed on-site, except for close-up;

(d) Designating an IPIA inspector or an independent qualified third-party inspector acceptable to the IPIA, as set forth under § 3282.358(d), who is not associated with the manufacturer and is not involved with the site construction or completion of the home and is free of any conflict of interest in accordance with § 3282.359, to inspect the work done on-site for the purpose of determining compliance with:

(1) The approved design or, as appropriate under § 3282.362(a)(1)(iii), the Construction and Safety Standards; and

(2) The DAPIA-approved quality assurance manual for on-site completion applicable to the labeling and completion of the affected manufactured homes;

(e) Notifying the manufacturer of the IPIA's acceptance of the manufacturer's final site inspection report (see § 3282.605(d)(3)(iii));

(f) Preparing final site inspection reports and providing notification to the manufacturer of its acceptance of the manufacturer's final site inspection report within 5 business days of preparing its report. The IPIA is to maintain its final site inspection reports and those of the manufacturer for a period of at least 5 years. All reports must be available for HUD and SAA review in the IPIA's central record office as part of the labeling records; and

(g) Reporting to HUD, the DAPIA, and the manufacturer if one or more homes has not been site inspected prior to occupancy or when arrangements for one or more manufactured homes to be site inspected have not been made.

§ 3282.608 Manufacturer responsibilities.

A manufacturer proceeding under this section is responsible for:

(a) Obtaining DAPIA approval for completion of construction on-site, in accordance with § 3282.603;

(b) Obtaining the IPIA's agreement to perform on-site inspections as necessary under this section and the terms of the DAPIA's approval;

(c) Notifying the IPIA that the home is ready for inspection;

(d) Paying the IPIA's costs for performing on-site inspections of work completed under this section;

(e) Either before or at the time on-site work commences, providing the IPIA

with a copy of any applicable DAPIA-approved quality assurance manual for on-site completion, the approved instructions for completing the construction work on-site, and an approved inspection checklist, and maintaining this information on the job site until all on-site work is completed and accepted by the IPIA;

(f) Satisfactorily completing all on-site construction and required repairs or authorizing a licensed contractor or similarly qualified person to complete all site construction and any needed repairs;

(g) Providing a written certification to the lessor or purchaser, when all site construction work is completed, that each home, to the best of the manufacturer's knowledge and belief, is constructed in conformance with the Construction and Safety Standards;

(h) Ensuring that the consumer notification requirements of § 3282.606 are met for any home completed under this subpart;

(i) Maintaining a system for tracking the status of homes built under the approval until the on-site work and necessary inspections have been completed, such that the system will assure that the work is performed in accordance with the quality control manual and other conditions of the approval;

(j) Ensuring performance of all work as necessary to assure compliance with the Construction and Safety Standards upon completion of the site work, including § 3280.303(b) of this chapter, regardless of who does the work or where the work is completed;

(k) Preparing a site inspection report upon completion of the work on-site, certifying completion in accordance with DAPIA-approved instruction and that the home conforms with the approved design or, as appropriate under § 3282.362(a)(1)(iii), the construction and safety standards;

(l) Arranging for an on-site inspection of each home upon completion of the on-site work by the IPIA or its authorized designee prior to occupancy to verify compliance of the work with the DAPIA-approved designs and the Construction and Safety Standards;

(m) Providing its final on-site inspection report and certification of completion to the IPIA and, after approval, to the lessor or purchaser and, as applicable, the appropriate retailer, and to the SAA upon request;

(n) Maintaining in its records the approval notification from the DAPIA, the manufacturer's final on-site inspection report and certification of completion, and the IPIA's acceptance of the final site inspection report and certification, and making all such records available for review by HUD in the factory of origin;

(o) Reporting to HUD or its agent the serial numbers assigned to each home completed in conformance with this section and as required by § 3282.552; and

(p) Providing cumulative quarterly production reports to HUD or its agent that include the site completion numeric identification number(s) for each home (see § 3282.603(d)(1)); the serial number(s) for each home; the HUD label number(s) assigned to each home; the retailer's name and address for each home; the name, address, and phone number for each home purchaser; the dates of the final site completion inspection for each home; and whether each home was inspected prior to occupancy.

(q) Maintaining copies of all records for on-site completion for each home, as required by this section, in the unit file to be maintained by the manufacturer.

§ 3282.609 Revocation or amendment of DAPIA approval.

(a) The DAPIA that issued an approval or the Secretary may revoke or amend, prospectively, an approval notification issued under § 3282.603. The approval may be revoked or amended whenever the DAPIA or HUD determines that:

(1) The manufacturer is not complying with the terms of the approval or the requirements of this section;

(2) The approval was not issued in conformance with the requirements of § 3282.603;

(3) A home produced under the approval fails to comply with the Federal construction and safety standards or contains an imminent safety hazard; or

(4) The manufacturer fails to make arrangements for one or more manufactured homes to be inspected by the IPIA prior to occupancy.

(b) The DAPIA must immediately notify the manufacturer, the IPIA, and HUD of any revocation or amendment of DAPIA approval.

§ 3282.610 Failure to comply with the procedures of this subpart.

In addition to other sanctions available under the Act and this part, HUD may prohibit any manufacturer or PIA found to be in violation of the requirements of this section from carrying out their functions of this Subpart in the future, after providing an opportunity for an informal presentation of views in accordance with § 3282.152(f). Repeated infractions of the requirements of this section may be grounds for the suspension or disqualification of a PIA under §§ 3282.355 and 3282.356.

§ 3282.611 Compliance with this subpart.

If the manufacturer and IPIA, as applicable, complies with the requirements of this section and the home complies with the construction and safety standards for those aspects of construction covered by the DAPIA approval, then HUD will consider a manufacturer or retailer that has permitted a manufactured home approved for on-site completion under this section to be sold, leased, offered for sale or lease, introduced, delivered, or imported to be in compliance with the certification requirements of the Act and the applicable implementing regulations in this part 3282 for those aspects of construction covered by the approval.

PART 3285—MODEL MANUFACTURED HOME INSTALLATION STANDARDS

■ 13. The authority citation for 24 CFR part 3285 continues to read as follows:

Authority: 42 U.S.C. 3535(d), 5403, 5404, and 5424.

■ 14. In § 3285.5, in alphabetic order, add definitions for ''*peak cap construction*'' and ''*peak flip construction*'' to read as follows:

§ 3285.5 Definitions.

* * * * *

Peak cap construction means any roof peak construction that is either shipped loose or site constructed and is site installed to complete the roof ridge/peak of a home.

Peak flip construction means any roof peak construction that requires the joining of two or more cut top chord members on site. The cut top chords must be joined at the factory by straps, hinges, or other means.

* * * * *

■ 15. In § 3285.801, revise paragraph (f)(2) to read as follows:

§ 3285.801 Exterior close-up.

* * * * *

(f) * * *

(2) In which the roof pitch of the hinged roof is less than 7:12, including designs incorporating peak cap construction or peak flip construction; and

* * * * *

Dated: August 25, 2015.

Edward L. Golding,

Principal Deputy Assistant Secretary for Housing.

Approved: August 25, 2015.

Laura H. Hogshead,

Chief Operating Officer.

[FR Doc. 2015–21774 Filed 9–4–15; 8:45 am]

BILLING CODE 4210–67–P

DEPARTMENT OF THE TREASURY

Internal Revenue Service

26 CFR Part 1

[TD 9736]

RIN 1545–BK98

Integrated Hedging Transactions of Qualifying Debt

AGENCY: Internal Revenue Service (IRS), Treasury.

ACTION: Final regulations and removal of temporary regulations.

SUMMARY: This document contains final regulations that address certain integrated transactions that involve a foreign currency denominated debt instrument and multiple associated hedging transactions. The regulations provide that if a taxpayer has identified multiple hedges as being part of a qualified hedging transaction, and the taxpayer has terminated at least one but less than all of the hedges (including a portion of one or more of the hedges), the taxpayer must treat the remaining hedges as having been sold for fair market value on the date of disposition of the terminated hedge.

DATES: *Effective Date.* These regulations are effective on *September 8, 2015.*

Applicability Date. These regulations apply to leg-outs within the meaning of § 1.988–5(a)(6)(ii) that occur on or after September 6, 2012.

FOR FURTHER INFORMATION CONTACT: Sheila Ramaswamy, at (202) 317–6938 (not a toll-free number).

SUPPLEMENTARY INFORMATION:

Background

On September 5, 2012, the Treasury Department and the IRS issued temporary regulations (TD 9598) (the ''Temporary Regulations'') that revised the legging out rules of § 1.988–5(a)(6)(ii) applicable to hedging transactions under section 988(d). No public hearing was requested or held. One comment was received, which is available at *www.regulations.gov* or upon request. After consideration of the comment, the Temporary Regulations are adopted as final regulations without substantive change. The Temporary Regulations are removed.

Summary of Comments and Explanation of Revisions

The only comment received on the Temporary Regulations suggested that the promulgation of the Temporary Regulations was unnecessary because the prior regulations did not support the taxpayer reporting position that the Temporary Regulations were designed to prevent. The comment considered the taxpayer position addressed in the Temporary Regulations to be inconsistent with both the purposes of section 988(d) and the economic substance of the transaction. Although the comment finds the Temporary Regulations ultimately unnecessary, it acknowledges that the section 988 hedging rules are a complicated area of law and that the prior regulations could be improved to provide greater certainty to taxpayers. The Treasury Department and the IRS have determined that the Temporary Regulations are useful in clarifying the section 988(d) integration rules—as well as in preventing unintended approaches to legging out under those rules—and thus should be adopted as final.

The comment recommended that the Treasury Department and the IRS consider aligning the hedge integration regime under section 988 with the approach taken in regulations under section 1275 on the basis that the section 1275 approach is more consistent with economic reality. The § 1.1275–6 regulations generally allow the integration of a qualifying debt instrument with a hedge or combination of hedges if the combined cash flows of the components are substantially equivalent to the cash flows on a fixed or variable rate debt instrument. However, a financial instrument that hedges currency risk cannot be integrated as a § 1.1275–6 hedge. *See* § 1.1275–6(b)(2). Under the legging out rules of § 1.1275–6, a taxpayer that legs out of an integrated transaction is treated as terminating the synthetic debt instrument for its fair market value and recognizing any gain or loss. If the taxpayer remains liable on the qualifying debt instrument after the leg-out, adjustments are made to reflect any difference between the fair market value of the qualifying debt instrument and its adjusted issue price. If the taxpayer remains a party to the § 1.1275–6 hedge, the hedge is treated as entered into at its fair market value. By contrast, subject to § 1.988–5T(a)(6)(ii)(F), the legging out rules under § 1.988–5 treat a taxpayer that legs out of a synthetic debt instrument under section 988 as having disposed of any remaining hedges, and those hedges cannot be part of a qualified hedging transaction for any period after the leg-out date.

The Treasury Department and the IRS have determined that achieving greater alignment between the hedge integration regimes under sections 988 and 1275 is beyond the scope of this project and unnecessary to achieve the purpose of the Temporary Regulations. The limited purpose of the Temporary Regulations was to clarify the application of the legging out rules under § 1.988–5 to a particular fact pattern rather than to undertake a more general revision of those rules. When some of the hedge components of a qualified hedging transaction are disposed of on a leg-out date, deeming a disposition of all remaining components is sufficient to achieve a clear reflection of income. Continuing to treat the remaining components as integrated, as under the rule of § 1.1275–6, would represent a departure from the approach taken in the original § 1.988–5 regulations. Nonetheless, the Treasury Department and the IRS will continue to consider whether the hedge integration regimes under sections 988 and 1275 should be modified and brought into closer conformity.

As further support for the recommendation to achieve better alignment between §§ 1.988–5 and 1.1275–6, the comment also suggested that the provision in § 1.988–5T(a)(6)(ii)(F) of the Temporary Regulations, which was also included in the prior final regulations, would be unnecessary if the regulations were modified to conform to § 1.1275–6. Under § 1.988–5T(a)(6)(ii)(F), if a taxpayer legs out of a qualified hedging transaction and realizes a gain with respect to the debt instrument or hedge that is disposed of or otherwise terminated, then the taxpayer is not treated as legging out if during the period beginning 30 days before the leg-out date and ending 30 days after that date the taxpayer enters into another transaction that, taken together with any remaining components of the hedge, hedges at least 50 percent of the remaining currency flow with respect to the qualifying debt instrument that was part of the qualified hedging transaction. Section 1.988–5T(a)(6)(ii)(F) also provides a similar rule where a taxpayer has a qualified hedging transaction comprised of multiple components. In such a case, the taxpayer will not be treated as legging out of the qualified hedging transaction if the taxpayer terminates all or a part of one or more of the components and

realizes a net gain with respect to the terminated component, components, or portions thereof, provided that the remaining components of the hedge by themselves hedge at least 50 percent of the remaining currency flow with respect to the qualifying debt instrument that was part of the qualified hedging transaction.

The comment suggests that this provision of the section 988 hedging rules is unnecessarily complex, as well as incomplete because it does not cover situations in which, upon legging out, a taxpayer recognizes a loss on the debt instrument or hedge that is disposed of or otherwise terminated. However, as stated in this preamble, in issuing the Temporary Regulations, the Treasury Department and the IRS only sought to clarify the application of the section 988 hedging rules to a particular fact pattern and did not seek to undertake a more general revision of those rules. Accordingly, the Treasury Department and the IRS have determined that modifications to § 1.988–5T(a)(6)(ii)(F) are beyond the scope of this guidance project. However, the Treasury Department and the IRS will continue to consider whether any modifications to the rule are necessary or appropriate.

Finally, the comment also recommended that, even if the final regulations do not adopt the recommendation to align with the approach taken in § 1.1275–6, the Temporary Regulations should be modified to provide that, when an issuer of a qualifying debt instrument legs out but continues to be the obligor on the qualifying debt instrument, the issuer should be deemed to repurchase and reissue the debt instrument for its then fair market value. The Temporary Regulations instead provide that, in such a case, the debt instrument is ''treated as sold for its fair market value.'' The comment notes that the sale of a debt instrument has no tax consequences for the issuer of the instrument. The Treasury Department and the IRS agree that this aspect of the Temporary Regulations should be modified and, for the sake of consistency, these final regulations adopt the phrasing ''treated as sold or otherwise terminated by the taxpayer for its fair market value,'' which is used in § 1.988–5(a)(6)(i)(C) (regarding legging in).

The final regulations also update the dates in two existing examples, to be consistent with the applicability date of the revised legging out rules. Additionally, the final regulations reflect minor wording changes to the Temporary Regulations for purposes of improving clarity. The Treasury Department and the IRS do not intend these changes to be interpreted as substantive changes to the Temporary Regulations.

Special Analyses

Certain IRS regulations, including this one, are exempt from the requirements of Executive Order 12866, as supplemented and reaffirmed by Executive Order 13563. Therefore, a regulatory impact assessment is not required. It has also been determined that section 553(b) of the Administrative Procedure Act (5 U.S.C. chapter 5) does not apply to these regulations. It is hereby certified that these regulations will not have a significant impact on a substantial number of small entities. This certification is based upon the fact that these regulations merely clarify an existing standard and do not impose a collection of information on small entities. Accordingly, a Regulatory Flexibility Analysis under the Regulatory Flexibility Act (5 U.S.C. chapter 6) is not required. Pursuant to section 7805(f) of the Internal Revenue Code, the notice of proposed rulemaking preceding this regulation was submitted to the Chief Counsel for Advocacy of the Small Business Administration for comment on its impact on small business.

Drafting Information

The principal author of these regulations is Sheila Ramaswamy, Office of Associate Chief Counsel (International). However, other personnel from the IRS and the Treasury Department participated in their development.

List of Subjects in 26 CFR Part 1

Income taxes, Reporting and recordkeeping requirements.

Adoptions of Amendment to the Regulations

Accordingly, 26 CFR part 1 is amended as follows:

PART 1—INCOME TAXES

■ **Paragraph 1.** The authority citation for part 1 continues to read in part as follows:

Authority: 26 U.S.C. 7805 * * *

Par. 2. Section 1.988–5 is amended by:

■ 1. Revising paragraph (a)(6)(ii).

■ 2. Adding *Example 11* to paragraph (a)(9)(iv).

■ 3. Revising paragraph (a)(10)(iv).

The revisions and addition read as follows:

§ 1.988–5 Section 988(d) hedging transactions.

(a) * * *

(6) * * *

(ii) *Legging out.* With respect to a qualifying debt instrument and hedge that are properly identified as a qualified hedging transaction, ''legging out'' of integrated treatment under this paragraph (a) means that the taxpayer disposes of or otherwise terminates all or any portion of the qualifying debt instrument or the hedge before maturity of the qualified hedging transaction. For purposes of the preceding sentence, if the taxpayer changes a material term of the qualifying debt instrument (for example, exercises an option to change the interest rate or index, or the maturity date) or the hedge (for example, changes the interest or exchange rates underlying the hedge, or the expiration date) before maturity of the qualified hedging transaction, the taxpayer will be deemed to have disposed of or otherwise terminated all or any portion of the qualifying debt instrument or the hedge, as applicable. A taxpayer that disposes of or terminates a qualified hedging transaction (that is, disposes of or terminates both the qualifying debt instrument and the hedge in their entirety on the same day) is considered to have disposed of or otherwise terminated the synthetic debt instrument rather than legging out. See paragraph (a)(9)(iv) of this section, *Example 10* for an illustration of this rule. If a taxpayer legs out of integrated treatment, the following rules apply:

(A) The transaction will be treated as a qualified hedging transaction during the time the requirements of this paragraph (a) were satisfied.

(B) If all of the instruments comprising the hedge (each such instrument, a component) are disposed of or otherwise terminated, the qualifying debt instrument is treated as sold or otherwise terminated by the taxpayer for its fair market value on the date the hedge is disposed of or otherwise terminated (the leg-out date), and any gain or loss (including gain or loss resulting from factors other than movements in exchange rates) from the identification date to the leg-out date is realized and recognized on the leg-out date. The spot rate on the leg-out date is used to determine exchange gain or loss on the debt instrument for the period beginning on the leg-out date and ending on the date such instrument matures or is disposed of or otherwise terminated. Proper adjustment must be made to reflect any gain or loss taken into account. The netting rule of § 1.988–2(b)(8) applies. See paragraph

(a)(9)(iv) of this section, *Example 4* and *Example 5* for an illustration of this rule.

(C) If a hedge has more than one component (and such components have been properly identified as being part of the qualified hedging transaction) and at least one but not all of the components that comprise the hedge has been disposed of or otherwise terminated, or if part of any component of the hedge has been terminated (whether a hedge consists of a single or multiple components), the date such component (or part thereof) is disposed of or terminated is considered the leg-out date and the qualifying debt instrument is treated as sold or otherwise terminated by the taxpayer for its fair market value in accordance with the rules of paragraph (a)(6)(ii)(B) of this section on such leg-out date. In addition, all of the remaining components (or parts thereof) that have not been disposed of or otherwise terminated are treated as sold by the taxpayer for their fair market value on the leg-out date, and any gain or loss from the identification date to the leg-out date is realized and recognized on the leg-out date. To the extent relevant, the spot rate on the leg-out date is used to determine exchange gain or loss on the remaining components (or parts thereof) for the period beginning on the leg-out date and ending on the date such components (or parts thereof) are disposed of or otherwise terminated. See paragraph (a)(9)(iv) of this section, *Example 11* for an illustration of this rule.

(D) If the qualifying debt instrument is disposed of or otherwise terminated in whole or in part, the date of such disposition or termination is considered the leg-out date. Accordingly, the hedge (including all components making up the hedge in their entirety) that is part of the qualified hedging transaction is treated as sold by the taxpayer for its fair market value on the leg-out date, and any gain or loss from the identification date to the leg-out date is realized and recognized on the leg-out date. To the extent relevant, the spot rate on the leg-out date is used to determine exchange gain or loss on the hedge (including all components thereof) for the period beginning on the leg-out date and ending on the date such hedge is disposed of or otherwise terminated.

(E) Except as provided in paragraph (a)(8)(iii) of this section (regarding identification by the Commissioner), the part of the qualified hedging transaction that has not been disposed of or otherwise terminated (that is, the remaining debt instrument in its entirety even if partially hedged, or the remaining components of the hedge) cannot be part of a qualified hedging transaction for any period after the leg-out date.

(F) If a taxpayer legs out of a qualified hedging transaction and realizes a net gain with respect to the debt instrument that is disposed of or otherwise terminated, then paragraph (a)(6)(ii)(B), (C), and (D) of this section, as appropriate, will not apply if during the period beginning 30 days before the leg-out date and ending 30 days after that date the taxpayer enters into another transaction that, taken together with any remaining components of the hedge, hedges at least 50 percent of the remaining currency flow with respect to the qualifying debt instrument that was part of the qualified hedging transaction or, if appropriate, an equivalent amount under the hedge (or any remaining components thereof) that was part of the qualified hedging transaction. Similarly, in a case in which a hedge has multiple components that are part of a qualified hedging transaction, if the taxpayer legs out of a qualified hedging transaction by terminating one such component or a part of one or more such components and realizes a net gain with respect to the terminated component, components, or portions thereof, then paragraphs (a)(6)(ii)(B), (C), and (D) of this section, as appropriate, will not apply if the remaining components of the hedge (including parts thereof) by themselves hedge at least 50 percent of the remaining currency flow with respect to the qualifying debt instrument that was part of the qualified hedging transaction. See paragraph (a)(9)(iv) of this section, *Example 11* for an illustration of this rule.

* * * * *

(9) * * *

(iv) * * *

Example 11. (i) K is a domestic corporation with the U.S. dollar as its functional currency. On January 1, 2013, K borrows 100 British pounds (£) for two years at a 10% rate of interest payable on December 31 of each year with no principal payment due until maturity on December 31, 2014. Assume that the spot rate on January 1, 2013, is £1=$1. On the same date, K enters into two swap contracts with an unrelated counterparty that economically results in the transformation of the fixed rate £100 borrowing to a floating rate dollar borrowing. The terms of the swaps are as follows:

(A) *Swap #1, Currency swap.* On January 1, 2013, K will exchange £100 for $100.

(*1*) On December 31 of both 2013 and 2014, K will exchange $8 for £10;

(*2*) On December 31, 2014, K will exchange $100 for £100.

(B) *Swap #2, Interest rate swap.* On December 31 of both 2013 and 2014, K will pay LIBOR times a notional principal amount of $100 and will receive 8% times the same $100 notional principal amount.

(ii) Assume that K properly identifies the pound borrowing and the swap contracts as a qualified hedging transaction as provided in paragraph (a)(8)(i) of this section and that the other relevant requirements of paragraph (a) of this section are satisfied.

(iii) On January 1, 2014, the spot exchange rate is £1=$2; the U.S. dollar LIBOR rate of interest is 9%; the market value of K's note in pounds has not changed; and K terminates swap #2. Because interest rates have increased from 8% to 9%, K will incur a loss of ($.92) (the present value of the ($1) difference between the 8% and 9% interest payments discounted at the current interest rate of 9%) with respect to the termination of such swap on January 1, 2014. Pursuant to paragraph (a)(6)(ii)(C) of this section, K must treat swap #1 as having been sold for its fair market value on the leg-out date, which is the date swap #2 is terminated. K must realize and recognize gain of $100.92 (the present value of £110 discounted in pounds to equal £100 × $2 ($200) less the present value of $108 ($99.08)). The loss inherent in the pound borrowing from January 1, 2013 to January 1, 2014 is realized and recognized on January 1, 2014. Such loss is exchange loss in the amount of $100 (the present value of £110 that was to be paid at the end of the year discounted at pound interest rates to equal £100 times the change in exchange rates: (£100 × $1, the spot rate on January 1, 2013) − (£100 × $2, the spot rate on January 1, 2014)). Pursuant to paragraph (a)(6)(ii)(E) of this section, except as provided in paragraph (a)(8)(iii) of this section (regarding identification by the Commissioner), the pound borrowing and currency swap cannot be part of a qualified hedging transaction for any period after the leg-out date.

(iv) Assume the facts are the same as in paragraph (iii) of this *Example* except that on January 1, 2014, the U.S. dollar LIBOR rate of interest is 7% rather than 9%. When K terminates swap #2, K will realize gain of $0.93 (the present value of the ($1) difference between the 8% and 7% interest payments discounted at the current interest rate of 7%) received with respect to the termination on January 1, 2014. Fifty percent or more of the remaining pound cash flow of the pound borrowing remains hedged after the termination of swap #2. Accordingly, under paragraph (a)(6)(ii)(F) of this section, paragraphs (a)(6)(ii)(B) and (C) of this section do not apply, and the gain on swap #1 and the loss on the qualifying debt instrument are not taken into account. Thus, K will include in income $0.93 realized from the termination of swap #2.

(10) * * *

(iv) *Effective/applicability dates for legging in and legging out rules.* (A) The rules of paragraph (a)(6)(i) of this section are effective for qualified hedging transactions that are legged into after March 17, 1992.

(B) The rules of paragraph (a)(6)(ii) and *Example 11* of paragraph (a)(9)(iv)

of this section apply to leg-outs that occur on or after September 6, 2012.

* * * * *

§ 1.988–5 [Amended]

■ **Par. 3.** For each section listed in the table, remove the language in the ''Remove'' column and add in its place the language in the ''Add'' column as set forth below:

Section	Remove	Add
§ 1.988–5(a)(9)(iv), Example 4, paragraph (i), second, third and fourth sentences.	January 1, 1990	January 1, 2013.
§ 1.988–5(a)(9)(iv), Example 4, paragraph (i), table	December 31, 1990	December 31, 2013.
§ 1.988–5(a)(9)(iv), Example 4, paragraph (i), table	December 31, 1991	December 31, 2014.
§ 1.988–5(a)(9)(iv), Example 4, paragraph (i), table	December 31, 1992	December 31, 2015.
§ 1.988–5(a)(9)(iv), Example 4, paragraph (iii)(B)	1990	2013.
§ 1.988–5(a)(9)(iv), Example 4, paragraph (iii)(B)	1991	2014.
§ 1.988–5(a)(9)(iv), Example 4, paragraph (iii)(B)	1992	2015.
§ 1.988–5(a)(9)(iv), Example 4, paragraph (iii)(D), second sentence	1992	2015.
§ 1.988–5(a)(9)(iv), Example 4, paragraph (iv), first, second, fourth, fifth, and sixth sentences.	January 1, 1991	January 1, 2014.
§ 1.988–5(a)(9)(iv), Example 4, paragraph (iv), first, fourth, and fifth sentences.	January 1, 1990	January 1, 2013.
§ 1.988–5(a)(9)(iv), Example 4, paragraph (iv), third sentence	1990	2013.
§ 1.988–5(a)(9)(iv), Example 4, paragraph (iv), sixth and seventh sentences.	December 31, 1992	December 31, 2015.
§ 1.988–5(a)(9)(iv), Example 5, paragraph (i), second, fourth, and fifth sentences.	January 1, 1990	January 1, 2013.
§ 1.988–5(a)(9)(iv), Example 5, paragraph (i), table	December 31, 1990	December 31, 2013.
§ 1.988–5(a)(9)(iv), Example 5, paragraph (i), table	December 31, 1991	December 31, 2014.
§ 1.988–5(a)(9)(iv), Example 5, paragraph (i), table	December 31, 1992	December 31, 2015.
§ 1.988–5(a)(9)(iv), Example 5, paragraph (ii), second and third sentences.	January 1, 1991	January 1, 2014.
§ 1.988–5(a)(9)(iv), Example 5, paragraph (ii), second sentence	January 1, 1990	January 1, 2013.
§ 1.988–5(a)(9)(iv), Example 5, paragraph (ii), third sentence	December 31, 1991	December 31, 2014.
§ 1.988–5(a)(9)(iv), Example 5, paragraph (ii), third sentence	December 31, 1992	December 31, 2015.
§ 1.988–5(a)(9)(iv), Example 5, paragraph (ii), third sentence	1991	2014.
§ 1.988–5(a)(9)(iv), Example 5, paragraph (ii), third sentence	1992	2015.
§ 1.988–5(a)(9)(iv), Example 5, paragraph (iii), second sentence	January 1, 1990	January 1, 2013.
§ 1.988–5(a)(9)(iv), Example 5, paragraph (iii), second sentence	January 1, 1991	January 1, 2014.
§ 1.988–5(a)(9)(iv), Example 5, paragraph (iii)(B)	1990	2013.
§ 1.988–5(a)(9)(iv), Example 5, paragraph (iii)(B)	1991	2014.
§ 1.988–5(a)(9)(iv), Example 5, paragraph (iii)(B)	1992	2015.
§ 1.988–5(a)(9)(iv), Example 5, paragraph (iii)(C), first sentence	1990	2013.
§ 1.988–5(a)(9)(iv), Example 5, paragraph (iii)(C), first sentence	1991	2014.
§ 1.988–5(a)(9)(iv), Example 5, paragraph (iii)(C), first sentence	1992	2015.
§ 1.988–5(a)(9)(iv), Example 5, paragraph (iii)(D), second sentence	1990	2013.
§ 1.988–5(a)(9)(iv), Example 5, paragraph (iv), first, second, third, and sixth sentences.	January 1, 1991	January 1, 2014.
§ 1.988–5(a)(9)(iv), Example 5, paragraph (iv), fourth sentence	1990	2013.

§ 1.988–5T [Removed]

■ **Par. 4.** Section 1.988–5T is removed.

John Dalrymple,

Deputy Commissioner for Services and Enforcement.

Approved: August 25, 2015.

Mark J. Mazur,

Assistant Secretary of the Treasury (Tax Policy).

[FR Doc. 2015–22554 Filed 9–3–15; 4:15 pm]

BILLING CODE 4830–01–P

ENVIRONMENTAL PROTECTION AGENCY

40 CFR Part 52

[EPA–R10–OAR–2015–0447; FRL–9933–43–Region 10]

Approval and Promulgation of State Implementation Plans; Alaska; Transportation Conformity State Implementation Plan

AGENCY: Environmental Protection Agency (EPA).

ACTION: Direct final rule.

SUMMARY: The Environmental Protection Agency (EPA) is approving a State Implementation Plan (SIP) revision submitted by the State of Alaska (the State). The submission addresses transportation conformity and general conformity requirements. The EPA is approving the submission in accordance with the requirements of the Clean Air Act (the Act).

DATES: This rule is effective on November 9, 2015, without further notice, unless the EPA receives adverse comment by October 8, 2015. If the EPA receives adverse comment, we will publish a timely withdrawal in the **Federal Register** informing the public that the rule will not take effect.

ADDRESSES: Submit your comments, identified by Docket ID No. EPA–R10–OAR–2015–0447, by any of the following methods:

- *www.regulations.gov:* Follow the on-line instructions for submitting comments.
- *Email: pepple.karl@epa.gov*
- *Mail:* Karl Pepple, EPA Region 10, Office of Air, Waste and Toxics, AWT–150, 1200 Sixth Avenue, Suite 900, Seattle, WA 98101
- *Hand Delivery/Courier:* EPA Region 10, 1200 Sixth Avenue, Suite 900,

Seattle, WA 98101. Attention: Karl Pepple, Office of Air, Waste and Toxics, AWT–150. Such deliveries are only accepted during normal hours of operation, and special arrangements should be made for deliveries of boxed information.

Instructions: Direct your comments to Docket ID No. EPA–R10–OAR–2015–0447. The EPA's policy is that all comments received will be included in the public docket without change and may be made available online at *www.regulations.gov,* including any personal information provided, unless the comment includes information claimed to be Confidential Business Information (CBI) or other information whose disclosure is restricted by statute. Do not submit information that you consider to be CBI or otherwise protected through *www.regulations.gov* or email. The *www.regulations.gov* Web site is an ''anonymous access'' system, which means the EPA will not know your identity or contact information unless you provide it in the body of your comment. If you send an email comment directly to the EPA without going through *www.regulations.gov* your email address will be automatically captured and included as part of the comment that is placed in the public docket and made available on the Internet. If you submit an electronic comment, the EPA recommends that you include your name and other contact information in the body of your comment and with any disk or CD–ROM you submit. If the EPA cannot read your comment due to technical difficulties and cannot contact you for clarification, the EPA may not be able to consider your comment. Electronic files should avoid the use of special characters, any form of encryption, and be free of any defects or viruses.

Docket: All documents in the docket are listed in the *www.regulations.gov* index. Although listed in the index, some information is not publicly available, *e.g.,* CBI or other information whose disclosure is restricted by statute. Certain other material, such as copyrighted material, is not placed on the Internet and will be publicly available only in hard copy. Publicly available docket materials are available either electronically in *www.regulations.gov* or in hard copy during normal business hours at the Office of Air, Waste and Toxics, EPA Region 10, 1200 Sixth Avenue, Seattle WA 98101.

FOR FURTHER INFORMATION CONTACT: Karl Pepple at telephone number: (206) 553–1778, email address: *pepple.karl@epa.gov,* or the above EPA, Region 10 address.

SUPPLEMENTARY INFORMATION: Throughout this document wherever ''we'', ''us'' or ''our'' is used, it is intended to refer to the EPA. Information is organized as follows:

Table of Contents

I. Background
II. What is the EPA's analysis of the state's submittal?
III. Final Action
IV. Incorporation by Reference
V. Statutory and Executive Order Reviews

I. Background

On September 27, 1995, the EPA approved the general conformity rules in Article 7 of the Alaska Administrative Code (AAC) Title 18, Chapter 50 into the Alaska SIP (60 FR 49765). General conformity is a requirement of section 176(c) of the CAA to ensure that no federally supported actions outside of highway and transit projects interfere with the purpose of the approved SIP, *i.e.* the SIP's protection of the national ambient air quality standards (NAAQS). General conformity requirements currently apply to the following criteria pollutants: Ozone, particulate matter, carbon monoxide, and nitrogen dioxide. The general conformity regulation is found in 40 CFR part 93, subpart B and in 40 CFR 51.851.

On December 29, 1999, the EPA approved the transportation conformity rules in Article 7 of the Alaska Administrative Code (AAC) Title 18, Chapter 50 into the Alaska SIP (64 FR 72940). Transportation conformity is required under section 176(c) of the Act to ensure that federally supported highway, transit projects, and other activities are consistent with (''conform to'') the purpose of the SIP. Transportation conformity currently applies to areas that are designated nonattainment, and to areas that have been redesignated to attainment after 1990 (maintenance areas) with plans developed under section 175A of the Act, for the following transportation related criteria pollutants: Ozone, particulate matter ($PM_{2.5}$ and PM_{10}), carbon monoxide, and nitrogen dioxide. The transportation conformity regulation is found in 40 CFR part 93, subpart A, and in 40 CFR 51.390.

On August 10, 2005, the ''Safe, Accountable, Flexible, Efficient Transportation Equity Act: A Legacy for Users'' (SAFETEA–LU) transportation act was signed into law, and among other things, it amended the CAA to eliminate the requirement for states to adopt and submit general conformity SIPs. On April 5, 2010 (75 FR 17254), the EPA updated the general conformity SIP regulations to be consistent with the transportation act by eliminating the Federal regulatory requirement for states to adopt and submit general conformity SIPs. See 40 CFR 51.851. On May 7, 2015, with a supplementary letter received July 29, 2015, the Alaska Department of Environmental Conservation (ADEC) submitted a request to update the transportation conformity regulations and to remove the general conformity regulations from the Alaska SIP.

II. What is the EPA's analysis of the state's submittal?

We reviewed the State of Alaska's (the State) transportation conformity and general conformity SIP submittal to ensure consistency with the current CAA, as amended by the transportation act, and EPA regulations governing state procedures for both transportation and general conformity.

Alaska's submittal revises transportation conformity criteria and procedures related to interagency consultation, and enforceability of certain transportation related control and mitigation measures. Alaska's SIP revision updates the State's transportation conformity provisions, Article 7 of the Alaska Administrative Code (AAC) Title 18, Chapter 50 (18 AAC 50), to be consistent with the Act as amended by SAFETEA–LU and EPA regulations (40 CFR part 93 and 40 CFR 51.390). The EPA has reviewed the submittal to assure consistency with the Act as amended by SAFETEA–LU and EPA regulations (40 CFR part 93 and 40 CFR 51.390) governing state procedures for transportation conformity and interagency consultation and has concluded that the submittal is approvable. Details of our review are set forth in a technical support document (TSD), which has been included in the docket for this action. Specifically, in the TSD, the EPA identifies how the submitted procedures, as clarified by the State's July 29, 2015, supplement, satisfy the requirements under 40 CFR 93.105 for interagency consultation with respect to the development of transportation plans and programs, SIPs, and conformity determinations, the resolution of conflicts, and the provision of adequate public consultation, and our requirements under 40 CFR 93.122(a)(4)(ii) and 93.125(c) for enforceability of control measures and mitigation measures.

Alaska's SIP revision also addresses general conformity requirements. The revision removes the general conformity regulations from the Alaska SIP. These

regulations are no longer necessary since the establishment of the SAFETEA–LU removed the requirement for states to maintain general conformity regulations. Specifically, 40 CFR 51.851(a) was changed to indicate that states ''may,'' not ''must'' submit to the EPA a general conformity SIP because, as 40 CFR 51.851(b) indicates, Federal agencies shall use the provisions of 40 CFR part 93, subpart B in addition to any existing applicable state or tribal requirements to review the conformity of Federal actions in nonattainment or maintenance areas. Alaska's removal of general conformity rules from its SIP meets the requirements set forth in section 110(l) of the CAA with respect to adoption and submission of SIP revisions. 40 CFR part 93, subpart B continues to subject certain Federal actions to general conformity requirements without the need for identical state rules and SIPs. Therefore, repealing the state rule will not impact continuity of the general conformity program in Alaska, and consequently meets the requirements of section 110(l). Alaska's request to remove the general conformity regulations from the Alaska SIP is approvable.

III. Final Action

The EPA is approving and incorporating by reference into the Alaska SIP the revisions to 18 AAC 50 Article 7, Transportation Conformity, and supporting definitions in 18 AAC 50 Article 9, General Provisions, submitted by the State of Alaska on May 7, 2015, and supplemented on July 29, 2015. The revisions are State effective April 17, 2015. We note that we are not approving the revision to 18 AAC 50.735 because the State determined it was submitted in error, and requested in the July 29, 2015 supplement that the EPA not approve the revision. The State intends to rescind the rule section in the near future. We also note that the May 7, 2015 submittal included a number of rule revisions to 18 AAC 50 Articles 1 and 2, which are not related to transportation and general conformity. We intend to address those rule revisions in a separate action.

The EPA is approving but not incorporating by reference supplementary letter submitted by Alaska on July 29, 2015. The July 29, 2015 supplement clarifies that Alaska Statute (AS) 40.25.110 and AS 40.25.115, and implementing regulations at 2 AAC 96, Public Information, adequately address availability of materials and reasonable costs associated with access to public records with respect to Transportation Conformity.

IV. Incorporation by Reference

In this rule, the EPA is finalizing regulatory text that includes incorporation by reference. In accordance with requirements of 1 CFR 51.5, the EPA is incorporating by reference the provisions set forth below. The EPA has made, and will continue to make, these documents generally available electronically through *www.regulations.gov* and/or in hard copy at the appropriate EPA office (see the **ADDRESSES** section of this preamble for more information).

V. Statutory and Executive Order Reviews

Under the Clean Air Act, the Administrator is required to approve a SIP submission that complies with the provisions of the Act and applicable Federal regulations. 42 U.S.C. 7410(k); 40 CFR 52.02(a). Thus, in reviewing SIP submissions, the EPA's role is to approve state choices, provided that they meet the criteria of the Clean Air Act. Accordingly, this action merely approves state law as meeting Federal requirements and does not impose additional requirements beyond those imposed by state law. For that reason, this action:

- Is not a ''significant regulatory action'' subject to review by the Office of Management and Budget under Executive Orders 12866 (58 FR 51735, October 4, 1993) and 13563 (76 FR 3821, January 21, 2011);
- does not impose an information collection burden under the provisions of the Paperwork Reduction Act (44 U.S.C. 3501 *et seq.*);
- is certified as not having a significant economic impact on a substantial number of small entities under the Regulatory Flexibility Act (5 U.S.C. 601 *et seq.*);
- does not contain any unfunded mandate or significantly or uniquely affect small governments, as described in the Unfunded Mandates Reform Act of 1995 (Public Law 104–4);
- does not have Federalism implications as specified in Executive Order 13132 (64 FR 43255, August 10, 1999);
- is not an economically significant regulatory action based on health or safety risks subject to Executive Order 13045 (62 FR 19885, April 23, 1997);
- is not a significant regulatory action subject to Executive Order 13211 (66 FR 28355, May 22, 2001);
- is not subject to requirements of Section 12(d) of the National Technology Transfer and Advancement Act of 1995 (15 U.S.C. 272 note) because application of those requirements would be inconsistent with the Clean Air Act; and
- does not provide the EPA with the discretionary authority to address, as appropriate, disproportionate human health or environmental effects, using practicable and legally permissible methods, under Executive Order 12898 (59 FR 7629, February 16, 1994).

The SIP is not approved to apply on any Indian reservation land or in any other area where the EPA or an Indian tribe has demonstrated that a tribe has jurisdiction. In those areas of Indian country, the rule does not have tribal implications and will not impose substantial direct costs on tribal governments or preempt tribal law as specified by Executive Order 13175 (65 FR 67249, November 9, 2000).

The Congressional Review Act, 5 U.S.C. 801 *et seq.,* as added by the Small Business Regulatory Enforcement Fairness Act of 1996, generally provides that before a rule may take effect, the agency promulgating the rule must submit a rule report, which includes a copy of the rule, to each House of the Congress and to the Comptroller General of the United States. The EPA will submit a report containing this action and other required information to the U.S. Senate, the U.S. House of Representatives, and the Comptroller General of the United States prior to publication of the rule in the **Federal Register**. A major rule cannot take effect until 60 days after it is published in the **Federal Register**. This action is not a ''major rule'' as defined by 5 U.S.C. 804(2).

Under section 307(b)(1) of the Clean Air Act, petitions for judicial review of this action must be filed in the United States Court of Appeals for the appropriate circuit by November 9, 2015. Filing a petition for reconsideration by the Administrator of this final rule does not affect the finality of this action for the purposes of judicial review nor does it extend the time within which a petition for judicial review may be filed, and shall not postpone the effectiveness of such rule or action. Parties with objections to this direct final rule are encouraged to file a comment in response to the parallel notice of proposed rulemaking for this action published in the proposed rules section of today's **Federal Register**, rather than file an immediate petition for judicial review of this direct final rule, so that the EPA can withdraw this direct final rule and address the comment in the proposed rulemaking. This action may not be challenged later in proceedings to enforce its requirements. (See section 307(b)(2).)

List of Subjects in 40 CFR Part 52

Environmental protection, Air pollution control, Carbon monoxide, General conformity, Incorporation by reference, Intergovernmental relations, Lead, Nitrogen dioxide, Ozone, Particulate matter, Reporting and recordkeeping requirements, Sulfur oxides, Transportation conformity, Volatile organic compounds.

Dated: August 13, 2015.

Edward H. Chu,

Acting Regional Administrator, Region 10.

For the reasons stated in the preamble, 40 CFR part 52 is amended as follows:

PART 52—APPROVAL AND PROMULGATION OF IMPLEMENTATION PLANS

■ 1. The authority citation for Part 52 continues to read as follows:

Authority: 42 U.S.C. 7401 *et seq.*

Subpart C—Alaska

■ 2. In § 52.70:

■ a. The table in paragraph (c) is amended by:

■ i. Removing the heading entitled ''18 AAC 50 Article 7. Conformity'' and adding ''18 AAC 50 Article 7. Transportation Conformity'' in its place;

■ ii. Revising the entries ''18 AAC 50.700'', ''18 AAC 50.705'', ''18 AAC 50.715'', ''18 AAC 50.720'', and ''18 AAC 50.990'';

■ iii. Removing the entries ''18 AAC 50.710'', ''18 AAC 50.725'', and ''18 AAC 50.730''; and

■ iv. Adding the entries ''18 AAC 50.712'', ''18 AAC 50.740'', ''18 AAC 50.745'', and ''18 AAC 50.750'' in numerical order; and

■ b. The table in paragraph (e) under the heading ''Section III Area wide Pollutant Control Program'', is amended by:

■ i. Revising the entry ''I. Transportation Conformity''; and

■ ii. Adding, after the new entry for ''I. Transportation Conformity'', an entry for ''Transportation Conformity Supplement'' .

The revisions and additions read as follows:

§ 52.70 Identification of plan.

* * * * *

(c) * * *

EPA-APPROVED ALASKA REGULATIONS AND STATUTES

State citation	Title/Subject	State effective date	EPA Approval date	Explanations
Alaska Administrative Code Title 18 Environmental Conservation, Chapter 50 Air Quality Control (18 AAC 50)				
*	*	*	*	*
18 AAC 50 Article 7. Transportation Conformity				
18 AAC 50.700	Purpose	4/17/15	September 8, 2015 [Insert **Federal Register** citation]	
18 AAC 50.705	Applicability	4/17/15	September 8, 2015 [Insert **Federal Register** citation]	
18 AAC 50.712	Agency Responsibilities	4/17/15	September 8, 2015 [Insert **Federal Register** citation]	
18 AAC 50.715	Interagency Consultation Procedures.	4/17/15	September 8, 2015 [Insert **Federal Register** citation]	
18 AAC 50.720	Public Involvement	4/17/15	September 8, 2015 [Insert **Federal Register** citation]	
*	*	*	*	*
18 AAC 50.740	Written Commitments	4/17/15	September 8, 2015 [Insert **Federal Register** citation]	
18 AAC 50.745	Resolving Conflicts	4/17/15	September 8, 2015 [Insert **Federal Register** citation]	
18 AAC 50.750	Exempt Projects	4/17/15	September 8, 2015 [Insert **Federal Register** citation]	
*	*	*	*	*
18 AAC 50 Article 9. General Provisions				
*	*	*	*	*
18 AAC 50.990	Definitions	4/17/15	September 8, 2015 [Insert **Federal Register** citation]	

* * * * *

(e) * * *

EPA-APPROVED ALASKA NONREGULTAORY PROVISIONS AND QUASI-REGULATORY MEASURES

Name of SIP provision	Applicable geographic or nonattainment area	State submittal date	EPA Approval date	Comments
State of Alaska Air Quality Control Plan: Volume II. Analysis of Problems, Control Actions				
*	*	*	*	*
Section III Area wide Pollutant Control Program				
*	*	*	*	*
I. Transportation Conformity.	Statewide	4/17/15	September 8, 2015 [Insert **Federal Register** citation].	
Transportation Conformity Supplement.	Statewide	7/29/15	September 8, 2015 [Insert **Federal Register** citation].	Clarification re: Access to Public Records: AS 40.25.110, AS 40.25.115, and 2 AAC 96.
*	*	*	*	*

* * * * *

[FR Doc. 2015–21938 Filed 9–4–15; 8:45 am]

BILLING CODE 6560–50–P

ENVIRONMENTAL PROTECTION AGENCY

40 CFR Part 52

[EPA–R09–OAR–2015–0164; FRL–9933–50–Region 9]

Revisions to the California State Implementation Plan, Feather River Air Quality Management District; Correction

AGENCY: Environmental Protection Agency (EPA).

ACTION: Direct final rule; correction.

SUMMARY: The Environmental Protection Agency (EPA) is correcting a direct final rule that appeared in the **Federal Register** on July 8, 2015. The document approved revisions to various sections of the California State Implementation Plan (SIP). This document adds the appropriate amendatory language to § 52.220, Subpart F.

DATES: Effective on September 8, 2015.

FOR FURTHER INFORMATION CONTACT: Kevin Gong, EPA Region IX, (415) 972–3073, *Gong.Kevin@epa.gov.*

SUPPLEMENTARY INFORMATION: The EPA published a document in the **Federal Register** on July 8, 2015, (80 FR 38959) approving revisions to various sections of the California State Implementation Plan (SIP) in § 52.220, Subpart F. This correction adds the appropriate amendatory language.

Correction

In FR Doc. 2015–16627 appearing on page 38964 in the **Federal Register** on July 8, 2015 (80 FR 38959) make the following correction:

§ 52.220 [Corrected]

■ On page 38964, in the third column, line 25 from the top of the column, correct paragraph (c)(460) to read as follows:

''(460) The following plan revision was submitted on September 29, 2014, by the Governor's designee.

(i) [Reserved]

(ii) Additional Material.

(A) Feather River Air Quality Management District.

(*1*) Reasonably Available Control Technology Analysis and Negative Declarations (''2014 RACT SIP''), as adopted on August 4, 2014.''

Dated: August 21, 2015.

Jared Blumenfeld,

Regional Administrator, Region IX.

[FR Doc. 2015–21939 Filed 9–4–15; 8:45 am]

BILLING CODE 6560–50–P

DEPARTMENT OF HEALTH AND HUMAN SERVICES

42 CFR Part 52i

[Docket Number NIH–2007–0931]

RIN 0925–AA61

National Institute on Minority Health and Health Disparities Research Endowments

AGENCY: National Institutes of Health, Department of Health and Human Services.

ACTION: Final rule.

SUMMARY: The National Institutes of Health (NIH), through the Department of Health and Human Services (HHS), is issuing regulations governing the National Institute on Minority Health and Health Disparities (NIMHD) endowment grants awarded to section 736 and section 464z–4 Centers of Excellence to facilitate minority health disparities research and other health disparities research.

DATES: This final rule is effective October 8, 2015.

FOR FURTHER INFORMATION CONTACT: Jerry Moore, NIH Regulations Officer, Office of Management Assessment, NIH, 6011 Executive Boulevard, Room 601, MSC 7669, Rockville, MD 20852; by email at *MooreJ@mail.nih.gov;* by fax on 301–401–0169 (not a toll free number); or by telephone on 301–496–4607 (not a toll-free number).

SUPPLEMENTARY INFORMATION: Section 464z–3 (42 U.S.C. 285t) of the Public Health Service (PHS) Act authorizes the Director of the NIMHD to carry out a program to facilitate minority health disparities research and other health disparities research by providing research endowments to eligible centers of excellence under sections 736 and 464z–4 of the PHS Act. The program is called the NIMHD Research Endowment Program (Endowment Program). The objective of the Endowment Program is to build research and training capacity and infrastructure at eligible section 736 health professions schools (42 U.S.C. 293) and section 464z–4 biomedical and behavioral research institutions (42 U.S.C. 285t–1) to facilitate minority health and other health disparities research to close the disparity gap in the burden of illness and death experienced by racial and ethnic minority Americans and other health disparity populations. Endowment Program activities may include strengthening the research

infrastructure through the renovation of facilities, purchasing of state-of-the-art instruments and equipment, and enhancing information technology; enhancing the academic environment by recruiting a diverse faculty and creating relevant courses in such topics as research methodology and health disparities as additions to the existing curriculum; enhancing recruitment of individuals currently underrepresented in the biomedical, clinical, behavioral, and social sciences; or other relevant activities.

Section 464z–4 of the PHS Act authorizes the NIMHD Director to make awards to designated biomedical and behavioral research institutions, alone or as a participant in a consortium, that meet certain criteria for the purpose of assisting the institutions in supporting programs of excellence in training for individuals who are members of minority health disparity populations or other health disparity populations. This program is called the NIMHD Centers of Excellence Program. Section 464z–4(f) of the PHS Act permits the NIMHD Director to expend a portion of such an award for research endowment.

To be eligible to apply for the Endowment Program, Centers of Excellence (funded under section 736 or section 464z–4 of the PHS Act) must have an institutional endowment that is equal to or less than 50 percent of the national median of endowment funds at institutions that conduct similar biomedical research and training of health professionals. Endowment Program applications filed by institutions meeting eligibility requirements undergo peer review by outside experts to evaluate the scientific and technical merit of the proposed activities and the adequacy of the endowment fund management plan. Reviewers use the criteria of significance, investigators, innovation, approach, and environment to determine the overall impact of the application. After receiving an Endowment Program award, a grantee must provide documentation to the NIMHD over a 20-year period regarding endowment fund activity, including investments, income, and expenditures for activities consistent with its strategic plan.

This final rule specifies the endowment research grants or endowment portion of an award to which the regulations apply (section 52i.1), the definitions (section 52i.2), who is eligible (section 52i.3) and how to apply for a grant under the program (section 52i.5), and under what conditions an eligible institution that is a recipient may transfer to a foundation a research endowment grant (section 52i.4). Additionally, the final rule specifies how endowment grant applications will be evaluated (section 52i.6), the nature of the grant awards (52i.7), how much endowment fund income a grantee may withdraw and spend and for what purpose (sections 52i.9 and 52i.10), what a grantee must record and report (section 52i.11), and when and for what purposes a grantee may spend the endowment fund corpus (section 52i.8). This final rule also specifies what happens if a grantee fails to administer the research endowment grant in accordance with applicable regulations (section 52i.12), what other HHS policies and regulations apply (section 52i.13), and what additional conditions the NIMHD Director may impose when, in the Director's judgment, the conditions are necessary (section 52i.14).

NIH announced its intentions to take this rulemaking action, through HHS, in the notice of proposed rulemaking (NPRM) titled ''National Institute on Minority Health and Health Disparities Research Endowments'' published in the **Federal Register** on June 14, 2013 (78 FR 35837–35844). In the NPRM, we provided a sixty day public comment period. The comment period expired August 13, 2013. We received a total of five comments, two of which were identical.

Three respondents, two of whom submitted identical comments, expressed general support for the regulations. One of these respondents cited the importance of clarity regarding eligibility, the application process, and other required terms and conditions. The other two respondents discussed health disparities in the United States and research as a means to support health equity for all people in the United States. These supportive comments did not result in any necessary changes to this final rule.

One respondent stated that the Department of Health and Human Services (HHS) should require all municipalities and States that receive Federal funds from HHS for the provision of health care to notify HHS of the reasons for not considering or exploring solicited or non–solicited health disparities proposals they have received within 90 days. Since this comment is not related to any of the provisions of the Endowment Program, we did not consider the comment relevant to this rulemaking.

A fifth respondent provided comments addressing a number of issues relevant to the rulemaking, which are discussed below. This respondent requested clarification of the definition of a ''Center of Excellence,'' specifically, whether the act of receiving funds under section 736 or section 464z–4 is necessary for an institution to meet the definition of a Center of Excellence for purposes of the Endowment Program. The designation as a Center of Excellence for the purposes of the Endowment Program requires both receiving funding under section 736 or section 464z–4 of the Public Health Service Act and meeting certain specific nonfinancial institutional operational requirements as specified in section 736(c)(2)–(5) or section 464z–4(c)(1), respectively. The funding component of the definition in section 52i.2 is intended to clarify that an institution must be an active Center of Excellence under section 736 or section 464z–4 to be eligible for an endowment grant under this program. An institution is not eligible merely because it may be able to satisfy the nonfinancial requirements to qualify for funding under section 736 or section 464z–4.

This respondent also requested that institutions be allowed to apply for another Endowment Program grant prior to their last year of funding. We disagree with the comment. The intent of the language in the regulation is to prevent an eligible entity with an active award from having more than a single endowment grant at any given time.

This respondent additionally inquired whether awardee institutions may now directly conduct health disparities research projects instead of capacity building for the conduct of research projects because Endowment Program applications undergo scientific peer review. This is not the case. At the NIH, the peer review of applications determines the technical and scientific merit of the proposed project. The process of peer review does not in itself convey any meaning regarding the particular activities allowed under a grant program. The Endowment Program supports the development of research infrastructure and capacity which is the underpinning of the conduct of research projects.

This respondent raised concerns regarding the scientific peer review of applications and the expertise of the members of the review groups, suggesting that applicants be able to suggest potential candidates for each review group. We disagree with the comment. One of the hallmarks of the NIH is objective, peer review of applications for financial support. The organizational units within NIH that are responsible for the review of applications take deliberate steps to ensure that the reviewers have the appropriate expertise for the

applications to be reviewed. Allowing applicants to suggest potential reviewers would interfere with NIH procedures designed to prevent possible financial and scientific conflicts of interest in the review of applications.

This respondent also expressed the belief that requiring the endowment fund corpus to be maintained for 20 years after the end of the award period is too restrictive, suggesting that awardees be given greater flexibility and allowed to expend a proportion of the endowment fund corpus earlier than 20 years. We disagree with the comment. Institutional endowments, in general, are designed to create a long–term asset capable of generating income for an extended period of time. Since the focus of the Endowment Program is to build institutional capacity and infrastructure to conduct health disparities research, any diminution of the endowment corpus in the short–term would be at odds with the goals and objectives of the Endowment Program.

This respondent requested clarity on what actions would satisfy the requirement that awardees take ''appropriate actions'' in cases where the investments have eroded into the value of the endowment corpus. We have not specified a strict definition for ''appropriate actions'' in order to allow each institution the flexibility to manage their endowment funds effectively. Certainly, a review and change of investment strategy to a more conservative approach would be an option. A temporary suspension of investment due to adverse market conditions could also be an appropriate action. We did not want to be prescriptive, but would expect actions to be reasonable and consistent with prevailing practices in the management of institutional endowments.

This respondent also inquired as to whether management costs for the endowment fund can be paid from the endowment fund itself. Section 52i.11(a)(4) of the proposed rule provided that expenses and charges associated with the management of the endowment funds may be paid from ''the grant funds.'' Since the endowment fund corpus cannot be used for this purpose, section 52i.11(a)(4) has been amended to replace ''the grant funds'' with ''endowment fund income'' to clarify the issue. Awardees are expected to ensure that those costs are appropriately recorded.

This respondent suggested adding a reference to an ''institution's policies and procedures'' to section 52i.9(b) regarding the expenditure of endowment fund income. We disagree with the comment. Section 52i.7(b) already specifies the need for the awardee to adhere to the institution's spending rules and policies, provided that such spending rules are not inconsistent with applicable federal regulations and policies.

This respondent requested clarification on the timing for the filing of the final Financial Status Report under section 52.11(d). Upon approval of an application for the Endowment Program, NIMHD agrees to provide financial support for a specified project period, usually five years. Due to the unique nature of the program, it is reasonable for the long–term reporting requirement to begin at the end of the project period. To clarify the filing requirement, section 52i.11(d) has been amended to replace ''date of the original award'' with ''end of the project period.'' In addition, sections 52i.7(e) and 52i.8(a) have been amended in a consistent manner to replace ''date of award'' with ''end of the project period.''

Finally, with regard to actions that may be taken if a grantee fails to administer the endowment in accordance to the regulations, this respondent believes that the awardee should be given an opportunity to rectify an error, unless such an error or failure was intentional. We agree with the comment with the following qualification. The specific language in section 52i.12 is consistent with the financial stewardship responsibilities of the Federal government. The opportunity for a full and fair hearing is provided and the Director of NIMHD has discretion regarding any action to be taken depending on the circumstances of the breach in responsibilities. Limiting the range of actions available to the NIH in situations of an awardee's poor endowment fund management, even if non–intentional, would not be appropriate.

The published NPRM contained two typographical errors that have been corrected in this final rule. First, under the definition of ''endowment fund'' in section 52i.2, the reference to ''section 464z–4'' should have been ''section 464z–3'' of the PHS Act. Second, in the discussion of the sections of the proposed regulations that contain requirements subject to the Paperwork Reduction Act of 1995, the reference to section ''52i.9'' should have been specified as section ''52i.9(b)''. That error has been corrected in the final rule, consistent with the correct identification of section 52i.9(b) in the Reporting part of the Estimated Annual Reporting and Recordkeeping Burden table included in the NPRM and this final rule. The published NPRM contained a table on the cost burdens for reporting and recordkeeping for the NIMHD Research Endowment Program. In the final rule it has been labeled ''ESTIMATED ANNUALIZED COST BURDEN TO THE RESPONDENTS FOR REPORTING AND RECORDKEEPING UNDER THE NIMHD RESEARCH ENDOWMENT PROGRAM.'' An additional column (designated as the 4th) was added to the table as ''Average Burden per Respondents (in hours)'' and columns 1, 2 3, 5, and 6 were re–titled as ''Final Rule Citations,'' ''Number of Respondents,'' Number of Responses per Respondent,'' ''Hourly Wage Rate,'' and ''Total Cost Burden,'' respectively. The dollar amounts in the Hourly Wage Rate column were edited to reflect the actual cost per hour for responses. In addition, the footnotes for the table were edited to be consistent with the table.

The Regulatory Flexibility Act section of the final rule has been revised to clarify that while all eligible institutions are considered small entities, the impact of the final rule will not exceed five percent of revenues of the entities.

Regulatory Impact Analyses (RIA)

We have examined the impacts of this rule as required by Executive Order 12866, Regulatory Planning and Review (September 30, 1993); Executive Order 13563, Improving Regulation and Regulatory Review (January 18, 2011); the Regulatory Flexibility Act (5 U.S.C. 601–612); the Unfunded Mandates Reform Act of 1995 (Pub. L. 104–4); and Executive Order 13132, Federalism (August 4, 1999).

Executive Orders 12866 and 13563

Executive Order 12866, Regulatory Planning and Review, directs agencies to assess all costs and benefits of available regulatory alternatives and, when regulation is necessary, to select regulatory approaches that maximize net benefits (including potential economic, environmental, public health and safety, and other advantages; distributive impacts; and equity). A regulatory impact analysis (RIA) must be prepared for major rules with economically significant effects ($100 million or more in one year). Based on our analysis, we believe that the final rule does not constitute an economically significant regulatory action. Additionally, if a regulatory action is deemed to fall within the scope of the definition of the term ''significant regulatory action'' contained in section 3(f) of Executive Order 12866, pre–publication review by the Office of Information and Regulatory Affairs (OIRA), Office of Management and Budget (OMB) is required. This final

rule was reviewed under the criteria of Executive Order 12866 and was not deemed a ''significant regulatory action.''

Executive Orders 12866 and 13563 direct agencies to assess all costs and benefits of available regulatory alternatives and, if regulation is necessary, to select regulatory approaches that maximize net benefits (including potential economic, environmental, public health, and safety effects; distributive impacts; and equity). Executive Order 13563 emphasizes the importance of quantifying both costs and benefits, of reducing costs, of harmonizing rules, and of promoting flexibility.

Benefits

The final rule will add transparency for potential applicants regarding who is eligible and how to apply for a grant under the program, how grant applications will be evaluated, and under what conditions an eligible institution that is a recipient may transfer to a foundation a research endowment grant. Additionally, the final rule specifies the nature of the grants, how much endowment fund income a grantee may withdraw and for what purpose, what a grantee must record and report, and when and for what purposes a grantee may spend the endowment fund corpus.

This final rule also enhances compliance and effective fiduciary responsibilities for the federal government. It specifies what happens if a grantee fails to administer the research endowment grant in accordance with applicable regulations, what other HHS policies and regulations apply, and additional conditions the NIMHD Director may impose when, in the Director's judgment, the conditions are necessary. The Director may, with respect to any grant award, impose additional conditions prior to, or at the time of, any award when in the Director's judgment the conditions are necessary to ensure the carrying out of the purposes of the award, the interests of the public health, or the conservation of grant funds.

Costs

Based on the provisions of the PHS Act, approximately twelve Institutions of Higher Education (IHEs) are eligible for the NIMHD Research Endowment Program. Costs for participation can be subdivided into those associated with the application process and those required for the necessary recordkeeping. The application process includes a competitive submission, as well as noncompetitive progress report for those institutions awarded funds under the NIMHD Research Endowment Program for subsequent years within the project period. Based on estimates provided in the PHS 424 instructions, an average application should require approximately 22 hours to complete and 15 hours for a subsequent progress report, according to the PHS 2590 instructions. The contribution of various professional disciplines such as biomedical researchers, contract/grants specialists, and technical staff to the reporting and recordkeeping requirements varies. Cost estimates are based on a blended analysis of institutional salary structure and prevailing market conditions for certain categories of personnel. In addition, fiscal year 2012 NIH salary limitations were included in the derivation of cost estimates, where applicable.

ESTIMATED ANNUALIZED COST BURDEN TO THE RESPONDENTS FOR REPORTING AND RECORDKEEPING UNDER THE NIMHD RESEARCH ENDOWMENT PROGRAM

Final rule citations	Number of respondents [1]	Number of responses per respondent	Average burden per respondents (in hours)	Hourly wage rate [2]	Total cost burden [3]
Reporting:					
§ 52i.3(b)(2)	4	1	4	[4] $33.65	$538.40
§ 52i.4(a)	4	1	1	[5] 33.65	134.60
§ 52i.4(c)	4	1	1	[6] 33.65	134.60
§ 52i.5(a)	4	1	22	[7] 163.73	14,408.00
§ 52i.9(b)	4	1	4	[8] 86.39	1,382.24
§ 52i.11(b)	12	1	15	[9] 118.33	21,300.00
§ 52i.11(d)	12	1	2	[10] 100.00	2,400.00
Subtotal			49		40,297.84
Recordkeeping:					
§ 52i.10	12	1	2	[11] 200.00	4,800.00
§ 52i.11(a)(1)	12	1	2	[12] 33.65	807.60
§ 52i.11(a)(2)	12	1	2	[13] 33.65	807.60
§ 52i.11(a)(3)	12	1	2	[14] 33.65	807.60
§ 52i.11(a)(4)	12	1	2	[15] 33.65	807.60
§ 52i.11(b)	12	1	8	[16] 33.65	3,230.40
Subtotal			18		11,260.80
Total			67		51,558.64

[1] There is currently a total of twelve institutions eligible for the NIMHD Research Endowment Program. Historically, requests for applications are solicited every three years.

[2] Average cost per hour.

[3] Number of respondents × average burden per response × hourly wage rate.

[4 5 6] Based on contracts/grants staff costs.

[7] Based on the contributions of the principal investigator, participating faculty, contracts/grants staff, financial investment advisors, and administrative support. Aggregate cost is $173.73/hour.

[8] Based on principal investigator costs.

[9] Based on the contributions of the principal investigator, participating faculty, contracts/grants staff, financial investment advisors, and administrative support. Aggregate cost is $118.33/hour.

[10] Based on financial analyst/auditor costs.

[11] Based on financial investment advisor costs.

[12 13 14 15 16] Based on contracts/grants staff costs.

Alternatives

The unique and complex nature of the NIMHD Research Endowment Program with regard to the management of endowment funds, restrictive nature of expenditures, and strict reporting provides a challenge to the necessary federal oversight. The final rule provides the guidelines for the creation of an operation structure of the institutional program. The implementation of the final rule will provide clarity to eligible and participating institutions with regard to expectations as a grantee under the program, as well as enhance the ability of the federal government to ensure the grantees are in compliance with all the applicable provisions of the statute.

The Regulatory Flexibility Act

The Regulatory Flexibility Act (5 U.S.C. 601–612) requires agencies to analyze regulatory options that would minimize any significant impact of the rule on small entities. For the purposes of this analysis, small entities include small business concerns as defined by the Small Business Administration, usually businesses with fewer than 500 employees. Also a nonprofit entity is defined by the Regulatory Flexibility Act as small if it is not dominant in its field, regardless of the number of employees. Eligibility requirements of the Research Endowment program, as codified in Public Law 111–148, limits the universe of potential applicants to approximately twelve institutions of higher education (IHEs). Utilizing sources of information such as local business bureaus, workforce statistics, and institution Web sites, a reasonable determination was made as to the approximate number of employees at eligible institutions. The range estimates are from 175–550 for the smallest institution to 3,976 for the largest and none are considered dominant in their field. While all eligible institutions are considered small entities, the impact of the final rule will not exceed five percent of revenues of the entities. Accordingly, the Secretary certifies that this rule will not have a significant impact on a significant number of small entities.

Unfunded Mandates Reform Act of 1995

Section 202(a) of the Unfunded Mandates Reform Act of 1995 requires that agencies prepare a written statement, which includes an assessment of anticipated costs and benefits, before proposing ''any rule that includes any Federal mandate that may result in the expenditure by State, local, and tribal governments, in the aggregate, or by the private sector, of $100,000,000 or more (adjusted annually for inflation [with base year of 1995]) in any 1 year.'' The current inflation-adjusted statutory threshold is approximately $141 million based on the Bureau of Labor Statistics inflation calculator. The Secretary certifies that this rule does not mandate any spending by state, local or tribal government in the aggregate or by the private sector. Participation in the NIMHD Research Endowment Program is voluntary and not mandated.

Executive Order 13132

Executive Order 13132, Federalism, requires federal agencies to consult with state and local government officials in the development of regulatory policies with federalism implications. The Secretary reviewed this rule as required under the Executive Order and determined that it does not have federalism implications. The Secretary certifies that this rule will not have an effect on the states or on the distribution of power and responsibilities among the various levels of government.

Paperwork Reduction Act

This rule contains requirements that are subject to OMB approval under the Paperwork Reduction Act of 1995, as amended (44 U.S.C. chapter 35). Sections 52i.3(b)(2), 52i.4(a), 52i.4(c), 52i.5(a), 52i.9(b), 52i.11(b), and 52i.11(d) contain reporting and information collection requirements that are subject to OMB approval under the Paperwork Reduction Act. Sections 52i.10, 52i.11(a)(1), 52i.11(a)(2), 52i.11(a)(3), 52i.11(a)(4), and 52i.11(b) contain recordkeeping requirements that are subject to OMB review under the Paperwork Reduction Act. The title, program description, and respondent description of the information collection and recordkeeping requirements contained in this rule will be submitted to OMB for review. Organizations and individuals can submit comments on the information collection and recordkeeping requirements, including the burden estimates, to: (1) Seleda Perryman, Project Clearance Officer, National Institutes of Health, Rockledge Center 1, 6705 Rockledge Drive, Room 3509, Bethesda, MD 29817, telephone 301–594–7949 (not a toll-free number); and (2) the Office of Information and Regulatory Affairs, OMB, OIRA_submission@omb.eop or by fax to 202–395–6974, and mark ''Attention: Desk Officer for the National Institutes of Health, Department of Health and Human Services.'' After we obtain OMB approval, we will publish the OMB control number in the **Federal Register**.

Title: National Institute on Minority Health and Health Disparities Research Endowments.

Description: The NIMHD Research Endowment Program builds research capacity and research infrastructure in order to facilitate minority health research and research regarding other health disparity populations at eligible institutions under sections 736 and 464z–4 of the PHS Act.

Respondent Description: Institutions currently funded under Section 736 or Section 464z–4 of the Public Health Service Act (PHS Act).

ESTIMATED ANNUALIZED REPORTING AND RECORDKEEPING BURDEN NIMHD RESEARCH ENDOWMENT PROGRAM

Citations	Number of respondents	Number of responses per respondent	Average burden per respondent (in hours)	Total burden hours
Reporting:				
§ 52i.3(b)(2)	4	1	4	16
§ 52i.4(a)	4	1	1	4
§ 52i.4(c)	4	1	1	4
§ 52i.5(a)	4	1	22	88
§ 52i.9(b)	4	1	4	16
§ 52i.11(b)	12	1	15	180
§ 52i.11(d)	12	1	2	24
Subtotal			49	332
Recordkeeping:				
§ 52i.10	12	1	2	24

ESTIMATED ANNUALIZED REPORTING AND RECORDKEEPING BURDEN NIMHD RESEARCH ENDOWMENT PROGRAM—Continued

Citations	Number of respondents	Number of responses per respondent	Average burden per respondent (in hours)	Total burden hours
§ 52i.11(a)(1)	12	1	2	24
§ 52i.11(a)(2)	12	1	2	24
§ 52i.11(a)(3)	12	1	2	24
§ 52i.11(a)(4)	12	1	2	24
§ 52i.11(b)	12	1	8	96
Subtotal			18	216
Total			67	548

Catalogue of Federal Domestic Assistance

The Catalogue of Federal Domestic Assistance-numbered program applicable to this rule is: 93.307—Minority Health and Health Disparities Research.

List of Subjects in 42 CFR Part 52i

Grant programs—Health, Medical research.

For reasons described in the preamble, title 42 of the Code of Federal Regulations is amended by adding part 52i to read as follows.

PART 52i—NATIONAL INSTITUTE ON MINORITY HEALTH AND HEALTH DISPARITIES RESEARCH ENDOWMENT PROGRAMS

Sec.

52i.1 To what programs does this part apply?
52i.2 Definitions.
52i.3 Who is eligible to apply?
52i.4 Under what conditions may an eligible institution designate a foundation as the recipient of a research endowment grant?
52i.5 How to Apply for a Grant.
52i.6 Evaluation and Disposition of Research Endowment Grant Applications.
52i.7 Grant Awards.
52i.8 When and for what purposes may a grantee spend the endowment fund corpus?
52i.9 How much endowment fund income may a grantee spend and for what purposes?
52i.10 How shall a grantee calculate the amount of endowment fund income that it may withdraw and spend?
52i.11 What shall a grantee record and report?
52i.12 What happens if a grantee fails to administer the research endowment grant in accordance with applicable regulations?
52i.13 Other HHS policies and regulations that apply.
52i.14 Additional conditions.

Authority: 42 U.S.C. 216, 285t–285t–1.

§ 52i.1 To what programs does this part apply?

This part applies to grants awarded under section 464z–3(h) of the Public Health Service Act (the Act), which authorizes the Director of the National Institute on Minority Health and Health Disparities (NIMHD) to carry out a program of research endowment grants to eligible institutions to facilitate minority health and health disparities research (the NIMHD Research Endowment Program), and, with the exception of §§ 52i.5 and 52i.6, applies to that portion of an award made under section 464z–4(f) of the Act authorized by the NIMHD Director for research endowment.

§ 52i.2 Definitions.

As used in this part:

Act means the Public Health Service Act, as amended (42 U.S.C. 201 *et seq.*).

Center of Excellence means, for purposes of grants authorized by section 464z–3(h) of the Act, an institution designated as a Center of Excellence and receiving a grant under section 736 (42 U.S.C. 293) or section 464z–4 (42 U.S.C. 285t–1) of the Act.

Director means the Director, NIMHD, of the National Institutes of Health.

Endowment fund means a fund that is established by state law, by an institution, or by a foundation associated with an institution that is exempt from taxation and is maintained for the purpose of generating income for the support of minority and health disparities research or research training if the funds are from a grant made under section 464z–3 of the Act. The principal or corpus of the fund may not be spent except as noted in § 52i.8(b).

Endowment fund corpus means an amount equal to the total grant funds awarded under this part or equal to the amount designated as endowment under section 464z–4 of the Act.

Endowment fund income means the income generated from investing the corpus, *i.e.,* the amount of which exceeds the endowment fund corpus.

Health disparities research means basic, clinical, and behavioral research on health disparity populations (including individual members and communities of such populations) that relates to health disparities, including the causes of such disparities and methods to prevent, diagnose, and treat such disparities.

Health disparity population means a population that, as determined by the Director of the NIMHD after consultation with the Director of the Agency for Healthcare Research and Quality, has a significant disparity in the overall rate of disease incidence, prevalence, morbidity, mortality, or survival rates in the population as compared to the health status of the general population.

Health disparity students means students of minority health disparity populations or other health disparities populations.

Institutional endowment (IE) means the corporate or system-wide endowment fund that is the sum total of the endowment assets of all campuses and their components. This includes, but is not limited to, endowments managed by an institution's foundations/associations as well as state university systems.

Institution system-wide means all campuses and components.

Minority health conditions means, with respect to individuals who are members of minority groups, all diseases, disorders, and conditions (including with respect to mental health and substance abuse):

(1) Unique to, more serious, or more prevalent in such individuals;

(2) For which the factors of medical risk or types of medical intervention may be different for such individuals, or for which it is unknown whether such factors or types are different for such individuals; or

(3) With respect to which there has been insufficient research involving such individuals as subjects or insufficient data on such individuals.

Minority health disparities research means basic, clinical, and behavioral research on minority health conditions, including research to prevent, diagnose, and treat such conditions.

Racial and ethnic minority or minority group means American Indians (including Alaska Natives, Eskimos, and Aleuts), Asian Americans, Native Hawaiians and other Pacific Islanders, Blacks, and Hispanics. Hispanic means individuals whose origin is Mexican, Puerto Rican, Cuban, Central or South American, or other Spanish culture or origin.

Secretary means the Secretary of Health and Human Services and any other officer or employee of the Department of Health and Human Services to whom the authority involved has been delegated.

§ 52i.3 Who is eligible to apply?

(a) To be eligible for a grant under section 464z–3(h) of the Act an applicant:

(1) Must be a Center of Excellence under section 736 (42 U.S.C. 293) or section 464z–4 (42 U.S.C. 285t–1) of the Act, and

(2) Must have an institutional endowment that is equal to or less than 50 percent of the national median of endowment funds at institutions that conduct similar biomedical research and training of health professionals.

(b) To be eligible for a portion of a grant award to be expended as a research endowment under section 464z–4(f) of the Act, an applicant:

(1) Must be a designated biomedical and behavioral research institution under section 464z–4 of the Act, and

(2) Must submit those materials prescribed by the Director, NIMHD.

§ 52i.4 Under what conditions may an eligible institution designate a foundation as the recipient of a research endowment grant?

A number of universities and other organizations have established closely affiliated, but separately incorporated, organizations to facilitate the administration of research and other programs supported by federal funds. Such legally independent entities are often referred to as ''foundations,'' although this term does not necessarily appear in the name of the organization. An institution awarded an endowment grant under section 464z–3(h) of the Act or using designated grant funds for endowment purposes under section 464z–4(f) of the Act may designate a foundation associated with the institution to receive the endowment funds only for investment purposes if:

(a) The institution assures in its application that the foundation is legally authorized to receive the endowment funds and to administer the endowment funds in accordance with the regulations set forth in this part;

(b) The foundation agrees to administer the endowment funds in accordance with the regulations in this part;

(c) The institution agrees to be liable for any violation by the foundation of any applicable regulation, including any violation resulting in monetary liability; and

(d) The grantee institution has control and is responsible for the administration of the grant accounts.

§ 52i.5 How to apply for a grant.

(a) Each institution interested in applying for a grant under section 464z–3(h) of the Act must submit an application at such time and in such form and manner as the Secretary may prescribe.

(b) An institution described in § 52i.3 that has received a grant under this part may apply for another grant under this part if:

(1)(i) The institution still meets the eligibility requirements in § 52i.3; and

(ii) The institution is in the last year of funding provided by NIH under this part; or

(2) The institution no longer has an active grant under this part from NIH.

§ 52i.6 Evaluation and award of research endowment grant applications.

All applications filed in accordance with this part and meeting the minimal eligibility requirements shall be evaluated and recommended by technical and scientific peer review. The review evaluation shall take into account, among other pertinent factors:

(a) The scientific and technical merit of the proposed project to facilitate minority health disparities research and other health disparities research;

(b) The likelihood of its producing meaningful results;

(c) The adequacy of the applicant's resources available for the project; and

(d) The adequacy of the applicant's plan for managing the endowment fund.

§ 52i.7 Grant awards.

(a) Within the limits of funds, and upon such review and recommendation as may be required by law, the Director shall award a grant to those applicants whose approved projects will in the Director's judgment best promote the purposes of this part.

(b) An institution described in § 52i.3 that receives a grant under this part or an institution described in section 464z–4(f) of the Act authorized to use grant funds for endowment purposes shall follow the spending rules under the law of the state in which the institution is located and the spending rules/policies adopted by the recipient institution, provided that such spending rules are not inconsistent with applicable federal regulations/policies.

(c) Grants awarded under this part or grant funds designated for endowment purposes as described under section 464z–4(f) of the Act must be invested no later than 90 days after the start date of the grant.

(d) The institution, in investing the endowment fund established under this section, shall exercise the judgment and care, under the circumstances then prevailing, that a person of prudence, discretion, and intelligence would exercise in the management of such person's own affairs and avoid all appearances of conflict of interest in the management of this fund.

(e) The total amount of an endowment grant under this part or the designated amount of the grant under section 464z–4(f) of the Act must be maintained as corpus by the institution for 20 years from the end of the project period.

(f) In the case of situations in which investment conditions result in the corpus referred to in paragraph (e) of this section having a net market value less than the value of the funds at the time of their receipt, appropriate actions must be taken (*e.g.,* careful review of the investment strategy) in order to preserve the value of the endowment corpus.

(g) An institution described in § 52i.3 receiving an endowment grant under section 464z–3(h) of the Act may not simultaneously receive endowment funds under section 464z–4(f) of the Act.

(h) Consistent with section 464z–4(f) of the Act, the Director, NIMHD, may designate for a research endowment some of the funds awarded to a Center of Excellence for research education and training.

§ 52i.8 When and for what purposes may a grantee spend the endowment fund corpus?

(a) A grantee may not withdraw or spend any part of the endowment fund corpus for a total of 20 years from the end of the project period.

(b) At the end of the 20-year period, during which the endowment corpus must be maintained, the grantee institution is encouraged to preserve the endowment fund corpus but may use the endowment fund corpus for any

purpose that expands or develops the institution's minority health and/or health disparities research and/or training capacity.

§ 52i.9 How much endowment fund income may a grantee spend and for what purposes?

(a) Any endowment income realized in the initial year following the grant award under this part shall not be expended to support programmatic activities until after conclusion of the initial year of the grant.

(b) After the first year of the grant, a grantee awarded funds under this part may spend endowment income realized from funds it receives solely in accordance with the regulations of this part, the terms and conditions of the award, NIMHD policies and procedures, and the grantee's strategic plan that has been approved by the NIMHD and includes priorities for the use of the endowment fund income.

§ 52i.10 How shall a grantee calculate the amount of endowment fund income that it may withdraw and spend?

A grantee awarded funds under this part shall calculate the amount of endowment fund income that it may withdraw and spend at a particular time as follows:

(a) On each date that the grantee plans a withdrawal of endowment fund income, the grantee must determine the amount of the income by calculating the value of the fund that exceeds the endowment fund corpus.

(b) If the total value of the endowment fund exceeds the endowment fund corpus, the grantee may withdraw and spend the excess amount, *i.e.,* the endowment fund income, in accordance with § 52i.9.

§ 52i.11 What shall a grantee record and report?

A grantee awarded funds under this part shall:

(a) Maintain appropriate records in compliance with this part and other requirements as referenced in terms of the award, including documentation of:

(1) The type and amount of investments of the endowment fund;

(2) The amount of endowment fund income and corpus;

(3) The amount and purpose of expenditures of endowment fund income; and

(4) The expenses and charges associated with the management of the endowment funds if such expenses and charges were paid from endowment fund income.

(b) Retain records in accordance with 45 CFR 74.53. The endowment fund corpus, fund income, and fund expenditures must be reported over a 20-year period, and supporting records are to be retained for 3 years after the submission of the final report to the NIMHD;

(c) Permit authorized officials the authority to conduct a review, as set forth in 45 CFR 74.53(e) (which states that the Department of Health and Human Services (HHS) awarding agencies, the HHS Inspector General, the U.S. Comptroller General, and any of their duly authorized representatives ''have the right of timely and unrestricted access to any books, documents, papers, or other records of recipients that are pertinent to the awards, in order to make audits, examinations, excerpts, transcripts, or copies of such documents''); and

(d) Submit Financial Status Reports, as set forth in 45 CFR 74.52, as required by the NIMHD and in the form prescribed. A final Financial Status Report shall be required 20 years after the end of the project period.

§ 52i.12 What happens if a grantee fails to administer the research endowment grant in accordance with applicable regulations?

(a) The Director, after giving notice and an opportunity for a hearing, may authorize the termination of a grant awarded and/or recovery of funds under this part during the 20-year period if the grantee:

(1) Withdraws or spends any part of the endowment fund corpus in violation of this part;

(2) Spends any portion of the endowment fund income not permitted to be spent in this part;

(3) Fails to invest the endowment fund corpus in accordance with the investment standards set forth in this part;

(4) Fails to meet the requirements in § 52i.7; or

(5) Otherwise fails to comply with the terms and conditions of the award.

(b) Recovery of funds may include up to the amount of endowment awards plus any income earned.

§ 52i.13 Other HHS policies and regulations that apply.

Several other regulations and policies apply to grants under this part. These include, but are not limited to:

(a) 2 CFR part 376—HHS Nonprocurement debarment and suspension.

(b) 42 CFR part 50, subpart D—Public Health Service grant appeals procedure.

(c) 42 CFR part 93—Public Health Service policies on research misconduct.

(d) 45 CFR part 16—Procedures of the Departmental Grant Appeals Board.

(e) 45 CFR part 46—Protection of human subjects.

(f) 45 CFR part 74—Uniform administrative requirements for awards and subawards to institutions of higher education, hospitals, other nonprofit organizations, and commercial organizations; and certain grants and agreements with states, local governments, and Indian tribal governments.

(g) 45 CFR part 80—Nondiscrimination under programs receiving federal assistance through the Department of Health and Human Services effectuation of Title VI of the Civil Rights Act of 1964.

(h) 45 CFR part 81—Practice and procedure for hearings under part 80 of this chapter.

(i) 2 CFR part 382—Requirements for drug-free workplace (financial assistance).

(j) 45 CFR part 84—Nondiscrimination on the basis of handicap in programs or activities receiving federal financial assistance.

(k) 45 CFR part 86—Nondiscrimination on the basis of sex in education programs or activities receiving federal financial assistance.

(l) 45 CFR part 91—Nondiscrimination on the basis of age in programs or activities receiving federal financial assistance from HHS.

(m) 45 CFR part 92—Uniform administrative requirements for grants and cooperative agreements to State, local, and tribal governments.

(n) 45 CFR part 93—New restrictions on lobbying.

(o) NIH Guidelines for Research Involving Recombinant or Synthetic Nucleic Acid Molecules at *http://osp.od.nih.gov/sites/default/files/NIH_Guidelines_0.pdf.* Further information may be obtained from the NIH Office of Biotechnology Activities via email at *OBA-OSP@od.nih.gov* or the OBA Web site at *http://osp.od.nih.gov/office-biotechnology-activities.*

(p) NIH Guidelines on the Inclusion of Women and Minorities as Subjects in Clinical Research at *http://grants.nih.gov/grants/guide/notice-files/NOT-OD-02-001.html.* Further information may be obtained from the NIH Office of Research on Women's Health via email at *ORWHINFO@mail.nih.gov* or the ORWH Web site at *http://ORWH.od.nih.gov.*

(q) NIH Grants Policy Statement (October 1, 2013). This version is located on the NIH Web site at *http://grants.nih.gov/grants/policy/nihgps_2013.* [Note: this policy is subject to change, and interested persons should contact the Office of Policy for Extramural Research Administration

(OPERA), Office of Extramural Research, NIH, 6701 Rockledge Drive, Suite 350, MSC 7974, Bethesda, MD 20892–7974 (telephone 301–435–0938 or toll-free 800–518–4726), to obtain references to the current version and any amendments. Information may be obtained also by contacting the OPERA Division of Grants Policy via email at *GrantsPolicy@mail.nih.gov.* Previous versions of the NIH Grants Policy Statement are archived at *http://grants.nih.gov/grants/policy/policy.htm.*]

(r) Public Health Service Policy on Humane Care and Use of Laboratory Animals, Office of Laboratory Animal Welfare, NIH (Revised August 2002). [Note: this policy is subject to change, and interested persons should contact the Office of Laboratory Animal Welfare, NIH, Rockledge 1, Suite 360, MSC 7982, 6705 Rockledge Drive, Bethesda, MD 20892–7982 (telephone 301–594–2382, not a toll-free number), to obtain references to the current version and any amendments. Information may be obtained also via the OLAW Web site at *http://grants.nih.gov/grants/olaw/olaw.htm.*]

§ 52i.14 Additional conditions.

The Director may, with respect to any grant award, impose additional conditions prior to, or at the time of, any award when in the Director's judgment the conditions are necessary to ensure the carrying out of the purposes of the award, the interests of the public health, or the conservation of grant funds.

Dated: August 13, 2015.

Francis S. Collins,

Director, National Institutes of Health.

Approved: August 24, 2015.

Sylvia M. Burrell,

Secretary, Department of Health and Human Services.

[FR Doc. 2015–22018 Filed 9–4–15; 8:45 am]

BILLING CODE 4140–01–P

FEDERAL COMMUNICATIONS COMMISSION

47 CFR Parts 0, 2, 11, 15, 18, 73, 74, 76, 78, 80, 90, 95, and 97

[FCC 15–81]

Reorganization of the Enforcement Bureau's Field Operations

AGENCY: Federal Communications Commission.

ACTION: Final rule.

SUMMARY: The Federal Communications Commission (the Commission) acts to improve the Commission's efficiency, effectively manage Commission resources, and align the Commission's field enforcement activities with contemporary needs for a field enforcement presence. The Commission, the Office of Managing Director and the Enforcement Bureau will take several actions to realign the mission and resources of its 24 field offices. The Bureau's field offices will primarily support the enforcement of the Commission's radio frequency spectrum rules and other key regulations in a manner likely to have the greatest impact, in the most cost effective way possible.

DATES: Effective September 8, 2015.

FOR FURTHER INFORMATION CONTACT: William Davenport, Enforcement Bureau, (202) 418–1034.

SUPPLEMENTARY INFORMATION: This is a summary of the Commission's Order; FCC 15–81, adopted and released on July 16, 2015. The full text of this document is available for public inspection during regular business hours in the FCC Reference Center, Room CY–A257, 445 12th Street SW., Washington, DC 20554 or at the following Internet address: *https://www.fcc.gov/document/fcc-adopts-plan-modernize-field-operations-0.* Alternative formats are available to persons with disabilities (braille, large print, electronic files, audio format); to obtain, please send an email to *fcc504@fcc.gov* or call the Consumer and Governmental Affairs Bureau at (202) 418–0530 (voice), (202) 418–0432 (TTY).

I. Introduction

1. Through this Order, we act to improve the Commission's efficiency, effectively manage Commission resources, and align the Commission's field enforcement activities with contemporary needs for a field enforcement presence. With its 24 field offices (''Field'') and Equipment Development Group, the Enforcement Bureau resolves interference issues, assists with disaster recovery, and enforces technical compliance with Commission rules and the Communications Act. The current model of the Field was adopted approximately 20 years ago.[1] Since then, technological changes and increasingly limited resources have created the need to take a fresh look at the Bureau's Field operations. The Commission has completed a full review of the mission, processes, and organization of the Field. Our review concludes that our Field resources should be concentrated in urban areas where the need for them is greatest. This Order refocuses the Field on enforcement of our radio frequency spectrum rules and other key regulations in a high impact and cost effective manner that is better aligned with the priorities of the Commission and the Bureau as a whole.

II. Discussion

2. The Commission has determined to make changes to the Field in order to create a more effective organization within the limits of our budgetary constraints. By this action we restructure the Enforcement Bureau's field operations to implement the changes. The Field reorganization will better align the Field's mission with the priorities of the Commission, increase efficiency in terms of both employee performance and management oversight, and enable updating the employee skillset and equipment deployed in the Field. We take this action after extensive outreach to internal and external stakeholders, including a survey of field personnel and interviews with field staff, current and former management, outside experts, regulatees, and other government agencies. We also reviewed field operations by other federal agencies and examined the Bureau's enforcement activity database to assess the Field's caseload, efficiency, and effectiveness.

3. Based on that comprehensive review, the Commission, the Office of Managing Director and the Enforcement Bureau will take several actions to realign the mission and resources of the Field. The Bureau's field offices will primarily support the enforcement of the Commission's radiofrequency interference requirements and other key rules. These enforcement efforts will be guided by the priorities of the Commission and the Enforcement Bureau and occur in the manner likely to have the greatest impact, in the most cost effective way possible.

4. The Field will embark on a program to update its equipment and employee skillset to address the likely issues that will accompany new and expanded uses of spectrum. This program will include the expanded use of remotely operated monitoring equipment to supplement field staff, as well as the identification and use of portable devices capable of assessing interference issues in bands expected to experience heavy spectrum use. Upon completion of all required implementation steps, the Commission will first apply the net savings resulting from this reorganization effort to this

[1] Amendment of Part 0 of the Commission's Rules to Reflect Reorganization of the Compliance and Information Bureau, Order, 11 FCC Rcd 1725 (1996).

program, before applying those monies to the agency's general fund. The net savings will not be used to increase the number of full-time non-field-related employees in the headquarters office of the Enforcement Bureau.

5. The Bureau will close its field offices in or near Anchorage, Alaska; Buffalo, New York; Detroit, Michigan; Houston, Texas; Kansas City, Missouri; Norfolk, Virginia; Philadelphia, Pennsylvania; San Diego, California; San Juan, Puerto Rico; Seattle, Washington; and Tampa, Florida. Relatedly, the Enforcement Bureau field offices in or near Atlanta, Georgia; Columbia, Maryland; and San Francisco, California will relocate to FCC-owned properties nearby or in the same metropolitan areas. In addition, recognizing that current work volume does not require full-time employees, the Bureau will contract with local personnel to maintain a field presence in Alaska and Puerto Rico and will also periodically dispatch field agents to Kansas City, Missouri.

6. All Bureau field agents shall have electrical engineering backgrounds.

7. The relocated offices identified in paragraph 5 and the remaining offices in or near New York City, New York; Miami, Florida; Dallas, Texas; Chicago, Illinois; Boston, Massachusetts; Denver, Colorado; Honolulu, Hawaii; New Orleans, Louisiana; Portland, Oregon; and Los Angeles, California will be staffed and equipped to maintain the Commission's Field program.

8. Within 6 weeks of release of this Order, the Bureau will establish procedures for industry and public safety complainants to escalate their complaints within the Field organization.

9. The Commission will continue to work with outside stakeholders to develop a comprehensive policy and enforcement approach to the issue of unlicensed radio broadcasting.

10. The Commission will implement a nationwide outplacement effort to assist all displaced employees to find positions in the public or private sectors, including other vacancies within the Commission for which they are qualified and selected.

11. The amendments adopted herein pertain to agency organization, procedure, and practice. Some of the amendments are administrative updates to rules that were inadvertently not revised during prior agency organization efforts.[2] Other amendments add references to the FCC Web site where parties and the Commission may obtain information more efficiently than they could by the current practice of addressing requests to the Field. The remainder of the amendments conform the rules to the current practice. Consequently, the requirement of notice and comment and the effective date provisions of the Administrative Procedures Act, 5 U.S.C. 553(b) and (d), do not apply. Authority for the amendments adopted herein is contained in Sections 4(f)(1), 4(g), 4(i), 5(b), 5(c)(1) and 303(r) of the Communications Act of 1934, as amended, 47 U.S.C. 154(f)(1), (g), (i), 155(b), 155(c)(1), and 303(r).

III. Procedural Matters

A. Paperwork Reduction Act of 1995

This document does not contain new or modified information collection requirements subject to the Paperwork Reduction Act of 1995 (PRA), Public Law 104–13.

B. Congressional Review Act

The Commission will not send a copy of this Order pursuant to the Congressional Review Act, 5 U.S.C. 801(a)(1)(A), because the adopted rules pertain to agency organization, procedure, and practice.

IV. Ordering Clauses

12. Accordingly, It is ordered that, pursuant to Sections 4(f)(1), 4(g), 4(i), 5(b), 5(c)(1) and 303(r) of the Communications Act of 1934, as amended, 47 U.S.C. 154(f)(1), (g), (i), 155(b), 155(c)(1), and 303(r) the Enforcement Bureau's Field operations be restructured.

13. It is further ordered that the field offices in or near Anchorage, Alaska; Buffalo, New York; Detroit, Michigan; Houston, Texas; Kansas City, Missouri; Norfolk, Virginia; Philadelphia, Pennsylvania; San Diego, California; San Juan, Puerto Rico; Seattle, Washington; and Tampa, Florida be closed. The Bureau will contract with local personnel to maintain a field presence in Alaska and Puerto Rico and will also periodically dispatch field agents to Kansas City, Missouri.

14. It is further ordered that the Enforcement Bureau relocate field offices in or near Atlanta, Georgia; Columbia, Maryland; and San Francisco, California to nearby FCC-owned properties.

15. It is further ordered that all Enforcement Bureau field agents shall have electrical engineering backgrounds.

16. It is further ordered that the Commission devote resources to provide its field staff with the training and equipment to address new interference threats in bands that are currently in use, as well as bands that are not yet widely utilized. The equipment should focus on portable, cost-effective devices as well as remotely-operated spectrum monitoring equipment deployable on a permanent or temporary basis. Upon completion of all required implementation steps, the Commission will first apply the net savings resulting from this reorganization effort to this program, before applying those monies to the agency's general fund. The net savings will not be used to increase the number of full time non-field-related employees in the headquarters office of the Enforcement Bureau.

17. It is further ordered that, within 6 weeks of release of this Order, the Enforcement Bureau will establish procedures for industry and public safety complainants to escalate their complaints within the Field organization.

18. It is further ordered that the Commission will continue to work with outside stakeholders to develop a comprehensive policy and enforcement approach to the issue of unlicensed radio broadcasting.

19. It is further ordered that the Commission implement a nationwide outplacement effort to assist all displaced employees to find positions in the public or private sectors, including other vacancies within the Commission for which they are qualified and selected.

20. It is further ordered that effective upon publication of this Order in the **Federal Register** that Sections 0.111, 0.314, 0.317, 0.401, 0.421, 0.555, 2.106, 2.405, 11.35, 15.239, 18.115, 18.117, 73.688, 73.1030, 73.1690, 74.24, 74.25, 76.613, 78.11, 78.19, 80.59, 80.1067, 90.425, 95.129, 95.208, 95.209, 95.408, 95.409, 97.13, 97.109, 97.203, 97.309, 97.311, and 97.313 of the Commission's rules are amended as indicated in the Appendix.

List of Subjects

47 CFR Part 0

Organization and functions (Government agencies), Reporting and recordkeeping requirements.

47 CFR Part 2

Disaster assistance, Radio.

[2] *See e.g.,* Establishment of the Enforcement Bureau and the Consumer Information Bureau, Order, 14 FCC Rcd 17924 (1999); Establishment of the Public Safety and Homeland Security Bureau and Other Organizational Changes, Order, 21 FCC Rcd 10867 (2006); Amendment of the Commission's Rule Concerning Commercial Radio Operators, Report and Order, 28 FCC Rcd 532, 542–43, para. 20 (2013).

47 CFR Part 11

Radio.

47 CFR Part 15

Communications equipment, Reporting and recordkeeping requirements.

47 CFR Part 18

Medical devices, Reporting and recordkeeping requirements, Scientific equipment.

47 CFR Part 73

Communications equipment, Radio, and Reporting and recordkeeping requirements.

47 CFR Part 74

Radio, Reporting and recordkeeping requirements, and Television.

47 CFR Parts 76 and 78

Cable television, Reporting and recordkeeping requirements.

47 CFR Part 80

Vessels, Marine safety, and Reporting and recordkeeping requirements.

47 CFR Parts 90, 95, and 97

Communications equipment, Radio.

Federal Communications Commission.

Gloria J. Miles,

Federal Register Liaison Officer.

Final Rules

For the reasons discussed in the preamble, the Federal Communications Commission amends 47 CFR parts 0, 2, 11, 15, 18, 73, 74, 76, 78, 80, 90, 95, and 97 as follows:

PART 0—COMMISSION ORGANIZATION

■ 1. The authority citation for part 0 continues to read as follows:

Authority: Sec. 5, 48 Stat. 1068, as amended; 47 U.S.C. 155, 225, unless otherwise noted.

■ 2. Section 0.111 is amended by revising Notes to Paragraphs (a)(1), (a)(2) and (a)(11) to read as follows:

§ 0.111 Functions of the Bureau.

* * * * *

Note To Paragraph (a)(1): The Consumer and Governmental Affairs Bureau has primary responsibility for addressing individual informal complaints from consumers against common carriers (wireline, wireless and international) and against other wireless licensees, and informal consumer complaints involving access to telecommunications services and equipment for persons with disabilities. The International Bureau has primary responsibility for complaints regarding international settlements rules and policies.

* * * * *

Note to paragraph (a)(2): The Consumer and Governmental Affairs Bureau has primary responsibility for addressing individual informal complaints from consumers against non-common carriers subject to the Commission's jurisdiction under Title II of the Communications Act and related provisions.

* * * * *

Note to paragraph (a)(11): The Media Bureau has primary responsibility for complaints regarding children's television programming requirements, and for political and related programming matters and equal employment opportunity matters involving broadcasters, cable operators and other multichannel video programming distributors. The relevant licensing Bureau has primary responsibility for complaints involving tower sitting and the Commission's environmental rules. The Media Bureau has primary responsibility for complaints regarding compliance with conditions imposed on transfers of control and assignments of licenses of Cable Television Relay Service authorizations.

* * * * *

■ 3. Section 0.314 is amended by revising the introductory text to read as follows:

§ 0.314 Additional authority delegated.

The Regional Directors are delegated authority to act upon applications, requests, or other matters, which are not in hearing status, and direct the following activities necessary to conduct investigations or inspections:

* * * * *

■ 4. Section 0.317 is revised to read as follows:

§ 0.317 Record of action taken.

The application, authorization, and other appropriate files of the Enforcement Bureau are designated as the Commission's official records of action taken pursuant to authority delegated under §§ 0.311 and 0.314, and shall constitute the official Commission minutes entry of such actions. The official records of action are maintained in the Reference Information Center in the Consumer and Governmental Affairs Bureau.

■ 5. Section 0.401 is amended by revising paragraph (a)(4) to read as follows:

§ 0.401 Location of Commission offices.

* * * * *

(a) * * *

(4) For the locations of the field offices, contact the Enforcement Bureau.

* * * * *

■ 6. Section 0.421 is revised to read as follows:

§ 0.421 Application forms.

All forms for use in submitting applications for radio authorization, together with instructions and information as to filing such forms, may be obtained at *http://www.fcc.gov/forms*. For information concerning the forms to be used and filing requirements, see part 1 of this chapter and the appropriate substantive rules.

■ 7. Section 0.555 is amended by removing paragraph (a)(2), redesignating paragraph (a)(3) as paragraph (a)(2), and revising newly redesignated paragraph (a)(2) to read as follows:

§ 0.555 Disclosure of record information to individuals.

(a) * * *

(2) Individuals may request that copies of records be sent directly to them. In such cases, individuals must verify their identity as described in § 0.554(b)(2) and provide an accurate return mailing address or email address. Records shall be sent only to that address.

* * * * *

PART 2—FREQUENCY ALLOCATIONS AND RADIO TREATY MATTERS; GENERAL RULES AND REGULATIONS

■ 8. The authority citation for part 2 continues to read as follows:

Authority: 47 U.S.C. 154, 302a, 303, and 336, unless otherwise noted.

■ 9. Section 2.106 is amended by revising paragraph (a) introductory text following US270 as follows:

§ 2.106 Table of Frequency Allocations.

* * * * *

US270 * * *

(a) The peak envelope power of an amateur station shall not exceed 50 watts in the following areas, unless expressly authorized by the FCC after mutual agreement, on a case-by-case basis, between the Regional Director of the applicable field office and the military area frequency coordinator at the applicable military base. For areas (5) through (7), the appropriate military coordinator is located at Peterson AFB, CO.

* * * * *

■ 10. Section 2.405 is amended by revising paragraphs (a) and (c) to read as follows:

§ 2.405 Operation during emergency.

* * * * *

(a) That as soon as possible after the beginning of such emergency use, notice be sent to the Public Safety and

Homeland Security Bureau of the Commission at Washington, D.C., stating the nature of the emergency and the use to which the station is being put, and

* * * * *

(c) That the Public Safety and Homeland Security Bureau of the Commission at Washington, D.C., shall be notified immediately when such special use of the station is terminated: Provided further,

* * * * *

PART 11—EMERGENCY ALERT SYSTEM (EAS)

■ 11. The authority citation for part 11 continues to read as follows:

Authority: 47 U.S.C. 151, 154(i) and (o), 303(r), 544(g) and 606.

■ 12. Section 11.35 is amended by revising paragraph (c) to read as follows:

§ 11.35 Equipment operational readiness.

* * * * *

(c) If repair or replacement of defective equipment is not completed within 60 days, an informal request shall be submitted to the Regional Director of the FCC field office serving the area in which the EAS Participant is located, or in the case of DBS and SDARS providers to the Regional Director of the FCC field office serving the area where their headquarters is located, for additional time to repair the defective equipment. This request must explain what steps have been taken to repair or replace the defective equipment, the alternative procedures being used while the defective equipment is out of service, and when the defective equipment will be repaired or replaced.

PART 15—RADIO FREQUENCY DEVICES

■ 13. The authority citation for part 15 continues to read as follows:

Authority: 47 U.S.C. 154, 302a, 303, 304, 307, 336, 544a, and 549.

■ 14. Section 15.239 is amended by revising paragraph (d) introductory text to read as follows:

§ 15.239 Operation in the band 88–108 MHz.

* * * * *

(d) A custom built telemetry intentional radiator operating in the frequency band 88–108 MHz and used for experimentation by an educational institute need not be certified provided the device complies with the standards in this part and the educational institution notifies the Office of Engineering and Technology, in writing, in advance of operation, providing the following information:

* * * * *

PART 18—INDUSTRIAL, SCIENTIFIC, AND MEDICAL EQUIPMENT

■ 15. The authority citation for part 18 continues to read as follows:

Authority: 47 U.S.C. 4, 301, 302, 303, 304, 307.

■ 16. Section 18.115 is amended by revising paragraphs (b) and (c) to read as follows:

§ 18.115 Elimination and investigation of harmful interference.

* * * * *

(b) If the operator of ISM equipment is notified by the Commission's Regional Director that operation of such equipment is endangering the functioning of a radionavigation or safety service, the operator shall immediately cease operating the equipment. Operation may be resumed on a temporary basis only for the purpose of eliminating the harmful interference. Operation may be resumed on a regular basis only after the harmful interference has been eliminated and approval from the Regional Director obtained.

(c) When notified by the Regional Director that a particular installation is causing harmful interference, the operator or manufacturer shall arrange for an engineer skilled in techniques of interference measurement and control to make an investigation to ensure that the harmful interference has been eliminated. The Regional Director may require the engineer making the investigation to furnish proof of his or her qualifications.

■ 17. Revise § 18.117 to read as follows:

§ 18.117 Report of interference investigation.

(a) An interim report on investigations and corrective measures taken pursuant to § 18.115 of this part shall be filed with the Regional Director of the local FCC office within 30 days of notification of harmful interference. The final report shall be filed with the Regional Director within 60 days of notification.

(b) The date for filing the final report may be extended by the Regional Director when additional time is required to put into effect the corrective measures or to complete the investigation. The request for extension of time shall be accompanied by a progress report showing what has been accomplished to date.

PART 73—RADIO BROADCAST SERVICES

■ 18. The authority citation for part 73 continues to read as follows:

Authority: 47 U.S.C. 154, 303, 334, 336, and 339.

■ 19. Section 73.688 is amended by revising paragraph (c)(2) to read as follows:

§ 73.688 Indicating instruments.

* * * * *

(c) * * *

(2) If conditions beyond the control of the licensee prevent the restoration of the meter to service within the above allowed period, informal request in accordance with § 73.3549 may be filed for such additional time as may be required to complete repairs of the defective instrument.

■ 20. Section 73.1030 is amended by revising paragraph (c)(2) to read as follows:

§ 73.1030 Notifications concerning interference to radio astronomy, research and receiving installations.

* * * * *

(c) * * *

(2) In the event that calculated value of expected field exceeds 10 mV/m (−65.8 dBW/m2) at the reference coordinates, or if there is any question whether field strength levels might exceed the threshold value, advance consultation with the FCC to discuss any protection necessary should be considered. Prospective applicants may communicate with the Public Safety and Homeland Security Bureau.

* * * * *

■ 21. Section 73.1690 is amended by revising paragraph (c)(7)(ii) to read as follows:

§ 73.1690 Modification of transmission systems.

* * * * *

(c) * * *

(7) * * *

(ii) If the station is located in or near a radio quiet zone, radio coordination zone, or a Commission monitoring station (see § 73.1030 and § 0.121(c) of this chapter), the licensee or permittee must have secured written concurrence from the affected radio quiet zone, radio coordination zone, or the Commission's Public Safety and Homeland Security Bureau in the case of a monitoring station, to increase effective radiated power PRIOR to implementation. A copy of that concurrence must be submitted with the license application

to document that concurrence has been received;

* * * * *

PART 74—EXPERIMENTAL RADIO, AUXILIARY, SPECIAL BROADCAST AND OTHER PROGRAM DISTRIBUTIONAL SERVICES

■ 22. The authority citation for part 74 continues to read as follows:

Authority: 47 U.S.C. 154, 302a, 303, 307, 309, 336 and 554.

■ 23. Section 74.24 is amended by revising paragraph (i) to read as follows:

§ 74.24 Short-term operation.

* * * * *

(i) Short-term operation of a remote pickup broadcast base station, a remote pickup automatic relay station, an aural broadcast STL station, an aural broadcast intercity relay station, a TV STL station, a TV intercity relay station or a TV translator relay station in the National Radio Quiet Zone, the Table Mountain Radio Receiving Zone, or near FCC monitoring stations is subject to the same advance notification procedures applicable to regular applications as provided for in § 73.1030 of this chapter and § 74.12, except that inasmuch as short-term operation does not involve an application process, the provisions relating to agency objection procedures shall not apply. It shall simply be necessary for the licensee to contact the potentially affected agency and obtain advance approval for the proposed short-term operation. Where protection to FCC monitoring stations is concerned, approval for short-term operation may be given by the Regional Director of a Commission field facility.

* * * * *

■ 24. Section 74.25 is amended by revising paragraph (d) to read as follows:

§ 74.25 Temporary conditional operating authority.

* * * * *

(d) Operation under this section shall be suspended immediately upon notification from the Commission or by the Regional Director of a Commission field facility, and shall not be resumed until specific authority is given by the Commission or Regional Director. When authorized by the Regional Director, short test operations may be made.

* * * * *

PART 76—MULTICHANNEL VIDEO AND CABLE TELEVISION SERVICE

■ 25. The authority citation for part 76 continues to read as follows:

Authority: 47 U.S.C. 151, 152, 153, 154, 301, 302, 302a, 303, 303a, 307, 308, 309, 312, 315, 317, 325, 338, 339, 340, 341, 503, 521, 522, 531, 532, 534, 535, 536, 537, 543, 544, 544a, 545, 548, 549, 552, 554, 556, 558, 560, 561, 571, 572, 573.

■ 26. Section 76.613 is amended by revising paragraphs (c) and (d) to read as follows:

§ 76.613 Interference from a multichannel video programming distributor (MVPD).

* * * * *

(c) If harmful interference to radio communications involving the safety of life and protection of property cannot be promptly eliminated by the application of suitable techniques, operation of the offending MVPD or appropriate elements thereof shall immediately be suspended upon notification by the Regional Director for the Commission's local field office, and shall not be resumed until the interference has been eliminated to the satisfaction of the Regional Director. When authorized by the Regional Director, short test operations may be made during the period of suspended operation to check the efficacy of remedial measures.

(d) The MVPD may be required by the Regional Director to prepare and submit a report regarding the cause(s) of the interference, corrective measures planned or taken, and the efficacy of the remedial measures.

PART 78—CABLE TELEVISION RELAY SERVICE

■ 27. The authority citation for part 78 continues to read as follows:

Authority: Secs. 2, 3, 4, 301, 303, 307, 308, 309, 48 Stat., as amended, 1064, 1065, 1066, 1081, 1082, 1083, 1084, 1085; 47 U.S.C. 152, 153, 154, 301, 303, 307, 308, 309.

■ 28. Section 78.11 is amended by revising paragraph (e) to read as follows:

§ 78.11 Permissible service.

* * * * *

(e) The license of a CARS pickup station authorizes the transmission of program material, and related communications necessary to the accomplishment of such transmission, from the scenes of events occurring in places other than a cable television studio or the studio of another eligible system, to the studio, headend, or transmitter of its associated cable television system or other eligible system, or to such other cable television or other eligible systems as are carrying the same program material. CARS pickup stations may be used to provide temporary CARS studio-to-headend links, studio-to-transmitter links, or CARS circuits consistent with this part without further authority of the Commission: Provided, however, That prior Commission authority shall be obtained if the transmitting antenna to be installed will increase the height of any natural formation or manmade structure by more than 6.1 meters (20 feet) and will be in existence for a period of more than 2 consecutive days: And provided, further, That if the transmitting equipment is to be operated for more than 1 day outside of the area to which the CARS station has been licensed, the Commission, the Regional Director for the area in which the station is licensed to operate, and the Regional Director for the area in which the equipment will be temporarily operated shall be notified at least 1 day prior to such operation. If the decision to continue operation for more than 1 day is not made until the operation has begun, notice shall be given to the Commission and the relevant Regional Directors within 1 day after such decision. In all instances, the Commission and the relevant Regional Directors shall be notified when the transmitting equipment has been returned to its licensed area.

* * * * *

■ 29. Section 78.19 is amended is amended by revising paragraph (e)(2) to read as follows:

§ 78.19 Interference.

* * * * *

(e) * * *

(2) In the event that calculated value of expected field exceeds 10 mV/m (−65.8 dBW/m2) at the reference coordinates, or if there is any question whether field strength levels might exceed the threshold value, advance consultation with the FCC to discuss any protection necessary should be considered. Prospective applicants may communicate with the Public Safety and Homeland Security Bureau, Federal Communications Commission, Washington, DC 20554.

* * * * *

PART 80—STATIONS IN THE MARITIME SERVICES

■ 30. The authority citation for part 80 continues to read as follows:

Authority: Secs. 4, 303, 307(e), 309, and 332, 48 Stat. 1066, 1082, as amended; 47 U.S.C. 154, 303, 307(e), 309, and 332, unless otherwise noted. Interpret or apply 48 Stat. 1064–1068, 1081–1105, as amended; 47 U.S.C. 151–155, 301–609; 3 UST 3450, 3 UST 4726, 12 UST 2377.

■ 31. Section 80.59 is amended by revising paragraph (d)(1) introductory text to read as follows:

§ 80.59 Compulsory ship inspections.

* * * * *

(d) *Waiver of annual inspection.* (1) The Commission may, upon a finding that the public interest would be served, grant a waiver of the annual inspection required by Section 362(b) of the Communications Act, 47 U.S.C. 360(b), for a period of not more than 90 days for the sole purpose of enabling a United States vessel to complete its voyage and proceed to a port in the United States where an inspection can be held. An informal application must be submitted by the ship's owner, operator or authorized agent. The application must be submitted to the Commission's Wireless Telecommunications Bureau at least three days before the ship's arrival. The application must include:

* * * * *

■ 32. Section 80.1067 is amended by revising paragraph (a) to read as follows:

§ 80.1067 Inspection of station.

(a) Ships must have the required equipment inspected at least once every 12 months by an FCC-licensed technician holding a GMDSS Radio Maintainer's License. If the ship passes the inspection the technician will issue a Safety Certificate. Safety Certificates may be obtained from the Commission's National Call Center at 1–888–CALL FCC (1–888–225–5322). The effective date of the ship Safety Certificate is the date the station is found to be in compliance or not later than one business day later. The FCC-licensed technician must use the latest FCC Information Bulletin, How to Conduct a GMDSS Inspection, which may be obtained at *http://www.fcc.gov*.

* * * * *

PART 90—PRIVATE LAND MOBILE RADIO SERVICES

■ 33. The authority citation for part 90 continues to read as follows:

Authority: Sections 4(i), 11, 303(g), 303(r), and 332(c)(7) of the Communications Act of 1934, as amended, 47 U.S.C. 154(i), 161, 303(g), 303(r), and 332(c)(7), and Title VI of the Middle Class Tax Relief and Job Creation Act of 2012, Pub. L. 112–96, 126 Stat. 156.

■ 34. Section 90.425 is amended by revising paragraph (a)(4)(ii) to read as follows:

§ 90.425 Station identification.

* * * * *

(a) * * *

(4) * * *

(ii) In the Industrial/Business Pool, licensees may request the Commission's Wireless Telecommunications Bureau to approve the use of special mobile unit identifiers in lieu of the assigned call sign. Such requests, however, will not be granted where it appears that harmful interference to international operations may be caused by stations below 50 MHz, or by stations operating in areas within 80 km (50 miles) of an international boundary, or where it appears that the proposed method of identification will not adequately distinguish the mobile units of the applicant from the mobile units of other licensees in the area.

* * * * *

PART 95—PERSONAL RADIO SERVICES

■ 35. The authority citation for part 95 continues to read as follows:

Authority: 47 U.S.C. 154, 301, 302(a), 303, and 307(e).

■ 36. Revise § 95.129 to read as follows:

§ 95.129 Station equipment.

Every station in a GMRS system must use transmitters the FCC has certificated for use in the GMRS. Transmitters that have been certified for use in the GMRS may be found on the FCC Web site at *https://apps.fcc.gov/oetcf/eas/reports/GenericSearch.cfm*. All station equipment in a GMRS system must comply with the technical rules in part 95.

■ 37. Section 95.208 is amended by revising paragraph (d) to read as follows:

§ 95.208 (R/C Rule 8) How high may I put my antenna?

* * * * *

(d) If your R/C station is located near an airport, and if you antenna structure is more than 6.1 meters (20 feet) high, your may have to obey additional restrictions. The highest point of your antenna must not exceed one meter above the airport elevation for every hundred meters of distance from the nearest point of the nearest airport runway. Differences in ground elevation between your antenna and the airport runway may complicate this formula. If your R/C station is near an airport, see *http://wireless2.fcc.gov/UlsApp/AsrSearch/towairSearch.jsp* to help you figure the maximum allowable height of your antenna. Consult part 17 of this chapter for more information.

* * * * *

■ 38. Section 95.209 is amended by revising paragraph (b) to read as follows:

§ 95.209 (R/C Rule 9) What equipment may I use at my R/C station?

* * * * *

(b) You may examine a list of certificated transmitters on the FCC Web site at *http://www.fcc.gov/encyclopedia/radio-control-rc-radio-service*.

* * * * *

■ 39. Section 95.408 is amended by revising paragraph (d) to read as follows:

§ 95.408 (CB Rule 8) How high may I put my antenna?

* * * * *

(d) If your CB station is located near an airport, and if your antenna structure is more than 6.1 meters (20 feet) high, you may have to obey additional restrictions. The highest point of your antenna must not exceed one meter above the airport elevation for every hundred meters of distance from the nearest point of the nearest airport runway. Differences in ground elevation between your antenna and the airport runway may complicate this formula. If your CB station is near an airport, see *http://wireless2.fcc.gov/UlsApp/AsrSearch/towairSearch.jsp* to help you figure the maximum allowable height of your antenna. Consult part 17 of this chapter for more information.

* * * * *

■ 40. Section 95.409 is amended by revising paragraph (a) to read as follows:

§ 95.409 (CB Rule 9) What equipment may I use at my CB station?

(a) You must use an FCC certificated CB transmitter at your CB station. You can identify an FCC certificated transmitter by the certification label placed on it by the manufacturer. You may examine a list of certificated equipment on the FCC Web site at *http://www.fcc.gov/encyclopedia/citizens-band-cb-service*. Use of a transmitter which is not FCC certificated voids your authority to operate the station.

* * * * *

PART 97—AMATEUR RADIO SERVICE

■ 41. The authority citation for part 97 continues to read as follows:

Authority: 48 Stat. 1066, 1082, as amended; 47 U.S.C. 154, 303. Interpret or apply 48 Stat. 1064–1068, 1081–1105, as amended; 47 U.S.C. 151–155, 301–609, unless otherwise noted.

■ 42. Section 97.13 is amended by revising paragraph (b) to read as follows:

§ 97.13 Restrictions on station location.

* * * * *

(b) A station within 1600 m (1 mile) of an FCC monitoring facility must protect that facility from harmful interference. Failure to do so could result in imposition of operating restrictions upon the amateur station pursuant to § 97.121. Geographical

coordinates of the facilities that require protection are listed in § 0.121(c) of this chapter.

* * * * *

■ 43. Section 97.109 is amended by revising paragraph (d) to read as follows:

§ 97.109 Station control.

* * * * *

(d) When a station is being automatically controlled, the control operator need not be at the control point. Only stations specifically designated elsewhere in this part may be automatically controlled. Automatic control must cease upon notification by a Regional Director that the station is transmitting improperly or causing harmful interference to other stations. Automatic control must not be resumed without prior approval of the Regional Director.

■ 44. Section 97.203 is amended by revising paragraph (f) to read as follows:

§ 97.203 Beacon station.

* * * * *

(f) A beacon must cease transmissions upon notification by a Regional Director that the station is operating improperly or causing undue interference to other operations. The beacon may not resume transmitting without prior approval of the Regional Director.

* * * * *

■ 45. Section 97.309 is amended by revising paragraph (b) introductory text to read as follows:

§ 97.309 RTTY and data emission codes.

* * * * *

(b) Where authorized by §§ 97.305(c) and 97.307(f), a station may transmit a RTTY or data emission using an unspecified digital code, except to a station in a country with which the United States does not have an agreement permitting the code to be used. RTTY and data emissions using unspecified digital codes must not be transmitted for the purpose of obscuring the meaning of any communication. When deemed necessary by a Regional Director to assure compliance with the FCC Rules, a station must:

* * * * *

■ 46. Section 97.311 is amended by revising paragraph (c) introductory text to read as follows:

§ 97.311 SS emission types.

* * * * *

(c) When deemed necessary by a Regional Director to assure compliance with this part, a station licensee must:

* * * * *

■ 47. Section 97.313 is amended by revising paragraph (f) to read as follows:

§ 97.313 Transmitter power standards.

* * * * *

(f) No station may transmit with a transmitter power exceeding 50 W PEP on the UHF 70 cm band from an area specified in paragraph (a) of footnote US270 in § 2.106, unless expressly authorized by the FCC after mutual agreement, on a case-by-case basis, between the Regional Director of the applicable field facility and the military area frequency coordinator at the applicable military base. An Earth station or telecommand station, however, may transmit on the 435–438 MHz segment with a maximum of 611 W effective radiated power (1 kW equivalent isotropically radiated power) without the authorization otherwise required. The transmitting antenna elevation angle between the lower half-power (− 3 dB relative to the peak or antenna bore sight) point and the horizon must always be greater than 10°.

* * * * *

[FR Doc. 2015–21963 Filed 9–4–15; 8:45 am]

BILLING CODE 6712–01–P

DEPARTMENT OF DEFENSE

GENERAL SERVICES ADMINISTRATION

NATIONAL AERONAUTICS AND SPACE ADMINISTRATION

48 CFR Parts 1, 2, 3, 4, 6, 7, 8, 9, 10, 12, 13, 15, 16, 17, 19, 22, 25, 28, 30, 42, 50, 52, and 53

[FAC 2005–83; FAR Case 2014–022; Correction; Docket 2014–0022; Sequence No. 1]

RIN 9000–AM80

Federal Acquisition Regulation; Inflation Adjustment of Acquisition-Related Thresholds; Correction

AGENCY: Department of Defense (DoD), General Services Administration (GSA), and National Aeronautics and Space Administration (NASA).

ACTION: Final rule; correction.

SUMMARY: DoD, GSA, and NASA are issuing a correction to FAR Case 2014–022; Inflation Adjustment of Acquisition-Related Thresholds (Item I), which was published in the **Federal Register** at 80 FR 38293, July 2, 2015. The changes to 7.104 and 7.107 are removed from the case because those thresholds are controlled by the Small Business Administration. The other changes are made to correct errors.

DATES: *Effective:* October 1, 2015.

FOR FURTHER INFORMATION CONTACT: Mr. Michael O. Jackson, Procurement Analyst, at 202–208–4949, for clarification of content. For information pertaining to status or publication schedules, contact the Regulatory Secretariat at 202–501–4755. Please cite FAC 2005–83; FAR Case 2014–022; Correction.

SUPPLEMENTARY INFORMATION:

Corrections

In rule FR Doc. 2015–16206 published in the **Federal Register** at 80 FR 38293, July 2, 2015, make the following corrections:

7.104 and 7.107 [Corrected]

■ 1. On page 38296, in the center column, remove Part 7 heading and amendatory instruction numbers 14 and 15, amending sections 7.104 and 7.107 respectively.

■ 2. On pages 38296 through 38301, renumber amendatory instruction numbers 16 through 95, as 14 through 93 respectively.

13.003 [Corrected]

■ 3. On page 38297, first column, correct amendatory instruction number 30.a., now renumbered as 28.a., to read as follows:

■ a. Removing from paragraph (b)(1) ''$3,000'' and ''$15,000'' and adding ''$3,500'' and ''$20,000'' in their places, respectively.

52.212–5 [Corrected]

■ 4. On page 38300, first column, in paragraph (e)(1)(ii)(C), second line, remove ''(Oct 2015)'' and add ''(Oct 2014)'' in its place.

■ 5. On page 38300, first column, in paragraph (e)(1)(ii)(M), first line, remove ''52.222–4'' and add ''52.222–54'' in its place.

Authority: 40 U.S.C. 121(c); 10 U.S.C. chapter 137; and 51 U.S.C. 20113.

William Clark,

Director, Office of Government-wide Acquisition Policy, Office of Acquisition Policy, Office of Government-wide Policy.

[FR Doc. 2015–22060 Filed 9–4–15; 8:45 am]

BILLING CODE 6820–EP–P

Proposed Rules

Federal Register
Vol. 80, No. 173
Tuesday, September 8, 2015

This section of the FEDERAL REGISTER contains notices to the public of the proposed issuance of rules and regulations. The purpose of these notices is to give interested persons an opportunity to participate in the rule making prior to the adoption of the final rules.

DEPARTMENT OF HOMELAND SECURITY

Coast Guard

33 CFR Part 165

[Docket Number USCG–2015–0790]

RIN 1625–AA00

Safety Zone; Jacksonville Sea and Sky Spectacular, Atlantic Ocean; Jacksonville Beach, FL

AGENCY: Coast Guard, DHS.

ACTION: Notice of proposed rulemaking.

SUMMARY: The Coast Guard proposes to establish a temporary safety zone for certain waters of the Atlantic Ocean off Jacksonville Beach, Florida during the Jacksonville Sea and Sky Spectacular air show. The event is scheduled to take place from October 22 through October 25, 2015. This proposed rulemaking would prohibit persons and vessels from being in the safety zone unless authorized by the Captain of the Port Jacksonville or a designated representative. The Coast Guard invites your comments on this proposed rulemaking.

DATES: Comments and related material must be received by the Coast Guard on or before October 8, 2015.

ADDRESSES: You may submit comments identified by docket number USCG–2015–0790 using any one of the following methods:

(1) *Federal eRulemaking Portal: http://www.regulations.gov.*

(2) *Fax:* 202–493–2251.

(3) *Mail:* Docket Management Facility (M–30), U.S. Department of Transportation, West Building Ground Floor, Room W12–140, 1200 New Jersey Avenue SE., Washington, DC 20590–0001.

(4) *Hand delivery:* Same as mail address above, between 9 a.m. and 5 p.m., Monday through Friday, except federal holidays. The telephone number is 202–366–9329.

To avoid duplication, please use only one of these four methods. See the ''Public Participation and Request for Comments'' portion of the **SUPPLEMENTARY INFORMATION** section below for further instructions on submitting comments.

FOR FURTHER INFORMATION CONTACT: If you have questions about this proposed rulemaking, call or email Lieutenant Allan Storm, Sector Jacksonville, Waterways Management Division, U.S. Coast Guard; telephone 904–564–7563, email *Allan.H.Storm@uscg.mil.* If you have questions on viewing or submitting material to the docket, call Ms. Cheryl Collins, Program Manager, Docket Operations, telephone 202–366–9826.

SUPPLEMENTARY INFORMATION:

I. Table of Abbreviations

CFR Code of Federal Regulations
DHS Department of Homeland Security
E.O. Executive order
FR **Federal Register**
NPRM Notice of proposed rulemaking
Pub. L. Public Law
§ Section
U.S.C. United States Code

II. Background, Purpose, and Legal Basis

On December 31, 2014, the City of Jacksonville submitted a marine event application to the Coast Guard for the Jacksonville Sea and Sky Spectacular air show that will take place from 10 a.m. to 4:30 p.m. on October 22 through October 25, 2015. The air show will consist of various flight demonstrations over the Atlantic Ocean, just offshore from Jacksonville Beach, FL. Over the years, there have been unfortunate instances of aircraft mishaps that involve crashing during performances at various air shows around the world. During aircraft crashes, there is typically a wide area of scattered debris that can damage property or cause significant injury or death to the public observing the air shows. The Captain of the Port (COTP) Jacksonville has determined that a safety zone is necessary to protect the general public from hazards associated with aerial flight demonstrations.

The purpose of the rulemaking is to ensure the safety of vessels and persons during the air show on the navigable waters of the Atlantic Ocean in Jacksonville Beach, FL. The Coast Guard proposes this rulemaking under authority in 33 U.S.C. 1231.

III. Discussion of Proposed Rule

The COTP proposes to establish a safety zone from 9 a.m. to 5:30 p.m. on October 22 through October 25, 2015. The safety zone will encompass all waters within an area approximately three nautical miles parallel to the shoreline, and one half mile out into the Atlantic Ocean offshore from Jacksonville Beach, Florida. The duration of the zone is intended to ensure the safety of the public and these navigable waters before, during, and after the aerial flight demonstrations. No vessel or person would be permitted to enter the safety zone without obtaining permission from the COTP or a designated representative. The regulatory text the Coast Guard is proposing appears at the end of this document.

IV. Regulatory Analyses

The Coast Guard developed this proposed rule after considering numerous statutes and executive orders (E.O.s) related to rulemaking. A summary of the statutory analyses, analyses of E.O.s, and discussion of First Amendment rights of protestors is included below.

A. Regulatory Planning and Review

E.O.s 12866 and 13563 direct agencies to assess the costs and benefits of available regulatory alternatives and, if regulation is necessary, to select regulatory approaches that maximize net benefits. E.O. 13563 emphasizes the importance of quantifying both costs and benefits, of reducing costs, of harmonizing rules, and of promoting flexibility. This NPRM has not been designated a ''significant regulatory action,'' under E.O. 12866. Accordingly, the NPRM has not been reviewed by the Office of Management and Budget.

This regulatory action determination is based on the size, location, duration, and time-of-day of the safety zone. Vessel traffic would be able to safely transit around this safety zone which would impact a small designated area of the Atlantic Ocean for eight and a half hours on each of the three days the air show is occurring. Moreover, the Coast Guard would issue a Broadcast Notice to Mariners via VHF–FM marine channel 16 about the zone, and the rule would allow vessels to seek permission to enter the zone.

B. Impact on Small Entities

The Regulatory Flexibility Act of 1980, 5 U.S.C. 601–612, as amended, requires Federal agencies to consider the potential impact of regulations on small entities during rulemaking. The term ''small entities'' comprises small businesses, not-for-profit organizations that are independently owned and operated and are not dominant in their fields, and governmental jurisdictions with populations of less than 50,000. The Coast Guard certifies under 5 U.S.C. 605(b) that this proposed rule would not have a significant economic impact on a substantial number of small entities.

While some owners or operators of vessels intending to transit the safety zone may be small entities, for the reasons stated in section IV.A, this proposed rule would not have a significant economic impact on any vessel owner or operator.

If you think that your business, organization, or governmental jurisdiction qualifies as a small entity and that this rule would have a significant economic impact on it, please submit a comment (see **ADDRESSES**) explaining why you think it qualifies and how and to what degree this rule would economically affect it.

Under section 213(a) of the Small Business Regulatory Enforcement Fairness Act of 1996 (Pub. L. 104–121), we want to assist small entities in understanding this proposed rule. If the rule would affect your small business, organization, or governmental jurisdiction and you have questions concerning its provisions or options for compliance, please contact the person listed in the **FOR FURTHER INFORMATION CONTACT** section. The Coast Guard will not retaliate against small entities that question or complain about this proposed rule or any policy or action of the Coast Guard.

C. Collection of Information

This proposed rule would not call for a new collection of information under the Paperwork Reduction Act of 1995 (44 U.S.C. 3501–3520).

D. Federalism and Indian Tribal Governments

A rule has implications for federalism under E.O. 13132, Federalism, if it has a substantial direct effect on the States, on the relationship between the national government and the States, or on the distribution of power and responsibilities among the various levels of government. We have analyzed this proposed rule under that Order, and have determined that it is consistent with the fundamental federalism principles and preemption requirements described in E.O. 13132.

Also, this proposed rule does not have tribal implications under E.O. 13175, Consultation and Coordination with Indian Tribal Governments, because it would not have a substantial direct effect on one or more Indian tribes, on the relationship between the Federal Government and Indian tribes, or on the distribution of power and responsibilities between the Federal Government and Indian tribes. If you believe this proposed rule has implications for federalism or Indian tribes, please contact the person listed in the **FOR FURTHER INFORMATION CONTACT** section above.

E. Unfunded Mandates Reform Act

The Unfunded Mandates Reform Act of 1995 (2 U.S.C. 1531–1538) requires Federal agencies to assess the effects of their discretionary regulatory actions. In particular, the Act addresses actions that may result in the expenditure by a State, local, or tribal government, in the aggregate, or by the private sector of $100,000,000 (adjusted for inflation) or more in any one year. Though this proposed rule would not result in such an expenditure, the Coast Guard discusses the effects of this rule elsewhere in this preamble.

F. Environment

The Coast Guard analyzed this proposed rule under Department of Homeland Security Management Directive 023–01 and Commandant Instruction M16475.lD, which guide the Coast Guard in complying with the National Environmental Policy Act of 1969 (42 U.S.C. 4321–4370f), and have made a preliminary determination that this action is one of a category of actions that do not individually or cumulatively have a significant effect on the human environment. This proposed rule involves a safety zone that will help protect the general public from hazards associated with aerial flight demonstrations occurring during the air show, and will be in effect from 9 a.m. to 5:30 p.m. on October 22 through October 25, 2015.

It is categorically excluded from further review under paragraph 34(g) of Figure 2–1 of Commandant Instruction M16475.lD. A preliminary environmental analysis checklist supporting this determination and a Categorical Exclusion Determination are available in the docket where indicated under **ADDRESSES**. We seek any comments or information that may lead to the discovery of a significant environmental impact from this proposed rule.

G. Protest Activities

The Coast Guard respects the First Amendment rights of protesters. Protesters are asked to contact the person listed in the **FOR FURTHER INFORMATION CONTACT** section to coordinate protest activities so that your message can be received without jeopardizing the safety or security of people, places, or vessels.

V. Public Participation and Request for Comments

We encourage you to participate in this rulemaking by submitting comments and related materials. All comments received will be posted without change to *http://www.regulations.gov* and will include any personal information you have provided.

A. Submitting Comments

If you submit a comment, please include the docket number for this rulemaking, indicate the specific section of this document to which each comment applies, and provide a reason for each suggestion or recommendation. To submit your comment online, go to *http://www.regulations.gov,* type the docket number in the ''SEARCH'' box and click ''SEARCH.'' Click on the comment option on the line associated with this NPRM. As stated in the **ADDRESSES** section, you may also submit your comments by fax, mail, or hand delivery. Please use only one of these four submittal methods.

The Coast Guard views public participation as essential to effective rulemaking, and will consider all comments and material received during the comment period. Your comment can help shape the outcome of this rulemaking. If you go to the online docket by following instructions in the next paragraph, and sign up for email alerts, you will be notified whenever comments are submitted or a final rule is published.

B. Viewing Comments and Documents

To view comments, as well as documents mentioned in this preamble as being available in the docket, go to *http://www.regulations.gov,* type the docket number in the ''SEARCH'' box and click ''SEARCH.'' Click on the Open Docket Folder option on the line associated with this notice of proposed rulemaking. You may also visit the Docket Management Facility in Room W12–140 on the ground floor of the Department of Transportation West Building, 1200 New Jersey Avenue SE., Washington, DC 20590, between 9 a.m. and 5 p.m., Monday through Friday, except Federal holidays.

C. Privacy Act

Anyone can search the electronic form of comments received into any of our dockets by the name of the individual submitting the comment (or signing the comment, if submitted on behalf of an association, business, labor union, etc.). You may review a Privacy Act notice regarding our public dockets in the January 17, 2008, issue of the **Federal Register** (73 FR 3316). We allow anonymous submissions.

List of Subjects in 33 CFR Part 165

Harbors, Marine safety, Navigation (water), Reporting and recordkeeping requirements, Security measures, Waterways.

For the reasons discussed in the preamble, the Coast Guard proposes to amend 33 CFR part 165 as follows:

PART 165—REGULATED NAVIGATION AREAS AND LIMITED ACCESS AREAS

■ 1. The authority citation for part 165 continues to read as follows:

Authority: 33 U.S.C. 1231; 50 U.S.C. 191; 33 CFR 1.05–1, 6.04–1, 6.04–6, and 160.5; Department of Homeland Security Delegation No. 0170.1.

■ 2. Add § 165.T07–0790 to subpart F under the undesignated center heading Seventh Coast Guard District to read as follows:

§ 165.T07–0790 Safety Zone; Jacksonville Sea and Sky Spectacular, Atlantic Ocean, Jacksonville Beach, FL.

(a) *Regulated Area.* The following regulated area is a safety zone located offshore from Jacksonville Beach, FL. All waters of the Atlantic Ocean encompassed within an imaginary line connecting the following points: Starting at Point 1 in position 30°15′52.3″ N., 081°23′0.18″ W.; thence east to Point 2 in position 30°15′57.91″ N., 081°22′24.22″ W.; thence north to Point 3 in position 30°18′40.81″ N., 081°22′57.97″ W.; thence west to Point 4 in position 30°18′35.19″ N. 081°23′33.93″ W.; thence south back to origin.

(b) *Definition.* The term ''designated representative'' means Coast Guard Patrol Commanders, including Coast Guard coxswains, petty officers, and other officers operating Coast Guard vessels, and Federal, state, and local officers designated by or assisting the Captain of the Port Jacksonville in the enforcement of the regulated area.

(c) *Regulations.* (1) All persons and vessels are prohibited from entering, transiting through, anchoring in, or remaining within the regulated area unless authorized by the Captain of the Port Jacksonville or a designated representative.

(2) Persons and vessels desiring to enter, transit through, anchor in, or remain within the regulated area may contact the Captain of the Port Jacksonville by telephone at 904–564–7511, or a designated representative via VHF–FM radio on channel 16, to request authorization. If authorization to enter, transit through, anchor in, or remain within the regulated area is granted by the Captain of the Port Jacksonville or a designated representative, all persons and vessels receiving such authorization must comply with the instructions of the Captain of the Port Jacksonville or a designated representative.

(3) The Coast Guard will provide notice of the regulated area through Broadcast Notice to Mariners via VHF—FM channel 16.

(d) *Effective date and enforcement periods.* This rule is effective from October 22, 2015 through October 25, 2015 and will be enforced daily from 9 a.m. to 5:30 p.m. on October 22, 2015 through October 25, 2015.

Dated: August 26, 2015.

J.F. Dixon,

Captain, U.S. Coast Guard, Captain of the Port Jacksonville.

[FR Doc. 2015–22581 Filed 9–4–15; 8:45 am]

BILLING CODE 9110–04–P

ENVIRONMENTAL PROTECTION AGENCY

40 CFR Parts 9, 22, 85, 86, 600, 1033, 1036, 1037, 1039, 1042, 1065, 1066, and 1068

DEPARTMENT OF TRANSPORTATION

National Highway Traffic Safety Administration

49 CFR Parts 512, 523, 534, 535, 537, and 583

[EPA–HQ–OAR–2014–0827; NHTSA–2014–0132; FRL–9933–57–OAR]

RIN 2060–AS16; RIN 2127–AL52

Greenhouse Gas Emissions and Fuel Efficiency Standards for Medium- and Heavy-Duty Engines and Vehicles—Phase 2; Extension of Comment Period

AGENCY: Environmental Protection Agency (EPA) and National Highway Traffic Safety Administration (NHTSA), DOT.

ACTION: Proposed rule; extension of comment period.

SUMMARY: The Environmental Protection Agency (EPA) and the National Highway Traffic Safety Administration (NHTSA) are extending the comment period for the joint proposed rules ''Greenhouse Gas Emissions and Fuel Efficiency Standards for Medium- and Heavy-Duty Engines and Vehicles—Phase 2,'' and also for NHTSA's Draft Environmental Impact Statement (DEIS). The proposed rules were published in the **Federal Register** on July 13, 2015. The comment period for the proposed rules was to end on September 17, 2015. The DEIS was published to a NHTSA Docket on June 19, 2015, and the comment period for that document was to end on August 31, 2015. The purpose of this action is to extend the comment period for the proposed rules and the DEIS to October 1, 2015.

DATES: The comment period for the proposed rule published July 13, 2015 (80 FR 40139) is extended. Written comments for both documents must be received on or before October 1, 2015.

ADDRESSES: For EPA, direct your comments to Docket number EPA–HQ–OAR–2014–0827. For NHTSA, direct your comments to Docket number NHTSA–2014–0132. For NHTSA's DEIS, direct your comments to Docket number NHTSA–2014–0074. Comments may be submitted using the *www.regulations.gov* Web site, or by mail to the addresses below.

EPA: Air and Radiation Docket and Information Center, EPA Docket Center, EPA/DC, EPA WJC West Building, 1301 Constitution Ave. NW., Room 3334, Washington, DC. The Public Reading Room is open from 8:30 a.m. to 4:30 p.m., Monday through Friday, excluding legal holidays. The telephone number for the Public Reading Room is (202) 566–1744, and the telephone number for the Air Docket is (202) 566–1742.

NHTSA: Docket Management Facility, M–30, U.S. Department of Transportation, West Building, Ground Floor, Rm. W12–140, 1200 New Jersey Avenue SE., Washington, DC 20590. The telephone number for the docket management facility is (202) 366–9324. The docket management facility is open between 9 a.m. and 5 p.m. Eastern Time, Monday through Friday, except Federal Holidays.

FOR FURTHER INFORMATION CONTACT: Questions concerning the NHTSA proposed rule should be addressed to NHTSA: Ryan Hagen or Analiese Marchesseault, Office of Chief Counsel, National Highway Traffic Safety Administration, 1200 New Jersey Avenue SE., Washington, DC 20590. Telephone: (202) 366–2992. Questions concerning the EPA proposed rule

should be addressed to EPA: Tad Wysor, Office of Transportation and Air Quality, Assessment and Standards Division (ASD), Environmental Protection Agency, 2000 Traverwood Drive, Ann Arbor, MI 48105; telephone number: (734) 214–4332; fax number: (734) 214–4050; email address: *wysor.tad(at)epa.gov.* You may learn more about the jointly proposed rules by visiting NHTSA's or EPA's Web sites at *http://www.nhtsa.gov/fuel-economy* or *http://www.epa.gov/otaq/climate/regs-heavy-duty.htm* or by searching the rulemaking dockets (NHTSA–2014–0132; EPA–HQ–OAR–2014–0827) at *www.regulations.gov.*

SUPPLEMENTARY INFORMATION: In response to requests for an extension, we are extending the public comment period for the Heavy-Duty Phase 2 Notice of Proposed Rulemaking (80 FR 40139, July 13, 2015; also available in Docket Nos. EPA–HQ–OAR–2014–0827 and NHTSA–2014–0132) to October 1, 2015. As NHTSA published (to Docket No. NHTSA–2014–0074) an accompanying DEIS for NHTSA's proposed rule, we are also extending the comment period for that document to October 1, 2015. This extension will provide the public additional time to provide comment on the proposed rules and DEIS. Both the proposed rules and the DEIS are available at *www.regulations.gov.* Instructions for submitting comments to either EPA or NHTSA are described in the Public Participation section of the Notice of Proposed Rulemaking.

In this joint proposal, there are many issues common to both EPA's and NHTSA's proposals. For the convenience of all parties, comments submitted to the EPA docket will be considered comments submitted to the NHTSA docket, and vice versa. An exception is that comments submitted to the NHTSA docket on NHTSA's (DEIS) will not be considered submitted to the EPA docket. Therefore, the public only needs to submit comments to either one of the two agency dockets, although they may submit comments to both if they so choose. Comments that are submitted for consideration by one agency should be identified as such, and comments that are submitted for consideration by both agencies should be identified as such. Absent such identification, each agency will exercise its best judgment to determine whether a comment is submitted on its proposal.

Dated: August 27, 2015.

Raymond R. Posten,

Associate Administrator for Rulemaking, National Highway Traffic Safety Administration.

Dated: August 31, 2015.

Benjamin Hengst,

Associate Director, Office of Transportation and Air Quality Environmental Protection Agency.

[FR Doc. 2015–22028 Filed 9–4–15; 8:45 am]

BILLING CODE 6560–50–P

ENVIRONMENTAL PROTECTION AGENCY

40 CFR Part 52

[EPA–R10–OAR–2015–0447; FRL–9933–44–Region 10]

Approval and Promulgation of Air Quality Implementation Plans; Alaska; Transportation Conformity State Implementation Plan

AGENCY: Environmental Protection Agency (EPA).

ACTION: Proposed rule.

SUMMARY: The Environmental Protection Agency (EPA) is approving a State Implementation Plan (SIP) revision submitted by the State of Alaska (the State). The submission addresses transportation conformity requirements. EPA is approving the submission in accordance with the requirements of the Clean Air Act (the Act).

DATES: Comments must be received on or before October 8, 2015.

ADDRESSES: Submit your comments, identified by Docket ID No. EPA–R10–OAR–2015–0447, by any of the following methods:

- *www.regulations.gov:* Follow the on-line instructions for submitting comments.
- *Email: pepple.karl@epa.gov.*
- *Mail:* Karl Pepple, U.S. EPA Region 10, Office of Air, Waste and Toxics, AWT–150, 1200 Sixth Avenue, Suite 900, Seattle, WA 98101.
- *Hand Delivery/Courier:* U.S. EPA Region 10, 1200 Sixth Avenue, Suite 900, Seattle, WA 98101. Attention: Karl Pepple, Office of Air, Waste and Toxics, AWT–150. Such deliveries are only accepted during normal hours of operation, and special arrangements should be made for deliveries of boxed information.

Please see the direct final rule which is located in the Rules section of this **Federal Register** for detailed instructions on how to submit comments.

FOR FURTHER INFORMATION CONTACT: Karl Pepple at telephone number: (206) 553–1778, email address: *pepple.karl@epa.gov,* or the above EPA, Region 10 address.

SUPPLEMENTARY INFORMATION: For further information, please see the direct final action, of the same title, which is located in the Rules section of this **Federal Register**. The EPA is approving the State's SIP revision as a direct final rule without prior proposal because the EPA views this as a noncontroversial SIP revision and anticipates no adverse comments. A detailed rationale for the approval is set forth in the preamble to the direct final rule. If the EPA receives no adverse comments, the EPA will not take further action on this proposed rule.

If the EPA receives adverse comments, the EPA will withdraw the direct final rule and it will not take effect. The EPA will address all public comments in a subsequent final rule based on this proposed rule. The EPA will not institute a second comment period on this action. Any parties interested in commenting on this action should do so at this time. Please note that if we receive adverse comment on an amendment, paragraph, or section of this rule and if that provision may be severed from the remainder of the rule, the EPA may adopt as final those provisions of the rule that are not the subject of an adverse comment.

Dated: August 13, 2015.

Edward H. Chu,

Acting Regional Administrator, Region 10.

[FR Doc. 2015–21936 Filed 9–4–15; 8:45 am]

BILLING CODE 6560–50–P

FEDERAL COMMUNICATIONS COMMISSION

47 CFR Part 54

[WC Docket Nos. 11–42, 09–197 and 10–90; Report No. 3027]

Petitions for Reconsideration of Action in Rulemaking Proceeding

Correction

In proposed rule 2015–21763 appearing on page 53088 in the issue of Wednesday, September 2, 2015, make the following correction:

On page 53088, in the second column, in the sixth line, ''September 11, 2015'' should read ''September 28, 2015''.

[FR Doc. C1–2015–21763 Filed 9–4–15; 8:45 am]

BILLING CODE 1505–01–D

DEPARTMENT OF TRANSPORTATION

Surface Transportation Board

49 CFR Parts 1011, 1034, 1102, 1104, and 1115

[Docket No. EP 697]

Amtrak Emergency Routing Orders

AGENCY: Surface Transportation Board.

ACTION: Proposed rule, withdrawn.

SUMMARY: The Board is withdrawing the proposed rules and discontinuing the EP 697 rulemaking proceeding which proposed a formal process for the National Railroad Passenger Corporation (Amtrak) to seek emergency routing orders. Based on comments received, the Board will continue the practice of appointing an individual who can act immediately on behalf of the Board.

DATES: The proposed rule is withdrawn and the rulemaking proceeding is discontinued on September 8, 2015.

FOR FURTHER INFORMATION CONTACT: Gabriel Meyer, (202) 245–0150. Assistance for the hearing impaired is available through the Federal Information Relay Service (FIRS) at (800) 877–8339.

SUPPLEMENTARY INFORMATION: On January 6, 2011, the Board issued a Notice of Proposed Rulemaking (NPRM) seeking public comment on regulations concerning Amtrak.[1] The proposed regulations would provide a more formal process for Amtrak to seek emergency routing orders over the lines of other railroads and for the Board to issue such orders. Pursuant to 49 U.S.C. 24308(b), the Board has statutory authority to require rail carriers to provide facilities immediately when necessary for the movement of Amtrak trains when Amtrak cannot operate its trains via normal routings due to rail line closures or other emergencies.

The Board solicited comments and, on February 7, 2011, The Kansas City Southern Railway Company (KCSR), the Association of American Railroads (AAR), and Amtrak filed separate comments on the proposed rules. On February 22, 2011, KCSR and Amtrak filed separate replies to the comments. Amtrak expressed concern that, compared with the informal procedures that the Board has historically used, the proposed rules would make it more difficult for Amtrak to obtain emergency relief on an ''immediate'' basis. KCSR generally opposed the proposed rules, claiming that they allow unannounced access to a carrier's track without waiting for a reply from the affected carrier. AAR raised a similar point to KCSR, and suggested that, to provide greater participation by a host carrier, the Board issue a decision within two days following Amtrak's submission of an application.

Based on further consideration of these comments, we believe the proposed rules are not practical. Most importantly, the record reveals that the rules do not provide the prompt relief mandated by § 24308(b), which is necessary to handle emergencies that are happening in real-time. The comments thus indicate that the proposed rules, rather than serving the Board's goal of improving the process, would complicate and hinder it. We therefore will not adopt the formal process proposed in the NPRM and will continue the past practice of appointing a Board staff member who can order access immediately on behalf of the Board. Specifically, a staff member in the Office of Public Assistance, Governmental Affairs, and Compliance (OPAGAC) can respond to emergency rerouting requests via telephone in a timely manner and contact appropriate representatives of the involved carriers. We are simultaneously issuing a companion decision appointing the Director of OPAGAC, or in the Director's absence, a Deputy Director to act on behalf of the Board in such circumstances.[2]

These emergency routing orders allow for the continued operation of Amtrak and typically will not address compensation terms. If the parties cannot agree on such terms and conditions of access, they can subsequently petition the Board to set them. We expect parties to work together and with the Director or a Deputy Director of OPAGAC to reach a practical and efficient resolution of an access issue during an emergency situation.

This action will not significantly affect either the quality of the human environment or the conservation of energy resources.

Decided: August 31, 2015.

By the Board, Chairman Elliott, Vice Chairman Begeman, and Commissioner Miller.

Brendetta S. Jones,

Clearance Clerk.

[FR Doc. 2015–22543 Filed 9–4–15; 8:45 am]

BILLING CODE 4915–01–P

[1] The NPRM was published in the **Federal Register** on January 6, 2011 (76 FR 766).

[2] *Appointment of Agent to Require Emergency Routing of Amtrak Passenger Trains,* EP 697 (Sub-No. 1) (STB served Sept. 8, 2015).

Notices

Federal Register

Vol. 80, No. 173

Tuesday, September 8, 2015

This section of the FEDERAL REGISTER contains documents other than rules or proposed rules that are applicable to the public. Notices of hearings and investigations, committee meetings, agency decisions and rulings, delegations of authority, filing of petitions and applications and agency statements of organization and functions are examples of documents appearing in this section.

DEPARTMENT OF AGRICULTURE

Agricultural Marketing Service

[Document Number AMS–NOP–15–0037; NOP–15–11]

Notice of Meeting of the National Organic Standards Board

AGENCY: Agricultural Marketing Service, USDA.

ACTION: Notice of public meeting.

SUMMARY: In accordance with the Federal Advisory Committee Act, as amended, (5 U.S.C. App.), the Agricultural Marketing Service (AMS), Department of Agriculture, is announcing a meeting of the National Organic Standards Board (NOSB) to assist the Department in the development of standards for substances to be used in organic production and to advise the Secretary of Agriculture on any other aspects of the implementation of Organic Foods Production Act.

DATES: The Board will hold two webinars at which it will receive public comment: October 13 and October 20, from 1:00 p.m. to 4:00 p.m. Eastern Time. A face-to-face meeting will be held October 26–29, 2015, from approximately 9:00 a.m. to approximately 6:00 p.m. Eastern Time. Deadline to sign up for oral comment: midnight Eastern Time, 30 days after publication of this notice. Deadline to submit written comments: midnight Eastern Time, 30 days after publication of this notice.

ADDRESSES: The October 13 and 20 meetings will take place via webinar (access information will be available prior to the webinars). The October 26–29, 2015 meeting will take place at the Stoweflake Conference Center, 1746 Mountain Road Stowe, VT 05672, (802) 253–7355, *www.stoweflake.com.* Detailed information pertaining to the meetings, including instructions about providing written and oral comments can be found at *www.ams.usda.gov/NOSBMeetings*

FOR FURTHER INFORMATION CONTACT: Ms. Michelle Arsenault, Advisory Committee Specialist, National Organic Standards Board, USDA–AMS–NOP, 1400 Independence Ave. SW., Room 2642-So., Mail Stop 0268, Washington, DC 20250–0268; Phone: (202) 720–3252; Email: *nosb@ams.usda.gov.*

SUPPLEMENTARY INFORMATION: The NOSB makes recommendations to the Department of Agriculture about whether substances should be allowed or prohibited in organic production and/or handling, assists in the development of standards for organic production, and advises the Secretary on other aspects of the implementation of the Organic Foods Production Act (7 U.S.C. 6501–6522). The public meeting allows the NOSB to discuss and vote on proposed recommendations to the USDA, receive updates from the USDA National Organic Program (NOP) on issues pertaining to organic agriculture, and receive comments from the organic community. The meeting is open to the public. The meeting agenda, NOSB proposals and discussion documents, instructions for submitting and viewing public comments, and instructions for requesting time for oral comments will be available on the NOP Web site at *www.ams.usda.gov/NOSBMeetings.* Meeting topics will encompass a wide range of issues, including: substances petitioned for addition to or deletion from the National List of Allowed and Prohibited Substances (National List), substances on the National List that require NOSB review before their 2017 sunset dates, and guidance on organic policies. At this meeting, the NOSB will complete its review of substances that have a sunset date in 2017, fulfilling the NOSB's responsibilities described in the Organic Foods Production Act's sunset provision (section 2118(e)).

Public Comments:

Written comments:

Written public comments will be accepted on or before midnight Eastern Time, 30 days after publication of this notice via *www.regulations.gov.* Comments submitted after this date will be provided to the NOSB, but Board members may not have adequate time to consider those comments prior to making a recommendation. The NOP strongly prefers comments to be submitted electronically; however, written comments may also be submitted (*i.e.* postmarked) by the deadline, via mail to Ms. Michelle Arsenault listed under **FOR FURTHER INFORMATION CONTACT**.

Oral Comments:

The NOSB is providing the public multiple dates and opportunities to provide oral comments and will accommodate as many individuals and organizations as time permits. Persons or organizations wishing to make oral comments must pre-register by midnight Eastern Time, 30 days after publication of this notice, and can only register for one speaking slot: either during one of the two webinars, October 13 or 20, 2015, or at the face-to-face meeting October 26–29, 2015. Instructions for registering and participating in the webinar can be found at *www.ams.usda.gov/NOSBMeetings* or by contacting Michelle Arsenault listed under **FOR FURTHER INFORMATION CONTACT**.

Meeting Accommodations: The meeting hotel is ADA Compliant, and the USDA provides reasonable accommodation to individuals with disabilities where appropriate. If you need a reasonable accommodation to participate in this public meeting, please notify Michelle Arsenault listed under **FOR FURTHER INFORMATION CONTACT**. Determinations for reasonable accommodation will be made on a case-by-case basis.

Dated: August 28, 2015.

Rex A. Barnes,

Associate Administrator, Agricultural Marketing Service.

[FR Doc. 2015–21736 Filed 9–4–15; 8:45 am]

BILLING CODE 3410–02–P

DEPARTMENT OF AGRICULTURE

Office of the Secretary

[Docket No. FSIS–2011–0030]

Privacy Act of 1974; New System of Records

AGENCY: Food Safety and Inspection Service, USDA.

ACTION: Notice of proposed new system of records; request for comment.

SUMMARY: In accordance with the Privacy Act of 1974, as amended, the U.S. Department of Agriculture (USDA) proposes to establish a new system of

records titled USDA/FSIS–03 Food Safety and Inspection Service (FSIS) Consumer Complaint Monitoring System (CCMS) II.

The mission of FSIS is to protect public health by ensuring that meat, poultry, and processed egg products are safe, wholesome, and accurately labeled. Thus, the Agency must detect food safety vulnerabilities as early and as specifically as possible so that the potential for harm can be promptly prevented, reduced, or eliminated. The CCMS II helps FSIS to effectively identify potentially unsafe meat, poultry, or processed egg products regulated by FSIS by recording, sorting, analyzing, and tracking consumer complaints regarding products' potential adverse effects, and by tracking any subsequent analyses and investigations of those complaints.

DATES: *Effective Date:* October 8, 2015. If no comments are received, the proposal will become effective on above date. If comments are received, they will be considered and, where adopted, the document will be republished with changes.

ADDRESSES: You may submit comments, identified by docket number FSIS–2011–0030, by one of the following methods.

- *Federal e-Rulemaking Portal: http://www.regulations.gov.* Follow the instructions for submitting comments.
- *Mail:* Director, Applied Epidemiology Division, Office of Public Health Science, Food Safety and Inspection Service, 1400 Independence Avenue SW., Washington, DC 20250.

Fax: (202) 720–8213.

Instructions: All submissions received must include the agency name and docket number for this rulemaking. All comments received will be posted without change to *http://www.regulations.gov,* including any personal information provided.

- *Docket:* For access to the docket, go to *http://www.regulations.gov.*

FOR FURTHER INFORMATION CONTACT: For general questions, please contact Dr. Karen Becker, Director, Applied Epidemiology Staff, Office of Public Health Systems, Food Safety and Inspection Service, Department of Agriculture, Washington, DC 20024; telephone (202) 690–6045. For privacy questions, please contact Ravoyne Payton, Acting Chief Privacy Officer, Policy, E-Government and Fair Information Practices, Office of the Chief Information Officer, Department of Agriculture, Washington, DC 20250; telephone (202) 720–8755.

SUPPLEMENTARY INFORMATION: The Privacy Act of 1974, as amended (5 U.S.C. 552a), requires agencies to publish in the **Federal Register** a notice of new or revised systems of records maintained by the agency. A system of records contains information that is retrieved by an individual's name or other unique identifier. FSIS is proposing to establish a new Privacy Act system of records, entitled USDA/FSIS–03, FSIS Consumer Complaint Monitoring System II (CCMS II), a relational database that collects information, retrieved by name or a unique identifying number assigned to an individual, to assist FSIS with trace-back or trace-forward investigations and characterization of foodborne hazards. The primary goal of the CCMS II electronic database is to support and augment FSIS analysts in their ability to identify consumer health risks associated with regulated products. The CCMS II will assist FSIS to accomplish its safety mission by quickly and effectively identifying potentially unsafe meat, poultry, or processed egg products. More specifically, CCMS II helps FSIS to analyze, evaluate, and identify foodborne hazards in its regulated products; to assess the risk to human health; and to determine the appropriate response to known, emerging, or potential threats to the food supply or to the agriculture sector. Paper records printed from the electronic database are stored only in limited quantities and on rare occasions and are retrieved when needed as working copies. Such paper records are shredded upon termination of the need for a working copy. Information gathered and entered into CCMS II supports investigations that can involve trace back to sources of foodborne illness outbreaks and tracing hazardous product forward to identify distribution and disposition. Among other activities, CCMS II data and investigations may support complaint-related verification of hazard analysis and critical control points in producing establishments, analysis of school lunch product manufacturing specifications associated with an outbreak involving a National School Lunch Program product, and recall coordination for products identified as being adulterated or unwholesome. If a complaint involves an incident that is determined to be non-routine, alerts will be provided to management.

A complaint that is put into CCMS II can be initiated in any of the following ways: (1) Calls from consumers or their representatives, or from representatives of State or local health departments and Federal agencies, including USDA's Agricultural Marketing Service (AMS) and Food and Nutrition Service (FNS), (2) electronic hand-off from the USDA's Meat and Poultry Hotline system, and (3) web forms submitted by consumers. Trained analysts review the complaint information. Once reviewed, the case is entered into the system directly or indirectly via a transfer from the Meat and Poultry Hotline System.

Epidemiologists in the FSIS Office of Public Health Science (OPHS) analyze the information in CCMS II to determine necessary further analyses, investigation, or processing. OPHS leads the management and investigation of all cases entered into the system. Technical and scientific support is provided to other program areas, as necessary.

Personal information about individuals collected in CCMS II includes first and last name, home or work address, telephone number or email, and details of the complaint, which can include medical symptoms and medical treatment obtained. Specific information about food items eaten also is collected in CCMS II. A unique case number is assigned to each complaint and provided to the individual making the report and can be used in lieu of or in addition to the personal information noted above for retrieving system information.

Under the Federal Meat Inspection Act (21 U.S.C. 601 *et seq.*), the Poultry Product Inspection Act (21 U.S.C. 451 *et seq.*), and the Egg Products Inspection Act (21 U.S.C. 1031 *et seq.*), FSIS is authorized to inspect and regulate the production of meat, poultry, and egg products and to prevent the sale and movement in commerce of adulterated or misbranded articles in order to fulfill its food safety mission. In addition, the Secretary of Agriculture is authorized to give high priority to enhancing the ability of FSIS ''. . . to ensure the safety and wholesomeness of meat and poultry products;'' to strengthen the ability of FSIS ''to collaborate with relevant agencies within the Department of Agriculture and with other entities in the Federal Government, the States, and Indian tribes . . . through the sharing of information and technology;'' and expanding the capacity of FSIS ''to protect against the threat of bioterrorism'' (21 U.S.C. 679c (a)(1)(3) and (4)).

In summary, all of these authorities allow FSIS to perform the functions of this system: To gather and maintain information related to foodborne hazards that will support investigations aimed to trace back foodborne illness outbreaks to its sources and to identify potentially unsafe meat, poultry, or processed egg products from entering commerce; to collaborate with federal,

State, local, and tribal public health partners in identifying potentially unsafe meat or poultry products; and to assess probable threats or risks to the food supply and devise an adequate response, to ultimately achieve its food safety mission.

Background

CCMS II system programs and use of resources comply with procedures for avoiding waste, fraud, abuse, or mismanagement; for obtaining, reporting, and using reliable and timely information for decision-making; and for appropriately identifying and managing program risks. To enable management and audit oversight, CCMS II includes management controls and performance measures for supported activities to ensure that decision-making is accurate, timely, complete, and effective.

There are no Privacy Act exemptions being made for this application. Consistent with USDA's public health mission, information stored in CCMS II may be shared with other USDA components, as well as with appropriate Federal, State, local, tribal, foreign, or international government agencies. This sharing will take place only after USDA determines that the receiving component or agency has a need to know the information to carry out national security, law enforcement, immigration, intelligence, or other functions consistent with the routine uses set forth in this system of records notice.

In accordance with 5 U.S.C. 552a(r), as implemented by Office of Management and Budget Circular A–130, FSIS has provided a report of this new system of records to: The Chairman, Committee on Homeland Security and Governmental Affairs, United States Senate; the Ranking Member, Committee on Homeland Security and Governmental Affairs, United States Senate; the Chairman, Committee on Oversight and Government Reform, House of Representatives; the Ranking Member, Committee on Oversight and Governmental Reform, House of Representatives; and the Administrator, Office of Information and Regulatory Affairs, Office of Management and Budget.

Alfred V. Almanza,
Acting Administrator.

USDA/FSIS–03

SYSTEM OF RECORDS NAME:

USDA/FSIS–03, FSIS Consumer Complaint Monitoring System (CCMS) II.

SECURITY CLASSIFICATION:

Unclassified.

SYSTEM LOCATION:

Records are maintained at the U.S. Department of Agriculture, 1400 Independence Avenue SW., Washington, DC 20250, and at USDA's National Information Technology Center facility at 8930 Ward Parkway, Kansas City, Missouri 64114.

CATEGORIES OF INDIVIDUALS COVERED BY THE SYSTEM:

Federal employees and private citizens involved in an FSIS investigation, including individuals who submit complaints; those who work in the food industry under FSIS' inspection, such as private citizens who operate or work at establishments; those who work for operations that may be subject to FSIS surveillance or enforcement, such as private citizens employed at retail operations that grind meat or poultry; members of volunteer organizations who prepare or have prepared food; and State, tribal, and local government employees responsible for food safety or public health.

CATEGORIES OF RECORDS IN THE SYSTEM:

This system contains information pertaining to investigations of consumer complaints to aid in identifying and tracking potential public health crises. This information includes personal information, such as first and last names, home or work address, telephone number or email, and details concerning medical symptoms and care and cause of complaint. Each record is associated with an assigned case code to ease retrieval.

AUTHORITY FOR MAINTENANCE OF THE SYSTEM:

- Poultry Products Inspection Act (21 U.S.C. 451 *et seq.*);
- Federal Meat Inspection Act (21 U.S.C. 601 *et seq.*); and
- Egg Products Inspection Act (21 U.S.C 1031 *et seq.*).

RESPONSIBLE AGENCY OFFICIAL FOR SYSTEM:

Dr. David Goldman, Assistant Administrator, Office of Public Health Science (OPHS), Food Safety and Inspection Service(FSIS), U.S. Department of Agriculture, 1400 Independence Avenue SW., Washington, DC 20250, Rm. 341–E JLW Bldg. Telephone (202) 720–2644.

Or Dr. Karen Becker, Director Applied Epidemiology Division, Office of Public Health Science, Food Safety and Inspection Service, U.S. Department of Agriculture, 1400 Independence Avenue SW., Washington, DC 20250. Telephone (202) 690–6045; Fax:(202) 720–8213.

PURPOSES:

The records provided by and about individuals in this system are used by FSIS to sort, evaluate, and investigate possible adverse effects from FSIS-regulated products. The information also supports trace back to the source of foodborne illness outbreaks and tracing hazardous products forward to identify distribution and disposition. CCMS II data and associated processes help FSIS to analyze, evaluate, and identify foodborne hazards in products regulated by the Agency; to assess the risk to human health; and to determine the appropriate response to known, emerging, or potential threats to the food supply or to the agriculture sector.

ROUTINE USES OF RECORDS MAINTAINED IN THE SYSTEM, INCLUDING CATEGORIES OF USERS AND THE PURPOSES OF SUCH USES:

In addition to those disclosures generally permitted under 5 U.S.C. 552a(b) of the Privacy Act of 1974, all or a portion of the records or information contained in this system may be disclosed outside USDA as a routine use pursuant to 5 U.S.C. 552a(b)(3) as follows:

1. To the U.S. Department of Justice (DOJ) (including United States Attorney Offices) or other Federal agency conducting litigation, or in proceedings before any court, adjudicative or administrative body, when it is necessary for the litigation, and one of the following is a party to the litigation or has an interest in the litigation:

a. USDA or any component thereof;

b. any employee of USDA in his/her official capacity;

c. any employee of USDA in his/her individual capacity where DOJ or USDA has agreed to represent the employee; or

d. the United States or any agency thereof, and USDA determines that the records are both relevant and necessary to the litigation and the use of such records is compatible with the purpose for which USDA collected the records.

2. To a congressional office from the record of an individual in response to an inquiry from that congressional office made at the written request of the individual to whom the record pertains.

3. To the National Archives and Records Administration (NARA) or other Federal government agencies pursuant to records management inspections being conducted under the authority of 44 U.S.C. 2904 and 2906.

4. To an agency, organization, or individual for the purpose of performing audit or oversight operations as authorized by law, but only such information as is necessary and relevant to such audit or oversight function. This would include, but not be limited to the

Comptroller General or any of his authorized representatives in the course of the performance of the duties of the Government Accountability Office, or USDA's Office of the Inspector General or any authorized representatives of that office.

5. To appropriate agencies, entities, and persons when:

a. USDA or FSIS suspects or has confirmed that the security or confidentiality of information in the system of records has been compromised;

b. USDA has determined that, as a result of the suspected or confirmed compromise, there is a risk of harm to economic or property interests, identity theft or fraud, or harm to the security or integrity of this system or other systems or programs (whether maintained by USDA or another agency or entity), or harm to the individual or individuals that rely upon the compromised information; and

c. The disclosure made to such agencies, entities, and persons is reasonably necessary to assist in connection with USDA's efforts to respond to the suspected or confirmed compromise and prevent, minimize, or remedy such harm.

6. To contractors and their agents, grantees, experts, consultants, and others performing or working on a contract, service, grant, cooperative agreement, or other assignment for USDA, when necessary to accomplish an agency function related to this system of records. Individuals who provided information under this routine use are subject to the same Privacy Act requirements and limitations on disclosure as are applicable to USDA officers and employees.

7. To an appropriate Federal, State, tribal, local, international, or foreign law enforcement agency or other appropriate authority charged with investigating or prosecuting a violation or enforcing or implementing a law, rule, regulation, or order, where a record, either on its face or in conjunction with other information, indicates a violation or potential violation of law, which includes criminal, civil, or regulatory violations and such disclosure is proper and consistent with the official duties of the person making the disclosure.

8. To an appropriate Federal, State, tribal, local, international, or foreign law enforcement agency or appropriate authority responsible for protecting public health, preventing or monitoring disease or illness outbreaks, or ensuring the safety of the food supply. This includes the Department of Health and Human Services and its agencies, including the Centers for Disease Control and Prevention and the Food and Drug Administration, other Federal agencies, and State, tribal, and local health departments. Certain complaint-related information may be shared with the producing establishment for purposes of investigating the complaints. Except as stated, disclosure is made pursuant to requests under the Freedom of Information Act (FOIA).

DISCLOSURE TO CONSUMER REPORTING AGENCIES:

None

POLICIES AND PRACTICES FOR STORING, RETRIEVING, ACCESSING, RETAINING, AND DISPOSING OF RECORDS IN THE SYSTEM:

STORAGE:

Records in this system are stored electronically in a dedicated virtual server or on paper in secure facilities in a locked drawer behind a locked door within USDA facilities. Electronically stored records, including backup records maintained on their own dedicated virtual server in a separate location, are stored on magnetic disc, tape, digital media, and CD–ROM. (Paper records are printed from electronic storage only in limited quantities and on rare occasions when needed as working copies. Such paper records are kept in secure facilities in a locked drawer behind a locked door within USDA facilities, and immediately are shredded upon termination of the need for a working copy.) Security guards safeguard the buildings where the electronic and the working copies of records reside.

RETRIEVABILITY:

Retrieval is generally performed using the case code (a sequentially assigned, system-generated code created at the time of initial contact) or other database fields, such as establishment number or type of complaint. A name can also be used to retrieve individual records; however, using the case code or other database fields reduces the need for retrieval by information that could identify an individual.

SAFEGUARDS:

Records in this system are safeguarded in accordance with applicable rules and policies, including all applicable USDA automated systems security and access policies. This includes protection behind firewalls, network protection against intrusion, and vulnerability scanning and protection. Only users with a business need are allowed access through the use of an encrypted password. Role-based access controls are used to restrict access to CCMS II, which is accessible via the FSIS Intranet. Furthermore, multiple levels of access exist, based on the user's system role and job function. Each time users sign in to the application, the login credentials are checked against authorized system user role memberships to ensure the user's access privileges are restricted to assigned level-of-access roles. User activity is also monitored, logged, and audited. Additionally, all users are required to undergo USDA-approved computer security awareness training prior to access and must complete computer security training yearly in order to retain access. An access agreement describes prohibited activities, such as browsing.

RETENTION AND DISPOSAL:

Records will be destroyed or maintained in accordance with the USDA's published records disposition schedules, as approved by NARA. A backup of the Master File is created at the end of the calendar year, and backup records are maintained in accordance with General Records Schedule Authority N1–462–07–01, Item 2. System inputs are maintained in accordance with General Records Schedule Authority GRS 20, Item 2(a)(4), while system outputs (reports) are maintained in accordance with General Records Schedule Authority GRS 20, Item 16.

SYSTEM MANAGER AND ADDRESS:

Dr. Karen Becker, Director, Applied Epidemiology Staff, Office of Public Health Science, Food Safety and Inspection Service, 355 E Street SW. PPIII, 9th Floor Office 9–232, Washington, DC 20024. Telephone (202) 690–6045.

NOTIFICATION PROCEDURE:

An individual may request information regarding this system of records, or information as to whether this system contains records pertaining to such individual from the System Manager listed above. Individuals seeking notification of and access to any record contained in this system of records, or seeking to contest its content, may submit a request in writing to the Headquarters or FSIS Freedom of Information Act (FOIA) Officer, whose contact information can be found at *http://www.da.usda.gov/foia.htm* under ''Contacts.'' If an individual believes more than one component maintains Privacy Act records concerning him or her, the individual may submit the request to the Chief FOIA Officer, U.S. Department of Agriculture, 1400 Independence Avenue SW., Washington, DC 20250.

When seeking records about yourself from this system of records or any other USDA system of records, your request must conform with the Privacy Act regulations set forth in 7 CFR part 1. You must first verify your identity, meaning that you must provide your full name, current address, and date and place of birth. You must sign your request, and your signature must either be notarized or submitted under 28 U.S.C. 1746, a law that permits statements to be made under penalty of perjury as a substitute for notarization. While no specific form is required, you may obtain forms for this purpose from the Chief FOIA Officer, U.S. Department of Agriculture, 1400 Independence Avenue SW., Washington, DC 20250. In addition, you should provide the following:

- An explanation of why you believe USDA would have information on you,
- Which components of USDA you believe may have the information about you,
- When you believe the records would have been created,
- Any other information that will help the FOIA staff determine which USDA component agency may have responsive records,
- If your request is seeking records pertaining to another living individual, you must include a statement from that individual certifying his/her agreement for you to access his/her records.

Without this bulleted information, the component(s) may not be able to conduct an effective search, and your request may be denied due to lack of specificity.

RECORDS ACCESS PROCEDURES:

See ''Notification Procedure'' above.

CONTESTING RECORDS PROCEDURES:

See ''Notification Procedure'' above.

RECORD SOURCE CATEGORIES:

Information generally is obtained directly from the individual who is the subject of the records, or from someone acting on their behalf, such as Federal, State and Local health agencies, relatives, or a friend of the consumer.

EXEMPTIONS CLAIMED FOR THE SYSTEM:

None

United States Department of Agriculture

Food Safety and Inspection Service

Consumer Complaint Monitoring System (CCMS) II

FSIS–2011–0030

New System of Records—Narrative Statement

The mission of the Food Safety and Inspection Service (FSIS) is to protect public health by ensuring that meat, poultry, and processed egg products are safe, wholesome, and accurately labeled. Natural events, accidents, or intentional acts can put the safety of food and the food supply chain at risk, and by doing so, put the health and welfare of consumers at risk. FSIS developed the Consumer Complaint Monitoring System (CCMS II) to help Agency personnel quickly and effectively identify potentially unsafe meat, poultry, or processed egg products. CCMS II is an electronic database accessed from FSIS' Intranet and is used to record, sort, evaluate, and track complaints about possible adverse effects from meat, poultry, or processed egg products regulated by FSIS. CCMS II is also used to track subsequent analysis and investigations of these complaints.

Under the Federal Meat Inspection Act (21 U.S.C. 601, *et seq.*), the Poultry Product Inspection Act (21 U.S.C. 451, *et seq.*), and the Egg Products Inspection Act (21 U.S.C. 1031, *et seq.*), Congress has provided for the inspection and regulated processing and distribution of meat and meat products, poultry, and egg products to prevent the sale and movement in commerce of articles that are adulterated or misbranded. Specifically, 21 U.S.C. 451, 602, and 1031 note that the health and welfare of consumers are to be protected by assuring that meat and meat food products are wholesome and that regulation by the Secretary of Agriculture and cooperation by the States and other jurisdictions are appropriate to protect the health and welfare of consumers.

Further, under 21 U.S.C. 679c(a)(1) and (3), the Secretary is authorized to give high priority to enhancing the ability of FSIS ''. . . to ensure the safety and wholesomeness of meat and poultry products'' and to ''strengthen the ability of [FSIS] to collaborate with relevant agencies within the Department of Agriculture and with other entities in the Federal Government, the States, and Indian tribes . . . through the sharing of information and technology.'' CCMS II helps to identify products in commerce that are potentially adulterated and enables FSIS to determine whether reported products are safe and wholesome. In addition, the system allows the Agency to collaborate with federal, State, local, and tribal public health partners in identifying potentially unsafe meat or poultry products—and helps the Agency to protect the consuming public from further harm.

A complaint can be initiated by calls from consumers or their representatives, by representatives of State or local health departments and Federal agencies, including USDA's Agricultural Marketing Service and Food and Nutrition Service, or via electronic hand-off from USDA's Meat and Poultry Hotline system and through web forms submitted by consumers. The information from these complaints, collected in CCMS II, is analyzed, evaluated, and classified as needing further action by trained analysts in FSIS' Office of Public Health Science (OPHS). These and other analysts identify the organization that will perform any subsequent action, provide ongoing updates, coordinate communication with other USDA agencies as needed, and alert management in the event of a non-routine incident. OPHS will also determine and coordinate any needed laboratory analysis and provide technical and scientific support to other program areas. Until the complaint is resolved, any action taken is updated in CCMS II. CCMS II data can include certain information about individuals, such as first and last names, home or work address, telephone number or email, food product consumed, medical symptoms experienced, and medical care received. Some of this information can be and is used to retrieve records, such as first and last name, but by design and in general practice, a system-generated case code is used for retrieval. The case code is sequentially assigned at the time of the initial contact, and is provided to the submitter of the complaint. Other database fields, such as establishment number or type of complaint, can also be used for retrieval.

The data within CCMS II is specifically used for the reasons the information was obtained: to help determine the safety of specific food products consumed by individuals who reported problems with the food items. Information from CCMS II may be shared in a controlled manner within FSIS and, as needed, with other public health partners, to determine whether there is a potential problem with the product, to help identify the origin of the product, to trace forward the product's distribution or disposition, to follow-up with the individual who reported the problem, to ascertain whether others experienced similar problems with the same product, or for other reasons that derive directly from the reason the information was originally collected. There are other routine uses of CCMS II data permitted under U.S.C. 552a(b)(3), as contained in the **Federal Register** Notice and summarized here:

To the Department of Justice for litigation purposes; to National Archives and Records Administration for records management; to a Congressional Office in response to an inquiry from the relevant constituent; to an appropriate authority for audit purposes; to an appropriate authority in response to a threat to information security or confidentiality; to an appropriate law enforcement authority in response to investigations, prosecutions, or enforcement actions; to contractors and agents performing a function on behalf of the agency relating to the collection of information to support surveillance, investigations, and facilitation of rapid detection and response to food borne hazards; to appropriate authorities responsible for public health/monitoring illness outbreaks/ensuring safety of the food supply because the data supports public

health officials in their ability to identify public health hazards and mitigate their impact through communication and information sharing among public health partners; and to producing establishments in connection with the Agency's investigation of complaint-related information.

CCMS II data and investigations also support other activities, including complaint-related verification of Hazard Analysis and Critical Control Points in producing establishments, analysis of school lunch product manufacturing specifications, and recall coordination for product(s) identified as adulterated or unwholesome.

Safeguards/Security Provided for This System

FSIS has taken significant actions to safeguard the identifiable information about an individual in CCMS II and to control access to the system itself. Access to CCMS II is restricted to trained, authorized FSIS employees and to a limited number of users representing FSIS' public health partners in the Department of Health and Human Services. Authorized users are assigned level-of-access roles based on their job functions. The level of access for the user restricts the data that may be seen and the degree to which data may be modified by the user. Firewalls and other security controls further prevent unauthorized access. As a result, the potential effect of CCMS II on an individual's privacy is minimal.

In addition to those disclosures generally permitted under 5 U.S.C. 552a(b) of the Privacy Act, records maintained in the system may be disclosed outside USDA for eight routine uses. These routine uses may be described as functional and housekeeping uses.

The records are protected by the confidentiality requirements of USDA's Office of the Chief Information Officer Cyber Security Manuals and the provisions of the Privacy Act. Only authorized USDA employees and contractors will have access to the records in this system, and this access will be on a need-to-know basis. Role-based access controls are used to restrict access to CCMS II, which is accessible via the FSIS Intranet.

The system has been categorized as a Moderate impact system as identified in Federal Information Processing Standard (FIPS) 199. The security controls implemented within the system will correspond with those published in the National Institute of Standards and Technology Special Publication 800–53, Recommended Security Controls for Federal Information Technology Systems (Revision1) for a Moderate impact system. Users are granted system access only upon successful completion of security training and must successfully complete security training each year to retain access. Each user is supplied with a unique and strong user-id and password. The user roles are restrictive and based on the principle of least privilege allowing for adequate performance of job functions and access to information based on a need to know.

Where appropriate, the system also will adhere to the security controls identified in the Federal Information Security Control Audit Manual (FISCAM). The mandatory requirements of FIPS 199 and FIPS 200 support the Federal Information Security Management Act and FISCAM supports the mandated Office of Management and Budget Circular A–123, Management of Internal Controls.

Moreover, system managers and users observe and adhere to specific USDA security requirements as set forth in the USDA Cyber Security Manuals, including but not limited to USDA Departmental Manual (DM) 3545–000, Personnel Security, and DM 3510–001, Physical Security Standards for Information Technology Restricted Space.

[FR Doc. 2015–22085 Filed 9–4–15; 8:45 am]

BILLING CODE 3410–DM–P

DEPARTMENT OF AGRICULTURE

Office of the Chief Economist; Public Comment Period for Climate Change, Global Food Security, and the U.S. Food System Assessment Report

AGENCY: Office of the Chief Economist, U.S. Department of Agriculture.

ACTION: Request for Public Comment on Climate Change, Global Food Security, and the U.S. Food System Assessment Report.

SUMMARY: The U.S. Department of Agriculture (USDA) has led the development of an interagency assessment report entitled ''Climate Change, Global Food Security, and the U.S. Food System.'' The report has been developed to support the National Climate Assessment of the U.S. Global Change Research Program, and is called for under the President's Climate Action Plan. USDA is requesting input from the public. This request is being published in the **Federal Register** for a 30-day public comment period. Public comments will be considered during the preparation of the final report. The final report will be published on USDA's Web site when it becomes available. Comments from the public will be accepted electronically via *http://www.globalchange.gov/notices.* Comments may be submitted only online and via this address; instructions for doing this are on the Web site.

DATES: Comments must be received by 11:59 p.m. Eastern Time on October 8, 2015 will be considered.

ADDRESSES: Comments from the public will be accepted electronically via *http://www.globalchange.gov/notices.* Comments may be submitted only online and via this address; instructions for doing this are on the Web site.

FOR FURTHER INFORMATION CONTACT: William Hohenstein, Director, USDA Climate Change Program Office, telephone: 202–720–9978, Email: *whohenst@oce.usda.gov.*

SUPPLEMENTARY INFORMATION: The public comment draft can be found online at *www.globalchange.gov/notices.* Only comments received through the online comment system (*www.globalchange.gov/notices*) will be considered.

All comments received will be considered by the report's authors and will become part of the public record once the final report is issued. However, until the report is finalized and released to the public, commenters' identities will not be shared with the authors. When the report is released in final form to the public, the comments, in association with the commenter's name, will be made available upon request. No additional information a commenter submits as part of the registration process (such as an email address) will be disclosed publicly.

The Department of Agriculture will publish a notice informing the public of the final report when it is issued.

Robert Johansson,

Chief Economist.

[FR Doc. 2015–22668 Filed 9–4–15; 8:45 am]

BILLING CODE 3410–38–P

DEPARTMENT OF AGRICULTURE

Forest Service

Rogue and Umpqua Resource Advisory Committee

AGENCY: Forest Service, USDA.

ACTION: Notice of meeting.

SUMMARY: The Rogue and Umpqua Resource Advisory Committee (RAC) will meet in Roseburg, Oregon. The committee is authorized under the Secure Rural Schools and Community Self-Determination Act (the Act) and operates in compliance with the Federal Advisory Committee Act. The purpose of the committee is to improve collaborative relationships and to provide advice and recommendations to the Forest Service concerning projects and funding consistent with Title II of the Act. Additional RAC information, including the meeting agenda and the meeting summary/minutes can be found at the following Web site: *http://tinyurl.com/qjkrxps.*

DATES: The meeting will be held October 14–15, 2015, at 9:30 a.m.–4 p.m.

All RAC meetings are subject to cancellation. For status of meeting prior to attendance, please contact the person listed under **FOR FURTHER INFORMATION CONTACT.**

ADDRESSES: The meeting will be held at Umpqua National Forest Supervisor's Office, 2900 NW Stewart Parkway, Roseburg, Oregon.

Written comments may be submitted as described under **SUPPLEMENTARY INFORMATION**. All comments, including names and addresses when provided, are placed in the record and are available for public inspection and copying. The public may inspect comments received at Umpqua National Forest Supervisor's Office.

FOR FURTHER INFORMATION CONTACT: Cheryl Caplan, RAC Coordinator, by phone at 541–957–3270 or via email at *ccaplan@fs.fed.us.*

Individuals who use telecommunication devices for the deaf (TDD) may call the Federal Information Relay Service (FIRS) at 1–800–877–8339 between 8:00 a.m. and 8:00 p.m., Eastern Standard Time, Monday through Friday.

SUPPLEMENTARY INFORMATION: The purpose of the meeting is to:

1. Review projects proposals; and

2. Make project recommendations for Title II funding.

The meeting is open to the public. The agenda will include time for people to make oral statements of three minutes or less. Individuals wishing to make an oral statement should request in writing by October 13, 2015, to be scheduled on the agenda. Anyone who would like to bring related matters to the attention of the committee may file written statements with the committee staff before or after the meeting. Written comments and requests for time to make oral comments must be sent to Cheryl Caplan, RAC Coordinator, Umpqua National Forest Supervisor's Office, 2900 NW Stewart Parkway, Roseburg, Oregon 97471; by email to *ccaplan@fs.fed.us,* or via facsimile to 541–957–3495.

Meeting Accommodations: If you are a person requiring reasonable accommodation, please make requests in advance for sign language interpreting, assistive listening devices or other reasonable accommodation for access to the facility or proceedings by contacting the person listed in the section titled **FOR FURTHER INFORMATION CONTACT**. All reasonable accommodation requests are managed on a case by case basis.

Dated: September 1, 2015.

Steven T. Marchi,

Acting Umpqua Forest Supervisor.

[FR Doc. 2015–22527 Filed 9–4–15; 8:45 am]

BILLING CODE 3411–15–P

DEPARTMENT OF AGRICULTURE

Rural Business-Cooperative Service

Inviting Applications for the Delta Health Care Services Grant Program

AGENCY: Rural Business-Cooperative Service, USDA.

ACTION: Notice.

SUMMARY: This Notice announces that the Rural Business-Cooperative Service (Agency) is accepting fiscal year (FY) 2015 applications for the Delta Health Care Services Grant (DHCS) Program as authorized by the Consolidated and Further Continuing Appropriations Act of 2015 (Pub.L. 113–235). Approximately $5 million is available to be competitively awarded. The purpose of this program is to provide financial assistance to address the continued unmet health needs in the Delta Region through cooperation among health care professionals, institutions of higher education, research institutions and economic development entities in the Delta Region. The Agency is encouraging applications that grants to projects based in or serving census tracts with poverty rates greater than or equal to 20 percent. This emphasis will support Rural Development's (RD) mission of improving the quality of life for Rural Americans and its commitment to directing resources to those who most need them.

DATES: You must submit completed applications for grants according to the following deadlines:

- Paper copies must be postmarked and mailed, shipped, or sent overnight no later than December 7, 2015.
- Electronic copies must be received by December 2, 2015. Late applications are not eligible for funding under this Notice and will not be evaluated.

ADDRESSES: You should contact your USDA Rural Development State Office (State Office) if you have questions about eligibility or submission requirements. You are encouraged to contact your State Office well in advance of the application deadline to discuss your project and to ask any questions regarding the application process. A list of State Office contacts can be found at *http://www.rd.usda.gov/contact-us/state-offices.*

A supplementary application guide has also been created for your assistance. You may obtain application guides and materials for this Notice in the following ways:

- Through the Internet at the RBS Cooperative Programs Web site: *http://www.rd.usda.gov/programs-services/delta-health-care-services-grants*
- By requesting application guides and materials from your local State Office. A list of State Office contacts can be found at *http://www.rd.usda.gov/contact-us/state-offices.*

Alabama

USDA Rural Development State Office, Sterling Centre, Suite 601, 4121 Carmichael Road, Suite 601, Montgomery, AL 36106–3683, (334) 279–3400/TDD (334) 279–3495.

Arkansas

USDA Rural Development State Office, 700 West Capitol Avenue, Room 3416, Little Rock, AR 72201–3225, (501) 301–3200/TDD (501) 301–3279.

Illinois

USDA Rural Development State Office, 2118 West Park Court, Suite A, Champaign, IL 61821, (217) 403–6200/TDD (217) 403–6240.

Kentucky

USDA Rural Development State Office, 771 Corporate Drive, Suite 200, Lexington, KY 40503, (859) 224–7435/TDD (859) 224–7422.

Louisiana

USDA Rural Development State Office, 3727 Government Street, Alexandria, LA 71302, (318) 473–7960/TDD (318) 473–7655.

Mississippi

USDA Rural Development State Office, Federal Building, Suite 831, 100 West Capitol Street, Jackson, MS 39269, (601) 965–5457/TDD (601) 965–5850.

Missouri

USDA Rural Development State Office, 601 Business Loop 70 West, Parkade Center, Suite 235, Columbia, MO 65203, (573) 876–9321/TDD (573) 876–9480.

Tennessee

USDA Rural Development State Office, 3322 West End Avenue, Suite 300, Nashville, TN 37203–1084, (615) 783–1321.

You must submit either:

- A complete paper application to the State Office located in the State where the project will primarily take place, *http://www.rd.usda.gov/contact-us/state-offices* (see list above), or
- A complete electronic grant application at *http://www.grants.gov/* (Grants.gov). Please review the Grants.gov Web site at *http://grants.gov/applicants/organization_registration.jsp,* for instructions on the process of registering your organization as soon as possible to ensure you are able to meet the application deadline.

FOR FURTHER INFORMATION CONTACT: Grants Division, Cooperative Programs, Rural Business-Cooperative Programs, 1400 Independence Ave. SW., STOP 3253, Washington, DC 20250–3253; or call (202) 690–1376.

SUPPLEMENTARY INFORMATION:

Overview

Federal Agency: USDA Rural Business-Cooperative Service (RBS).

Funding Opportunity Title: Delta Health Care Services Grant Program.

Announcement Type: Initial funding announcement.

Catalog of Federal Domestic Assistance (CFDA) Number: 10.874.

Dates: You must submit your complete application by December 7, 2015 or it will not be considered for funding. Electronic copies must be received by *www.grants.gov* no later than midnight Eastern time December 2, 2015 or it will not be considered for funding.

Executive Order (EO) 13175 Consultation and Coordination With Indian Tribal Governments

This Executive Order imposes requirements on RD in the development of regulatory policies that have tribal implications or preempt tribal laws. RD has determined that this Notice does not have a substantial direct effect on one or more Indian tribe(s) or on either the relationship or the distribution of powers and responsibilities between the Federal Government and the Indian tribes. Thus, this Notice is not subject to the requirements of Executive Order 13175. Tribal Consultation inquiries and comments should be directed to RD's Native American Coordinator at *aian@wdc.usda.gov* or (720) 544–2911.

Paperwork Reduction Act

The Paperwork Reduction Act requires Federal agencies to seek and obtain Office of Management and Budget (OMB) approval before undertaking a collection of information directed to ten or more persons. In accordance with the Paperwork Reduction Act of 1995 (44 U.S.C. Chapter 35), the Agency conducted an analysis to determine the number of applications the Agency estimates that it will receive under the Delta Health Care Services Grant Program. It was determined that the estimated number of applications was fewer than nine and in accordance with 5 CFR 1320, thus no OMB approval is necessary at this time.

A. Program Description

This Notice announces the availability of funds for the DHCS grant program, which is authorized under Section 379G of the Consolidated Farm and Rural Development Act (7 U.S.C. 2008u). The primary objective of the program is to provide financial assistance to address the continued unmet health needs in the Delta Region through cooperation among health care professionals, institutions of higher education, research institutions, and other individuals and entities in the Delta Region. Grants are awarded on a competitive basis. The maximum award amount per grant is $500,000.

Definitions

The terms and conditions provided in this Notice are applicable to this Notice only. In addition, the term ''you'' referenced throughout this Notice should be understood to mean the applicant and the terms ''we,'' ''us,'' and ''our'' should be understood to mean Rural Business-Cooperative Services, Rural Development, USDA.

Academic Health and Research Institute means one of the following:

- A combination of a medical school, one or more other health profession schools or educational training programs (such as allied health, dentistry, graduate studies, nursing, pharmacy, public health, veterinary medicine), and one or more owned or affiliated teaching hospitals or health systems; or
- A health care nonprofit organization or health system, including nonprofit medical and surgical hospitals, that conduct health related research exclusively for scientific or educational purposes.

Conflict of Interest means a situation in which a person or entity has competing personal, professional, or financial interests that make it difficult for the person or business to act impartially. Regarding use of both grant and Federal procurement standards prohibit transactions that involve a real or apparent conflict of interest for owners, employees, officers, agents, or their immediate family members having a financial or other interest in the outcome of the project; or that restrict open and free competition for unrestrained trade. Specifically, project funds may not be used for services or goods going to, or coming from, a person or entity with a real or apparent conflict of interest, including, but not limited to, owner(s) and their immediate family members. An example of conflict of interest occurs when the consortium member's employees, board of directors, or the immediate family of either, have the appearance of a professional or personal financial interest in the recipients receiving the benefits or services of the grant.

Consortium means a group of three or more entities that are regional Institutions of Higher Education, Academic Health and Research Institutes, and/or Economic Development Entities located in the Delta Region that have at least one year of prior experience in addressing the health care issues in the region. At least one of the consortium members must be legally organized as an incorporated organization or other legal entity and have legal authority to contract with the Federal government.

Delta Region means the 252 counties and parishes within the states of Alabama, Arkansas, Illinois, Kentucky, Louisiana, Mississippi, Missouri, and Tennessee that are served by the Delta Regional Authority. (The Delta Region may be adjusted by future Federal statute.) To view the areas identified within the Delta Region visit *http://dra.gov/about-dra/dra-states.*

Economic Development Entity means any public or non-profit organization whose primary mission is to stimulate local and regional economies within the Delta Region by increasing employment opportunities and duration of employment, expanding or retaining existing employers, increasing labor rates or wage levels, reducing outmigration, and/or creating gains in other economic development-related variables such as land values. These activities shall primarily benefit low- and moderate-income individuals in the Delta Region.

Health System means the complete network of agencies, facilities, and all providers of health care to meet the health needs of a specific geographical area or target populations.

Institution of Higher Education means either a postsecondary (post-high school) educational institution that awards a bachelor's degree or provides not less than a 2-year program that is acceptable for full credit toward such a degree, or a postsecondary vocational institution that provides a program of training to prepare students for gainful employment in a recognized occupation.

Nonprofit Organization means any organization or institution, including an accredited institution of higher education, no part of the net earnings of which may inure, to the benefit of any private shareholder or individual.

Project Funds means grant funds requested plus any other contributions to the proposed project.

Rural and rural area means any area of a State:

- Not in a city or town that has a population of more than 50,000 inhabitants, according to the latest

decennial census of the United States; and

• The contiguous and adjacent urbanized area,

• Urbanized areas that are rural in character as defined by 7 U.S.C. 1991 (a)(13), as amended by Section 6018 of the Food, Conservation, and Energy Act of 2008, Public Law 110–246 (June 18, 2008).

• For the purposes of this definition, cities and towns are incorporated population centers with definite boundaries, local self-government, and legal powers set forth in a charter granted by the State.

State means each of the 50 states, the Commonwealth of Puerto Rico, the Virgin Islands of the United States, Guam, American Samoa, the Commonwealth of the Northern Mariana Islands, and, as may be determined by the Secretary to be feasible, appropriate and lawful, the Federated States of Micronesia, the Republic of the Marshall Islands and the Republic of Palau.

B. Federal Award Information

Type of Award: Grant
Total Funding for DHCS: $5,312,610.00
Maximum DHCS Award: $500,000
Minimum DHCS Award: $50,000
Project Period: Up to 24 months
Anticipated Award Date: March 1, 2016

C. Eligibility Information

Applicants must meet all of the following eligibility requirements. Your application will not be considered for funding if it does not provide sufficient information to determine eligibility or is missing required elements. Applicants that fail to submit the required elements by the application deadline will be deemed ineligible and will not be evaluated further. Information submitted after the application deadline will not be accepted.

1. Eligible Applicants

Grants funded through DHCS may be made to a Consortium as defined in Paragraph A of this Notice. Consortiums are eligible to receive funding through this Notice. One member of the Consortium must be designated as the lead entity by the other members of the Consortium and have legal authority to contract with the Federal government.

The lead entity is the recipient (See 2 CFR 200.86) of the DHCS grant funds and accountable for monitoring and reporting on the project performance and financial management of the grant. In addition, the lead entity (recipient) is responsible for subrecipient monitoring and management in accordance with 2 CFR 200.330 and 200.331, respectively. The remaining consortium members are subrecipients (See 2 CFR 200.93). They may receive subawards (See 2 CFR 200.94) from the recipient and are responsible for monitoring and reporting the project performance and financial management of their subaward to the recipient.

(a) An applicant is ineligible if they do not submit ''Evidence of Eligibility'' and ''Consortium Agreements'' as described in Section D.2. of this Notice.

(b) An applicant is ineligible if they have been debarred or suspended or otherwise excluded from or ineligible for participation in Federal assistance programs under Executive Order 12549, ''Debarment and Suspension.'' The Agency will check the System for Award Management (SAM) to determine if the applicant has been debarred or suspended. In addition, an applicant will be considered ineligible for a grant due to an outstanding judgment obtained by the U.S. in a Federal Court (other than U.S. Tax Court), is delinquent on the payment of Federal income taxes, or is delinquent on Federal debt. The applicant must certify as part of the application that they do not have an outstanding judgement against them. The Agency will check the Credit Alert Interactive Voice Response System (CAIVRS) to verify this.

(c) Any corporation (i) that has been convicted of a felony criminal violation under any Federal law within the past 24 months or (ii) that has any unpaid Federal tax liability that has been assessed, for which all judicial and administrative remedies have been exhausted or have lapsed, and that is not being paid in a timely manner pursuant to an agreement with the authority responsible for collecting the tax liability, is not eligible for financial assistance provided with funds appropriated by the Consolidated and Further Continuing Appropriations Act, 2015, unless a Federal agency has considered suspension or debarment of the corporation and has made a determination that this further action is not necessary to protect the interests of the Government.

(d) Applications will be deemed ineligible if the application includes any funding restrictions identified under Section D.6.

(e) Applications will be deemed ineligible if the application is not complete in accordance with the requirements stated in Section C.3.g.

2. Cost Sharing or Matching

Matching funds are not required. However, if you are adding any other contributions to the proposed Project, you must provide documentation indicating who will be providing the matching funds, the amount of funds, when those funds will be provided, and how the funds will be used in the project budget. Examples of acceptable documentation include: A signed letter from the source of funds stating the amount of funds, when the funds will be provided, and what the funds can be used for or a signed resolution from your governing board authorizing the use of a specified amount of funds for specific components of the project. The matching funds you identify must be specifically dedicated to the project and cannot include your organization's general operating budget. No credit will be given for in-kind donations of time, goods, and/or services from any organization, including the applicant organization. Additionally, we will not consider program income or expected revenue as other contributions, unless a commitment letter from the organization that will be paying the fees provides a letter stating the amount of the funds that will be paid, when they will be paid, and what they can be used for, if applicable. If you choose, you may use a template to summarize the matching funds. The template is available either from your Rural Development State Office or the program Web site at: *http://www.rd.usda.gov/programs-services/delta-health-care-services-grants.*

3. Other Eligibility Requirements

The following additional eligibility requirements apply to this program:

(a) *Use of Funds.* An application must propose to use Project funds, including grant and other contributions committed under the evaluation criteria for eligible purposes. Eligible Project purposes include the development of:

• Health care services;

• health education programs;

• health care job training programs; and

• the development and expansion of public health-related facilities in the Delta Region.

(b) *Project Area.* The proposed Project must take place in a Rural Area within the Delta Region as defined in this Notice. However, the applicant need not propose to serve the entire Delta Region.

(c) *Project Input.* Your proposed Project must be developed based on input from local governments, public health care providers, and other entities in the Delta Region.

(d) *Grant Period.* All grant funds are limited to a 24-month performance period. Your proposed grant period should begin no earlier than the anticipated award announcement date, March 1, 2016, and should end no later than 24 months following that date. If you receive an award, your grant period

will be revised to begin on the actual date of award—the date the grant agreement is executed by the Agency—and your grant period end date will be adjusted accordingly. Your Project activities must begin within 90 days of the date of award. If you request funds for a time period beginning before March 1, 2016, and/or ending later than 24 months from that date, your application will be ineligible. The length of your grant period should be based on your Project's complexity, as indicated in your application work plan.

(e) *Multiple Grant Requests.* The Consortium, including its members, is limited to submitting one application for funding under this Notice. We will not accept applications from Consortiums that include members who are also members of other Consortiums that have submitted applications for funding under this Notice. If we discover that a Consortium member is a member of multiple Consortiums with applications submitted for funding under this Notice, all applications will be considered ineligible for funding.

(f) *Performance on Existing DHCS Awards.* If the lead entity, or any of its Consortium members, has an existing DHCS award, they must be performing satisfactorily to be considered eligible for a funding under this Notice. Satisfactory performance includes, but is not limited to, being up-to-date on all financial and performance reports and being current on all tasks as approved in the work plan. The Agency will use its discretion to make this determination.

(g) *Completeness.* Your application must provide all of the information requested in Section D.2. of this Notice. Applications lacking sufficient information to determine eligibility and scoring will be deemed ineligible and will not be considered for scoring.

(h) *Indirect Costs.* Your negotiated indirect cost rate approval does not need to be included in your application, but you will be required to provide it if a grant is awarded. Approval for indirect costs that are requested in an application without an approved indirect cost rate agreement is at the discretion of the Agency.

D. Application and Submission Information

Please see instructions below on how to access and submit a complete application for this funding opportunity.

1. Address To Request Application Package

The application guide and copies of necessary forms for the DHCS Grant Program are available from these sources:

- The Internet at *http://www.rd.usda.gov/programs-services/delta-health-care-services-grants, http://www.grants.gov,* or
- For paper copies of these materials, please call (202) 690–1376.

2. Content and Form of Application Submission

You may submit your application in paper form or electronically through Grants.gov. Your application must contain all required information.

To submit an application electronically, you must follow the instructions for this funding announcement at *http://www.grants.gov.* Please note that we cannot accept emailed or faxed applications.

You can locate the Grants.gov downloadable application package for this program by using a keyword, the program name, or the Catalog of Federal Domestic Assistance Number for this program.

When you enter the Grants.gov Web site, you will find information about submitting an application electronically through the site, as well as the hours of operation.

To use Grants.gov, you must already have a DUNS number and you must also be registered and maintain registration in SAM. We strongly recommend that you do not wait until the application deadline date to begin the application process through Grants.gov.

You must submit all of your application documents electronically through Grants.gov. Applications must include electronic signatures. Original signatures may be required if funds are awarded.

After electronically submitting an application through Grants.gov, you will receive an automatic acknowledgement from Grants.gov that contains a Grants.gov tracking number.

If you want to submit a paper application, send it to the State Office located in the State where you are headquartered. You can find State Office contact information at: *http://www.rd.usda.gov/contact-us/state-offices.*

You are strongly encouraged, but not required, to utilize the DHCS Application Guide found at *http://www.rd.usda.gov/programs-services/delta-health-care-services-grants.* The guide provides specific guidance on each of the items listed and also provides all necessary forms and sample worksheets.

The organization submitting the application will be considered the lead entity. The Contact/Program Manager must be associated with the lead entity submitting the application.

A completed application must include the following:

(a) *Form SF–424,* ''Application for Federal Assistance.''—The application for federal assistance must be completed by the lead entity as described in Section C.1. of this Notice. Your application must include your DUNS number and SAM (CAGE) code and expiration date. Because there are no specific fields for a CAGE code and expiration date, you may identify them anywhere you want to on the form. If you do not include the CAGE code and expiration date and DUNS number in your application, it will not be considered for funding. The form must be signed by an authorized representative.

(b) *Form SF–424A,* ''Budget Information—Non-Construction Programs.'' This form must be completed and submitted as part of the application package for non-construction projects.

(c) *Form SF–424B,* ''Assurances—Non-Construction Programs.'' This form must be completed, signed, and submitted as part of the application package for non-construction projects.

(d) *Form SF–424C,* ''Budget Information—Construction Programs.'' This form must be completed, signed, and submitted as part of the application package for construction projects.

(e) *Form SF–424D,* ''Assurances—Construction Programs.'' This form must be completed, signed, and submitted as part of the application package for construction projects.

(f) *A project abstract.* You must provide a brief summary of the proposed Project, not to exceed 250 words, suitable for dissemination to the public and to Congress.

(g) *Executive summary.* You must provide a more detailed description of your project containing the following information; (1) Legal name of lead applicant, (2) consortium members, (3) applicant type (including consortium members) (4) application type (development of health care services, health education programs, health care job care training programs, or the development and/or expansion of health related facilities, (5) a summary of your project, (6) project goals and (7) how you intend to use the grant funds. Limit two pages.

(h) *Evidence of eligibility.* You must provide evidence of the Consortium's eligibility to apply under this Notice. This section must include a detailed summary demonstrating how each Consortium member meets the

definition of an eligible entity as defined under Definitions of this Notice.

(i) *Consortium agreements.* The application must include a formal written agreement with each Consortium member that addresses the negotiated arrangements for administering the Project to meet Project goals, the Consortium member's responsibilities to comply with administrative, financial, and reporting requirements of the grant, including those necessary to ensure compliance with all applicable Federal regulations and policies, and facilitate a smooth functioning collaborative venture. Under the agreement, each Consortium member must perform a substantive role in the Project and not merely serve as a conduit of funds to another party or parties. This agreement must be signed by an authorized representative of the lead entity and an authorized representative of each partnering consortium entity.

(j) *Scoring documentation.* You must address and provide documentation for each scoring criterion, specifically (1) the rurality of the project area and communities served, (2) the community needs and benefits derived from the project, (3) and project management and organization capability. See Section E.1.

(k) *Work Plan and Budget.* You must provide a work plan and budget that includes the following: (1) The specific activities; such as programs, services, trainings, and/or construction-related activities for a facility to be performed under the Project, (2) the estimated line item costs associated with each activity, including grant funds and other necessary sources of funds; (3) the key personnel who will carry out each activity (including each Consortium member's role), and (4) the specific time frames for completion of each activity.

An eligible start and end date for the project and for individual project tasks must be clearly shown and may not exceed Agency specified timeframes for the grant period. You must show the source and use of both grant and other contributions for all tasks. Other contributions must be spent at a rate equal to, or in advance of, grant funds.

(l) *Financial information and sustainability.* You must provide current financial statements and a narrative description demonstrating sustainability of the project, all of which show sufficient resources and expertise to undertake and complete the project and how the project will be sustained following completion. Applicants must provide 3 years of pro-forma financial statements for the project.

(m) *Evidence of legal authority and existence.* The lead entity must provide evidence of its legal existence and authority to enter into a grant agreement with the Agency and perform the activities proposed under the grant application.

(n) *Evidence of input solicited from local stakeholders.* The application must include documentation detailing support solicited from local government, public health care providers and other entities in the Delta Region. Evidence of support can include; but is not limited to surveys conducted amongst rural residents and stakeholders, notes from focus groups, or letters of support from local entities.

(o) *Service area maps.* You must provide maps with sufficient detail to show the area that will benefit from the proposed facilities and services and the location of the facilities improved or purchased with grant funds if applicable.

(p) *Form AD–3030.* Form AD–3030, ''Representations Regarding Felony Conviction and Tax Delinquent Status for Corporate Applicants,'' if you are a corporation. A corporation is any entity that has filed articles of incorporation in one of the 50 States, the District of Columbia, the Federated States of Micronesia, the Republic of Palau, and the Republic of the Marshall Islands, or the various territories of the United States including American Samoa, Guam, Midway Islands, the Commonwealth of the Northern Mariana Islands, Puerto Rico, or the U.S. Virgin Islands. Corporations include both for profit and non-profit entities.

(q) *Certification of no current outstanding Federal judgment.* You must certify that there are no current outstanding Federal judgments against your property and that you will not use grant funds to pay for any judgment obtained by the United States. To satisfy the Certification requirement, you should include this statement in your application: ''[INSERT NAME OF APPLICANT] certifies that the United States has not obtained an unsatisfied judgment against its property and will not use grant funds to pay any judgments obtained by the United States.'' A separate signature is not required.

(r) *Form RD–1940–20, ''Request for Environmental Information.''* You must submit a completed Form RD 1940–20, ''*Request for Environmental Information,''* and a description of anticipated environmental issues or concerns for all construction related applications. The form can be found at: *http://forms.sc.egov.usda.gov/efcommon/eFileServices/eForms/RD1940-20.PDF.* Additional environmental documentation may be requested in accordance with 7 CFR part 1940 Exhibit H. The submission of the Form RD 1940–20 alone does not constitute compliance with 7 CFR part 1940.

3. DUNS Number and SAM Registration

In order to be eligible (unless you are exempted under 2 CFR 25.110(b), (c) or (d), you are required to:

(a) Provide a valid DUNS number in your application, which can be obtained at no cost via a toll-free request line at (866) 705–5711;

(b) Register in SAM before submitting your application. You may register in SAM at no cost at *https://www.sam.gov/portal/public/SAM/;* and

(c) Continue to maintain an active SAM registration with current information at all times during which you have an active Federal award or an application or plan under consideration by a Federal awarding agency.

The Agency may not make a Federal award to you until you have complied with all applicable DUNS and SAM requirements. If you have not fully complied with requirements by the time the Agency is ready to make a Federal award, the Agency may determine that the applicant is not qualified to receive a Federal award and the Agency may use this determination as a basis for making an award to another applicant.

4. Submission Date and Time

Application Deadline Date: December 7, 2015.

Explanation of Deadlines: Complete paper applications must be postmarked and mailed, shipped, or sent overnight by December 7, 2015. The Agency will determine whether your application is late based on the date shown on the postmark or shipping invoice. You may also hand carry your application to one of our field offices, but it must be received by close of business on the deadline date. If the due date falls on a Saturday, Sunday, or Federal holiday, the reporting package is due the next business day. Late applications are not eligible for funding.

Electronic applications must be RECEIVED by *http://www.grants.gov* by midnight Eastern time December 2, 2015, to be eligible for funding. Please review the Grants.gov Web site at *http://grants.gov/applicants/organization_registration.jsp* for instructions on the process of registering your organization as soon as possible to ensure you are able to meet the electronic application deadline. Grants.gov will not accept applications submitted after the deadline.

5. Intergovernmental Review

Executive Order (EO) 12372, Intergovernmental Review of Federal Programs, applies to this program. This EO requires that Federal agencies provide opportunities for consultation on proposed assistance with State and local governments. Many States have established a Single Point of Contact (SPOC) to facilitate this consultation. A list of States that maintain a SPOC may be obtained at *http://www.whitehouse.gov/omb/grants_spoc.* If your State has a SPOC, you may submit your application directly for review. Any comments obtained through the SPOC must be provided to Rural Development for consideration as part of your application. If your State has not established a SPOC or you do not want to submit your application to the SPOC, Rural Development will submit your application to the SPOC or other appropriate agency or agencies.

You are also encouraged to contact Cooperative Programs at 202–690–1376 or *cpgrants@wdc.usda.gov* if you have questions about this process.

6. Funding Restrictions

The use of project funds, including grant funds and other contributions, cannot be used for ineligible purposes. In addition, you shall not use project funds for the following:

(a) To duplicate current services or to replace or to substitute support previously provided. If the current service is inadequate, however, project funds may be used to expand the level of effort or a service beyond what is currently being provided;

(b) To pay for costs to prepare the application for funding under this Notice;

(c) To pay for costs of the project incurred prior to the effective date of the period of performance;

(d) To pay expenses for applicant employee training;

(e) Fund political activities;

(f) To pay for assistance to any private business enterprise which does not have at least 51 percent ownership by those who are either citizens of the United States or reside in the United States after being legally admitted for permanent residence;

(g) To pay any judgment or debt owed to the United States.

(h) Engage in any activities that are considered a Conflict of Interest, as defined by this Notice; or

(i) Fund any activities prohibited by 2 CFR 200.

In addition, your application will not be considered for funding if it does any of the following:

- Requests more than the maximum grant amount: or
- Proposes ineligible costs that equal more than 10 percent of the project funds.

If you include funds in your budget that are for ineligible purposes, we will consider the application for funding if the ineligible purposes total 10 percent or less of an applicant's project funds. However, if the application is successful, those ineligible costs must be removed from the work plan and budget and replaced with eligible costs before we will make the grant award, or the grant award will be reduced accordingly. If we cannot determine the percentage of ineligible costs, the application will not be considered for funding.

7. Other Submission Requirements

(a) You should not submit your application in more than one format. You must choose whether to submit your application in hard copy or electronically. Applications submitted in hard copy should be mailed or hand-delivered to the State Office where the project will primarily take place. You can find State Office contact information at: *http://www.rd.usda.gov/contact-us/state-offices.* To submit an application electronically, you must follow the instructions for this funding announcement at *http://www.grants.gov.* A password is not required to access the Web site.

(b) National Environmental Policy Act.

This Notice has been reviewed in accordance with 7 CFR part 1940, subpart G, ''Environmental Program.'' We have determined that an Environmental Impact Statement is not required because the issuance of regulations and instructions, as well as amendments to them, describing administrative and financial procedures for processing, approving, and implementing the Agency's financial programs is categorically excluded in the Agency's National Environmental Policy Act (NEPA) regulation found at 7 CFR 1940.310(e)(3) of subpart G, ''Environmental Program.'' We have determined that this Notice does not constitute a major Federal action significantly affecting the quality of the human environment. Non-construction projects applying under this Notice are hereby classified as Categorical Exclusions according to 7 CFR 1940.310(e), the award of financial assistance for planning purposes, management and feasibility studies, or environmental impact analyses, which do not require any additional documentation.

(c) Civil Rights Compliance Requirements.

All grants made under this Notice are subject to Title VI of the Civil Rights Act of 1964 as required by the USDA (7 CFR part 15, subpart A) and Section 504 of the Rehabilitation Act of 1973.

E. Application Review Information

We will review your application to determine if it is complete and eligible. If at any time we determine that your application is ineligible, you will be notified in writing as to the reasons it was determined ineligible and you will be informed of your review and appeal rights.

We will only score applications in which the lead entity, partnering Consortium member entities, and the project are eligible. The applications must also be complete and sufficiently responsive to program requirements.

We will review each application to determine if it is eligible for funding and complete, based on the requirements of this Notice as well as other applicable Federal regulations.

Applications that are determined to be eligible and complete will be evaluated based on the criteria described below.

1. Criteria

For each criterion, you must show how the Project has merit and why it is likely to be successful. If you do not address all parts of a criterion your application will be deemed ineligible. If you do not sufficiently communicate relevant Project information, you will receive lower scores. DHCS is a competitive program, so you will receive scores based on the quality of your responses. Simply addressing the criteria will not guarantee higher scores. The maximum number of points that can be awarded to your application is 100. For this announcement, the minimum score requirement for funding is 60 points. It is at the Agency's discretion to fund applications with a score of 59 or less if it is in the best interest of the Federal government.

The evaluation criteria are detailed in the DHCS Grant Application Guide which can be found at *http://www.rd.usda.gov/programs-services/delta-health-care-services-grants.* You must address each evaluation criterion outlined in this Notice. Any criterion not substantively addressed will receive zero points. There are three criteria totaling 100 points. They are listed below:

(a) Rurality of the Project and communities served (maximum of 30 points)—The rurality of the communities served by the Project is an

objective criterion that measures the rurality of the Project's service area. It is determined by the population of the community. The rurality calculation provided in the application will be checked and, if necessary, corrected by us.

Level	Community Having a Population		
	Over	Not in excess of	Points
1	0	5,000	30
2	5,001	20,000	20
3	20,001	50,000	10
4	50,001 or located in an Urbanized Area		0

(b) The Community Needs and Benefits derived from the Project (maximum of 30 points)—We will assess how the Project's purpose and goals benefit the residents in the Delta Region. This criterion will be scored based on the documentation in support of the community needs for health services and public health-related facilities and the benefits to people living in Delta Regional derived from the implementation of the proposed Project. It should lead clearly to the identification of the Project participant pool and the target population for the Project, and provide convincing links between the Project and the benefits to the community to address its health needs. RBS will consider:

(1) The extent of the applicant's documentation explaining the health care needs, issues, and challenges facing the service area. Include what problems the residents face and how the Project will benefit the residents in the region.

(2) The extent to which the applicant is able to show the relationship between the Project's design, outcome, and benefits.

(3) The extent to which the applicant explains the Project and its implementation and provides milestones which are well-defined and can be realistically completed.

(4) The extent to which the applicant clearly outlines a plan to track, report, and evaluate performance outcomes.

Applicants should attempt to quantify benefits in terms of outcomes from the Project; that is, ways in which peoples' lives, or the community, will be improved. Provide estimates of the number of people affected by the benefits arising from the project. The Agency has also established annual performance measures to evaluate the DHCS program. Use this section to provide estimates on the following performance measures as part of your narrative:

- Number of businesses assisted;
- Number of jobs created;
- Number of jobs saved;
- Number of individuals assisted/trained.

It is permissible to have a zero in a performance element. When you calculate jobs created, estimates should be based upon actual jobs to be created by your organization as a result of the DHCS funding or actual jobs to be created by businesses as a result of assistance from your organization. When you calculate jobs saved, estimates should be based only on actual jobs that would have been lost if your organization did not receive DHCS funding or actual jobs that would have been lost without assistance from your organization.

You can also suggest additional performance elements for example where job creation or jobs saved may not be a relevant indicator. These additional criteria should be specific, measurable performance elements that could be included in an award document.

(c) The Project Management and Organization Capability (maximum of 40 points)—We will evaluate the Consortium's experience, past performance, and accomplishments addressing health care issues to ensure effective Project implementation. This criterion will be scored based on the documentation of the Project's management and organizational capability. RBS will consider:

(1) The degree to which the organization has a sound management and fiscal structure including: well-defined roles for administrators, staff, and established financial management systems.

(2) The extent to which the applicant identifies and demonstrates that qualifications, capabilities, and educational background of the identified key personnel (at a minimum the Project Manager) who will manage and implement programs are relevant and will contribute to the success of the Project.

(3) The extent to which the applicant demonstrates current successful and effective experience (or recent past experience) addressing the health care issues in the Delta Region.

(4) The extent to which the applicant has experience managing grant-funded programs.

(5) The extent to which the applicant is able to correlate and support the budget to the project phases and implementation timeline.

(6) The extent to which administrative/management costs are balanced with funds designated for the provision of programs and services.

(7) The extent and depth of membership in the applicant's Consortium of regional institutions of higher education, academic health and research institutes and economic development entities located in the Delta Region.

2. Review and Selection Process

The State Offices will review applications to determine if they are eligible for assistance based on requirements in this Notice and other applicable Federal regulations. If determined eligible, your application will be scored by a panel of National and State Office employees in accordance with the point allocation specified in this Notice. A recommendation will be submitted to the Administrator to fund applications in highest ranking order, subject to availability of funds. It is at the Agency's discretion to fund applications with a score of 59 or less if it is in the best interest of the Federal government. If your application is evaluated, but not funded, it will not be carried forward into the next competition.

F. Federal Award Administration Information

1. Federal Award Notices

If you are selected for funding, you will receive a signed notice of Federal award by postal mail from the State Office where your application was submitted, containing instructions on requirements necessary to proceed with execution and performance of the

award. You must comply with all applicable statutes, regulations, and notice requirements before the grant award will be approved. We recognize that each funded Project is unique and therefore the terms and conditions of each award may vary. We will notify applicants whose applications are selected for funding by sending a letter of conditions, which must be met before the award can be finalized.

Once the conditions of the award are met, we will issue a grant agreement, which must be signed by the lead entity and us before the period of performance can begin. The lead entity may administer the award using the traditional subaward approach to the other Consortium members.

If you are not selected for funding, you will be notified in writing via postal mail and informed of any review and appeal rights. See 7 CFR part 11 for USDA National Appeals Division procedures. Funding of successfully appealed applications will be limited to available FY 2015 funding. You must comply with all applicable statutes, regulations, and notice requirements before the grant will be approved.

2. Administrative and National Policy Requirements

Additional requirements that apply to grantees selected for this in program can be found in 2 CFR parts 180, 200, 400, 415, 417, 418, 421, 25, and 170; and 48 CFR 31.2, and successor regulations to these parts. In addition, all recipients of Federal financial assistance are required to comply with the Federal Funding Accountability and Transparency Act of 2006 and must report information about sub-awards and executive compensation (see 2 CFR part 170). These recipients must also maintain their registration in the SAM database as long as their grants are active. These regulations may be obtained at *http://www.gpoaccess.gov/cfr/index.html.*

The following additional requirements apply to grantees selected for this program:

- Agency-approved Grant Agreement.
- Letter of Conditions.
- Form RD 1940–1, ''Request for Obligation of Funds.''
- Form RD 1942–46, ''Letter of Intent to Meet Conditions.''
- Form AD–1047, ''Certification Regarding Debarment, Suspension, and Other Responsibility Matters—Primary Covered Transactions.''
- Form AD–1048, ''Certification Regarding Debarment, Suspension, Ineligibility and Voluntary Exclusion—Lower Tier Covered Transactions.''
- Form AD–1049, ''Certification Regarding a Drug-Free Workplace Requirement (Grants).''
- Form AD–3031, ''Assurance Regarding Felony Conviction or Tax Delinquent Status for Corporate Applicants.''
- Form RD 400–4, ''Assurance Agreement.''
- RD Instruction 1940–Q, Exhibit A–1, ''Certification for Contracts, Grants and Loans''
- SF–LLL, ''Disclosure of Lobbying Activities'' if applicable.

3. Reporting

(a) *Federal Financial Reports.*

(1) An SF–425, ''Federal Financial Report,'' must be submitted listing expenditures according to agreed upon budget categories, on a semiannual basis. Reporting periods end each August 31 and February 28. Reports are due 30 days after the reporting period ends.

(2) A final project and financial status report within 90 days after the expiration or termination of the grant.

(3) Provide outcome project performance reports and final deliverables.

(b) *Performance Reports.*

Semiannual performance reports should compare accomplishments to the objectives stated in the proposal. Identify all tasks completed to date and provide documentation supporting the reported results. If the original schedule provided in the work plan is not being met, the report should discuss the problems or delays that may affect completion of the project. Objectives for the next reporting period should be listed. Compliance with any special condition on the use of award funds should be discussed. Reports are due as provided in paragraph 3.a. of this section.

(c) *Subrecipient Reporting.*

The lead entity must have the necessary processes and systems in place to comply with the reporting requirements for first-tier sub-awards and executive compensation under the Federal Funding Accountability and Transparency Act of 2006 in the event the applicant receives funding unless such applicant is exempt from such reporting requirements pursuant to 2 CFR 170.110(b). The reporting requirements under the Transparency Act pursuant to 2 CFR part 170 are as follows:

(1) First Tier Sub-Awards of $25,000 or more in non-Recovery Act funds (unless they are exempt under 2 CFR part 170) must be reported by the Recipient to *http://www.fsrs.gov* no later than the end of the month following the month the obligation was made.

(2) The Total Compensation of the Recipient's Executives (five most highly compensated executives) must be reported by the Recipient (if the Recipient meets the criteria under 2 CFR part 170) to *http://www.sam.gov* by the end of the month following the month in which the award was made.

(3) The Total Compensation of the Subrecipient's Executives (five most highly compensated executives) must be reported by the Subrecipient (if the Subrecipient meets the criteria under 2 CFR part 170) to the Recipient by the end of the month following the month in which the sub-award was made. Further details regarding these requirements can be obtained at *http://www.ecfr.gov/cgi-bin/text-idx?tpl=/ecfrbrowse/Title02/2cfr170_main_02.tpl.*

(d) *Closeout.*

Grant closeout activities include a letter to the grantee with final instructions and reminders for amounts to be de-obligated for any unexpended grant funds, final project performance reports due, submission of outstanding deliverables, audit requirements, or other outstanding items of closure.

(e) *Report for Public Distribution.*

You must provide a report suitable for public distribution that describes the accomplishments made during this project. We may use this report as a success story to promote this program.

G. Federal Awarding Agency Contacts

If you have questions about this Notice, please contact the State Office as identified in the **ADDRESSES** section of this Notice. You are also encouraged to visit the application Web site for application tools, including an application guide and templates. The Web site address is: *http://www.rd.usda.gov/programs-services/delta-health-care-services-grants.*

H. Other Information

Nondiscrimination Statement

USDA prohibits discrimination in all its programs and activities on the basis of race, color, national origin, age, disability, and where applicable, sex, marital status, familial status, parental status, religion, sexual orientation, genetic information, political beliefs, reprisal, or because all or part of an individual's income is derived from any public assistance program. (Not all prohibited bases apply to all programs.) Persons with disabilities who require alternative means for communication of program information (Braille, large print, audiotape, etc.) should contact

USDA's Target Center at (202) 720–2600 (voice and TDD).

If you wish to file a Civil Rights program complaint of discrimination, complete the USDA Program Discrimination Complaint Form (PDF) found online at *http://www.ascr.usda.gov/complain_filing_cust.html* or at any USDA office, or call (866) 632–9992 to request the form. You may also write a letter containing all of the information requested in the form. Send your completed complaint form or letter to us by mail at U.S. Department of Agriculture, Director, Office of Adjudication, 1400 Independence Avenue SW., Washington, DC 20250–9410, by fax (202) 690–7442, or email at *program.intake@usda.gov.*

Individuals who are deaf, hard of hearing, or have speech disabilities and who wish to file either an EEO or program complaint, please contact USDA through the Federal Relay Service at (800) 877–8339 or (800) 845–6136 (in Spanish).

Persons with disabilities who wish to file a program complaint, please see information above on how to contact us by mail directly or by email. If you require alternative means of communication for program information (*e.g.,* Braille, large print, audiotape, etc.), please contact USDA's TARGET Center at (202) 720–2600 (voice and TDD).

Dated: August 28, 2015.

Samuel H. Rikkers,

Acting Administrator, Rural Business-Cooperative Programs.

[FR Doc. 2015–22546 Filed 9–4–15; 8:45 am]

BILLING CODE 3410–XY–P

COMMISSION ON CIVIL RIGHTS

Sunshine Act Meeting

AGENCY: United States Commission on Civil Rights.

ACTION: Notice of Commission Business Meeting.

DATES: *Date and Time:* Friday, September 11, 2015; 10:00 a.m. EST.

ADDRESSES: *Place:* 1331 Pennsylvania Ave. NW., Suite 1150, Washington, DC.

FOR FURTHER INFORMATION CONTACT: Lenore Ostrowsky, Acting Chief, Public Affairs Unit (202) 376–8591.

Hearing-impaired persons who will attend the briefing and require the services of a sign language interpreter should contact Pamela Dunston at (202) 376–8105 or at *signlanguage@usccr.gov* at least seven business days before the scheduled date of the meeting.

SUPPLEMENTARY INFORMATION:

Meeting Agenda

This meeting is open to the public.

I. Approval of Agenda

II. Program Planning
- Status on Commission Reports and hiring of contractors by OCRE
- Discussion on hearing dates for 2016 Statutory Enforcement Report
- Discussion On Changing October 16 and November 6 Commission Business Meeting Dates
- Discussion and vote on part A of Peaceful Coexistence report

III. Management and Operations
- Staff Director Report

IV. State Advisory Committee (SAC) Appointments
- Ohio

V. Adjourn Meeting

Dated: September 3, 2015.

David Mussatt,

Chief, Regional Programs Unit U.S. Commission on Civil Rights.

[FR Doc. 2015–22652 Filed 9–3–15; 4:15 pm]

BILLING CODE 6335–01–P

DEPARTMENT OF COMMERCE

International Trade Administration

Aerospace Executive Service Trade Mission at Singapore Airshow; February 15–19, 2016

AGENCY: International Trade Administration, Department of Commerce.

ACTION: Notice.

Mission Description

The United States Department of Commerce, International Trade Administration is organizing an Aerospace Executive Service Trade Mission (AESTM) to Singapore in conjunction with the Singapore Airshow 2016 (*http://www.singaporeairshow.com*).

The AESTM will include representatives from a variety of U.S. aerospace-industry manufacturers and service providers. The mission participants will be introduced to international agents, distributors and end-users whose capabilities are targeted to each participant's needs. This year a key mission goal is to recruit U.S. firms that have not previously participated in this AESTM to the Singapore Airshow.

Mission participants will also be briefed by key local industry leaders who can advise on local market conditions and opportunities.

In addition, the Commercial Service will offer its AsiaNow Showtime program during the Singapore Airshow, where mission participants can meet one-on-one with Commercial Service aerospace and defense industry specialists from various markets in Asia. The industry specialists will be on-hand to discuss market trends and opportunities in their respective markets.

Mission Goals

The mission's goal for the Aerospace Executive Service (AES) at the Singapore Airshow is to facilitate an effective presence for small to medium-sized U.S. companies without the major expenses associated with purchasing and staffing exhibition space. The AES will enable U.S. aerospace companies to familiarize themselves with this important air show, conduct market research, and explore export opportunities through pre-screened meetings with potential partners. It will give the U.S. companies a small presence at the show, with an office infrastructure environment and the support of knowledgeable U.S. Commercial Service staff focused on furthering company-specific objectives. This mission also seeks to recruit a minimum of six participants new to the AESTM at the Singapore Airshow.

Mission Scenario

Within the U.S. Pavilion at the 2016 Singapore Airshow, the Commercial Service will maintain a 66-square-meter booth that will include 48 square meters of kiosk space for the mission participants, where each participant may display company literature and conduct meetings with visitors to the air show, including buyer delegations from the Asia-Pacific region recruited by Commercial Service staff as part of the AsiaNow program. The Commercial Service booth will also house an area for meetings with Commercial Service staff and a Business Information Office (BIO) reception area (18 square meters). Commercial Service staff will be available to provide market information and offer logistical assistance to AESTM participants throughout the trade mission duration at the Singapore Airshow.

- In summary, participation in the AESTM includes:
- Pre-show breakfast briefing on February 15;
- Daily transportation to and from the designated hotel and Singapore Airshow;
- Pre-scheduled meetings with potential partners, distributors, and end users recruited by the Commercial Service;
- One show entry pass per company representative;

• Participation in U.S. Exhibitors Welcome Reception;

• One invitation to the U.S. Ambassador's reception per participant;

• Access to Official U.S. Pavilion/BIO amenities, including meeting area and shared business center when not in use for AsiaNow one-on-one appointments;

• Individual kiosk space (4.0 m^2) within the U.S. Pavilion for displaying company marketing materials and conducting meetings;

• Copy of the official 2016 Singapore Airshow Exhibitor's Directory;

• Meetings with Commercial Service aerospace and defense industry specialists from U.S. Embassies and Consulates across the Asia-Pacific region;

• On-site logistical support by U.S. Commercial Service staff.

Proposed Timetable

Sunday, February 14, 2016

Arrival of AESTM participants

Monday, February 15, 2016

Briefing at the designated hotel on country/regional market and AESTM event logistics
One-on-one business matchmaking appointments
Evening welcome reception for U.S. exhibitors

Tuesday, February 16, 2016

Attend U.S. Pavilion opening with VIP delegates at Singapore Airshow
Participate in Singapore Airshow

Wednesday, February 17, 2016

Participate in Singapore Airshow
Evening U.S. Ambassador's Reception

Thursday, February 18–Friday, February 19, 2016

AsiaNow Showtime meetings, participants walk show floor, and conduct any follow-up meetings
Friday afternoon AES Trade Mission participants' debrief with USCS staff
Friday evening no host dinner (optional)

Participation Requirements

All parties interested in participating in the AESTM at the Singapore Airshow must complete and submit an application package for consideration by the Department of Commerce. All applicants will be evaluated on their ability to meet certain conditions and best satisfy the selection criteria as outlined below. A maximum of 12 companies will be selected to participate in the mission from the applicant pool. As a condition of the Singapore Airshow organizer on Commercial Service use of booth space at this event, half of the mission participation (at least six participants) is reserved for companies that have not previously participated in the AESTM at the Singapore Airshow. These will be selected on a first-come, first-served basis. The remaining participants, up to the maximum of 12, may include companies that have previously participated in the AESTM, also to be selected on a first-come, first-served basis. U.S. companies already doing business in Singapore or elsewhere in the Asia-Pacific region as well as U.S. companies seeking to enter those markets for the first time may apply.

Fees and Expenses

After a company has been selected to participate on the mission, a payment to the Department of Commerce in the form of a participation fee is required. The participation fee will be $9,400 for large firms and $8,700 for a small or medium-sized enterprise (SME).* The fee for each additional firm representative (large firm or SME) is $300. The participation fee is inclusive of registration for exhibiting at the Singapore Airshow. Expenses for travel to and from Singapore, lodging, meals, and incidentals will be the responsibility of each mission participant.

Conditions for Participation

• An applicant must submit a completed and signed mission application and supplemental application materials, including adequate information on the company's products and/or services, primary market objectives, and goals for participation. The applicant must also state whether the company has previously participated in the AESTM at the Singapore Airshow. If the Department of Commerce receives an incomplete application, the Department may reject the application, request additional information, or take the lack of information into account when evaluating the applications.

• Each applicant must also certify that the products and services it seeks to export through the mission are either produced in the United States, or, if not, marketed under the name of a U.S. firm and have at least 51 percent U.S. content of the value of the finished product or service.

• Each applicant's products must meet the Singapore Airshow trade fair rules, which can be found at *http://www.singaporeairshow.com/exhibit-profile.html.*

Selection Criteria for Participation

Selection will be based on the following criteria:

• Suitability of the company's products or services to the Asia Pacific markets.

• Applicant's potential for business in Asia Pacific, including likelihood of exports resulting from the mission.

• Consistency of the applicant's goals and objectives with the stated scope of the mission.

As explained above, as a condition of the Singapore Airshow organizer on Commercial Service use of booth space at this event, half of the mission participation (at least six participants) is reserved for companies that have not previously participated in the AESTM at the Singapore Airshow. Previous participation in the AESTM at the Singapore Airshow will be considered in making selection decisions for these six opportunities to participate. Previous experience will not be considered when selecting applicants for the remaining six opportunities.

Referrals from political organizations and any documents containing references to partisan political activities (including political contributions) will be removed from an applicant's submission and not considered during the selection process.

Timeframe for Recruitment and Applications

Mission recruitment will be conducted in an open and public manner, including publication in the **Federal Register** and posting on the Commerce Department trade missions calendar—*http://export.gov/trademissions/*—and other Internet Web sites, publication in domestic trade publications and association newsletters, mailings from internal mailing lists, faxes to internal aerospace clients, emails to aerospace distribution lists, and promotion at industry meetings, symposia, conferences, trade shows, and other events. The ITA Aerospace and Defense Technology Team members in U.S. Export Assistance Centers will have the lead in recruiting the AESTM.

Recruitment for the mission will begin immediately and conclude no later than November 30, 2015. The mission will open on a first-come, first-served basis, as outlined above in the

* An SME is defined as a firm with 500 or fewer employees or that otherwise qualifies as a small business under SBA regulations (see *http://www.sba.gov/services/contractingopportunities/sizestandardstopics/index.html*). Parent companies, affiliates, and subsidiaries will be considered when determining business size. The dual pricing reflects the Commercial Service's user fee schedule that became effective May 1, 2008 (see *http://www.export.gov/newsletter/march2008/initiatives.html* for additional information).

Participation Requirements section. Applications received after November 30, 2015, will be considered only if space and scheduling constraints permit.

Contacts

Aerospace and Defense Technology Team: Jason Sproule, U.S. Export Assistance Center, 444 Flower Street, 37th Floor, Los Angeles, CA 90071, Tel: (213) 894–8785, Email: *Jason.Sproule@.trade.gov.*

US and Foreign Commercial Service in Singapore: Hawcheng Ng, American Embassy, 27 Napier Road, Singapore 258508, Tel. 011–(65) 6476–9037, Fax 011–(65) 6476–9080, Email: *Hawcheng.Ng@trade.gov.*

Frank Spector,

Director (A), Trade Mission Office.

[FR Doc. 2015–22072 Filed 9–4–15; 8:45 am]

BILLING CODE 3510–DR–P

DEPARTMENT OF COMMERCE

National Institute of Standards and Technology

Manufacturing Extension Partnership Advisory Board

AGENCY: National Institute of Standards and Technology, Commerce.

ACTION: Notice of open meeting.

SUMMARY: The National Institute of Standards and Technology (NIST) announces that the Manufacturing Extension Partnership (MEP) Advisory Board will hold an open meeting on Thursday September 24, 2015, from 8:30 a.m. to 4:30 p.m. Central Time.

DATES: The meeting will be held Thursday, September 24, 2015, from 8:30 a.m. to 4:30 p.m. Central Time.

ADDRESSES: The meeting will be held at the Hyatt Regency Dallas, 300 Reunion Boulevard, Dallas, TX 75207. Please note admittance instructions in the **SUPPLEMENTARY INFORMATION** section below.

FOR FURTHER INFORMATION CONTACT: Kari Reidy, Manufacturing Extension Partnership, National Institute of Standards and Technology, 100 Bureau Drive, Mail Stop 4800, Gaithersburg, Maryland 20899–4800, telephone number (301) 975–4919, email: *kari.reidy@nist.gov.*

SUPPLEMENTARY INFORMATION: The MEP Advisory Board (Board) is authorized under Section 3003(d) of the America COMPETES Act (Pub. L. 110–69); codified at 15 U.S.C. 278k(e), as amended, in accordance with the provisions of the Federal Advisory Committee Act, as amended, 5 U.S.C. App. The Board is composed of 10 members, appointed by the Director of NIST. Hollings MEP is a unique program, consisting of centers across the United States and Puerto Rico with partnerships at the state, federal, and local levels. The Board provides a forum for input and guidance from Hollings MEP program stakeholders in the formulation and implementation of tools and services focused on supporting and growing the U.S. manufacturing industry, provides advice on MEP programs, plans, and policies, assesses the soundness of MEP plans and strategies, and assesses current performance against MEP program plans.

Background information on the Board is available at *http://www.nist.gov/mep/about/advisory-board.cfm.*

Pursuant to the Federal Advisory Committee Act, as amended, 5 U.S.C. App., notice is hereby given that the MEP Advisory Board will hold an open meeting on Thursday, September 24, 2015, from 8:30 a.m. to 4:30 p.m. Central Time. This meeting will focus on updates from the Advisory Board Sub-committees on (1) Update on MEP Competition (2) Evaluation System (3) Updates from Board Subcommittees (4) Strategic Planning.

The final agenda will be posted on the MEP Advisory Board Web site at *http://www.nist.gov/mep/about/advisory-board.cfm.* This meeting is being held in conjunction with the MEP Update meeting that will be held September 23, 2015 also at the Hyatt Regency Dallas.

Admittance Instructions: Anyone wishing to attend the MEP Advisory Board meeting should submit their name, email address and phone number to Kari Reidy (*Kari.Reidy@nist.gov* or 301–975–4919) no later than Monday, September 14, 2015, 5:00 p.m. Eastern Time.

Individuals and representatives of organizations who would like to offer comments and suggestions related to the MEP Advisory Board's business are invited to request a place on the agenda. Approximately 15 minutes will be reserved for public comments at the end of the meeting. Speaking times will be assigned on a first-come, first-served basis. The amount of time per speaker will be determined by the number of requests received but is likely to be no more than three to five minutes each. The exact time for public comments will be included in the final agenda that will be posted on the MEP Advisory Board Web site as *http://www.nist.gov/mep/about/advisory-board.cfm.* Questions from the public will not be considered during this period. Speakers who wish to expand upon their oral statements, those who had wished to speak but could not be accommodated on the agenda, and those who were unable to attend in person are invited to submit written statements to the MEP Advisory Board, National Institute of Standards and Technology, National Institute of Standards and Technology, 100 Bureau Drive, Mail Stop 4800, Gaithersburg, Maryland 20899–4800, or via fax at (301) 963–6556, or electronically by email to *kari.reidy@nist.gov.*

Richard Cavanagh,

Acting Associate Director for Laboratory Programs.

[FR Doc. 2015–22544 Filed 9–4–15; 8:45 am]

BILLING CODE 3510–13–P

DEPARTMENT OF COMMERCE

National Oceanic and Atmospheric Administration

RIN 0648–XE165

Pacific Islands Fisheries; Public Meeting

AGENCY: National Marine Fisheries Service (NMFS), National Oceanic and Atmospheric Administration (NOAA), Commerce.

ACTION: Notice; public meetings.

SUMMARY: NMFS announces that the Center for Independent Experts (CIE) will meet to review methods for assessing stocks in coral reef fisheries using information on fish length and life history.

DATES: See **SUPPLEMENTARY INFORMATION** section for meeting dates and times.

ADDRESSES: The meeting location is in Room 208, Hemenway Hall, University of Hawaii, 2445 Campus Road, Honolulu, HI 96822.

FOR FURTHER INFORMATION CONTACT: Christofer H. Boggs, (808) 725–5364, or *Christofer.Boggs@noaa.gov.*

SUPPLEMENTARY INFORMATION: The meeting schedule and agenda are as follows:

1. Tuesday, September 8, 2015 (9 a.m.–4 p.m.)
   - Introduction
   - Background information—Objectives and Terms of Reference
   - Fishery Operation and Management
   - Data—State of Hawaii System; Coral Reef Ecosystem Division surveys; biological data; other data
   - Panel Questions and Answers
2. Wednesday, September 9, 2015 (9 a.m.–4 p.m.)
   - Presentation and Review of Stock

Assessment
- Panel Questions and Answers

3. Thursday, September 10, 2015 (9 a.m.–4 p.m.)
- Continue Assessment Review (½ day)
- Panel Questions and Answers
- Panel Discussions (Closed)

4. Friday, September 11, 2015 (9 a.m.–4 p.m.)
- Panel Discussions (½ day)
- Present Results (afternoon)
- Adjourn

The order in which agenda items are addressed may change. The meetings will run as late as necessary to complete scheduled business.

Although non-emergency issues not contained in this agenda may come up at the meeting for discussion, those issues may not be the subject of formal action during the meeting. Action will be restricted to those issues specifically listed in this notice and any issues arising after publication of this notice that require emergency action under section 305(c) of the Magnuson-Stevens Act, provided the public has been notified of the intent to take final action to address the emergency.

Special Accommodations

These meetings are physically accessible to people with disabilities. Direct requests for sign language interpretation or other auxiliary aids to Christofer Boggs, (808) 725–5364 or *Christofer.Boggs@noaa.gov.*

Authority: 16 U.S.C. 1801 *et seq.*

Dated: September 2, 2015.

Jennifer M. Wallace,

Acting Director, Office of Sustainable Fisheries, National Marine Fisheries Service.

[FR Doc. 2015–22536 Filed 9–4–15; 8:45 am]

BILLING CODE 3510–22–P

DEPARTMENT OF COMMERCE

National Oceanic and Atmospheric Administration

RIN 0648–XE135

Western Pacific Management Council; Public Meeting

AGENCY: National Marine Fisheries Service (NMFS), National Oceanic and Atmospheric Administration (NOAA), Commerce.

ACTION: Notice of a public meeting.

SUMMARY: The Western Pacific Fishery Management Council (Council) will convene a half-day meeting on Friday, September 25, 2015 regarding social, economic, ecological, and management uncertainty (SEEM) factors pertinent to setting annual catch limits (ACLs) for bottomfish fisheries in American Samoa, Guam, and the Commonwealth of the Northern Mariana Islands.

DATES: The meeting will be held on Friday, September 25, 2015, starting at 1 p.m. Hawaii Standard Time.

ADDRESSES: The meeting will be held at the Council office, 1164 Bishop St., 14th Floor, Honolulu, HI 96813 and via teleconference; conference telephone: (808) 522–3560.

FOR FURTHER INFORMATION CONTACT: Kitty M. Simonds, Executive Director, Western Pacific Fishery Management Council; telephone: (808) 522–8220.

SUPPLEMENTARY INFORMATION:

Agenda

Friday, September 25, 2015

Following introductions, participants will review the overfishing limit for territorial bottomfish fisheries and the results of risk analyses that considered quality of the stock assessment, uncertainty characteristics, stock status, and productivity and susceptibility. Participants will then discuss social, economic, ecological, and management uncertainty factors relevant to these fisheries that may warrant the Council to consider additional catch limit reductions. Finally, individuals will score these factors and these scores will be averaged in order to reach consensus on a recommendation to the Council.

Special Accommodations

This meeting is physically accessible to people with disabilities. Requests for sign language interpretation or other auxiliary aids should be directed to Kitty M. Simonds (see **ADDRESSES**) at least 5 days prior to the meeting date.

Dated: September 2, 2015.

Tracey L. Thompson,

Acting Deputy Director, Office of Sustainable Fisheries, National Marine Fisheries Service.

[FR Doc. 2015–22540 Filed 9–4–15; 8:45 am]

BILLING CODE 3510–22–P

DEPARTMENT OF COMMERCE

National Oceanic and Atmospheric Administration

RIN 0648–XE133

Fisheries of the Gulf of Mexico; Southeast Data, Assessment, and Review (SEDAR); Public Meeting

AGENCY: National Marine Fisheries Service (NMFS), National Oceanic and Atmospheric Administration (NOAA), Commerce.

ACTION: Notice of SEDAR 45 pre-workshop webinar for Gulf of Mexico Vermilion Snapper.

SUMMARY: The SEDAR assessment of the Gulf of Mexico Vermilion Snapper will consist of one in-person workshop and a series of webinars. See **SUPPLEMENTARY INFORMATION**.

DATES: The SEDAR pre-Workshop webinar will be held September 25, 2015, from 10 a.m. to 12 p.m. Eastern Standard Time.

ADDRESSES: *Meeting address:* The meeting will be held via webinar. The webinar is open to members of the public. Those interested in participating should contact Julie A. Neer at SEDAR (see **FOR FURTHER INFORMATION CONTACT**) to request an invitation providing webinar access information. Please request webinar invitations at least 24 hours in advance of each webinar.

SEDAR address: 4055 Faber Place Drive, Suite 201, North Charleston, SC 29405.

FOR FURTHER INFORMATION CONTACT: Julie A. Neer, SEDAR Coordinator; (843) 571–4366; email: *Julie.neer@safmc.net.*

SUPPLEMENTARY INFORMATION:

The Gulf of Mexico, South Atlantic, and Caribbean Fishery Management Councils, in conjunction with NOAA Fisheries and the Atlantic and Gulf States Marine Fisheries Commissions have implemented the Southeast Data, Assessment and Review (SEDAR) process, a multi-step method for determining the status of fish stocks in the Southeast Region. SEDAR is a multi-step process including: (1) Data/Assessment Workshop, and (2) a series of webinars. The product of the Data/Assessment Workshop is a report which compiles and evaluates potential datasets and recommends which datasets are appropriate for assessment analyses, and describes the fisheries, evaluates the status of the stock, estimates biological benchmarks, projects future population conditions, and recommends research and monitoring needs. Participants for SEDAR Workshops are appointed by the Gulf of Mexico, South Atlantic, and Caribbean Fishery Management Councils and NOAA Fisheries Southeast Regional Office, HMS Management Division, and Southeast Fisheries Science Center. Participants include data collectors and database managers; stock assessment scientists, biologists, and researchers; constituency representatives including fishermen, environmentalists, and NGO's; International experts; and staff of Councils, Commissions, and state and federal agencies.

The items of discussion in the Assessment Process webinars are as follows: Panelists will present summary data, and discuss data needs and treatments.

Although non-emergency issues not contained in this agenda may come before this group for discussion, those issues may not be the subject of formal action during this meeting. Action will be restricted to those issues specifically identified in this notice and any issues arising after publication of this notice that require emergency action under section 305(c) of the Magnuson-Stevens Fishery Conservation and Management Act, provided the public has been notified of the intent to take final action to address the emergency.

Special Accommodations

The meeting is physically accessible to people with disabilities. Requests for sign language interpretation or other auxiliary aids should be directed to the Council office (see **ADDRESSES**) at least 10 business days prior to each workshop.

Note: The times and sequence specified in this agenda are subject to change.

Authority: 16 U.S.C. 1801 *et seq.*

Dated: September 2, 2015.

Tracey L. Thompson,

Acting Deputy Director, Office of Sustainable Fisheries, National Marine Fisheries Service.

[FR Doc. 2015–22539 Filed 9–4–15; 8:45 am]

BILLING CODE 3510–22–P

DEPARTMENT OF COMMERCE

National Oceanic and Atmospheric Administration

RIN 0648–XD978

Takes of Marine Mammals Incidental to Specified Activities; Taking Marine Mammals Incidental to the Rehabilitation of Jetty A at the Mouth of the Columbia River

AGENCY: National Marine Fisheries Service (NMFS), National Oceanic and Atmospheric Administration (NOAA), Commerce.

ACTION: Notice; issuance of an incidental harassment authorization.

SUMMARY: In accordance with the regulations implementing the Marine Mammal Protection Act (MMPA) as amended, notification is hereby given that we have issued an incidental harassment authorization (IHA) to the U.S. Army Corp of Engineers (the Corps) to incidentally harass, by Level B harassment only, six species of marine mammals during activities related to the rehabilitation of Jetty A at the mouth of the Columbia River (MCR).

DATES: This authorization is effective from May 1, 2016 through April 30, 2017.

FOR FURTHER INFORMATION CONTACT: Robert Pauline, Office of Protected Resources, NMFS, (301) 427–8401.

SUPPLEMENTARY INFORMATION:

Availability

An electronic copy of the Corps' application and supporting documents, as well as a list of the references cited in this document, may be obtained by visiting the Internet at: *www.nmfs.noaa.gov/pr/permits/incidental/construction.htm.* In case of problems accessing these documents, please call the contact listed above (see **FOR FURTHER INFORMATION CONTACT**).

Background

Sections 101(a)(5)(A) and (D) of the MMPA (16 U.S.C. 1361 *et seq.*) direct the Secretary of Commerce to allow, upon request, the incidental, but not intentional, taking of small numbers of marine mammals by U.S. citizens who engage in a specified activity (other than commercial fishing) within a specified geographical region if certain findings are made and either regulations are issued or, if the taking is limited to harassment, a notice of a proposed authorization is provided to the public for review.

Authorization for incidental takings shall be granted if NMFS finds that the taking will have a negligible impact on the species or stock(s), will not have an unmitigable adverse impact on the availability of the species or stock(s) for subsistence uses (where relevant), and if the permissible methods of taking and requirements pertaining to the mitigation, monitoring and reporting of such takings are set forth. NMFS has defined ''negligible impact'' in 50 CFR 216.103 as ''. . . an impact resulting from the specified activity that cannot be reasonably expected to, and is not reasonably likely to, adversely affect the species or stock through effects on annual rates of recruitment or survival.''

Section 101(a)(5)(D) of the MMPA established an expedited process by which citizens of the U.S. can apply for an authorization to incidentally take small numbers of marine mammals by harassment. Section 101(a)(5)(D) establishes a 45-day time limit for NMFS' review of an application followed by a 30-day public notice and comment period on any proposed authorizations for the incidental harassment of marine mammals. Within 45 days of the close of the comment period, NMFS must either issue or deny the authorization. Except with respect to certain activities not pertinent here, the MMPA defines ''harassment'' as ''any act of pursuit, torment, or annoyance which (i) has the potential to injure a marine mammal or marine mammal stock in the wild [Level A harassment]; or (ii) has the potential to disturb a marine mammal or marine mammal stock in the wild by causing disruption of behavioral patterns, including, but not limited to, migration, breathing, nursing, breeding, feeding, or sheltering [Level B harassment].''

Summary of Request

On February 13, 2015 NMFS received an application from the Corps for the taking of marine mammals incidental to the rehabilitation of Jetty A at the MCR. On June 9, 2015 NMFS received a revised application. NMFS determined that the application was adequate and complete on June 12, 2015. The Corps proposes to conduct in-water work that may incidentally harass marine mammals (*i.e.,* pile driving and removal). The use of vibratory pile driving is expected to produce underwater sound at levels that have the potential to result in behavioral harassment of marine mammals. Species with the expected potential to be present during the project timeframe include killer whale (*Orcinus orca*), Steller sea lion (*Eumatopius jubatus*), gray whale (*Eschrichtius robustus*), harbor porpoise (*Phocoena phocoena*), California sea lion (*Zalophus californianus*), and harbor seal (*Phoca vitulina richardii*).

Description of the Specified Activity

Overview

The Corps is seeking an IHA for the first year of pile installation and, possibly, removal work at Jetty A related to construction and maintenance of a barge offloading facility. The barge facility will be used for activities associated with the rehabilitation of Jetty A. The Corps is seeking this authorization by the end of August 2015 for contract bid scheduling reasons.

Dates and Duration

Work on the first year of pile installation may begin as early as May 2016 and would extend through September 2017. Because the work may extend to two seasons the Corps has requested a Letter of Authorization (LOA) that would come into effect immediately after the IHA expires for the second year of pile maintenance and removal at Jetty A. The LOA would also

cover rehabilitation work planned for the North and South Jetties.

Specific Geographic Region

This activity will take place at Jetty A at the MCR jetty system in Pacific County, Washington.

Detailed Description of Activities

We provided a description of the proposed action in our **Federal Register** notice announcing the proposed authorization (80 FR 43739; July 23, 2015). Please refer to that document; we provide only summary information here.

The scheduled rehabilitation of Jetty A would occur as part of the Corps' Major Rehabilitation program for the MCR jetty system. During the first year of the project, operators would install and potentially remove up to 24 24-in steel piles and 93 sections of Z or H piles using a vibratory hammer. USACE expects those activities to take 17 days and would limit them to daylight hours only.

Comments and Responses

A notice of NMFS' proposal to issue an IHA was published in the **Federal Register** on July 23, 2015 (80 FR 43739). During the 30-day public comment period, the Marine Mammal Commission submitted a letter. The letter is available on the Internet at *www.nmfs.noaa.gov/pr/permits/incidental/construction.htm.* All comments specific to the Corps' application that address the statutory and regulatory requirements or findings NMFS must make to issue an IHA are addressed in this section of the **Federal Register** notice.

Comment 1: The Commission recommends that a hydroacoustic monitoring plan be incorporated in subsequent years of activity under requested regulations, if and when issued. The Commission believes such a plan is prudent due to the types and sizes of piles to be installed and removed, the substrate of the environment, and the ambient sound and sound propagation loss associated with a river mouth opening into the open ocean.

Response 1: NMFS agrees that a hydroacoustic monitoring plan would be valuable for defining potential injury and harassment zones during future years of the jetty rehabilitation project. There is very limited hydroacoustic data pertaining to the MCR. NMFS will work with the applicant to devise a monitoring plan during the next application cycle.

Description of Marine Mammals in the Area of the Specified Activity

There are six marine mammal species known to occur in the vicinity of the MCR which may be subjected to Level B harassment. These are the killer whale, Steller sea lion, gray whale, harbor porpoise, California sea lion, and harbor seal.

We have reviewed the Corps' detailed species descriptions, including life history information, for accuracy and completeness and refer the reader to Section 3 of the Corps' application as well as the proposed incidental harassment authorization published in the **Federal Register** (80 FR 43739) instead of reprinting the information here. Please also refer to NMFS' Web site (*www.nmfs.noaa.gov/pr/species/mammals*) for generalized species accounts which provide information regarding the biology and behavior of the marine resources that occur in the vicinity of the MCR. We provided additional information for the potentially affected stocks, including details of stock-wide status, trends, and threats, in our **Federal Register** notice of proposed authorization (80 FR 43739).

Table 1 lists marine mammal stocks that could occur in the vicinity of the Jetty A project that may be subject to Level B harassment and summarizes key information regarding stock status and abundance. Taxonomically, we follow Committee on Taxonomy (2014). Please see NMFS' Stock Assessment Reports (SAR), available at *www.nmfs.noaa.gov/pr/sars,* for more detailed accounts of these stocks' status and abundance.

TABLE 1—LIST OF MARINE MAMMAL SPECIES UNDER NMFS JURISDICTION THAT OCCUR IN THE VICINITY OF THE MCR PROJECT AREA *

Species	Stock(s) abundance estimate [1]	ESA status	MMPA * status	Frequency of occurrence [3]
Killer Whale (*Orcinus orca*), *Eastern N. Pacific, Southern Resident Stock.*	85	Endangered	Depleted and Strategic	Infrequent/Rare.
Killer Whale (*Orcinus orca*), *Eastern N. Pacific, West Coast Transient Stock.*	243		Non-depleted	Rare.
Gray Whale (*Eschrichtius robustus*), *Eastern North Pacific Stock, (Pacific Coast Feed Group).*	18,017 (173)	Delisted/Recovered (1994).	Non-depleted	Rare.
Harbor Porpoise (*Phocoena phocoena*), *Northern Oregon/Washington Coast Stock.*	21,487		Non-depleted	Likely.
Steller Sea Lion (*Eumetopias jubatus*), *Eastern U.S. Stock/DPS***.	63,160–78,198	Delisted/Recovered (2013).	Depleted and Strategic [2]	Likely.
California Sea Lion (*Zalophus californianus*), *U.S. Stock.*	296,750		Non-depleted	Likely.
Harbor Seal (*Phoca vitulina richardii*), *Oregon and Washington Stock.*	24,732 [4]		Non-depleted	Seasonal.

[1] *NOAA/NMFS 2014 marine mammal stock assessment reports at http://www.nmfs.noaa.gov/pr/sars/species.htm.*
[2] *May be updated based on the recent delisting status.*
[3] *Frequency defined here in the range of:*
- *Rare—Few confirmed sightings, or the distribution of the species is near enough to the area that the species could occur there.*
- *Infrequent—Confirmed, but irregular sightings.*
- *Likely—Confirmed and regular sightings of the species in the area year-round.*
- *Seasonal—Confirmed and regular sightings of the species in the area on a seasonal basis.*

[4] *Data is 8 years old. No current abundance estimates exist.*
* *MMPA = Marine Mammal Protection Act.*
** *DPS = Distinct population segment.*

Potential Effects of the Specified Activity on Marine Mammals

The **Federal Register** notice of proposed authorization (80 FR 43739), incorporated here by reference, provides a general background on sound relevant to the specified activity as well as a detailed description of marine mammal hearing and of the potential effects of these construction activities on marine mammals.

Anticipated Effects on Habitat

We described potential impacts to marine mammal habitat in detail in our **Federal Register** notice of proposed authorization. In summary, the project activities would not modify existing marine mammal habitat. The activities may cause some fish to leave the area of disturbance, thus temporarily impacting marine mammals' foraging opportunities in a limited portion of the foraging range. Because of the short duration of the activities and the relatively small area of the habitat that may be affected, the impacts to marine mammal habitat are not expected to cause significant or long-term negative consequences for individual marine mammals or their populations

Mitigation

In order to issue an IHA under section 101(a)(5)(D) of the MMPA, NMFS must set forth the permissible methods of taking pursuant to such activity, ''and other means of effecting the least practicable impact on such species or stock and its habitat, paying particular attention to rookeries, mating grounds, and areas of similar significance, and on the availability of such species or stock for taking'' for certain subsistence uses.

Measurements from similar pile driving events were coupled with practical spreading loss to estimate zones of influence (ZOI; see ''Estimated Take by Incidental Harassment''). ZOIs are often used to establish a mitigation zone around each pile (when deemed practicable) to prevent Level A harassment to marine mammals, and also provide estimates of the areas within which Level B harassment might occur. ZOIs may vary between different diameter piles and types of installation methods. The Corps will employ the following mitigation measures:

(a) Conduct briefings between construction supervisors and crews, marine mammal monitoring team, and the Corps' staff prior to the start of all pile driving activity, and when new personnel join the work, in order to explain responsibilities, communication procedures, marine mammal monitoring protocol, and operational procedures.

(b) For in-water heavy machinery work other than pile driving (using, *e.g.,* standard barges, tug boats, barge-mounted excavators, or clamshell equipment used to place or remove material), if a marine mammal comes within 10 m, operations shall cease and vessels shall reduce speed to the minimum level required to maintain steerage and safe working conditions. This type of work could include the following activities: (1) Movement of the barge to the pile location or (2) positioning of the pile on the substrate via a crane (*i.e.,* stabbing the pile).

Monitoring and Shutdown for Pile Driving

The following measures apply to the Corps' mitigation through shutdown and disturbance zones:

Shutdown Zone—For all pile driving activities, the Corps will establish a shutdown zone. Shutdown zones are intended to contain the area in which SPLs equal or exceed the 180/190 dB rms acoustic injury criteria, with the purpose being to define an area within which shutdown of activity would occur upon sighting of a marine mammal (or in anticipation of an animal entering the defined area), thus preventing injury of marine mammals. The estimated shutdown zone for Level A injury to cetaceans would be 1 meter. The Corps, however, would implement a minimum shutdown zone of 10 m radius for all marine mammals around all vibratory pile driving and removal activities. These precautionary measures are intended to further reduce the unlikely possibility of injury from direct physical interaction with construction operations.

Disturbance Zone—Disturbance zones are the areas in which sound pressure levels (SPLs) equal or exceed 120 dB rms (for continuous sound) for pile driving installation and removal. Disturbance zones provide utility for monitoring conducted for mitigation purposes (*i.e.,* shutdown zone monitoring) by establishing monitoring protocols for areas adjacent to the shutdown zones. Monitoring of disturbance zones enables observers to be aware of and communicate the presence of marine mammals in the project area but outside the shutdown zone and thus prepare for potential shutdowns of activity. However, the primary purpose of disturbance zone monitoring is for documenting incidents of Level B harassment. Nominal radial distances for disturbance zones are shown in Table 2. The shutdown zone for Level B injury wound extend 7,356 meters from the sound source. Given the size of the disturbance zone for vibratory pile driving, it is impossible to guarantee that all animals would be observed or to make comprehensive observations of fine-scale behavioral reactions to sound. We discuss monitoring objectives and protocols in greater depth in ''Monitoring and Reporting.''

TABLE 2—CALCULATED AREA ENCOMPASSED WITHIN ZONE OF INFLUENCE AT MCR JETTIES FOR UNDERWATER MARINE MAMMAL SOUND THRESHOLDS AT JETTY A

Jetty	Underwater threshold	Distance—m (mi)	Area excluding land & jetty masses—km² (mi²)
Jetty A: ~ Station 78+50, River Side	Vibratory driving, pinniped injury (190 dB)	0	0
	Vibratory driving, cetacean injury (180 dB)	1 (3.3)	<0.000003 (0.000001)
	Vibratory driving, disturbance (120 dB)	7,356 (4.6 miles)	23.63 (9.12)

Time Restrictions—Work would occur only during daylight hours, when visual monitoring of marine mammals can be conducted. In order minimize impact to Southern resident killer whales, in-water work will not be conducted during their primary feeding season extending from October 1 until on or after May 1. Installation could occur from May 1 through September 30 each year.

In order to document observed incidents of harassment, observers record all marine mammal observations, regardless of location. The observer's location, as well as the location of the pile being driven, is known from a GPS. The location of the animal is estimated as a distance from the observer, which is then compared to the location from the pile and the estimated ZOIs for relevant activities (*i.e.,* pile installation and removal). This information may then be used to extrapolate observed

takes to reach an approximate understanding of actual total takes.

Soft Start—The use of a soft start procedure is believed to provide additional protection to marine mammals by warning or providing a chance to leave the area prior to the hammer operating at full capacity, and typically involves a requirement to initiate sound from the hammer at reduced energy followed by a waiting period. This procedure is repeated two additional times. It is difficult to specify the reduction in energy for any given hammer because of variation across drivers. The project will utilize soft start techniques for all vibratory pile driving. We require the Corps to initiate sound from vibratory hammers for fifteen seconds at reduced energy followed by a thirty-second waiting period, with the procedure repeated two additional times. Soft start will be required at the beginning of each day's pile driving work and at any time following a cessation of pile driving of 20 minutes or longer.

Monitoring

Monitoring Protocols—Monitoring would be conducted before, during, and after pile driving. In addition, observers shall record all incidents of marine mammal occurrence, regardless of distance from activity, and shall document any behavioral reactions in concert with distance from piles being driven. Observations made outside the shutdown zone will not result in shutdown and that pile segment would be completed without cessation, unless the animal approaches or enters the shutdown zone, at which point all pile driving activities would be halted. Monitoring will take place from thirty minutes prior to initiation through thirty minutes post-completion of pile driving activities. Pile driving activities include the time to remove a single pile or series of piles, as long as the time elapsed between uses of the pile driving equipment is no more than thirty minutes.

The following additional measures apply to visual monitoring:

(1) Monitoring will be conducted by qualified observers, who will be placed at the best vantage point(s) practicable to monitor for marine mammals and implement shutdown/delay procedures when applicable by calling for the shutdown to the hammer operator. One observer will be placed on or near the drilling rig near Jetty A while a second observer will be stationed on the opposite side of the observable zone of influence on Clatsop Spit. Qualified observers are trained biologists, with the following minimum qualifications:

(a) Visual acuity in both eyes (correction is permissible) sufficient for discernment of moving targets at the water's surface with ability to estimate target size and distance; use of binoculars may be necessary to correctly identify the target;

(b) Advanced education in biological science or related field (undergraduate degree or higher required);

(c) Experience and ability to conduct field observations and collect data according to assigned protocols (this may include academic experience);

(d) Experience or training in the field identification of marine mammals, including the identification of behaviors;

(e) Sufficient training, orientation, or experience with the construction operation to provide for personal safety during observations;

(f) Writing skills sufficient to prepare a report of observations including but not limited to the number and species of marine mammals observed; dates and times when in-water construction activities were conducted; dates and times when in-water construction activities were suspended to avoid potential incidental injury from construction sound of marine mammals observed within a defined shutdown zone; and marine mammal behavior; and

(g) Ability to communicate orally, by radio or in person, with project personnel to provide real-time information on marine mammals observed in the area as necessary.

(2) Prior to the start of pile driving activity, the shutdown zone will be monitored for 30 minutes to ensure that it is clear of marine mammals. Pile driving will only commence once observers have declared the shutdown zone clear of marine mammals; animals will be allowed to remain in the shutdown zone (*i.e.,* must leave of their own volition) and their behavior will be monitored and documented. The shutdown zone may only be declared clear, and pile driving started, when the entire shutdown zone is visible (*i.e.,* when not obscured by dark, rain, fog, etc.).

If waters exceed a sea-state which restricts the observers' ability to make observations within the marine mammal shutdown zone (*e.g.* excessive wind or fog), pile installation will cease. Pile driving will not be initiated until the entire shutdown zone is visible.

The waters will be scanned 30 minutes prior to commencing pile driving at the beginning of each day, and prior to commencing pile driving after any stoppage of 30 minutes or greater. If marine mammals enter or are observed within the designated marine mammal shutdown zone during or 30 minutes prior to pile driving, the monitors will notify the on-site construction manager to not begin until the animal has moved outside the designated radius.

If any marine mammal species are encountered during activities that are not listed in Table 1 for authorized taking and are likely to be exposed to sound pressure levels (SPLs) greater than or equal to 120 dB re 1mPa (rms), then the Holder of this Authorization must stop pile driving activities and report observations to NMFS' Office of Protected Resources at (301) 847–8401.

If a marine mammal approaches or enters the shutdown zone during the course of vibratory pile driving operations, activity will be halted and delayed until the animal has voluntarily left and been visually confirmed beyond the shutdown zone. If a marine mammal is seen above water and then dives below, the contractor would wait 15 minutes for pinnipeds and 30 minutes for cetaceans. If no marine mammals are seen by the observer in that time it will be assumed that the animal has moved beyond the exclusion zone.

Monitoring will be conducted throughout the time required to drive a pile.

(3) Marine mammal presence within the Level B harassment zone will be monitored, but vibratory driving will not be stopped if marine mammals are found to be present. Any marine mammal documented within the Level B harassment zone during vibratory driving would constitute a Level B take (harassment), and will be recorded and reported as such.

Mitigation Conclusions

We have carefully evaluated the Corps' proposed mitigation measures and considered their effectiveness in past implementation to determine whether they are likely to effect the least practicable impact on the affected marine mammal species and stocks and their habitat. Our evaluation of potential measures included consideration of the following factors in relation to one another: (1) The manner in which, and the degree to which, the successful implementation of the measure is expected to minimize adverse impacts to marine mammals, (2) the proven or likely efficacy of the specific measure to minimize adverse impacts as planned; and (3) the practicability of the measure for applicant implementation.

Any mitigation measure(s) we prescribe should be able to accomplish, have a reasonable likelihood of accomplishing (based on current

science), or contribute to the accomplishment of one or more of the general goals listed below:

(1) Avoidance or minimization of injury or death of marine mammals wherever possible (goals 2, 3, and 4 may contribute to this goal).

(2) A reduction in the number (total number or number at biologically important time or location) of individual marine mammals exposed to stimuli expected to result in incidental take (this goal may contribute to 1, above, or to reducing takes by behavioral harassment only).

(3) A reduction in the number (total number or number at biologically important time or location) of times any individual marine mammal would be exposed to stimuli expected to result in incidental take (this goal may contribute to 1, above, or to reducing takes by behavioral harassment only).

(4) A reduction in the intensity of exposure to stimuli expected to result in incidental take (this goal may contribute to 1, above, or to reducing the severity of behavioral harassment only).

(5) Avoidance or minimization of adverse effects to marine mammal habitat, paying particular attention to the prey base, blockage or limitation of passage to or from biologically important areas, permanent destruction of habitat, or temporary disturbance of habitat during a biologically important time.

(6) For monitoring directly related to mitigation, an increase in the probability of detecting marine mammals, thus allowing for more effective implementation of the mitigation.

Based on our evaluation of the Corps' proposed measures, including information from monitoring of implementation of mitigation measures very similar to those described here under previous IHAs from other marine construction projects, we have determined that the proposed mitigation measures provide the means of effecting the least practicable impact on marine mammal species or stocks and their habitat, paying particular attention to rookeries, mating grounds, and areas of similar significance.

Monitoring and Reporting

In order to issue an IHA for an activity, section 101(a)(5)(D) of the MMPA states that NMFS must set forth ''requirements pertaining to the monitoring and reporting of such taking''. The MMPA implementing regulations at 50 CFR 216.104 (a)(13) indicate that requests for incidental take authorizations must include the suggested means of accomplishing the necessary monitoring and reporting that will result in increased knowledge of the species and of the level of taking or impacts on populations of marine mammals that are expected to be present in the proposed action area.

Any monitoring requirement we prescribe should improve our understanding of one or more of the following:

(1) An increase in the probability of detecting marine mammals, both within the mitigation zone (thus allowing for more effective implementation of the mitigation) and in general to generate more data to contribute to the analyses mentioned below;

(2) An increase in our understanding of how many marine mammals are likely to be exposed to levels of pile driving that we associate with specific adverse effects, such as behavioral harassment, TTS, or PTS;

(3) An increase in our understanding of how marine mammals respond to stimuli expected to result in take and how anticipated adverse effects on individuals (in different ways and to varying degrees) may impact the population, species, or stock (specifically through effects on annual rates of recruitment or survival) through any of the following methods:

- Behavioral observations in the presence of stimuli compared to observations in the absence of stimuli (need to be able to accurately predict received level, distance from source, and other pertinent information);
- Physiological measurements in the presence of stimuli compared to observations in the absence of stimuli (need to be able to accurately predict received level, distance from source, and other pertinent information);
- Distribution and/or abundance comparisons in times or areas with concentrated stimuli versus times or areas without stimuli;

(4) An increased knowledge of the affected species; and

(5) An increase in our understanding of the effectiveness of certain mitigation and monitoring measures.

The Corps consulted with NMFS to create a marine mammal monitoring plan as part of the IHA application for this project.

Visual Marine Mammal Observations

- Two individuals meeting the minimum qualifications previously identified will monitor the marine mammal buffer area and Level B harassment zones during vibratory pile. Monitors will be stationed on the drilling rig or Jetty A as well as on Clatsop Spit.
- During vibratory pile driving, the area within 10 meters of pile driving activity will be monitored and maintained as a marine mammal buffer area in which pile installation will not commence or will be suspended temporarily if any marine mammals are observed within or approaching the area of potential disturbance. The Level B harassment area will be monitored by 2 observers at locations listed above. The monitoring staff will record any presence of marine mammals by species, will document any behavioral responses noted, and record Level B takes when sightings overlap with pile installation activities.
- The individuals will scan the waters within each monitoring zone activity using binoculars (Vector 10X42 or equivalent), spotting scopes (Swarovski 20–60 zoom or equivalent), and visual observation.
- The area within which the Level B harassment thresholds could be exceeded during vibratory pile driving will be monitored for the presence of marine mammals. Marine mammal presence within these zones, if any, will be monitored but pile driving activity will not be stopped if marine mammals were found to be present. Any marine mammal documented within the Level B harassment zone will constitute a Level B take, and will be recorded and used to document the number of take incidents.
- If waters exceed a sea-state which restricts the observers' ability to make observations within the marine mammal buffer zone (*e.g.* excessive wind or fog), pile installation will cease until conditions allow the resumption of monitoring.
- The waters will be scanned for 30 minutes before, during, and 30 minutes after any and all pile driving and removal activities.
- If marine mammals enter or are observed within the designated marine mammal buffer zone (10 m) during or 30 minutes prior to pile driving, the monitors will notify the on-site construction manager to not begin until the animal has moved outside the designated radius.
- If a marine mammal approaches the shutdown zone prior to initiation of pile driving, the Corps cannot commence activities until the marine mammal (a) is observed to have left the Level A harassment zone or (b) has not been seen or otherwise detected within the Level A harassment zone for 30 minutes.
- The waters will continue to be scanned for at least 30 minutes after pile driving has completed each day, and

after each stoppage of 30 minutes or greater.

Data Collection

We require that observers use approved data forms. Among other pieces of information, the Corps will record detailed information about any implementation of shutdowns, including the distance of animals to the pile and description of specific actions that ensued and resulting behavior of the animal, if any. In addition, the Corps will attempt to distinguish between the number of individual animals taken and the number of incidents of take. We require that, at a minimum, the following information be collected on the sighting forms:

- Date and time that monitored activity begins or ends;
- Construction activities occurring during each observation period;
- Weather parameters (*e.g.,* percent cover, visibility);
- Water conditions (*e.g.,* sea state, tide state);
- Species, numbers, and, if possible, sex and age class of marine mammals;
- Description of any observable marine mammal behavior patterns, including bearing and direction of travel and distance from pile driving activity;
- Distance from pile driving activities to marine mammals and distance from the marine mammals to the observation point;
- Locations of all marine mammal observations; and
- Other human activity in the area.

Reporting

The Corps will notify NMFS prior to the initiation of the pile driving activities. The Corps will provide NMFS with a draft monitoring report within 90 days of the conclusion of the proposed construction work. This report will detail the monitoring protocol, summarize the data recorded during monitoring, and estimate the number of marine mammals that may have been harassed. If no comments are received from NMFS within 30 days, the draft final report will constitute the final report. If comments are received, a final report must be submitted within 30 days after receipt of comments.

Estimated Take by Incidental Harassment

Except with respect to certain activities not pertinent here, section 3(18) of the MMPA defines ''harassment'' as: ''. . . any act of pursuit, torment, or annoyance which (i) has the potential to injure a marine mammal or marine mammal stock in the wild [Level A harassment]; or (ii) has the potential to disturb a marine mammal or marine mammal stock in the wild by causing disruption of behavioral patterns, including, but not limited to, migration, breathing, nursing, breeding, feeding, or sheltering [Level B harassment].''

All anticipated takes would be by Level B harassment resulting from vibratory pile driving/removal and involving temporary changes in behavior. Injurious or lethal takes are not expected due to the expected source levels and sound source characteristics associated with the activity, and the planned mitigation and monitoring measures are expected to further minimize the possibility of such take.

Given the many uncertainties in predicting the quantity and types of impacts of sound in every given situation on marine mammals, it is common practice to estimate how many animals are likely to be present within a particular distance of a given activity, or exposed to a particular level of sound, based on the available science.

This practice potentially overestimates the numbers of marine mammals taken for stationary activities, as it is likely that some smaller number of individuals may accrue a number of incidences of harassment per individual than for each incidence to accrue to a new individual, especially if those individuals display some degree of residency or site fidelity and the impetus to use the site (*e.g.,* because of foraging opportunities) is stronger than the deterrence presented by the harassing activity.

The Corps requested authorization for the incidental taking of small numbers of killer whale, Gray whale, harbor porpoise, Steller sea lion, California sea lion, and harbor seal near the MCR project area that may result from vibratory pile driving and removal during construction activities associated with the rehabilitation of Jetty A at the MCR.

In order to estimate the potential incidents of take that may occur incidental to the specified activity, we must first estimate the extent of the sound field that may be produced by the activity and then consider in combination with information about marine mammal density or abundance in the project area. We provided detailed information on applicable sound thresholds for determining effects to marine mammals as well as describing the information used in estimating the sound fields, the available marine mammal density or abundance information, and the method of estimating potential incidences of take, in our **Federal Register** notice of proposed authorization (80 FR 43739; July 23, 2015).

Table 2 above illustrated that during vibratory driving the120 dB Level B harassment threshold could be exceeded at 7,356 meters. Note that the actual area ensonified by pile driving activities is significantly constrained by local topography relative to the identified threshold radii.

The method used for calculating potential exposures to vibratory pile driving noise for each threshold was estimated using local marine mammal data sets, the Biological Opinion, best professional judgment from state and federal agencies, and data from IHA estimates on similar projects with similar actions. All estimates are conservative and include the following assumptions:

- During construction, each species could be present in the project area each day. The potential for a take is based on a 24-hour period. The model assumes that there can be one potential take (Level B harassment exposure) per individual per 24-hours.
- All pilings installed at each site would have an underwater noise disturbance equal to the piling that causes the greatest noise disturbance (*i.e.,* the piling furthest from shore) installed with the method that has the largest ZOI. The largest underwater disturbance ZOI would be produced by vibratory driving steel piles. The ZOIs for each threshold are not spherical and are truncated by land masses which would dissipate sound pressure waves.
- Exposures were based on an estimated 17 days of in-water work.

In absence of site specific underwater acoustic propagation modeling, the practical spreading loss model was used to determine the ZOI.

Southern resident killer whales have been observed offshore near the study area and ZOI, but the Corps does not have fine-scale details on frequency of use. While killer whales do occur in the Columbia River plume, where fresh water from the river intermixes with salt water from the ocean, they are rarely seen in the interior of the Columbia River Jetty system. The ensonified area associated with the proposed action at Jetty A does not extend out into the open ocean where killer whales are likely to be found. Furthermore, the Corps has limited its pile installation window in order to avoid peak salmon runs and any overlap with the presence of Southern residents. To ensure no Level B acoustical harassment occurs, the Corps will restrict pile installation from October 1 until April 30 of each season. However, this restriction was

enacted primarily for construction work at the North and South jetties, where the ensonified zone will radiate out towards the open ocean. As such NMFS is not anticipating any acoustic exposure to Southern residents. Also note that in the 2011 Biological Opinion, NMFS issued a not likely to adversely affect determination. Therefore, NMFS has determined that authorization of take for Southern residents is not warranted.

Western Transient killer whales may be traversing offshore over a greater duration of time than the feeding resident. They are rarely observed inside of the jetty system. The Southwest Fisheries Science Center (SWFSC) stratum model under the Marine Animal Monitor Model provides an estimated density of 0.00070853 animals per km²for summer killer whales for areas near MCR, which may provide a surrogate proxy value for assuming possible densities near the jetties (Barlow *et al.* 2009, Halpin *et al.* 2009 at OBIS–SEAMAP). Given anecdotal evidence (Griffith 2015) and sightings recorded on the OBIS network from surveys done in 2005 (Halpin *et al.* 2009, OBIS–SEAMAP 2015), this density may be appropriate for the MCR vicinity.

The following formula was used to calculate exposure using

Exposure Estimate = $(0.000708_{\text{DensityEstimate}} * 23.63_{\text{ZOI Jetty A}} * 17_{\text{days}}) = 0.28$ killer whale exposures

Where:

$N_{\text{DensityEstimate}}$ = Represents estimated density of species within the 4.6-mile radius (23.63 km²) encompassing the ZOI at Jetty A; using the density model suggested by NOAA (2015), this equates to 0.000708 animals per km²(Barlow *et al.* 2009).

Days = Total days of pile installation or removal activity (~17 days)

Given the low density and rare occurrence of transient killer whales in the ZOI, exposure of feeding or transient killer whales to Level B acoustical harassment from pile driving is unlikely to occur. However, NMFS proposes to authorize take of small number due to the remote chance that transient orcas remain in the vicinity to feed on pinnipeds that frequent the haulouts at the South Jetty.

NMFS believes that an authorized take of 8 transients is warranted because solitary killer whales are rarely observed, and transient whales travel in pods of 2–15 members. NMFS has assumed a pod size of 8.

Based on anecdotal information and sightings between 2006 and 2011 (Halpin *et al.* 2009 at OBIS SEAMAP 2015), gray whales may be in the proximity of the proposed action area and exposed to underwater acoustic disturbances. However, no data exists that is specific to presence and numbers in the MCR vicinity and gray whale density estimates were not available on the SERDP or OBIS–SEAMAP web model sites. Anecdotal evidence also indicates gray whales have been seen at MCR, but are not a common visitor, as they mostly remain in the vicinity of the further offshore shelf-break (Griffith 2015). According to NOAA's Cetacean Mapping classification of the MCR vicinity pertaining to gray whale use, its Biologically Important Area categorization is indicated as a migration corridor (*http://cetsound.noaa.gov/biologically-important-area-map).* As primarily bottom feeders, gray whales are the most coastal of all great whales; they primarily feed in shallow continental shelf waters and live much of their lives within a few tens of kilometers of shore (Barlow et. al. 2009 on OBIS—SEAMAP 2015).

The Pacific Coast Feeding Group or northbound summer migrants would be the most likely gray whales to be in the vicinity of MCR. Since no information pertaining to gray whale densities could be identified, NMFS elected to apply proxy data for estimating densities. As a proxy, data pertinent to humpback whales (0.0039 animals per km²) was selected because both are baleen species found near the MCR vicinity for the same purposes (as a migration route or temporary feeding zone). However, the number of estimated exposures at Jetty A was increased to account for the fact that gray whales are more likely to be in the nearshore environment than humpback whales. This increase was proposed strictly as a conservative assumption to acknowledge the distinct preference gray whales may have over humpbacks for nearshore feeding.

The following formula was used to calculate exposure:

Exposure Estimate = $(0.0039_{\text{DensityEstimate}} * 23.63_{\text{ZOI Jetty A}} * 17_{\text{days}}) + 1 = 1.56$ gray whale exposures

Migrating gray whales often travel in groups of 2, although larger pods do occur. For gray whales, NMFS believes 4 Level B authorized takes is reasonable.

Harbor porpoises are known to occupy shallow, coastal waters and, therefore, are likely to be found in the vicinity of the MCR. They are known to occur within the proposed project area, however, density data for this region is unavailable (Griffith 2015).

The SWFSC stratum model under the Marine Animal Monitor Model provides an estimated density per km² of year-round porpoises for areas near northern California, which may provide a surrogate proxy value for assuming possible densities near the jetties. Though not in the project vicinity, the range of 3.642 animals/km²(Barlow *et al.* 2009, Halpin *et al.* 2009) is a relatively high density compared to values moving even further south along the model boundaries, for which the northern-most extent ends in California. Given anecdotal evidence (Griffith 2015) and sightings recorded on the OBIS network from surveys done between 1989 and 2005, (Halpin *et al.* 2009, OBIS–SEAMAP 2015), this higher density may be appropriate for the MCR vicinity, or may be conservative.

The formula previously described was used to arrive at a take estimate for harbor porpoise.

Exposure Estimate = $(3.642_{\text{DensityEstimate}} * 23.63_{\text{ZOI Jetty A}} * 17_{\text{days}}) = 1{,}464.$

Based on the density model suggested by NOAA (2015), the Corps has provided a very conservative maximum estimate of 1,464 harbor porpoise disturbance exposures over the 17 days of operation. However, this number of potential exposures does not accurately reflect the actual number of animals that would potentially be taken for the MCR jetty project. Rather, it is more likely that the same pod may be exposed more than once during the 17-day operating window. The highest estimated number of animals exposed on any single day based on the modeled proxy density (Barlow *et al.* 2009 at SERDP) and the jetty with the greatest ZOI is 193 animals (from South Jetty Channel). While the number of pods in the vicinity of the MCR is unknown, the size of the pods is usually assumed to be significantly smaller than 193 animals. According to OBIS–SEAMAP (2015 and Halpin *et al.* 2009), the normal range of group size generally consists of less than five or six individuals, though aggregations into large, loose groups of 50 to several hundred animals could occur for feeding or migration. Because the ZOI only extends for a maximum of 7,256 meters (4.6 miles), it may also be assumed that due to competition and territorial circumstances only a limited number of pods would be feeding in the ZOI at any particular time. If the modeled density calculations are assumed, then this means anywhere from 32 small pods to 2 large, 100-animal pods might be feeding during every day of pile installation. Given these values seem an unrealistic representation of use and pod densities

within any one of the ZOIs, NMFS is proposing an alternative calculation.

NMFS conservatively assumed that a single, large feeding pod of 50 animals forms within the ZOI for Jetty A on each day of pile installation. Though this is likely much higher than actual use by multiple pods in the vicinity, it more realistically represents a worst-case scenario for the number of animals that could potentially be affected by the proposed work. This calculation also assumes that it is a new pod of individuals would be affected on each installation day, which is also unlikely given pod residency. Therefore, NMFS is permitting a Level B take for 850 animals.

There are haulout sites on the South Jetty used by pinnipeds, especially Steller sea lions. It is likely that pinnipeds that use the haulout area in would be exposed to 120 dB threshold acoustic threshold during pile driving activities. The number of exposures would vary based on weather conditions, season, and daily fluctuations in abundance. Based on a survey by the Washington Department of Fish & Wildlife (WDFW) the number of affected Steller sea lions could be between 200–800 animals per month; California sea lion numbers could range from 1 to 500 per month and the number of harbor seals could be as low as 1 to as high as 57 per month. Exposure and take estimates below are based on past pinniped data from WDFW (2000–2014 data), which had a more robust monthly sampling frequency relative to Oregon Department of Fish &Wildlife (ODFW) counts. The exception to this was for harbor seal counts, for which ODFW (also 2000–2014 data) had more sampling data in certain months. Therefore, ODFW harbor seal data was used for the months of May and July. Exposure estimates are much higher than take estimates. This is because unlike the exposure estimate which assumes all new individuals, the take estimate request assumes that some of the same individuals will remain in the area and be exposed multiple times during the short 17-day installation period to complete and remove each offloading facility (for a total of about 68 days). NMFS examined the estimated monthly average number of animals from 2000–2014 hauled on South Jetty during May and June, which are the most likely months for pile installation as is shown in Table 3. There are no anticipated airborne exposures since the main haul out sites are not in close proximity to Jetty A. Note that the formula used by NMFS is different than that employed by the Corps in their application as NMFS is only analyzing potential impacts associated with Jetty A. To reiterate, these exposure estimates assume a new individual is exposed every day throughout each acoustic disturbance, for the entire duration of the project.

Exposure $\text{Estimate}_{\text{Stellar}} = (N_{\text{est(May + June/2)}} * 17_{\text{underwater/piles days}}) = 12{,}750$ Steller sea lions

Exposure $\text{Estimate}_{\text{California}} = (N_{\text{est(May + June/2)}} * 17_{\text{underwater/piles days}}) = 2{,}788$ CA sea lions

Exposure $\text{Estimate}_{\text{Harbor}} = (N_{\text{est(May + June/2)}} * 17_{\text{underwater/piles days}}) = 493$ Harbor porpoises

Where:

N_{est} = Estimated daily average number of animals for May and June hauled out at South Jetty based on WDFW data.

Duration = total days of pile installation or removal activity for underwater thresholds (17);

TABLE 3—AUTHORIZED TAKES OF PINNIPEDS DURING PILE INSTALLATION AT JETTY A

Month	Steller sea lion	California sea lion	Harbor seal
	Avg [1] #	Avg [1] #	Avg [1 2] #
April	587	99	.....
May	824	125	0
June	676	202	57
July	358	1	10
August	324	115	1
September	209	249	.....
October	384	508	.....
Avg Daily Count (May+June/2) [3]	750	164	29
Total Exposures over Duration [4] (17 days)	12,750	2,788	493

[1] WDFW average daily count per month from 2000–2014.
[2] ODFW average daily count per month for May and July 2000–2014 due to additional available sampling data.
[3] Conservatively assumes each exposure is to new individual, all individuals are new arrivals each month, and no individual is exposed more than one time.
[4] Assumed 17 pile installation/removal days.

Analyses and Determinations

Negligible Impact Analysis

Negligible impact is ''an impact resulting from the specified activity that cannot be reasonably expected to, and is not reasonably likely to, adversely affect the species or stock through effects on annual rates of recruitment or survival'' (50 CFR 216.103). A negligible impact finding is based on the lack of likely adverse effects on annual rates of recruitment or survival (*i.e.,* population-level effects). An estimate of the number of Level B harassment takes, alone, is not enough information on which to base an impact determination. In addition to considering estimates of the number of marine mammals that might be ''taken'' through behavioral harassment, NMFS must consider other factors, such as the likely nature of any responses (their intensity, duration, etc.), the context of any responses (critical reproductive time or location, migration, etc.), as well as the number and nature of estimated Level A harassment takes, the number of estimated mortalities, effects on habitat, and the status of the species.

To avoid repetition, the discussion of our analyses applies to all the species listed in Table 4 given that the anticipated effects of this pile driving project on marine mammals are expected to be relatively similar in nature. There is no information about the size, status, or structure of any species or stock that would lead to a different analysis for this activity, else species-specific factors would be identified and analyzed.

Pile driving activities associated with the rehabilitation of Jetty A at the mouth of the Columbia River, as outlined

previously, have the potential to disturb or displace marine mammals. Specifically, the planned activities may result in take, in the form of Level B harassment (behavioral disturbance) only, from underwater sounds generated from pile driving. Potential takes could occur if individuals of these species are present in the ensonified zone when pile driving is happening.

No injury, serious injury, or mortality is anticipated given the nature of the activity and measures designed to minimize the possibility of injury to marine mammals. The potential for these outcomes is minimized through the construction method and the implementation of the planned mitigation measures. Specifically, vibratory hammers will be the only method of installation utilized. No impact driving is planned. Vibratory driving does not have significant potential to cause injury to marine mammals due to the relatively low source levels produced (site-specific acoustic monitoring data show no source level measurements above 180 dB rms) and the lack of potentially injurious source characteristics. The likelihood that marine mammal detection ability by trained observers is high under the environmental conditions described for the rehabilitation of Jetty A at MCR further enables the implementation of shutdowns to avoid injury, serious injury, or mortality.

The Corps' proposed activities are localized and of short duration. The entire project area is limited to the Jetty A area and its immediate surroundings. Actions covered under the Authorization would include installing a maximum of 24 piles for use as dolphins and a maximum of 93 sections of Z or H piles for retention of rock fill over 17 days. The piles would be a maximum diameter of 24 inches and would only be installed by vibratory driving method. The possibility exists that smaller diameter piles may be used but for this analysis it is assumed that 24 inch piles will be driven.

These localized and short-term noise exposures may cause brief startle reactions or short-term behavioral modification by the animals. These reactions and behavioral changes are expected to subside quickly when the exposures cease. Moreover, the proposed mitigation and monitoring measures are expected to reduce potential exposures and behavioral modifications even further. Additionally, no important feeding and/or reproductive areas for marine mammals are known to be near the proposed action area. Therefore, the take resulting from the proposed project is not reasonably expected to and is not reasonably likely to adversely affect the marine mammal species or stocks through effects on annual rates of recruitment or survival.

The project also is not expected to have significant adverse effects on affected marine mammals' habitat, as analyzed in detail in the ''Anticipated Effects on Marine Mammal Habitat'' section. The project activities would not modify existing marine mammal habitat. The activities may cause some fish to leave the area of disturbance, thus temporarily impacting marine mammals' foraging opportunities in a limited portion of the foraging range; but, because of the short duration of the activities and the relatively small area of the habitat that may be affected, the impacts to marine mammal habitat are not expected to cause significant or long-term negative consequences.

Effects on individuals that are taken by Level B harassment, on the basis of reports in the literature as well as monitoring from other similar activities, will likely be limited to reactions such as increased swimming speeds, increased surfacing time, or decreased foraging (if such activity were occurring) (*e.g.,* Thorson and Reyff, 2006; Lerma, 2014). Most likely, individuals will simply move away from the sound source and be temporarily displaced from the areas of pile driving, although even this reaction has been observed primarily only in association with impact pile driving. In response to vibratory driving, pinnipeds (which may become somewhat habituated to human activity in industrial or urban waterways) have been observed to orient towards and sometimes move towards the sound. The pile driving activities analyzed here are similar to, or less impactful than, numerous construction activities conducted in other similar locations, which have taken place with no reported injuries or mortality to marine mammals, and no known long-term adverse consequences from behavioral harassment. Repeated exposures of individuals to levels of sound that may cause Level B harassment are unlikely to result in hearing impairment or to significantly disrupt foraging behavior. Thus, even repeated Level B harassment of some small subset of the overall stock is unlikely to result in any significant realized decrease in fitness for the affected individuals, and thus would not result in any adverse impact to the stock as a whole. Level B harassment will be reduced to the level of least practicable impact through use of mitigation measures described herein and, if sound produced by project activities is sufficiently disturbing, animals are likely to simply avoid the project area while the activity is occurring.

In summary, this negligible impact analysis is founded on the following factors: (1) The possibility of injury, serious injury, or mortality may reasonably be considered discountable; (2) the anticipated incidents of Level B harassment consist of, at worst, temporary modifications in behavior and; (3) the presumed efficacy of the proposed mitigation measures in reducing the effects of the specified activity to the level of least practicable impact. In combination, we believe that these factors, as well as the available body of evidence from other similar activities, demonstrate that the potential effects of the specified activity will have only short-term effects on individuals. The specified activity is not expected to impact rates of recruitment or survival and will therefore not result in population-level impacts.

Based on the analysis contained herein of the likely effects of the specified activity on marine mammals and their habitat, and taking into consideration the implementation of the proposed monitoring and mitigation measures, NMFS finds that the total marine mammal take from the Corps' rehabilitation of Jetty A at MCR will have a negligible impact on the affected marine mammal species or stocks.

TABLE 4—ESTIMATED PERCENTAGE OF SPECIES/STOCKS THAT MAY BE EXPOSED TO LEVEL B HARASSMENT

Species	Total proposed authorized takes	Abundance	Percentage of total stock
Killer whale (Western transient stock)	8	243	3.2
Gray whale (Eastern North Pacific Stock)	4	18,017	<0.01
Harbor porpoise	850	21,487	3.9

TABLE 4—ESTIMATED PERCENTAGE OF SPECIES/STOCKS THAT MAY BE EXPOSED TO LEVEL B HARASSMENT—Continued

Species	Total proposed authorized takes	Abundance	Percentage of total stock
Steller sea lion	12,750	63,160–78,198	20.2–16.3–1.0
California sea lion	2,788	296,750	0.01
Harbor seal	493	24,732	2.0

Small Numbers Analysis

Table 4 illustrates the number of animals that could be exposed to received noise levels that could cause Level B behavioral harassment for the proposed work associated with the rehabilitation of Jetty A at MCR. The analyses provided above represents between <0.01%—20.9% of the populations of these stocks that could be affected by Level B behavioral harassment. The numbers of animals authorized to be taken for all species would be considered small relative to the relevant stocks or populations even if each estimated taking occurred to a new individual—an extremely unlikely scenario. For pinnipeds occurring in the vicinity of Jetty A, there will almost certainly be overlap in individuals present day-to-day, and these takes are likely to occur only within some small portion of the overall regional stock.

Based on the analysis contained herein of the likely effects of the specified activity on marine mammals and their habitat, and taking into consideration the implementation of the mitigation and monitoring measures, which are expected to reduce the number of marine mammals potentially affected by the proposed action, NMFS finds that small numbers of marine mammals will be taken relative to the populations of the affected species or stocks.

Impact on Availability of Affected Species for Taking for Subsistence Uses

There are no subsistence uses of marine mammals in the proposed project area; and, thus, no subsistence uses impacted by this action.

Endangered Species Act (ESA)

There are two marine mammal species that are listed as endangered under the ESA with confirmed or possible occurrence in the study area: humpback whale and Southern resident killer whale. For the purposes of this IHA, NMFS determined that take of Southern resident killer whales was highly unlikely given the rare occurrence of these animals in the project area. A similar conclusion was reached for humpback whales. On March 18, 2011, NMFS signed a Biological Opinion concluding that the proposed action is not likely to jeopardize the continued existence of humpback whales and may affect, but is not likely to adversely affect Southern resident killer whales.

National Environmental Policy Act (NEPA)

The Corps issued the *Final Environmental Assessment Columbia River at the Mouth, Oregon and Washington Rehabilitation of the Jetty System at the Mouth of the Columbia River* and *Finding of No Significant Impact* in 2011. The environmental assessment (EA) and finding of no significant interest (FONSI) were revised in 2012 with a FONSI being signed on July 26, 2012. NMFS has adopted the findings of the 2012 FONSI.

Authorization

As a result of these determinations, we have issued an IHA to the Corps for conducting the described activities related to the rehabilitation of Jetty A at the MCR from May 1, 2016 through April 30, 2017 provided the previously described mitigation, monitoring, and reporting requirements are incorporated.

Dated: September 1, 2015.

Perry Gayaldo,

Deputy Director, Office of Protected Resources, National Marine Fisheries Service.

[FR Doc. 2015–22069 Filed 9–4–15; 8:45 am]

BILLING CODE 3510–22–P

DEPARTMENT OF DEFENSE

Office of the Secretary

[Docket ID: DoD–2015–OS–0090]

Defense Personal Property Program (DP3)

AGENCY: United States Transportation Command (USTRANSCOM), DoD.

ACTION: Notice.

SUMMARY: DoD has developed a Concept of Operations (CONOPS) to test expansion of the personal property volume move criteria to include select high-volume channel/traffic lanes. Under the pilot test, personal property shipments will be awarded both directions (to/from) by the responsible origin/destination Joint Personal Property Shipping Office (JPPSO) on the participating pilot lanes. The CONOPS was developed utilizing general traffic management principles in concert with the Defense Transportation Regulation (DTR) Part IV (DTR 4500.9R), and Government household goods tariff (400NG) (as amended).

DATES: Comments must be received on or before November 9, 2015.

ADDRESSES: Do not submit comments directly to the point of contact under **FOR FURTHER INFORMATION CONTACT** or mail your comments to any address other than what is shown in this section. Doing so will delay the posting of the submission. You may submit comments, identified by docket number and title, by any of the following methods:

- Federal eRulemaking Portal: *http://www.regulations.gov.* Follow the instructions for submitting comments.
- Mail: Department of Defense, Office of the Deputy Chief Management Officer, Directorate of Oversight and Compliance, Regulatory and Audit Matters Office, 9010 Defense Pentagon, Washington, DC 20301–9010.

Instructions: All submissions received must include the agency name and docket number for this **Federal Register** document. The general policy for comments and other submissions from members of the public is to make these submissions available for public viewing on the Internet at *http://www.regulations.gov* as they are received without change, including any personal identifiers or contact information.

FOR FURTHER INFORMATION CONTACT: Mr. Jim Teague, United States Transportation Command, TCJ5/4–PI, 508 Scott Drive, Scott Air Force Base, IL 62225–5357; (618) 220–4803.

SUPPLEMENTARY INFORMATION: The pilot test CONOPS is available for review and comment on the USTRANSCOM Web site at *http://www.transcom.mil/dtr/coord/coordpartivfrn.cfm.* Request comments be submitted using the downloadable comment-matrix-format posted with the CONOPS. In furtherance of DoD's goal to develop

and implement an efficient personal property program to facilitate quality movements for our military members and civilian employees, all business rules are developed in concert with the Military Services and Surface Deployment and Distribution Command.

Any subsequent modification(s) to the business rules will be published in the **Federal Register** and incorporated into the Defense Transportation Regulation (DTR) Part IV (DTR 4500.9R). The Government shall comply with the Small Business Act, 15 U.S.C. 644(a). These program requirements do not impose a legal requirement, obligation, sanction or penalty on the public sector, and will not have an economic impact of $100 million or more.

Additional Information

A complete version of the DTR is available via the Internet on the USTRANSCOM homepage at *http://www.transcom.mil/dtr/part-iv/.*

Dated: September 2, 2015.

Aaron Siegel,

Alternate OSD Federal Register Liaison Officer, Department of Defense.

[FR Doc. 2015–22524 Filed 9–4–15; 8:45 am]

BILLING CODE 5001–06–P

DEPARTMENT OF DEFENSE

Office of the Secretary

Uniform Formulary Beneficiary Advisory Panel; Notice of Federal Advisory Committee Meeting

AGENCY: Assistant Secretary of Defense (Health Affairs), DoD.

ACTION: Notice of meeting.

SUMMARY: The Department of Defense is publishing this notice to announce a Federal Advisory Committee meeting of the Uniform Formulary Beneficiary Advisory Panel (hereafter referred to as the Panel).

DATES: Wednesday, September 30, 2015, from 9 a.m. to 1 p.m.

ADDRESSES: Naval Heritage Center Theater, 701 Pennsylvania Avenue NW., Washington, DC 20004.

FOR FURTHER INFORMATION CONTACT: CAPT Edward Norton, DFO, Uniform Formulary Beneficiary Advisory Panel, 7700 Arlington Boulevard, Suite 5101, Falls Church, VA 22042–5101. Telephone: (703) 681–2890. Fax: (703) 681–1940. Email Address: *dha.ncr.health-it.mbx.baprequests@mail.mil.*

SUPPLEMENTARY INFORMATION: This meeting is being held under the provisions of the Federal Advisory Committee Act of 1972 (Title 5, United States Code (U.S.C.), Appendix, as amended) and the Government in the Sunshine Act of 1976 (5 U.S.C. 552b, as amended).

Purpose of Meeting: The Panel will review and comment on recommendations made to the Director of Defense Health Agency, by the Pharmacy and Therapeutics Committee, regarding the Uniform Formulary.

Meeting Agenda

1. Sign-In
2. Welcome and Opening Remarks
3. Public Citizen Comments
4. Scheduled Therapeutic Class Reviews (Comments will follow each agenda item)
   a. Diabetes Non-Insulin (GLP–1 Receptor Agonists)
   b. Diabetes Non-Insulin (SGLT–2 Inhibitors)
   c. Narcotics Analgesics—Long Acting
   d. Oral Oncological Agents—CML Drugs
5. Designated Newly Approved Drugs in Already-Reviewed Classes
6. Pertinent Utilization Management Issues
7. Panel Discussions and Vote

Meeting Accessibility: Pursuant to 5 U.S.C. 552b, as amended, and 41 Code of Federal Regulations (CFR) 102–3.140 through 102–3.165, and the availability of space, this meeting is open to the public. Seating is limited and will be provided only to the first 220 people signing-in. All persons must sign-in legibly.

Administrative Work Meeting: Prior to the public meeting, the Panel will conduct an Administrative Work Meeting from 8 a.m. to 9 a.m. to discuss administrative matters of the Panel. The Administrative Work Meeting will be held at the Naval Heritage Center, 701 Pennsylvania Avenue NW., Washington, DC 20004. Pursuant to 41 CFR 102–3.160, the Administrative Work Meeting will be closed to the public.

Written Statements: Pursuant to 41 CFR 102–3.140, the public or interested organizations may submit written statements to the membership of the Panel at any time or in response to the stated agenda of a planned meeting. Written statements should be submitted to the Panel's Designated Federal Officer (DFO). The DFO's contact information can be obtained from the General Services Administration's Federal Advisory Committee Act Database at *http://facadatabase.gov/.*Written statements that do not pertain to the scheduled meeting of the Panel may be submitted at any time. However, if individual comments pertain to a specific topic being discussed at a planned meeting, then these statements must be submitted no later than 5 business days prior to the meeting in question. The DFO will review all submitted written statements and provide copies to all the committee members.

Public Comments: In addition to written statements, the Panel will set aside 1 hour for individuals or interested groups to address the Panel. To ensure consideration of their comments, individuals and interested groups should submit written statements as outlined in this notice; but if they still want to address the Panel, then they will be afforded the opportunity to register to address the Panel. The Panel's DFO will have a ''Sign-Up Roster'' available at the Panel meeting for registration on a first-come, first-serve basis. Those wishing to address the Panel will be given no more than 5 minutes to present their comments, and at the end of the 1 hour time period, no further public comments will be accepted. Anyone who signs-up to address the Panel, but is unable to do so due to the time limitation, may submit their comments in writing; however, they must understand that their written comments may not be reviewed prior to the Panel's deliberation.

To ensure timeliness of comments for the official record, the Panel encourages that individuals and interested groups consider submitting written statements instead of addressing the Panel.

Dated: September 1, 2015.

Aaron Siegel,

Alternate OSD Federal Register Liaison Officer, Department of Defense.

[FR Doc. 2015–22068 Filed 9–4–15; 8:45 am]

BILLING CODE 5001–06–P

DEPARTMENT OF EDUCATION

President's Board of Advisors on Historically Black Colleges and Universities

AGENCY: President's Board of Advisors on Historically Black Colleges and Universities, Office of Undersecretary, U.S. Department of Education.

ACTION: Announcement of an open meeting.

SUMMARY: This notice sets forth the agenda for the September 23, 2015, meeting of the President's Board of Advisors on Historically Black Colleges and Universities (PBA) and provides information to members of the public on submitting written comments and on the process as to how to request time to

make oral comments at the meeting. The notice also describes the functions of the Board. Notice of the meeting is required by § 10(a)(2) of the Federal Advisory Committee Act and intended to notify the public of its opportunity to attend.

DATES: The PBA meeting will be held on September 23, 2015, from 9 a.m. to 1 p.m. E.D.T. at the Washington Marriott Wardman Park, 2660 Woodley Road NW., Washington, DC 20008, in the Wilson Rooms (Mezzanine Level).

ADDRESSES: U.S. Department of Education, White House Initiative on Historically Black Colleges and Universities, 400 Maryland Avenue SW., Washington, DC 20202.

FOR FURTHER INFORMATION CONTACT: Sedika Franklin, Program Specialist, U.S. Department of Education, White House Initiative on Historically Black Colleges and Universities, 400 Maryland Avenue SW., Washington, DC 20204; telephone: (202) 453–5634 or (202) 453–5630, fax: (202) 453–5632, or email *sedika.franklin@ed.gov.*

SUPPLEMENTARY INFORMATION:

PBA's Statutory Authority and Function: The President's Board of Advisors on Historically Black Colleges and Universities (the Board) is established by Executive Order 13532 (February 26, 2010) and subsequently continued by Executive Order 13652, which was signed by the President on September 30, 2013. The Board is governed by the provisions of the Federal Advisory Committee Act (FACA), (Pub.L 92–463; as amended, 5 U.S.C.A., Appendix 2) which sets forth standards for the formation and use of advisory committees. The purpose of the Board is to advise the President and the Secretary of Education (Secretary) on all matters pertaining to strengthening the educational capacity of Historically Black Colleges and Universities (HBCUs).

The Board shall advise the President and the Secretary in the following areas: (i) Improving the identity, visibility, and distinctive capabilities and overall competitiveness of HBCUs; (ii) engaging the philanthropic, business, government, military, homeland-security, and education communities in a national dialogue regarding new HBCU programs and initiatives; (iii) improving the ability of HBCUs to remain fiscally secure institutions that can assist the nation in reaching its goal of having the highest proportion of college graduates by 2020; (iv) elevating the public awareness of HBCUs; and (v) encouraging public-private investments in HBCUs.

Meeting Agenda: In addition to its review of activities prior to September 23, 2015, the meeting agenda will include Chairman William R. Harvey's report on HBCU issues and concerns; Acting Executive Director, Ivory A. Toldson will provide an update on current priorities of the White House Initiative on HBCUs to include planning strategies and initiatives beyond the 2015 HBCU Week Conference and an update on the 2014 Report to the President on the Results of the Participation of Historically Black Colleges and Universities in Federal Programs; David Johns, Executive Director of the White House Initiative on Educational Excellence for African Americans will discuss the joint meeting requirement for the President's Advisory Commission on Educational Excellence for African Americans and the Board; and Chairman Harvey will lead a conversation regarding the re-focus of Board subcommittees.

Below is a list of agencies, invited to provide updates on fiscal year 2015 activities and outreach during the September 23, 2015 meeting:

- National Science Foundation
- U.S. Department of Transportation
- U.S. Department of Agriculture
- U.S. Social Security Administration

Submission of requests to make an oral comment: There are two methods the public may use to make an oral comment at the September 23, 2015 meeting.

Method One: Submit a request by email to the *whirsvps@ed.gov* mailbox. Please do not send material directly to PBA members. Requests must be received by September 17, 2015. Include in the subject line of the email request ''Oral Comment Request: (organization name).'' The email must include the name(s), title, organization/affiliation, mailing address, email address, telephone number, of the person(s) requesting to speak, and a brief summary (not to exceed one page) of the principal points to be made during the oral presentation. All individuals submitting an advance request in accordance with this notice will be afforded an opportunity to speak for three minutes.

Method Two: Register at the meeting location on September 23, 2015, to make an oral comment during the PBA's deliberations concerning Historically Black Colleges and Universities. The requestor must provide his or her name, title, organization/affiliation, mailing address, email address, and telephone number. Individuals will be selected on a first-come, first-served basis. If selected, each commenter will have an opportunity to speak for three minutes.

All oral comments made will become part of the official record of the Board. Similarly, written materials distributed during oral presentations will become part of the official record of the meeting.

Submission of written public comments: The Board invites written comments, which will be read during the Public Comment segment of the agenda. Comments must be received by September 17, 2015, in the *whirsvps@ed.gov* mailbox, include in the subject line ''Written Comments: Public Comment''. The email must include the name(s), title, organization/affiliation, mailing address, email address, and telephone number, of the person(s) making the comment. Comments should be submitted as a Microsoft Word document or in a medium compatible with Microsoft Word (not a PDF file) that is attached to an electronic mail message (email) or provided in the body of an email message. Please do not send material directly to the PBA members.

Access to Records of the Meeting: The Department will post the official report of the meeting on the PBA Web site 90 days after the meeting. Pursuant to the Federal Advisory Committee Act (FACA), the public may also inspect the materials at 400 Maryland Avenue SW., Washington, DC, by emailing *oswhi-hbcu@ed.gov* or by calling (202) 453–5634 to schedule an appointment.

Reasonable Accommodations: The meeting site is accessible to individuals with disabilities. If you will need an auxiliary aid or service to participate in the meeting (*e.g.*, interpreting service, assistive listening device, or materials in an alternate format), notify the contact person listed in this notice at least one week before the meeting date. Although we will attempt to meet a request received after that date, we may not be able to make available the requested auxiliary aid or service because of insufficient time to arrange it.

Electronic Access to this Document: The official version of this document is the document published in the **Federal Register**. Free Internet access to the official edition of the **Federal Register** and the Code of Federal Regulations is available via the Federal Digital System at: *www.gpo.gov/fdsys.* At this site you can view this document, as well as all other documents of this Department published in the **Federal Register**, in text or Adobe Portable Document Format (PDF). To use PDF, you must have Adobe Acrobat Reader, which is available free at the site. You may also access documents of the Department published in the **Federal Register** by using the article search feature at: *www.federalregister.gov.* Specifically, through the advanced search feature at

this site, you can limit your search to documents published by the Department.

Authority: Presidential Executive Order 13532, continued by Executive Order 13652.

Ted Mitchell,

Under Secretary.

[FR Doc. 2015–22541 Filed 9–4–15; 8:45 am]

BILLING CODE P

DEPARTMENT OF ENERGY

Environmental Management Advisory Board Meeting

AGENCY: Department of Energy.

ACTION: Notice of open meeting.

SUMMARY: This notice announces a meeting of the Environmental Management Advisory Board (EMAB). The Federal Advisory Committee Act (Pub. L. 92–463, 86 Stat. 770) requires that public notice of this meeting be announced in the **Federal Register**.

DATES: Wednesday, September 30, 2015, 1 p.m.–5 p.m.

ADDRESSES: The Key Bridge Marriott, 1404 Lee Highway, Arlington, Virginia 22209.

FOR FURTHER INFORMATION CONTACT: Kristen G. Ellis, Designated Federal Officer, EMAB (EM–3.2), U.S. Department of Energy, 1000 Independence Avenue SW., Washington, DC 20585. Phone (202) 586–5810; fax (202) 586–0293 or email: *kristen.ellis@em.doe.gov.*

SUPPLEMENTARY INFORMATION: *Purpose of the Board:* The purpose of EMAB is to provide the Assistant Secretary for Environmental Management (EM) with advice and recommendations on corporate issues confronting the EM program. EMAB contributes to the effective operation of the program by providing individual citizens and representatives of interested groups an opportunity to present their views on issues facing EM and by helping to secure consensus recommendations on those issues.

Tentative Agenda Topics:

- EM Program Update and Discussion of Board Work Plans

Public Participation: EMAB welcomes the attendance of the public at its advisory committee meetings and will make every effort to accommodate persons with physical disabilities or special needs. If you require special accommodations due to a disability, please contact Kristen G. Ellis at least seven days in advance of the meeting at the phone number or email address listed above. Written statements may be filed with the Board either before or after the meeting. Individuals who wish to make oral statements pertaining to the agenda should contact Kristen G. Ellis at the address or telephone number listed above. Requests must be received five days prior to the meeting and reasonable provision will be made to include the presentation in the agenda. The Designated Federal Officer is empowered to conduct the meeting in a fashion that will facilitate the orderly conduct of business. Individuals wishing to make public comments will be provided a maximum of five minutes to present their comments.

Minutes: Minutes will be available by writing or calling Kristen G. Ellis at the address or phone number listed above. Minutes will also be available at the following Web site: *http://energy.gov/em/services/communication-engagement/environmental-management-advisory-board-emab.*

Issued at Washington, DC.

LaTanya R. Butler,

Deputy Committee Management Officer.

[FR Doc. 2015–22534 Filed 9–4–15; 8:45 am]

BILLING CODE 6450–01–P

DEPARTMENT OF ENERGY

Office of Energy Efficiency and Renewable Energy

Proposed Agency Information Collection Extension

AGENCY: Office of Energy Efficiency and Renewable Energy, U.S. Department of Energy (DOE).

ACTION: Notice and request for comments.

SUMMARY: The Department of Energy pursuant to the Paperwork Reduction Act of 1995, intends to extend for three years an information collection request with the Office of Management and Budget. Comments are invited on: (a) Whether the extended collection of information is necessary for the proper performance of the functions of DOE, including whether the information shall have practical utility; (b) the accuracy of DOE's estimate of the burden of the proposed collection of information, including the validity of the methodology and assumptions used; (c) ways to enhance the quality, utility, and clarity of the information to be collected; and (d) ways to minimize the burden of the collection of information on respondents, including through the use of automated collection techniques or other forms of information technology.

DATES: Comments regarding this proposed information collection must be received on or before November 9, 2015. If you anticipate difficulty in submitting comments within that period, contact the person listed below as soon as possible.

ADDRESSES: Written comments should be sent to: Desk Officer for the Department of Energy, Office of Information and Regulatory Affairs, Office of Management and Budget, New Executive Office Building, Room 10102, 735 17th Street NW., Washington, DC 20503. And to Mr. Dennis Smith, Office of Energy Efficiency and Renewable Energy (EE–3V), U.S. Department of Energy, 1000 Independence Avenue SW., Washington, DC 20585–0121, or by fax at 202–586–1600, or by email at *Dennis.Smith@ee.doe.gov.*

FOR FURTHER INFORMATION CONTACT: Mr. Dennis Smith at the address listed above in **ADDRESSES**.

SUPPLEMENTARY INFORMATION: DOE is proposing to extend an information collection pursuant to the Paperwork Reduction Act of 1995. The approved collection is being used for two Clean Cities programmatic efforts. The first is related to a scorecard that assists DOE's Clean Cities coalitions and stakeholders in assessing the level of readiness of their communities for plug-in electric vehicles (PEV). The second effort is intended to develop information that enables DOE to measure the impact and progress of DOE's National Clean Fleets Partnership (Partnership). DOE is not proposing to expand the scope of these information collection efforts.

This information collection request contains: (1) OMB No. 1910–5171; (2) Information Collection Request Title: Clean Cities Vehicle Programs; (3) Type of Review: Renewal; (4) Purpose: DOE's Clean Cities initiative has developed two voluntary mechanisms by which communities and certain fleets can get a better understanding of their readiness to deploy alternative fuel vehicles and their progress in doing so. The voluntary PEV Scorecard is intended to assist its coalitions and stakeholders in assessing the level of readiness of their communities for plug-in electric vehicles. The principal objective of the scorecard is to provide respondents with an objective assessment and estimate of their respective community's readiness for PEV deployment as well as understand the respective community's commitment to deploying these vehicles successfully. DOE intends the scorecard to be completed by a city/county/regional sustainability or energy coordinator. As the intended respondent may not be aware of every aspect of

local or regional PEV readiness, coordination among local stakeholders to gather appropriate information may be necessary.

DOE expects a total respondent population of approximately 1,250 respondents. Selecting the multiple choice answers in completing a scorecard questionnaire is expected to take under 30 minutes, although additional time of no more than 20 hours may be needed to assemble information necessary to be able to answer the questions, leading to a total burden of approximately 25,625 hours. Assembling information to update questionnaire answers in the future on a voluntary basis would be expected to take less time, on the order of 10 hours, as much of any necessary time and effort needed to research information would have been completed previously.

For the Clean Fleets Partnership information collection, the Partnership is targeted at large, private-sector fleets that own or have contractual control over at least 50 percent of their vehicles and have vehicles operating in multiple States. DOE expects approximately 50 fleets to participate in the Partnership and, as a result, DOE expects a total respondent population of approximately 50 respondents. Providing initial baseline information for each participating fleet, which occurs only once, is expected to take 60 minutes. Follow-up questions and clarifications for the purpose of ensuring accurate analyses are expected to take up to 90 minutes. The total burden is expected to be 125 hours.

The combined burden for the two information collections is 25,750 hours.

(5) Type of Respondents: Public; (6) Annual Estimated Number of Respondents for both information collections: 1,300; (7) Annual Estimated Number of Total Responses: 1,300; (7) Annual Estimated Number of Burden Hours: 25,750 (25,625 for PEV Scorecard, and 125 for Clean Fleets Partnership); and (8) Annual Estimated Reporting and Recordkeeping Cost Burden: There is no cost associated with reporting and recordkeeping.

Statutory Authority: 42 U.S.C. 13233; 42 U.S.C. 13252 (a)–(b); 42 U.S.C. 13255.

Issued in Washington, DC on: September 1, 2015.

David Howell,

Acting Director, Vehicle Technologies Office, Energy Efficiency and Renewable Energy.

[FR Doc. 2015–22538 Filed 9–4–15; 8:45 am]

BILLING CODE 6450–01–P

DEPARTMENT OF ENERGY

Federal Energy Regulatory Commission

Combined Notice of Filings #2

Take notice that the Commission received the following electric rate filings:

Docket Numbers: ER15–1196–004.
Applicants: Nevada Power Company.
Description: Compliance filing: OATT Revisions Attachment P Schedule 9 and Definitions to be effective 11/1/2015.
Filed Date: 9/1/15.
Accession Number: 20150901–5204.
Comments Due: 5 p.m. ET 9/22/15.
Docket Numbers: ER15–2304–001.
Applicants: Oildale Energy LLC.
Description: Tariff Amendment: Amendment to Initial Market-Based Rate Tariff Application to be effective 7/31/2015.
Filed Date: 8/28/15.
Accession Number: 20150828–5143.
Comments Due: 5 p.m. ET 9/8/15.
Docket Numbers: ER15–2588–000.
Applicants: Eastside Power Authority.
Description: Petition of Eastside Power Authority for Limited Waiver of the California Independent System Operator Corporation's Tariff Provisions.
Filed Date: 9/1/15.
Accession Number: 20150901–5168.
Comments Due: 5 p.m. ET 9/22/15.
Docket Numbers: ER15–2589–000.
Applicants: CPV Shore, LLC.
Description: Initial rate filing: Reactive Power Service Rate Schedule to be effective 1/1/2016.
Filed Date: 9/1/15.
Accession Number: 20150901–5187.
Comments Due: 5 p.m. ET 9/22/15.
Docket Numbers: ER15–2590–000.
Applicants: Triolith Energy Fund L.P.
Description: Baseline eTariff Filing: Triolith Energy Fund LP Tariff to be effective 9/4/2015.
Filed Date: 9/1/15.
Accession Number: 20150901–5202.
Comments Due: 5 p.m. ET 9/22/15.
Docket Numbers: ER15–2591–000.
Applicants: PacifiCorp.
Description: Section 205(d) Rate Filing: OATT Revised Sections (EIM Available Balancing Capacity) to be effective 11/1/2015.
Filed Date: 9/1/15.
Accession Number: 20150901–5203.
Comments Due: 5 p.m. ET 9/22/15.

The filings are accessible in the Commission's eLibrary system by clicking on the links or querying the docket number.

Any person desiring to intervene or protest in any of the above proceedings must file in accordance with Rules 211 and 214 of the Commission's Regulations (18 CFR 385.211 and 385.214) on or before 5:00 p.m. Eastern time on the specified comment date. Protests may be considered, but intervention is necessary to become a party to the proceeding.

eFiling is encouraged. More detailed information relating to filing requirements, interventions, protests, service, and qualifying facilities filings can be found at: *http://www.ferc.gov/docs-filing/efiling/filing-req.pdf.* For other information, call (866) 208–3676 (toll free). For TTY, call (202) 502–8659.

Dated: September 1, 2015.

Nathaniel J. Davis, Sr.,

Deputy Secretary.

[FR Doc. 2015–22509 Filed 9–4–15; 8:45 am]

BILLING CODE 6717–01–P

DEPARTMENT OF ENERGY

Federal Energy Regulatory Commission

[Docket No. ER15–2535–000]

Midwest Electric Power, Inc.; Supplemental Notice that Initial Market-Based Rate Filing Includes Request for Blanket Section 204 Authorization

This is a supplemental notice in the above-referenced proceeding of Midwest Electric Power, Inc.'s application for market-based rate authority, with an accompanying rate tariff, noting that such application includes a request for blanket authorization, under 18 CFR part 34, of future issuances of securities and assumptions of liability.

Any person desiring to intervene or to protest should file with the Federal Energy Regulatory Commission, 888 First Street NE., Washington, DC 20426, in accordance with Rules 211 and 214 of the Commission's Rules of Practice and Procedure (18 CFR 385.211 and 385.214). Anyone filing a motion to intervene or protest must serve a copy of that document on the Applicant.

Notice is hereby given that the deadline for filing protests with regard to the applicant's request for blanket authorization, under 18 CFR part 34, of future issuances of securities and assumptions of liability, is September 21, 2015.

The Commission encourages electronic submission of protests and interventions in lieu of paper, using the FERC Online links at *http://www.ferc.gov.* To facilitate electronic service, persons with Internet access who will eFile a document and/or be

listed as a contact for an intervenor must create and validate an eRegistration account using the eRegistration link. Select the eFiling link to log on and submit the intervention or protests.

Persons unable to file electronically should submit an original and 5 copies of the intervention or protest to the Federal Energy Regulatory Commission, 888 First Street NE., Washington, DC 20426.

The filings in the above-referenced proceeding are accessible in the Commission's eLibrary system by clicking on the appropriate link in the above list. They are also available for electronic review in the Commission's Public Reference Room in Washington, DC. There is an eSubscription link on the Web site that enables subscribers to receive email notification when a document is added to a subscribed docket(s). For assistance with any FERC Online service, please email *FERCOnlineSupport@ferc.gov.* or call (866) 208–3676 (toll free). For TTY, call (202) 502–8659.

Dated: September 1, 2015.

Nathaniel J. Davis, Sr.,

Deputy Secretary.

[FR Doc. 2015–22510 Filed 9–4–15; 8:45 am]

BILLING CODE 6717–01–P

DEPARTMENT OF ENERGY

Federal Energy Regulatory Commission

[Project No. 1121–119]

Pacific Gas and Electric Company; Notice of Application Accepted for Filing and Soliciting Comments, Motions To Intervene, and Protests

Take notice that the following hydroelectric application has been filed with the Commission and is available for public inspection:

a. *Application Type:* Recreation Plan Amendment.

b. *Project No:* 1121–119.

c. *Date Filed:* August 27, 2015.

d. *Applicant:* Pacific Gas and Electric Company.

e. *Name of Project:* Battle Creek Hydroelectric Project.

f. *Location:* The project is located on the mainstem Battle Creek, North Fork Battle Creek, and South Fork Battle Creek, in Shasta and Tehama counties, California.

g. *Filed Pursuant to:* Federal Power Act, 16 U.S.C. 791a—825r.

h. *Applicant Contact:* Ms. Elisabeth Rossi, License Coordinator, Pacific Gas and Electric Company, Mail Code N13E, P.O. Box 770000, San Francisco, CA 94177, (415) 973–2032.

i. *FERC Contact:* Mr. Kevin Anderson, (202) 502–6465, *kevin.anderson@ferc.gov.*

j. *Deadline for filing comments, motions to intervene, and protests:* October 2, 2015.

All documents may be filed electronically via the Internet. See 18 CFR 385.2001(a)(1)(iii) and the instructions on the Commission's Web site at *http://www.ferc.gov/docs-filing/efiling.asp.* Commenters can submit brief comments up to 6,000 characters, without prior registration, using the eComment system at *http://www.ferc.gov/docs-filing/ecomment.asp.* You must include your name and contact information at the end of your comments. For assistance, please contact FERC Online Support at *FERCOnlineSupport@ferc.gov* or toll free at 1–866–208–3676, or for TTY, (202) 502–8659. Although the Commission strongly encourages electronic filing, documents may also be paper-filed. To paper-file, mail an original and seven copies to: Secretary, Federal Energy Regulatory Commission, 888 First Street NE., Washington, DC 20426. Please include the project number (P–1121–119) on any comments, motions, or recommendations filed.

The Commission's Rules of Practice and Procedure require all intervenors filing documents with the Commission to serve a copy of that document on each person whose name appears on the official service list for the project. Further, if an intervenor files comments or documents with the Commission relating to the merits of an issue that may affect the responsibilities of a particular resource agency, they must also serve a copy of the document on that resource agency.

k. Description of Request: The licensee filed a revised recreation plan in response to a Commission staff request following an inspection which found that several sites on the approved recreation plan were either closed to the public or received little to no public recreational use. The proposed revised plan would close the fishing access areas at the Inskip Powerhouse and Coleman Forebay. To offset these closures, the licensee proposes to improve a fishing access area at the North Battle Creek Reservoir and create a new fishing access area on the Cross Country Canal off of Rock Creek Road. Aside from these revisions and deletion of extraneous or outdated information, other aspects of the current recreation plan would remain the same.

l. Locations of the Application: A copy of the application is available for inspection and reproduction at the Commission's Public Reference Room, located at 888 First Street NE., Room 2A, Washington, DC 20426, or by calling (202) 502–8371. This filing may also be viewed on the Commission's Web site at *http://www.ferc.gov* using the ''eLibrary'' link. Enter the docket number excluding the last three digits in the docket number field to access the document. You may also register online at *http://www.ferc.gov/docs-filing/esubscription.asp* to be notified via email of new filings and issuances related to this or other pending projects. For assistance, call 1–866–208–3676 or email *FERCOnlineSupport@ferc.gov,* for TTY, call (202) 502–8659. A copy is also available for inspection and reproduction at the address in item (h) above. Agencies may obtain copies of the application directly from the applicant.

m. Individuals desiring to be included on the Commission's mailing list should so indicate by writing to the Secretary of the Commission.

n. Comments, Protests, or Motions to Intervene: Anyone may submit comments, a protest, or a motion to intervene in accordance with the requirements of Rules of Practice and Procedure, 18 CFR 385.210, .211, .214, respectively. In determining the appropriate action to take, the Commission will consider all protests or other comments filed, but only those who file a motion to intervene in accordance with the Commission's Rules may become a party to the proceeding. Any comments, protests, or motions to intervene must be received on or before the specified comment date for the particular application.

o. Filing and Service of Documents: Any filing must (1) bear in all capital letters the title ''COMMENTS'', ''PROTEST'', or ''MOTION TO INTERVENE'' as applicable; (2) set forth in the heading the name of the applicant and the project number of the application to which the filing responds; (3) furnish the name, address, and telephone number of the person commenting, protesting or intervening; and (4) otherwise comply with the requirements of 18 CFR 385.2001 through 385.2005. All comments, motions to intervene, or protests must set forth their evidentiary basis. Any filing made by an intervenor must be accompanied by proof of service on all persons listed in the service list prepared by the Commission in this proceeding, in accordance with 18 CFR 385.2010.

Dated: September 1, 2015

Kimberly D. Bose,

Secretary.

[FR Doc. 2015–22516 Filed 9–4–15; 8:45 am]

BILLING CODE 6717–01–P

DEPARTMENT OF ENERGY

Federal Energy Regulatory Commission

Notice of Commission Staff Attendance

The Federal Energy Regulatory Commission (Commission) hereby gives notice that members of the Commission's staff may attend the following meetings related to the transmission planning activities of Public Service Company of Colorado, Tucson Electric Power Company, UNS Electric, Inc., Public Service Company of New Mexico, Arizona Public Service Company, El Paso Electric Company, Black Hills Power, Inc., Black Hills Colorado Electric Utility Company, LP, Cheyenne Light, Fuel, & Power Company, Arizona Public Service Company, and NV Energy, Inc.:

Planning Subcommittee Meeting, September 15, 2015, 9 a.m.–12 p.m. (MST)

Cost Allocation Subcommittee Meeting, September 15, 2015, 1 p.m.–4 p.m. (MST)

Planning Management Committee Meeting, September 16, 2015, 9 a.m.–3 p.m. (MST)

The above-referenced meetings will be held at:

Arizona Public Service Company, 2124 W Cheryl Dr., Phoenix, AZ 85021.

The above-referenced meetings will be available via web conference and teleconference.

The above-referenced meetings are open to stakeholders.

Further information may be found at *http://www.westconnect.com/index.php.*

The discussions at the meetings described above may address matters at issue in the following proceedings:

ER13–75, *Public Service Company of Colorado*

ER13–77, *Tucson Electric Power Company*

ER13–78, *UNS Electric, Inc.*

ER13–79, *Public Service Company of New Mexico*

ER13–82, *Arizona Public Service Company*

ER13–91, *El Paso Electric Company*

ER13–96, *Black Hills Power, Inc.*

ER13–97, *Black Hills Colorado Electric Utility Company, LP*

ER13–120, *Cheyenne Light, Fuel, & Power Company*

ER15–428, *NV Energy, Inc.*

ER15–411, *Arizona Public Service Company*

For more information contact Gabriel Aguilera, Office of Energy Market Regulation, Federal Energy Regulatory Commission at (202) 502–8489 or *gabriel.aguilera@ferc.gov.*

Dated: September 1, 2015

Kimberly D. Bose,

Secretary.

[FR Doc. 2015–22515 Filed 9–4–15; 8:45 am]

BILLING CODE 6717–01–P

DEPARTMENT OF ENERGY

Federal Energy Regulatory Commission

[Docket No. CP15–546–000]

Colorado Interstate Gas Company, L.L.C.; Wyoming Interstate Company, L.L.C.; Notice of Application

Take notice that on August 24, 2015, Colorado Interstate Gas Company, L.L.C. (CIG) and Wyoming Interstate Company, L.L.C. (WIC), jointly filed an application pursuant to section 7(b) of the Natural Gas Act (NGA) and Part 157 of the Commission's Regulations, for approval to abandon, by sale and in place, CIG's Powder River Lateral Pipeline and associated metering facilities located in Converse County and Albany County, Wyoming. Also, the applicants request the Commission's approval the termination of an associated Powder River Lateral capacity lease agreement between CIG and WIC. The filing may also be viewed on the web at *http://www.ferc.gov* using the ''eLibrary'' link. Enter the docket number excluding the last three digits in the docket number field to access the document. For assistance, contact FERC at *FERCOnlineSupport@gerc.gov* or call toll-free, (866) 208–3676 or TYY, (202) 502–8659.

Any questions regarding this application should be directed to Francisco Tarin, Director, Regulatory Affairs, Colorado Interstate Gas Company, L.L.C., P.O. Box 1087, Colorado Springs, Colorado, 80944, telephone (719) 667–7517, fax (719) 520–4697; or Mark A. Minich, Assistant General Counsel, Colorado Interstate Gas Company, L.L.C., P.O. Box 1087, Colorado Springs, Colorado, 80944, telephone (719) 520–4416, fax (719) 520–4415.

CIG requests the approval of an abandonment buy sale to Copano Pipelines/Rocky Mountain LLC (CP/RM) of its approximate 100-mile Powder River Lateral Pipeline (Line No. 72A) located in Converse County and Albany County, Wyoming. CIG also proposes to abandon in place of its Powder River Meter Station, North Platte Meter Station, Glenrock Meter Station, and a farm tap located on Line No. 72A. In addition, CIG and WIC request an approval the termination of the CIG/WIC capacity lease agreement currently in effect for capacity on Line No. 72A and through WIC's Laramie Jumper Compressor Station.

Pursuant to Section 157.9 of the Commission's rules, 18 CFR 157.9, within 90 days of this Notice the Commission staff will either: complete its environmental assessment (EA) and place it into the Commission's public record (eLibrary) for this proceeding, or issue a Notice of Schedule for Environmental Review. If a Notice of Schedule for Environmental Review is issued, it will indicate, among other milestones, the anticipated date for the Commission staff's issuance of the final environmental impact statement (FEIS) or EA for this proposal. The filing of the EA in the Commission's public record for this proceeding or the issuance of a Notice of Schedule will serve to notify federal and state agencies of the timing for the completion of all necessary reviews, and the subsequent need to complete all federal authorizations within 90 days of the date of issuance of the Commission staff's FEIS or EA.

There are two ways to become involved in the Commission's review of this project. First, any person wishing to obtain legal status by becoming a party to the proceedings for this project should, on or before the comment date stated below, file with the Federal Energy Regulatory Commission, 888 First Street NE., Washington, DC 20426, a motion to intervene in accordance with the requirements of the Commission's Rules of Practice and Procedure (18 CFR 385.214 or 385.211) and the Regulations under the NGA (18 CFR 157.10). A person obtaining party status will be placed on the service list maintained by the Secretary of the Commission and will receive copies of all documents filed by the applicant and by all other parties. A party must submit 5 copies of filings made with the Commission and must mail a copy to the applicant and to every other party in the proceeding. Only parties to the proceeding can ask for court review of Commission orders in the proceeding.

However, a person does not have to intervene in order to have comments considered. The second way to participate is by filing with the Secretary of the Commission, as soon as

possible, an original and two copies of comments in support of or in opposition to this project. The Commission will consider these comments in determining the appropriate action to be taken, but the filing of a comment alone will not serve to make the filer a party to the proceeding. The Commission's rules require that persons filing comments in opposition to the project provide copies of their protests only to the party or parties directly involved in the protest.

Persons who wish to comment only on the environmental review of this project should submit an original and two copies of their comments to the Secretary of the Commission. Environmental commenters will be placed on the Commission's environmental mailing list, will receive copies of the environmental documents, and will be notified of meetings associated with the Commission's environmental review process. Environmental commenters will not be required to serve copies of filed documents on all other parties. However, the non-party commenters will not receive copies of all documents filed by other parties or issued by the Commission (except for the mailing of environmental documents issued by the Commission) and will not have the right to seek court review of the Commission's final order.

Motions to intervene, protests and comments may be filed electronically via the internet in lieu of paper; see, 18 CFR 385.2001(a)(1)(iii) and the instructions on the Commission's Web site under the ''e-Filing'' link. The Commission strongly encourages electronic filings.

Comment Date: 5:00 p.m. Eastern Time on September 22, 2015.

Dated: September 1, 2015.

Kimberly D. Bose,

Secretary.

[FR Doc. 2015–22514 Filed 9–4–15; 8:45 am]

BILLING CODE 6717–01–P

DEPARTMENT OF ENERGY

Federal Energy Regulatory Commission

Combined Notice of Filings #1

Take notice that the Commission received the following electric rate filings:

Docket Numbers: ER10–2670–009; ER10–2669–009; ER14–1219–002; ER10–2253–013; ER10–3319–017; ER10–2674–009; ER10–2627–010; ER10–2629–011; ER10–1546–011; ER10–1547–009; ER14–1699–002; ER10–2636–010; ER10–1974–016; ER10–1550–010; ER10–1975–017; ER11–2424–013; ER10–2677–009; ER10–2678–008; ER10–2638–008.

Applicants: ANP Blackstone Energy Company, LLC, ANP Bellingham Energy Company, LLC, Armstrong Power, LLC, Astoria Energy LLC, Astoria Energy II LLC, Calumet Energy Team, LLC, FirstLight Hydro Generating Company, FirstLight Power Resources Management, LLC, GDF SUEZ Energy Marketing NA, Inc., Hopewell Cogeneration Ltd Partnership, Milford Power, LLC, Mt. Tom Generating Company, LLC, Northeast Energy Associates, A Limited Partnership, Northeastern Power Company, North Jersey Energy Associates, a Limited Partnership., Pinetree Power-Tamworth, Inc., Pleasants Energy, LLC, Troy Energy, LLC, Waterbury Generation, LLC.

Description: Notice of Change in Status of the GDF SUEZ MBR Sellers.

Filed Date: 8/31/15.

Accession Number: 20150831–5428.

Comments Due: 5 p.m. ET 9/21/15.

Docket Numbers: ER15–2583–000.

Applicants: California Independent System Operator Corporation.

Description: Section 205(d) Rate Filing: 2015–08–31 MEEA between CAISO and WAPA-Sierra Nevada Region to be effective 11/1/2015.

Filed Date: 8/31/15.

Accession Number: 20150831–5388.

Comments Due: 5 p.m. ET 9/21/15.

Docket Numbers: ER15–2584–000.

Applicants: New England Power Pool Participants Committee.

Description: Section 205(d) Rate Filing: Aug 31 2015 Membership Filing to be effective 9/1/2015.

Filed Date: 8/31/15.

Accession Number: 20150831–5391.

Comments Due: 5 p.m. ET 9/21/15.

Docket Numbers: ER15–2585–000.

Applicants: Oklahoma Gas and Electric Company.

Description: Tariff Cancellation: Cancellation of Cost Based Formula Tariff to be effective 9/1/2015.

Filed Date: 8/31/15.

Accession Number: 20150831–5402.

Comments Due: 5 p.m. ET 9/21/15.

Docket Numbers: ER15–2586–000.

Applicants: Southern California Edison Company.

Description: Section 205(d) Rate Filing: First Amended GIA & DSA Eco Services Operations LLC—Rhodia Project to be effective 9/2/2015.

Filed Date: 9/1/15.

Accession Number: 20150901–5011.

Comments Due: 5 p.m. ET 9/22/15.

Docket Numbers: ER15–2587–000.

Applicants: DR Power, LLC.

Description: Notice of cancellation of market based tariff of DR Power, LLC under ER15–2587.

Filed Date: 8/31/15.

Accession Number: 20150831–5435.

Comments Due: 5 p.m. ET 9/21/15.

Take notice that the Commission received the following qualifying facility filings:

Docket Numbers: QF15–997–000.

Applicants: Golden Renewable Energy, LLC.

Description: Form 556 of Golden Renewable Energy, LLC.

Filed Date: 8/31/15.

Accession Number: 20150831–5432.

Comments Due: None Applicable.

The filings are accessible in the Commission's eLibrary system by clicking on the links or querying the docket number.

Any person desiring to intervene or protest in any of the above proceedings must file in accordance with Rules 211 and 214 of the Commission's Regulations (18 CFR 385.211 and 385.214) on or before 5:00 p.m. Eastern time on the specified comment date. Protests may be considered, but intervention is necessary to become a party to the proceeding.

eFiling is encouraged. More detailed information relating to filing requirements, interventions, protests, service, and qualifying facilities filings can be found at: *http://www.ferc.gov/docs-filing/efiling/filing-req.pdf.* For other information, call (866) 208–3676 (toll free). For TTY, call (202) 502–8659.

Dated: September 1, 2015.

Nathaniel J. Davis, Sr.,

Deputy Secretary.

[FR Doc. 2015–22508 Filed 9–4–15; 8:45 am]

BILLING CODE 6717–01–P

ENVIRONMENTAL PROTECTION AGENCY

[FRL–9926–05–OEI]

Cross-Media Electronic Reporting: Authorized Program Revision Approval, State of Alabama

AGENCY: Environmental Protection Agency (EPA).

ACTION: Notice.

SUMMARY: This notice announces EPA's approval of the State of Alabama's request to revise/modify its State Operating Permit Programs EPA-authorized program to allow electronic reporting.

DATES: EPA's approval is effective September 8, 2015.

FOR FURTHER INFORMATION CONTACT: Karen Seeh, U.S. Environmental

Protection Agency, Office of Environmental Information, Mail Stop 2823T, 1200 Pennsylvania Avenue NW., Washington, DC 20460, (202) 566–1175, *seeh.karen@epa.gov.*

SUPPLEMENTARY INFORMATION: On October 13, 2005, the final Cross-Media Electronic Reporting Rule (CROMERR) was published in the **Federal Register** (70 FR 59848) and codified as part 3 of title 40 of the CFR. CROMERR establishes electronic reporting as an acceptable regulatory alternative to paper reporting and establishes requirements to assure that electronic documents are as legally dependable as their paper counterparts. Subpart D of CROMERR requires that state, tribal or local government agencies that receive, or wish to begin receiving, electronic reports under their EPA-authorized programs must apply to EPA for a revision or modification of those programs and obtain EPA approval. Subpart D provides standards for such approvals based on consideration of the electronic document receiving systems that the state, tribe, or local government will use to implement the electronic reporting. Additionally, § 3.1000(b) through (e) of 40 CFR part 3, subpart D provides special procedures for program revisions and modifications to allow electronic reporting, to be used at the option of the state, tribe or local government in place of procedures available under existing program-specific authorization regulations. An application submitted under the subpart D procedures must show that the state, tribe or local government has sufficient legal authority to implement the electronic reporting components of the programs covered by the application and will use electronic document receiving systems that meet the applicable subpart D requirements.

On July 29, 2015, the Alabama Department of Environmental Management (ADEM) submitted an application titled ''Air Emissions Electronic Reporting System'' for revision/modification to its EPA-approved operating permit program under title 40 CFR to allow new electronic reporting. EPA reviewed ADEM's request to revise/modify its EPA-authorized Part 70—State Operating Permit Program and, based on this review, EPA determined that the application met the standards for approval of authorized program revision/modification set out in 40 CFR part 3, subpart D. In accordance with 40 CFR 3.1000(d), this notice of EPA's decision to approve Alabama's request to revise/modify its Part 70—State Operating Permit Program to allow electronic reporting under 40 CFR part 70 is being published in the **Federal Register.**

ADEM was notified of EPA's determination to approve its application with respect to the authorized program listed above.

Matthew Leopard,

Director, Office of Information Collection.

[FR Doc. 2015–22063 Filed 9–4–15; 8:45 am]

BILLING CODE 6560–50–P

ENVIRONMENTAL PROTECTION AGENCY

[FRL–9932–72–OEI]

Cross-Media Electronic Reporting: Authorized Program Revision Approval, State of Mississippi

AGENCY: Environmental Protection Agency (EPA).

ACTION: Notice.

SUMMARY: This notice announces EPA's approval of the State of Mississippi's request to revise/modify certain of its EPA-authorized programs to allow electronic reporting.

DATES: EPA's approval is effective September 8, 2015.

FOR FURTHER INFORMATION CONTACT: Karen Seeh, U.S. Environmental Protection Agency, Office of Environmental Information, Mail Stop 2823T, 1200 Pennsylvania Avenue NW., Washington, DC 20460, (202) 566–1175, *seeh.karen@epa.gov.*

SUPPLEMENTARY INFORMATION: On October 13, 2005, the final Cross-Media Electronic Reporting Rule (CROMERR) was published in the **Federal Register** (70 FR 59848) and codified as part 3 of title 40 of the CFR. CROMERR establishes electronic reporting as an acceptable regulatory alternative to paper reporting and establishes requirements to assure that electronic documents are as legally dependable as their paper counterparts. Subpart D of CROMERR requires that state, tribal or local government agencies that receive, or wish to begin receiving, electronic reports under their EPA-authorized programs must apply to EPA for a revision or modification of those programs and obtain EPA approval. Subpart D provides standards for such approvals based on consideration of the electronic document receiving systems that the state, tribe, or local government will use to implement the electronic reporting. Additionally, § 3.1000(b) through (e) of 40 CFR part 3, subpart D provides special procedures for program revisions and modifications to allow electronic reporting, to be used at the option of the state, tribe or local government in place of procedures available under existing program-specific authorization regulations. An application submitted under the subpart D procedures must show that the state, tribe or local government has sufficient legal authority to implement the electronic reporting components of the programs covered by the application and will use electronic document receiving systems that meet the applicable subpart D requirements.

On June 22, 2015, the Mississippi Department of Environmental Quality (MDEQ) submitted an application titled ''Network Discharge Monitoring Report System'' for revisions/modifications to its EPA-approved stormwater and industrial pretreatment programs under title 40 CFR to allow new electronic reporting. EPA reviewed MDEQ's request to revise/modify its EPA-authorized programs and, based on this review, EPA determined that the application met the standards for approval of authorized program revisions/modifications set out in 40 CFR part 3, subpart D. In accordance with 40 CFR 3.1000(d), this notice of EPA's decision to approve Mississippi's request to revise/modify its following EPA-authorized programs to allow electronic reporting under 40 CFR parts 122 and 403, is being published in the **Federal Register**: Part 123—EPA Administered Permit Programs: The National Pollutant Discharge Elimination System; and Part 403—General Pretreatment Regulations For Existing And New Sources Of Pollution.

MDEQ was notified of EPA's determination to approve its application with respect to the authorized programs listed above.

Matthew Leopard,

Director, Office of Information Collection.

[FR Doc. 2015–22528 Filed 9–4–15; 8:45 am]

BILLING CODE 6560–50–P

FEDERAL DEPOSIT INSURANCE CORPORATION

Notice of Termination; 10067 Southern Community Bank, Fayetteville, GA

The Federal Deposit Insurance Corporation (FDIC), as Receiver for 10667 Southern Community Bank, Fayetteville, GA (Receiver) has been authorized to take all actions necessary to terminate the receivership estate of Southern Community Bank (Receivership Estate); The Receiver has made all dividend distributions required by law.

The Receiver has further irrevocably authorized and appointed FDIC-Corporate as its attorney-in-fact to execute and file any and all documents that may be required to be executed by the Receiver which FDIC-Corporate, in its sole discretion, deems necessary; including but not limited to releases, discharges, satisfactions, endorsements, assignments and deeds.

Effective September 01, 2015 the Receivership Estate has been terminated, the Receiver discharged, and the Receivership Estate has ceased to exist as a legal entity.

Dated: September 2, 2015.

Federal Deposit Insurance Corporation.

Robert E. Feldman,

Executive Secretary.

[FR Doc. 2015–22562 Filed 9–4–15; 8:45 am]

BILLING CODE 6714–01–P

FEDERAL DEPOSIT INSURANCE CORPORATION

Notice of Termination, 10473 Chipola Community Bank, Marianna, Florida

The Federal Deposit Insurance Corporation (FDIC), as Receiver for 10473 Chipola Community Bank, Marianna, Florida (Receiver) has been authorized to take all actions necessary to terminate the receivership estate of Chipola Community Bank (Receivership Estate); The Receiver has made all dividend distributions required by law.

The Receiver has further irrevocably authorized and appointed FDIC-Corporate as its attorney-in-fact to execute and file any and all documents that may be required to be executed by the Receiver which FDIC-Corporate, in its sole discretion, deems necessary; including but not limited to releases, discharges, satisfactions, endorsements, assignments and deeds.

Effective September 1, 2015 the Receivership Estate has been terminated, the Receiver discharged, and the Receivership Estate has ceased to exist as a legal entity.

Dated: September 2, 2015.

Federal Deposit Insurance Corporation.

Robert E. Feldman,

Executive Secretary.

[FR Doc. 2015–22568 Filed 9–4–15; 8:45 am]

BILLING CODE 6714–01–P

FEDERAL DEPOSIT INSURANCE CORPORATION

Notice of Termination; 10318 Paramount Bank, Farmington Hills, Michigan

The Federal Deposit Insurance Corporation (FDIC), as Receiver for 10318 Paramount Bank, Farmington Hills, Michigan (Receiver) has been authorized to take all actions necessary to terminate the receivership estate of Paramount Bank (Receivership Estate); The Receiver has made all dividend distributions required by law.

The Receiver has further irrevocably authorized and appointed FDIC-Corporate as its attorney-in-fact to execute and file any and all documents that may be required to be executed by the Receiver which FDIC-Corporate, in its sole discretion, deems necessary; including but not limited to releases, discharges, satisfactions, endorsements, assignments and deeds.

Effective September 1, 2015 the Receivership Estate has been terminated, the Receiver discharged, and the Receivership Estate has ceased to exist as a legal entity.

Dated: September 2, 2015.

Federal Deposit Insurance Corporation.

Robert E. Feldman,

Executive Secretary.

[FR Doc. 2015–22566 Filed 9–4–15; 8:45 am]

BILLING CODE 6714–01–P

FEDERAL DEPOSIT INSURANCE CORPORATION

Notice to All Interested Parties of the Termination of the Receivership of 10468 Westside Community Bank University Place, Washington

Notice is hereby given that the Federal Deposit Insurance Corporation (''FDIC'') as Receiver for Westside Community Bank, University Place, Washington (''the Receiver'') intends to terminate its receivership for said institution. The FDIC was appointed receiver of Westside Community Bank on January 11, 2013. The liquidation of the receivership assets has been completed. To the extent permitted by available funds and in accordance with law, the Receiver will be making a final dividend payment to proven creditors.

Based upon the foregoing, the Receiver has determined that the continued existence of the receivership will serve no useful purpose. Consequently, notice is given that the receivership shall be terminated, to be effective no sooner than thirty days after the date of this Notice. If any person wishes to comment concerning the termination of the receivership, such comment must be made in writing and sent within thirty days of the date of this Notice to: Federal Deposit Insurance Corporation, Division of Resolutions and Receiverships, Attention: Receivership Oversight Department 34.6, 1601 Bryan Street, Dallas, TX 75201.

No comments concerning the termination of this receivership will be considered which are not sent within this time frame.

Dated: September 2, 2015.

Federal Deposit Insurance Corporation

Robert E. Feldman,

Executive Secretary.

[FR Doc. 2015–22567 Filed 9–4–15; 8:45 am]

BILLING CODE 6714–01–P

FEDERAL DEPOSIT INSURANCE CORPORATION

Notice of Termination; 10066 First National Bank of Anthony, Anthony, KS

The Federal Deposit Insurance Corporation (FDIC), as Receiver for 10066 First National Bank of Anthony, Anthony, KS (Receiver) has been authorized to take all actions necessary to terminate the receivership estate of First National Bank of Anthony (Receivership Estate); The Receiver has made all dividend distributions required by law.

The Receiver has further irrevocably authorized and appointed FDIC-Corporate as its attorney-in-fact to execute and file any and all documents that may be required to be executed by the Receiver which FDIC-Corporate, in its sole discretion, deems necessary; including but not limited to releases, discharges, satisfactions, endorsements, assignments and deeds.

Effective September 1, 2015 the Receivership Estate has been terminated, the Receiver discharged, and the Receivership Estate has ceased to exist as a legal entity.

Dated: September 2, 2015.

Federal Deposit Insurance Corporation

Robert E. Feldman,

Executive Secretary.

[FR Doc. 2015–22561 Filed 9–4–15; 8:45 am]

BILLING CODE 6714–01–P

FEDERAL DEPOSIT INSURANCE CORPORATION

Notice of Termination, 10274, NorhWest Bank and Trust Acworth, Georgia

The Federal Deposit Insurance Corporation (FDIC), as Receiver for 10274, NorthWest Bank and Trust, Acworth, GA (Receiver) has been authorized to take all actions necessary to terminate the receivership estate of NorthWest Bank and Trust (Receivership Estate); The Receiver has made all dividend distributions required by law.

The Receiver has further irrevocably authorized and appointed FDIC-Corporate as its attorney-in-fact to execute and file any and all documents that may be required to be executed by the Receiver which FDIC-Corporate, in its sole discretion, deems necessary; including but not limited to releases, discharges, satisfactions, endorsements, assignments and deeds.

Effective September 1, 2015, the Receivership Estate has been terminated, the Receiver discharged, and the Receivership Estate has ceased to exist as a legal entity.

Dated: September 2, 2015.

Federal Deposit Insurance Corporation.

Robert E. Feldman,

Executive Secretary.

[FR Doc. 2015–22565 Filed 9–4–15; 8:45 am]

BILLING CODE 6714–01–P

FEDERAL DEPOSIT INSURANCE CORPORATION

Notice to All Interested Parties of the Termination of the Receivership of 10243 Bank of Florida—Tampa Bay, Tampa, Florida

Notice is hereby given that the Federal Deposit Insurance Corporation (''FDIC'') as Receiver for Bank of Florida—Tampa Bay, Tampa, Florida (''the Receiver'') intends to terminate its receivership for said institution. The FDIC was appointed receiver of Bank of Florida—Tampa Bay on May 28, 2010. The liquidation of the receivership assets has been completed. To the extent permitted by available funds and in accordance with law, the Receiver will be making a final dividend payment to proven creditors.

Based upon the foregoing, the Receiver has determined that the continued existence of the receivership will serve no useful purpose. Consequently, notice is given that the receivership shall be terminated, to be effective no sooner than thirty days after the date of this Notice. If any person wishes to comment concerning the termination of the receivership, such comment must be made in writing and sent within thirty days of the date of this Notice to: Federal Deposit Insurance Corporation, Division of Resolutions and Receiverships, Attention: Receivership Oversight Department 34.6, 1601 Bryan Street, Dallas, TX 75201.

No comments concerning the termination of this receivership will be considered which are not sent within this time frame.

Date: September 2, 2015.

Federal Deposit Insurance Corporation.

Robert E. Feldman,

Executive Secretary.

[FR Doc. 2015–22564 Filed 9–4–15; 8:45 am]

BILLING CODE 6714–01–P

FEDERAL DEPOSIT INSURANCE CORPORATION

Notice of Termination; 10201, American National Bank, Parma, Ohio

The Federal Deposit Insurance Corporation (FDIC), as Receiver for 10201, American National Bank, Parma, Ohio (Receiver) has been authorized to take all actions necessary to terminate the receivership estate of American National Bank (Receivership Estate); The Receiver has made all dividend distributions required by law.

The Receiver has further irrevocably authorized and appointed FDIC-Corporate as its attorney-in-fact to execute and file any and all documents that may be required to be executed by the Receiver which FDIC-Corporate, in its sole discretion, deems necessary; including but not limited to releases, discharges, satisfactions, endorsements, assignments and deeds.

Effective September 1, 2015 the Receivership Estate has been terminated, the Receiver discharged, and the Receivership Estate has ceased to exist as a legal entity.

Dated: September 2, 2015.

Federal Deposit Insurance Corporation.

Robert E. Feldman,

Executive Secretary.

[FR Doc. 2015–22563 Filed 9–4–15; 8:45 am]

BILLING CODE 6714–01–P

FEDERAL RESERVE SYSTEM

Change in Bank Control Notices; Acquisitions of Shares of a Bank or Bank Holding Company

The notificants listed below have applied under the Change in Bank Control Act (12 U.S.C. 1817(j)) and § 225.41 of the Board's Regulation Y (12 CFR 225.41) to acquire shares of a bank or bank holding company. The factors that are considered in acting on the notices are set forth in paragraph 7 of the Act (12 U.S.C. 1817(j)(7)).

The notices are available for immediate inspection at the Federal Reserve Bank indicated. The notices also will be available for inspection at the offices of the Board of Governors. Interested persons may express their views in writing to the Reserve Bank indicated for that notice or to the offices of the Board of Governors. Comments must be received not later than September 22, 2015.

A. Federal Reserve Bank of New York (Ivan Hurwitz, Vice President) 33 Liberty Street New York, New York 10045–0001:

1. *Frederick Hing Kwok Chau; Christopher Yeou-Hwa Chau; Karen Yeou-Hung Pellett; and FD Chau Family LLC,* all of Brea, California; to collectively acquire additional voting shares of First American International Corp., and thereby indirectly acquire additional voting shares of First American International Bank, both in Brooklyn, New York.

B. Federal Reserve Bank of Atlanta (Chapelle Davis, Assistant Vice President) 1000 Peachtree Street NE., Atlanta, Georgia 30309:

1. *Michael William Mathis,* Rome, Georgia; to acquire voting shares of RCB Financial Corporation and thereby indirectly acquire voting shares of River City Bank, both in Rome, Georgia.

C. Federal Reserve Bank of Kansas City (Dennis Denney, Assistant Vice President) 1 Memorial Drive, Kansas City, Missouri 64198–0001:

1. *Catherine Ann Bosch,* Manhattan, Kansas; to acquire voting shares of Alta Vista Bancshares, Inc., and thereby indirectly acquire voting shares of Alta Vista Bank, both in Alta Vista, Kansas.

Board of Governors of the Federal Reserve System, September 2, 2015.

Michael J. Lewandowski,

Associate Secretary of the Board.

[FR Doc. 2015–22519 Filed 9–4–15; 8:45 am]

BILLING CODE 6210–01–P

FEDERAL RESERVE SYSTEM

Formations of, Acquisitions by, and Mergers of Bank Holding Companies

The companies listed in this notice have applied to the Board for approval, pursuant to the Bank Holding Company Act of 1956 (12 U.S.C. 1841 *et seq.*) (BHC Act), Regulation Y (12 CFR part 225), and all other applicable statutes and regulations to become a bank holding company and/or to acquire the assets or the ownership of, control of, or the power to vote shares of a bank or bank holding company and all of the banks and nonbanking companies owned by the bank holding company, including the companies listed below.

The applications listed below, as well as other related filings required by the Board, are available for immediate inspection at the Federal Reserve Bank indicated. The applications will also be available for inspection at the offices of the Board of Governors. Interested persons may express their views in writing on the standards enumerated in the BHC Act (12 U.S.C. 1842(c)). If the proposal also involves the acquisition of a nonbanking company, the review also includes whether the acquisition of the nonbanking company complies with the standards in section 4 of the BHC Act (12 U.S.C. 1843). Unless otherwise noted, nonbanking activities will be conducted throughout the United States.

Unless otherwise noted, comments regarding each of these applications must be received at the Reserve Bank indicated or the offices of the Board of Governors not later than October 2, 2015.

A. Federal Reserve Bank of Chicago (Colette A. Fried, Assistant Vice President) 230 South LaSalle Street, Chicago, Illinois 60690–1414:

1. *West Town Bancorp, Inc.,* Raleigh, North Carolina; to become a bank holding company by acquiring 100 percent of the voting shares of West Town Bank, Cicero, Illinois.

B. Federal Reserve Bank of Kansas City (Dennis Denney, Assistant Vice President) 1 Memorial Drive, Kansas City, Missouri 64198–0001:

1. *CSBO Holdings, Inc.,* Ridgway, Colorado; to become a bank holding company by acquiring 100 percent of the voting shares of Citizens State Bank of Ouray, Ouray, Colorado.

Board of Governors of the Federal Reserve System, September 2, 2015.

Michael J. Lewandowski,

Associate Secretary of the Board.

[FR Doc. 2015–22518 Filed 9–4–15; 8:45 am]

BILLING CODE 6210–01–P

DEPARTMENT OF HEALTH AND HUMAN SERVICES

Centers for Disease Control and Prevention

[30 Day–15–0666]

Agency Forms Undergoing Paperwork Reduction Act Review

The Centers for Disease Control and Prevention (CDC) has submitted the following information collection request to the Office of Management and Budget (OMB) for review and approval in accordance with the Paperwork Reduction Act of 1995. The notice for the proposed information collection is published to obtain comments from the public and affected agencies.

Written comments and suggestions from the public and affected agencies concerning the proposed collection of information are encouraged. Your comments should address any of the following: (a) Evaluate whether the proposed collection of information is necessary for the proper performance of the functions of the agency, including whether the information will have practical utility; (b) Evaluate the accuracy of the agencies estimate of the burden of the proposed collection of information, including the validity of the methodology and assumptions used; (c) Enhance the quality, utility, and clarity of the information to be collected; (d) Minimize the burden of the collection of information on those who are to respond, including through the use of appropriate automated, electronic, mechanical, or other technological collection techniques or other forms of information technology, *e.g.,* permitting electronic submission of responses; and (e) Assess information collection costs.

To request additional information on the proposed project or to obtain a copy of the information collection plan and instruments, call (404) 639–7570 or send an email to *omb@cdc.gov.* Written comments and/or suggestions regarding the items contained in this notice should be directed to the Attention: CDC Desk Officer, Office of Management and Budget, Washington, DC 20503 or by fax to (202) 395–5806. Written comments should be received within 30 days of this notice.

Proposed Project

National Healthcare Safety Network (NHSN) (OMB No. 0920–0666, exp. 12/31/2017)—Revision—National Center for Emerging and Zoonotic Infectious Diseases (NCEZID), Centers for Disease Control and Prevention (CDC).

Background and Brief Description

The National Healthcare Safety Network (NHSN) is a system designed to accumulate, exchange, and integrate relevant information and resources among private and public stakeholders to support local and national efforts to protect patients and promote healthcare safety. Specifically, the data is used to determine the magnitude of various healthcare-associated adverse events and trends in the rates of these events among patients and healthcare workers with similar risks. The data will be used to detect changes in the epidemiology of adverse events resulting from new and current medical therapies and changing risks. The NHSN currently consists of five components: Patient Safety, Healthcare Personnel Safety, Biovigilance, Long-Term Care Facility (LTCF), and Dialysis. The Outpatient Procedure Component is on track to be released in NHSN in 2016/2017. The development of this component has been previously delayed to obtain additional user feedback and support from outside partners.

Changes were made to seven facility surveys. Based on user feedback and internal reviews of the annual facility surveys it was determined that questions and response options be amended, removed, or added to fit the evolving uses of the annual facility surveys. The surveys are being increasingly used to help intelligently interpret the other data elements reported into NHSN. Currently the surveys are used to appropriately risk adjust the numerator and denominator data entered into NHSN while also guiding decisions on future division priorities for prevention.

Additionally, minor revisions have been made to 27 forms within the package to clarify and/or update surveillance definitions. Two forms are being removed as those forms will no longer be added to the NHSN system.

The previously approved NHSN package included 54 individual collection forms; the current revision request removes two forms for a total of 52 forms. The reporting burden will increase by 583,825 hours, for a total of 4,861,542 hours.

ESTIMATED ANNUALIZED BURDEN HOURS

Type of respondents	Form name	Number of respondents	Number of responses per respondent	Average burden per response (in hours)
Registered Nurse (Infection Preventionist)	NHSN Registration Form	2,000	1	5/60
Registered Nurse (Infection Preventionist)	Facility Contact Information	2,000	1	10/60
Registered Nurse (Infection Preventionist)	Patient Safety Component—Annual Hospital Survey.	5,000	1	50/60
Registered Nurse (Infection Preventionist)	Group Contact Information	1,000	1	5/60
Registered Nurse (Infection Preventionist)	Patient Safety Monthly Reporting Plan	6,000	12	15/60
Registered Nurse (Infection Preventionist)	Primary Bloodstream Infection (BSI)	6,000	44	30/60
Registered Nurse (Infection Preventionist)	Pneumonia (PNEU)	6,000	72	30/60
Registered Nurse (Infection Preventionist)	Ventilator-Associated Event	6,000	144	25/60
Registered Nurse (Infection Preventionist)	Urinary Tract Infection (UTI)	6,000	40	20/60
Staff RN	Denominators for Neonatal Intensive Care Unit (NICU).	6,000	9	3
Staff RN	Denominators for Specialty Care Area (SCA)/Oncology (ONC).	6,000	9	5
Staff RN	Denominators for Intensive Care Unit (ICU)/Other locations (not NICU or SCA).	6,000	60	5
Registered Nurse (Infection Preventionist)	Surgical Site Infection (SSI)	6,000	36	35/60
Staff RN	Denominator for Procedure	6,000	540	5/60
Laboratory Technician	Antimicrobial Use and Resistance (AUR)-Microbiology Data Electronic Upload Specification Tables.	6,000	12	5/60
Pharmacy Technician	Antimicrobial Use and Resistance (AUR)-Pharmacy Data Electronic Upload Specification Tables.	6,000	12	5/60
Registered Nurse (Infection Preventionist)	Central Line Insertion Practices Adherence Monitoring.	1,000	100	25/60
Registered Nurse (Infection Preventionist)	MDRO or CDI Infection Form	6,000	72	30/60
Registered Nurse (Infection Preventionist)	MDRO and CDI Prevention Process and Outcome Measures Monthly Monitoring.	6,000	24	15/60
Registered Nurse (Infection Preventionist)	Laboratory-identified MDRO or CDI Event	6,000	240	30/60
Registered Nurse (Infection Preventionist)	Long-Term Care Facility Component—Annual Facility Survey.	250	1	1
Registered Nurse (Infection Preventionist)	Laboratory-identified MDRO or CDI Event for LTCF.	250	8	15/60
Registered Nurse (Infection Preventionist)	MDRO and CDI Prevention Process Measures Monthly Monitoring for LTCF.	250	12	5/60
Registered Nurse (Infection Preventionist)	Urinary Tract Infection (UTI) for LTCF	250	9	30/60
Registered Nurse (Infection Preventionist)	Monthly Reporting Plan for LTCF	250	12	5/60
Registered Nurse (Infection Preventionist)	Denominators for LTCF Locations	250	12	3.25
Registered Nurse (Infection Preventionist)	Prevention Process Measures Monthly Monitoring for LTCF.	250	12	5/60
Registered Nurse (Infection Preventionist)	LTAC Annual Survey	400	1	50/60
Registered Nurse (Infection Preventionist)	Rehab Annual Survey	1,000	1	50/60
Occupational Health RN/Specialist	Healthcare Personnel Safety Component Annual Facility Survey.	50	1	8
Occupational Health RN/Specialist	Healthcare Personnel Safety Monthly Reporting Plan.	17,000	1	5/60
Occupational Health RN/Specialist	Healthcare Worker Demographic Data	50	200	20/60
Occupational Health RN/Specialist	Exposure to Blood/Body Fluids	50	50	1
Occupational Health RN/Specialist	Healthcare Worker Prophylaxis/Treatment	50	30	15/60
Laboratory Technician	Follow-Up Laboratory Testing	50	50	15/60
Occupational Health RN/Specialist	Healthcare Worker Prophylaxis/Treatment-Influenza.	50	50	10/60
Medical/Clinical Laboratory Technologist	Hemovigilance Module Annual Survey	500	1	2
Medical/Clinical Laboratory Technologist	Hemovigilance Module Monthly Reporting Plan.	500	12	1/60
Medical/Clinical Laboratory Technologist	Hemovigilance Module Monthly Reporting Denominators.	500	12	1
Medical/Clinical Laboratory Technologist	Hemovigilance Adverse Reaction	500	48	15/60
Medical/Clinical Laboratory Technologist	Hemovigilance Incident	500	10	10/60
Staff RN	Patient Safety Component—Annual Facility Survey for Ambulatory Surgery Center (ASC).	5,000	1	5/60
Staff RN	Outpatient Procedure Component—Monthly Reporting Plan.	5,000	12	15/60
Staff RN	Outpatient Procedure Component Event	5,000	25	40/60
Staff RN	Outpatient Procedure Component—Monthly Denominators and Summary.	5,000	12	40/60
Registered Nurse (Infection Preventionist)	Outpatient Dialysis Center Practices Survey	6,500	1	2.0

ESTIMATED ANNUALIZED BURDEN HOURS—Continued

Type of respondents	Form name	Number of respondents	Number of responses per respondent	Average burden per response (in hours)
Staff RN	Dialysis Monthly Reporting Plan	6,500	12	5/60
Staff RN	Dialysis Event	6,500	60	25/60
Staff RN	Denominators for Dialysis Event Surveillance	6,500	12	10/60
Staff RN	Prevention Process Measures Monthly Monitoring for Dialysis.	1,500	12	1.25
Staff RN	Dialysis Patient Influenza Vaccination	325	75	10/60
Staff RN	Dialysis Patient Influenza Vaccination Denominator.	325	5	10/60

Leroy A. Richardson,

Chief, Information Collection Review Office, Office of Scientific Integrity, Office of the Associate Director for Science, Office of the Director, Centers for Disease Control and Prevention.

[FR Doc. 2015–22529 Filed 9–4–15; 8:45 am]

BILLING CODE 4163–18–P

DEPARTMENT OF HEALTH AND HUMAN SERVICES

Centers for Disease Control and Prevention

Statement of Organization, Functions, and Delegations of Authority; Correction

This document corrects a notice that was published in the **Federal Register** on Tuesday, June 16, 2015 (78 FR 34437–34438) announcing the reorganization of the National Institute for Occupational Safety and Health, Centers for Disease Control and Prevention. Replace the title of *Research Branch (CCLE),* with *Research Branch (CCLG),* and replace *Conformity Verification & Standards Development Branch (CCLG),* with *Conformity Verification & Standards Development Branch (CCLE).*

James Seligman,

Acting Chief Operating Officer, Centers for Disease Control and Prevention.

[FR Doc. 2015–22535 Filed 9–4–15; 8:45 am]

BILLING CODE 4160–18–P

DEPARTMENT OF HEALTH AND HUMAN SERVICES

Centers for Disease Control and Prevention

[60Day–15–0950; Docket No. CDC–2015–0078]

Proposed Data Collection Submitted for Public Comment and Recommendations

AGENCY: Centers for Disease Control and Prevention (CDC), Department of Health and Human Services (HHS).

ACTION: Notice with comment period.

SUMMARY: The Centers for Disease Control and Prevention (CDC), as part of its continuing efforts to reduce public burden and maximize the utility of government information, invites the general public and other Federal agencies to take this opportunity to comment on proposed and/or continuing information collections, as required by the Paperwork Reduction Act of 1995. This notice invites comment on the proposed revision of the National Health and Nutrition Examination Survey (NHANES). NHANES programs produce descriptive statistics which measure the health and nutrition status of the general population.

DATES: Written comments must be received on or before November 9, 2015.

ADDRESSES: You may submit comments, identified by Docket No. CDC–2015–0078 by any of the following methods:

- *Federal eRulemaking Portal: Regulation.gov.* Follow the instructions for submitting comments.
- *Mail:* Leroy A. Richardson, Information Collection Review Office, Centers for Disease Control and Prevention, 1600 Clifton Road NE., MS–D74, Atlanta, Georgia 30329.

Instructions: All submissions received must include the agency name and Docket Number. All relevant comments received will be posted without change to *Regulations.gov,* including any personal information provided. For access to the docket to read background documents or comments received, go to *Regulations.gov.*

FOR FURTHER INFORMATION CONTACT: To request more information on the proposed project or to obtain a copy of the information collection plan and instruments, contact the Information Collection Review Office, Centers for Disease Control and Prevention, 1600 Clifton Road NE., MS–D74, Atlanta, Georgia 30329; phone: 404–639–7570; Email: *omb@cdc.gov.*

SUPPLEMENTARY INFORMATION: Under the Paperwork Reduction Act of 1995 (PRA) (44 U.S.C. 3501–3520), Federal agencies must obtain approval from the Office of Management and Budget (OMB) for each collection of information they conduct or sponsor. In addition, the PRA also requires Federal agencies to provide a 60-day notice in the **Federal Register** concerning each proposed collection of information, including each new proposed collection, each proposed extension of existing collection of information, and each reinstatement of previously approved information collection before submitting the collection to OMB for approval. To comply with this requirement, we are publishing this notice of a proposed data collection as described below.

Comments are invited on: (a) Whether the proposed collection of information is necessary for the proper performance of the functions of the agency, including whether the information shall have practical utility; (b) the accuracy of the agency's estimate of the burden of the proposed collection of information; (c) ways to enhance the quality, utility, and clarity of the information to be collected; (d) ways to minimize the burden of the collection of information on respondents, including through the use of automated collection techniques or other forms of information technology; and (e) estimates of capital or start-up costs and costs of operation, maintenance, and purchase of services

to provide information. Burden means the total time, effort, or financial resources expended by persons to generate, maintain, retain, disclose or provide information to or for a Federal agency. This includes the time needed to review instructions; to develop, acquire, install and utilize technology and systems for the purpose of collecting, validating and verifying information, processing and maintaining information, and disclosing and providing information; to train personnel and to be able to respond to a collection of information, to search data sources, to complete and review the collection of information; and to transmit or otherwise disclose the information.

Proposed Project

The National Health and Nutrition Examination Survey (NHANES), (OMB No. 0920–0950, expires 11/30/2016)—Revision—National Center for Health Statistics (NCHS), Centers for Disease Control and Prevention (CDC).

Background and Brief Description

Section 306 of the Public Health Service (PHS) Act (42 U.S.C. 242k), as amended, authorizes that the Secretary of Health and Human Services (DHHS), acting through NCHS, shall collect statistics on the extent and nature of illness and disability; environmental, social and other health hazards; and determinants of health of the population of the United States. The National Health and Nutrition Examination Surveys (NHANES) have been conducted periodically between 1970 and 1994, and continuously since 1999 by the National Center for Health Statistics, CDC. Annually, approximately 14,410 respondents participate in some aspect of the full survey. Up to 3,500 additional persons might participate in tests of procedures, special studies, or methodological studies.

NHANES programs produce descriptive statistics which measure the health and nutrition status of the general population. Through the use of physical examinations, laboratory tests, and interviews NHANES studies the relationship between diet, nutrition and health in a representative sample of the United States. NHANES monitors the prevalence of chronic conditions and risk factors. NHANES data are used to produce national reference data on height, weight, and nutrient levels in the blood. Results from more recent NHANES can be compared to findings reported from previous surveys to monitor changes in the health of the U.S. population over time. NCHS collects personal identification information. Participant level data items will include basic demographic information, name, address, social security number, Medicare number and participant health information to allow for linkages to other data sources such as the National Death Index and data from the Centers for Medicare and Medicaid Services (CMS).

A variety of agencies sponsor data collection components on NHANES. To keep burden down, NCHS cycles in and out various components. The 2015–2016 NHANES physical examination includes the following components: oral glucose tolerance test (ages 12 and older), anthropometry (all ages), 24-hour dietary recall (all ages), physician's examination (all ages, blood pressure is collected here), oral health examination (ages 1 and older), hearing (ages 20–59), dual X-ray absorptiometry (total body composition ages 6–59 and osteoporosis, vertebral fractures and aortic calcification ages 40 and older).

While at the examination center additional interview questions are asked (6 and older), a second 24-hour dietary recall (all ages) is scheduled to be conducted by phone 3–10 days later, and an appointment is made to return to the MEC to begin a 24-hour urine collection (one-half sample of ages 20–69). In 2014, a 24-hour urine collection was added to the NHANES protocol to better understand sodium intake and provide a population baseline for use in monitoring trends in sodium intake in the future. In 2015, FDA is scheduled to implement a plan to promote broad, gradual reduction of added sodium in the food supply. One half of those successfully completing the initial collection will be asked to complete a second 24-hour urine. After completing the 24-hour urine participants are asked to provide 2 home urine collections (first morning and an evening) and mail them back. The urines collected in the morning and evening will be compared to the 24-hour urine collection.

NHANES also plans to conduct a waist circumference methodology study. The study population will be NHANES participants aged 20 and over who participate in the body measurements component in the Mobile Examination Center (MEC).

The bio-specimens collected for laboratory tests include urine, blood, vaginal and penile swabs, oral rinses and household water collection. Serum, plasma and urine specimens are stored for future testing if the participant consents.

The following major examination or laboratory items, that had been included in the 2013–2014 NHANES, were cycled out for NHANES 2015–2016: physical activity monitor, taste and smell component and upper body muscle strength (grip test).

Most sections of the NHANES interviews provide self-reported information to be used either in concert with specific examination or laboratory content, as independent prevalence estimates, or as covariates in statistical analysis (*e.g.,* socio-demographic characteristics). Some examples include alcohol, drug, and tobacco use, sexual behavior, prescription and aspirin use, and indicators of oral, bone, reproductive, and mental health. Several interview components support the nutrition monitoring objective of NHANES, including questions about food security and nutrition program participation, dietary supplement use, and weight history/self-image/related behavior.

NHANES data users include the U.S. Congress; numerous Federal agencies such as other branches of the Centers for Disease Control and Prevention, the National Institutes of Health, and the United States Department of Agriculture; private groups such as the American Heart Association; schools of public health; and private businesses.

Participation in NHANES is completely voluntary and confidential. A three-year approval is requested. There is no cost to respondents other than their time.

ESTIMATED ANNUALIZED BURDEN HOURS

Type of respondent	Form name	Number of respondents	Number of responses per respondent	Average burden per response (in hours)	Total burden hours
Individuals in households	NHANES Questionnaire	14,410	1	2.5	36,025
Individuals in households	Waist Circumference Methodology Studies.	3,000	1	8/60	400

ESTIMATED ANNUALIZED BURDEN HOURS—Continued

Type of respondent	Form name	Number of respondents	Number of responses per respondent	Average burden per response (in hours)	Total burden hours
Individuals in households	Special Studies	3,500	1	3	10,500
Total					46,925

Leroy A. Richardson,

Chief, Information Collection Review, Office Office of Scientific Integrity, Office of the Associate Director for Science, Office of the Director, Centers for Disease Control and Prevention.

[FR Doc. 2015–22550 Filed 9–4–15; 8:45 am]

BILLING CODE 4163–18–P

DEPARTMENT OF HEALTH AND HUMAN SERVICES

Centers for Disease Control and Prevention

[60Day–15–0488; Docket No. CDC–2015–0079]

Proposed Data Collection Submitted for Public Comment and Recommendations

AGENCY: Centers for Disease Control and Prevention (CDC), Department of Health and Human Services (HHS).

ACTION: Notice with comment period.

SUMMARY: The Centers for Disease Control and Prevention (CDC), as part of its continuing efforts to reduce public burden and maximize the utility of government information, invites the general public and other Federal agencies to take this opportunity to comment on proposed and/or continuing information collections, as required by the Paperwork Reduction Act of 1995. This notice invites comment on the proposed revision of the information collection request entitled *Restrictions on Interstate Travel of Persons (42 CFR part 70).* This information collection request outlines regulatory reporting requirements for communicable disease reporting from conveyances engaged in interstate travel within the United States.

DATES: Written comments must be received on or before November 9, 2015.

ADDRESSES: You may submit comments, identified by Docket No. CDC–2015–0079 by any of the following methods:

- *Federal eRulemaking Portal: Regulation.gov.* Follow the instructions for submitting comments.
- *Mail:* Leroy A. Richardson, Information Collection Review Office, Centers for Disease Control and Prevention, 1600 Clifton Road NE., MS–D74, Atlanta, Georgia 30329.

Instructions: All submissions received must include the agency name and Docket Number. All relevant comments received will be posted without change to *Regulations.gov*, including any personal information provided. For access to the docket to read background documents or comments received, go to *Regulations.gov*.

Please note: All public comment should be submitted through the Federal eRulemaking portal (*Regulations.gov*) or by U.S. mail to the address listed above.

FOR FURTHER INFORMATION CONTACT: To request more information on the proposed project or to obtain a copy of the information collection plan and instruments, contact the Information Collection Review Office, Centers for Disease Control and Prevention, 1600 Clifton Road NE., MS–D74, Atlanta, Georgia 30329; phone: 404–639–7570; Email: *omb@cdc.gov.*

SUPPLEMENTARY INFORMATION: Under the Paperwork Reduction Act of 1995 (PRA) (44 U.S.C. 3501–3520), Federal agencies must obtain approval from the Office of Management and Budget (OMB) for each collection of information they conduct or sponsor. In addition, the PRA also requires Federal agencies to provide a 60-day notice in the **Federal Register** concerning each proposed collection of information, including each new proposed collection, each proposed extension of existing collection of information, and each reinstatement of previously approved information collection before submitting the collection to OMB for approval. To comply with this requirement, we are publishing this notice of a proposed data collection as described below.

Comments are invited on: (a) Whether the proposed collection of information is necessary for the proper performance of the functions of the agency, including whether the information shall have practical utility; (b) the accuracy of the agency's estimate of the burden of the proposed collection of information; (c) ways to enhance the quality, utility, and clarity of the information to be collected; (d) ways to minimize the burden of the collection of information on respondents, including through the use of automated collection techniques or other forms of information technology; and (e) estimates of capital or start-up costs and costs of operation, maintenance, and purchase of services to provide information. Burden means the total time, effort, or financial resources expended by persons to generate, maintain, retain, disclose or provide information to or for a Federal agency. This includes the time needed to review instructions; to develop, acquire, install and utilize technology and systems for the purpose of collecting, validating and verifying information, processing and maintaining information, and disclosing and providing information; to train personnel and to be able to respond to a collection of information, to search data sources, to complete and review the collection of information; and to transmit or otherwise disclose the information.

Proposed Project

Restrictions on Interstate Travel of Persons (42 CFR part 70) (OMB Control No. 0920–0488 exp. 3/31/2016)—Revision—Division of Global Migration and Quarantine, National Center for Emerging Zoonotic and Infectious Diseases, Centers for Disease Control and Prevention (CDC).

Background and Brief Description

This revision to an existing information collection request is intended to ensure that CDC can continue to collect pertinent information related to communicable disease or deaths that occur aboard conveyances during interstate travel within the United States, as authorized under 42 Code of Federal Regulations part 70.

The intended use of the information is to ensure that CDC can assess and respond to reports of communicable disease or death that occur on conveyances engaged in interstate travel, and assist state and local health authorities if an illness or death occurs that poses a risk to public health. Generally, the primary source of this

information is aircraft traveling within the United States.

This revision makes several modification to this information collection. They are as follows:

• In current practice, CDC does not process applications for travel permits. The issuance of travel restrictions is a collaborative process between public health partners, *e.g.,* state health departments, the Department of Homeland Security, and CDC. There is no standardized collection of information involved. This change results in the removal of the Ill Person Travel Permit from the list of information collections as well as the removal of the associated burden.

• Reports of communicable disease or death from domestic conveyances are almost always submitted electronically via radio, so the current Master of Vessel or Conveyance Illness Report has been rendered obsolete. In addition, CDC has issued guidance stating that reports to CDC, instead of local health authorities, regarding domestic reports of communicable disease or death on board conveyances meet the requirements of the regulation; therefore, information collections related to copies sent to state health departments are no longer necessary. This primary concerns interstate flights.

• CDC is also requesting an adjustment to the burden associated with reports of communicable disease or death from domestic conveyances. CDC is reducing the burden from 15 minutes per report to 7 minutes. This is due to the facilitation of reporting using electronic means, *i.e.,* Air Traffic Control and the Domestic Events Network for domestic flights.

The resulting change in burden is a reduction of 3,678 hours.

For reports of death or communicable disease made by master of a vessel or person in charge of a conveyance engaged in interstate traffic, the requested burden is approximately 23 hours. This total is estimated from 200 respondents submitting domestic reports of death or communicable disease a year, with an average burden of 7 minutes per report. This totals 23 hours. There is no burden to respondents other than the time required to make the report of illness or death.

ESTIMATED ANNUALIZED BURDEN HOURS

Type of respondent	Form name	Number of respondents	Number of responses per respondent	Average burden per response (in hours)	Total burden (in hours)
Master of a vessel or person in charge of a conveyance.	42 CFR 70.4 Report by the master of a vessel or person in charge of conveyance of the incidence of a communicable disease occurring while in interstate travel.	200	1	7/60	23
Total					23

Leroy A. Richardson,

Chief, Information Collection Review Office, Office of Scientific Integrity, Office of the Associate Director for Science, Office of the Director, Centers for Disease Control and Prevention.

[FR Doc. 2015–22549 Filed 9–4–15; 8:45 am]

BILLING CODE 4163–18–P

DEPARTMENT OF HEALTH AND HUMAN SERVICES

Centers for Disease Control and Prevention

[CDC–2015–0075, Docket Number NIOSH–288]

A Vapor Containment Performance Protocol for Closed System Transfer Devices Used During Pharmacy Compounding and Administration of Hazardous Drugs; Request for Comment

AGENCY: National Institute for Occupational Safety and Health (NIOSH) of the Centers for Disease Control and Prevention (CDC), Department of Health and Human Services (HHS).

ACTION: Notice of draft document available for public comment.

SUMMARY: The National Institute for Occupational Safety and Health (NIOSH) of the Centers for Disease Control and Prevention (CDC) announces the availability of the following draft document for public comment entitled *A Vapor Containment Performance Protocol for Closed System Transfer Devices Used During Pharmacy Compounding and Administration of Hazardous Drugs.* The document and instructions for submitting comments can be found at *www.regulations.gov.*

This guidance document does not have the force and effect of law.

Table of Contents

• DATES:
• ADDRESSES:
• FOR FURTHER INFORMATION CONTACT:
• SUPPLEMENTARY INFORMATION:

DATES: Electronic or written comments must be received by November 9, 2015.

ADDRESSES: You may submit comments, identified by CDC–2015–0075 and Docket Number NIOSH–288, by either of the two following methods:

• *Federal eRulemaking Portal: www.regulations.gov* Follow the instructions for submitting comments.

• *Mail:* NIOSH Docket Office, Robert A. Taft Laboratories, 1090 Tusculum Avenue, MS–C34, Cincinnati, Ohio 45226.

Instructions: All information received in response to this notice must include the agency name and the docket number (CDC–2015–0075; NIOSH–288). All relevant comments received will be posted without change to *www.regulations.gov,* including any personal information provided. All electronic comments should be formatted as Microsoft Word. Please make reference to CDC–2015–0075 and Docket Number NIOSH–288. All information received in response to this notice will also be available for public examination and copying at the NIOSH Docket Office, 1150 Tusculum Avenue, Room 155, Cincinnati, OH 45226–1998.

FOR FURTHER INFORMATION CONTACT: Deborah V. Hirst, NIOSH, Division of Applied Research and Technology, Alice Hamilton Laboratories, 1090 Tusculum Avenue, MS R–5, Cincinnati, Ohio 45226, (513) 841–4141 (not a toll free number), Email: *hazardousdrugs@cdc.gov.*

SUPPLEMENTARY INFORMATION: The purpose of the protocol is to test a closed system transfer device's (CSTD) capability to perform as a closed system. During an evaluation of the protocol,

registered pharmacists, familiar with the use of CSTDs, tested the protocol's prescribed compounding and administration tasks using five commercially available CSTDs. They also performed the assigned tasks using a negative control condition without a CSTD. Prescribed tasks were performed in a NIOSH-developed environmental test chamber with 70% isopropyl alcohol (IPA) as the challenge agent. A highly specific gas analyzer, with measurement capabilities specific to IPA and with a low limit of detection (LOD), was used to detect vapor concentrations of escaped IPA during the tasks. The protocol is not intended for CSTDs designed to operate using air-cleaning technologies. This protocol has multiple applications and can be used by manufacturers to evaluate prototype CSTDs, by consumers to compare CSTD products, or by jurisdictions wishing to adopt the protocol for a CSTD performance certification procedure.

A panel consisting of peer reviewers and stakeholders was asked to review and comment on the draft guidance document and protocol. NIOSH reviewed the recommendations of the peer reviewers and stakeholders then made the final determination regarding document content as well as the decision not to propose a specific pass/fail performance threshold. The protocol is being published for comment in CDC–2015–0075 and Docket Number NIOSH–288 and can be found at *www.regulations.gov.*

Dated: September 1, 2015.

John Howard,

Director, National Institute for Occupational Safety and Health, Centers for Disease Control and Prevention.

[FR Doc. 2015–22525 Filed 9–4–15; 8:45 am]

BILLING CODE 4163–19–P

DEPARTMENT OF HEALTH AND HUMAN SERVICES

Centers for Medicare & Medicaid Services

[Document Identifier: CMS–10221]

Agency Information Collection Activities: Submission for OMB Review; Comment Request

ACTION: Notice.

SUMMARY: The Centers for Medicare & Medicaid Services (CMS) is announcing an opportunity for the public to comment on CMS' intention to collect information from the public. Under the Paperwork Reduction Act of 1995 (PRA), federal agencies are required to publish notice in the **Federal Register** concerning each proposed collection of information, including each proposed extension or reinstatement of an existing collection of information, and to allow a second opportunity for public comment on the notice. Interested persons are invited to send comments regarding the burden estimate or any other aspect of this collection of information, including any of the following subjects: (1) The necessity and utility of the proposed information collection for the proper performance of the agency's functions; (2) the accuracy of the estimated burden; (3) ways to enhance the quality, utility, and clarity of the information to be collected; and (4) the use of automated collection techniques or other forms of information technology to minimize the information collection burden.

DATES: Comments on the collection(s) of information must be received by the OMB desk officer by October 8, 2015.

ADDRESSES: When commenting on the proposed information collections, please reference the document identifier or OMB control number. To be assured consideration, comments and recommendations must be received by the OMB desk officer via one of the following transmissions: OMB, Office of Information and Regulatory Affairs, Attention: CMS Desk Officer, Fax Number: (202) 395–5806 *OR* Email: *OIRA_ submission@omb.eop.gov.*

To obtain copies of a supporting statement and any related forms for the proposed collection(s) summarized in this notice, you may make your request using one of following:

1. Access CMS' Web site address at *http://www.cms.hhs.gov/PaperworkReductionActof1995.*
2. Email your request, including your address, phone number, OMB number, and CMS document identifier, to *Paperwork@cms.hhs.gov.*
3. Call the Reports Clearance Office at (410) 786–1326.

FOR FURTHER INFORMATION CONTACT: Reports Clearance Office at (410) 786–1326.

SUPPLEMENTARY INFORMATION: Under the Paperwork Reduction Act of 1995 (PRA) (44 U.S.C. 3501–3520), federal agencies must obtain approval from the Office of Management and Budget (OMB) for each collection of information they conduct or sponsor. The term ''collection of information'' is defined in 44 U.S.C. 3502(3) and 5 CFR 1320.3(c) and includes agency requests or requirements that members of the public submit reports, keep records, or provide information to a third party. Section 3506(c)(2)(A) of the PRA (44 U.S.C. 3506(c)(2)(A)) requires federal agencies to publish a 30-day notice in the **Federal Register** concerning each proposed collection of information, including each proposed extension or reinstatement of an existing collection of information, before submitting the collection to OMB for approval. To comply with this requirement, CMS is publishing this notice that summarizes the following proposed collection(s) of information for public comment:

1. *Type of Information Collection Request:* Reinstatement without change of a previously approved collection; *Title of Information Collection:* Site Investigation for Independent Diagnostic Testing Facilities (IDTFs); *Use:* We enroll Independent Diagnostic Testing Facilities (IDTFs) into the Medicare program via a uniform application, the CMS 855B. Implementation of enhanced procedures for verifying the enrollment information has improved the enrollment process as well as identified and prevented fraudulent IDTFs from entering the Medicare program. As part of this process, verification of compliance with IDTF performance standards is necessary. The primary function of the site investigation form for IDTFs is to provide a standardized, uniform tool to gather information from an IDTF that tells us whether it meets certain standards to be a IDTF (as found in 42 CFR 410.33(g)) and where it practices or renders its services. The site investigation form has been used in the past to aid in verifying compliance with the required performance standards found in 42 CFR 410.33(g). No revisions have been made to this form since the last submission for OMB approval. *Form Number:* CMS–10221 (OMB Control Number: 0938–1029); *Frequency:* Occasionally; *Affected Public:* Private Sector (Business or other for-profits and Not-for-profit institutions); *Number of Respondents:* 900; *Total Annual Responses:* 900; *Total Annual Hours:* 1,800. (For policy questions regarding this collection contact Kim McPhillips at 410–786–5374).

Dated: September 2, 2015.

William N. Parham, III,

Director, Paperwork Reduction Staff, Office of Strategic Operations and Regulatory Affairs.

[FR Doc. 2015–22530 Filed 9–4–15; 8:45 am]

BILLING CODE 4120–01–P

DEPARTMENT OF HEALTH AND HUMAN SERVICES

Administration for Children and Families

Submission for OMB Review; Comment Request

Title: Tribal TANF Data Report, TANF Annual Report, and Reasonable Cause/ Corrective Action Documentation Process- Final.

OMB No.: 0970–0215.

Description: 42 U.S.C. 612 (section 412 of the Social Security Act as amended by Public Law 104–193, the Personal Responsibility and Work Opportunity Reconciliation Act of 1996 (PRWORA)), mandates that federally recognized Indian Tribes with an approved Tribal TANF program collect and submit to the Secretary of the Department of Health and Human Services data on the recipients served by the Tribes' programs. This information includes both aggregated and disaggregated data on case characteristics and individual characteristics. In addition, Tribes that are subject to a penalty are allowed to provide reasonable cause justifications as to why a penalty should not be imposed or may develop and implement corrective compliance procedures to eliminate the source of the penalty. Finally, there is an annual report, which requires the Tribes to describe program characteristics. All of the above requirements are currently approved by OMB and the Administration for Children and Families is simply proposing to extend them without any changes.

Respondents: Indian Tribes.

ANNUAL BURDEN ESTIMATES

Instrument	Number of respondents	Number of responses per respondent	Average burden hours per response	Total burden hours
Final Tribal TANF Data Report	70	4	451	126,280
Tribal TANF Annual Report	70	1	40	2,800
Tribal TANF Reasonable Cause/Corrective	70	1	60	4,200

Estimated Total Annual Burden Hours: 133,280.

Additional Information: Copies of the proposed collection may be obtained by writing to the Administration for Children and Families, Office of Planning, Research and Evaluation, 370 L'Enfant Promenade, SW., Washington, DC 20447, Attn: ACF Reports Clearance Officer. All requests should be identified by the title of the information collection. Email address: *infocollection@acf.hhs.gov.*

OMB Comment: OMB is required to make a decision concerning the collection of information between 30 and 60 days after publication of this document in the **Federal Register**. Therefore, a comment is best assured of having its full effect if OMB receives it within 30 days of publication. Written comments and recommendations for the proposed information collection should be sent directly to the following: Office of Management and Budget, Paperwork Reduction Project, Fax: 202–395–7285, Email: *OIRA_SUBMISSION@ OMB.EOP.GOV.* Attn: Desk Officer for the Administration for Children and Families.

Robert Sargis,

Reports Clearance Officer.

[FR Doc. 2015–22041 Filed 9–4–15; 8:45 am]

BILLING CODE 4184–01–P

DEPARTMENT OF HEALTH AND HUMAN SERVICES

Administration for Children and Families

Submission for OMB Review; Comment Request

Title: Child Care and Development Fund Annual Aggregate Report—ACF–800.

OMB No.: 0970–0150.

Description: Description: Section 658K of the Child Care and Development Block Grant (CCDBG) Act (42 U.S.C. 9858, as amended by Pub. L. 113–186) requires that States and Territories submit annual aggregate data on the children and families receiving direct services under the Child Care and Development Fund. The implementing regulations for the statutorily required reporting are at 45 CFR 98.70 and 98.71. Annual aggregate reports include data elements represented in the ACF–800 reflecting the scope, type, and methods of child care delivery. This provides ACF with the information necessary to make reports to Congress, address national child care needs, offer technical assistance to grantees, meet performance measures, and conduct research.

Consistent with the recent reauthorization of the CCDBG statute, ACF requests reinstatement and revision of the ACF–800 including a number of changes and clarifications to the reporting requirements and instructions. Most notably, section 658K(a)(2)(F) of the CCDBG Act now requires States to report the number of fatalities occurring among children while in the care and facility of child care providers serving CCDF children. The new data element will be required with the reporting period beginning on October 1 of 2015 (FFY 2016).

Respondents: States, the District of Columbia, and Territories including Puerto Rico, Guam, the Virgin Islands, American Samoa, and the Northern Marianna Islands.

ANNUAL BURDEN ESTIMATES

Instrument	Number of respondents	Number of responses per respondent	Average burden hours per response	Total burden hours
ACF–800	56	1	42	2,352

Estimated Total Annual Burden Hours: 2,352.

Additional Information: Copies of the proposed collection may be obtained by writing to the Administration for Children and Families, Office of Planning, Research and Evaluation, 370 L'Enfant Promenade SW., Washington, DC 20447, Attn: ACF Reports Clearance Officer. All requests should be identified by the title of the information collection. Email address: *infocollection@acf.hhs.gov.*

OMB Comment: OMB is required to make a decision concerning the collection of information between 30 and 60 days after publication of this document in the **Federal Register**. Therefore, a comment is best assured of having its full effect if OMB receives it within 30 days of publication. Written comments and recommendations for the proposed information collection should be sent directly to the following: Office of Management and Budget, Paperwork Reduction Project, Email: *OIRA_SUBMISSION@OMB.EOP.GOV,* Attn: Desk Officer for the Administration for Children and Families.

Robert Sargis,

Reports Clearance Officer.

[FR Doc. 2015–22571 Filed 9–4–15; 8:45 am]

BILLING CODE 4184–01–P

DEPARTMENT OF HEALTH AND HUMAN SERVICES

Administration for Children and Families

Proposed Information Collection Activity; Comment Request

Proposed Projects: ORR, Unaccompanied Children's Program, Division of Children's Services (DCS)

Title: Information Collection and Record Keeping for the Timely Placement and Release of Unaccompanied Children (UC) in ORR Care

OMB No.:

Description:

On March 1, 2003, the Homeland Security Act of 2002, Section 462, transferred responsibilities for the care and placement of unaccompanied children from the Commissioner of the Immigration and Naturalization Service to the Director of the Office of Refugee Resettlement (ORR). ORR is also governed by the provisions established by the Flores Agreement in 1997 and the William Wilberforce Trafficking Victims Protection Reauthorization Act (TVPRA) of 2008.

The ORR Unaccompanied Children's Program provides placement, care, custody and services for UC until they can be successfully released to a sponsor, are repatriated to their home country, or able to obtain legal status.

Through cooperative agreements and contracts, ORR funds residential care providers that provide temporary housing and other services to unaccompanied children in ORR custody. These care provider facilities are State licensed and must meet ORR requirements to ensure a high level quality of care. They provide a continuum of care for children, including placements in ORR foster care, group homes, shelter, staff secure, secure, and residential treatment centers. The care providers provide children with classroom education, health care, socialization/recreation, vocational training, mental health services, access to legal services, and case management.

Under the law, ORR and its care providers are required to:

(1) Collect information about each UC who is entrusted to the care of ORR in order to determine the most appropriate and least restrictive placement, provide adequate services, and identify qualified sponsors for the timely release of the child or youth. ORR has developed instruments to assess the child or youth and his or her needs and conditions throughout his or her stay with ORR as well as the identification and assessment of potential sponsors. These instruments allow for consistency and compliance of standards across care providers and help ORR monitor programs and identify problems and issues that need corrective action.

(2) Keep up-to-date records to ensure the child or youth's safety and security and care and to provide accountability with all Federal and State, licensing, and other standards by care providers.

(3) Notify UC of their rights and responsibilities under the law, including notice about ORR services, the fact that that they have the right to apply for Special Immigrant Juvenile (SIJ) status, and their legal responsibility to attend an immigration hearing.

These tasks are mainly conducted through the ORR online database (The UC Portal), which provides a central location for case records and the documentation of other activities (for example, when a child or youth is transferred to another facility). Many of these records are ''auto-populated'' on the UC Portal once the original data points are completed (such as DOB, A number, date of initial placement).

The data collection described here pertains to activities involving UC and care providers from initial intakes of UC into ORR care to his or her release from ORR care. It does not cover information collection for potential sponsors (Submitted via separate OMB request in January 2015.)

ORR has applied the following assumptions to this request:

(1) Items related to tasks that are routine and customary for care providers and others are excluded. This includes quarterly or annual financial or other reports, grant related requests from ORR Project Officers or others for monitoring performance and progress, and third party notifications to other government agencies, such as U.S. Department of Homeland Security (DHS) or U.S. Department of Justice (DOJ). (For financial and other reports, Care Providers use templates posted on *http://www.acf.hhs.gov/grants/grants_resources.html#reporting*)

(2) Data collection and reporting requirements do not reflect those required by State or local licensing or accreditation requirements.

(3) Acknowledgement of receipt of information or other acknowledgements via signature by either the UC or the care provider or others are not included in this information request as these are administrative in nature in order to help care providers and UC track personal belongings, DHS related documents, medical records, and other important items required by the UC following release from ORR care.

The components of this information request include:

(1) UC Portal Capacity Report: Care providers complete the sections on ''In Care'' and ''Beds in Reserve'' as well as the section recording the UC who have been discharged on a daily basis so that ORR Intakes has a complete picture of available beds for UC placements.

(2) The Further Assessment Swift Track (FAST) Placement Tool (Versions for Secure and Staff Secure placements): Initially used by ORR Intakes to determine when a UC warrants a placement in Secure or Staff Secure Care. Care providers must use the tool to update a status for UC who are placed in Secure Care at least every 30 days. (Care providers are not required to re-use tool for UC who have been placed in Staff Secure Care).

(3) Placement Authorization: Auto-generated. Requires a signature from the care provider acknowledging a particular UC placement into their facility.

(4) Notice of Placement in Secure or Staff Secure Facility: Acknowledges UC's placement in a secure or staff secure care provider facility with signature of UC and facility witness.

(5) Initial Intakes Assessment: Biographical information is auto-

populated for care providers based on ORR information obtained at Intakes. Screens for trafficking or other safety concerns, special needs, danger to self and others, medical conditions, mental health concerns.

(6) UC Assessment: Care provider must complete within 7 days of UC's admission, covers biographic, family, legal, migration, medical, substance abuse, and mental health history.

(7) Individual Service Plan: Documents the services that have been provided (for example, number of counseling sessions, educational assessment and classes) and is updated every 30 days. When a child is transferred to a new facility, a new ISP is developed.

(8) UC Case Review Form: Documents any new information not indicated in the UC Assessment.

(9) New Sponsor Form: Identifies any potential sponsor(s) for a particular UC. In addition to serving as a record for a particular case, helps ORR track individuals who are attempting to sponsor numerous UC, which may suggest a possible trafficking or abuse situation.

(10) Transfer Request and Tracking Form: Auto-populated and used to obtain ORR permission for transfer to another care facility. (Filled out by both ORR and care providers) and used to document when a UC is transferred from one facility to another (requires signatures of both facilities).

(11) Long Term Foster Care Placement Memo: When ORR identifies a placement of a UC with a long term foster care facility, the long term foster care provider or national VOLAG receiving the transfer request completes the memo and sends to ORR to ensure continuity of services and tracking of records for a UC.

(12) Travel Request form for UC Long Term Foster Care: Must be filled out by program at least 10 days prior to travel start date.

(13) Notice of Transfer to ICE Chief Counsel and Change of Address: Required so that the Chief Counsel of ICE may file a Motion for Change of Venue and/or Change of Address with the Executive Office for Immigration Review (EOIR), if applicable, to ensure immigration hearing may proceed.

(14) Care Provider Release Checklist: Care providers must complete and affirm that all documents, forms, and steps are completed in the release process.

(15) Release Request: Provides care provider recommendation for release of a UC to a sponsor. All releases must be approved by ORR prior to UC release.

(16) Discharge Notification: Includes date and type of discharge (transfer, home country, sponsor release) and is sent to ICE.

(17) Verification of Release: Signed by sponsor as notification that named UC has been released according to the law. Sponsor must also acknowledge agreement with the provisions of the Sponsor Care Agreement pertaining to the minor's care, safety, and well-being, and the sponsor's responsibility for ensuring the minor's presence at all future proceedings before the Department of Homeland Security and EOIR.

(18) Child Advocate Referral and Appointment Form: Used by the Child Advocate Program to recommend that ORR appoint an independent child advocate for a victim of child trafficking or in other cases involving vulnerable children.

(19) Notice of Rights Handout and Notice of Rights and Provision of Services: Care providers are required to provide to all UC under the Flores v. Reno Settlement Agreement.

(20) Legal Service Provider List for UC: List of organizations who offer free legal representation and help for UC with State and Federal courts, immigration hearings, and appeals. Required under the Flores Settlement Agreement.

(21) URM Application: Certain populations of children and youth in ORR custody may become eligible for the Unaccompanied Refugee Minors Program, which is a State administered foster care program. In such instances the care provider facility or other interested party may complete this application form on behalf of the child.

(22) Withdrawal of Application or Declination of Placement Form: If a youth who has submitted an application for the URM Program wishes to withdraw this application, or if he or she has been offered placement and wishes to decline this placement, the youth must complete this form.

(23) Standard Shelter Tour Request: Used by members of the public and the media to submit to care providers in order to tour a shelter facility.

Respondents: UC in ORR care and custody (they are generally referred to ORR from the DHS) and who are then referred to ORR's Network of Care Providers.

Staff in ORR's Care Provider Network, including those in shelter care, secure and staff secure care, foster care, and residential treatment centers.

Approved sponsors of UC released from ORR care.

ANNUAL BURDEN ESTIMATES

Instrument	Number of respondents	Number of responses per respondent	Average burden hours per response	Total burden hours
UC Portal Capacity Report	50	1	.16/hour	8
Further Assessment Swift Track (FAST) Placement Tool	2,320	1	.25/hour	580
Placement Authorization Form	58,000	1	.1/hour	5,800
Notice of Placement in Secure or Staff Secure Facility	2,320	1	.1/hour	232
Initial Intakes Form	58,000	1	.25/hour	14,500
UC Assessment	58,000	1	.50/hour	29,000
Individual Service Plan	58,000	1	.25	14,500
UC Case Review Form	58,000	1	.50/hour	29,000
New Sponsor Form	55,200	1	.25/hour	13,800
Transfer Request and Tracking Form	1,000	1	.25/hour	250
Long Term Foster Care Placement Memo	279	1	.1/hour	28
Travel Request Form for UC Long Term Foster Care	20	1	.25/hour	5
Notice of Transfer to ICE Chief Counsel and Change of Address	2,320	1	.1/hour	232
Care Provider Release Checklist	55,200	1	.1	5,520
Release Request	55,200	3	.25 hour	41,400
Discharge Notification	716	1	.25/hour	179
Verification of Release	55,200	1	.1/hour	5,520
Child Advocate Referral and Appointment Form	250	1	.50	125
Notice of Rights Handout and Notice of Rights and Provision of Services	58,000	1	.1/hour	5,800

ANNUAL BURDEN ESTIMATES—Continued

Instrument	Number of respondents	Number of responses per respondent	Average burden hours per response	Total burden hours
Legal Service Provider List for UC	58,000	1	.1	5,800
URM Application	350	1	1	350
Withdrawal of Application or Declination of Placement Form	10	1	.1/hour	1
Standard Shelter Tour Request	60	1	.1/hour	6

Estimated Total Annual Burden Hours: 172,636.

In compliance with the requirements of Section 506(c)(2)(A) of the Paperwork Reduction Act of 1995, the Administration for Children and Families is soliciting public comment on the specific aspects of the information collection described above. Copies of the proposed collection of information can be obtained and comments may be forwarded by writing to the Administration for Children and Families, Office of Planning, Research and Evaluation, 370 L'Enfant Promenade SW., Washington, DC 20447, Attn: ACF Reports Clearance Officer. Email address: *infocollection@acf.hhs.gov.* All requests should be identified by the title of the information collection.

The Department specifically requests comments on: (a) Whether the proposed collection of information is necessary for the proper performance of the functions of the agency, including whether the information shall have practical utility; (b) the accuracy of the agency's estimate of the burden of the proposed collection of information; (c) the quality, utility, and clarity of the information to be collected; and (d) ways to minimize the burden of the collection of information on respondents, including through the use of automated collection techniques or other forms of information technology. Consideration will be given to comments and suggestions submitted within 60 days of this publication.

Robert Sargis,

Reports Clearance Officer.

[FR Doc. 2015–22495 Filed 9–4–15; 8:45 am]

BILLING CODE 4184–01–P

DEPARTMENT OF HEALTH AND HUMAN SERVICES

Food and Drug Administration

[Docket No. FDA–2012–N–0961]

Agency Information Collection Activities; Proposed Collection; Comment Request; Environmental Impact Considerations

AGENCY: Food and Drug Administration, HHS.

ACTION: Notice.

SUMMARY: The Food and Drug Administration (FDA) is announcing an opportunity for public comment on the proposed collection of certain information by the Agency. Under the Paperwork Reduction Act of 1995 (the PRA), Federal Agencies are required to publish notice in the **Federal Register** concerning each proposed collection of information, including each proposed extension of an existing collection of information, and to allow 60 days for public comment in response to the notice. This notice solicits comments on the information collection entitled ''Environmental Impact Considerations.''

DATES: Submit either electronic or written comments on the collection of information by November 9, 2015.

ADDRESSES: Submit electronic comments on the collection of information to: *http://www.regulations.gov.* Submit written comments on the collection of information to the Division of Dockets Management (HFA 305), Food and Drug Administration, 5630 Fishers Lane, Rm. 1061, Rockville, MD 20852. All comments should be identified with the docket number found in brackets in the heading of this document.

FOR FURTHER INFORMATION CONTACT: FDA PRA Staff, Office of Operations, Food and Drug Administration, 8455 Colesville Rd., COLE–14526, Silver Spring, MD 20993–0002, *PRAStaff@fda.hhs.gov.*

SUPPLEMENTARY INFORMATION: Under the PRA (44 U.S.C. 3501–3520), Federal Agencies must obtain approval from the Office of Management and Budget (OMB) for each collection of information they conduct or sponsor. ''Collection of information'' is defined in 44 U.S.C. 3502(3) and 5 CFR 1320.3(c) and includes Agency requests or requirements that members of the public submit reports, keep records, or provide information to a third party. Section 3506(c)(2)(A) of the PRA (44 U.S.C. 3506(c)(2)(A)) requires Federal Agencies to provide a 60-day notice in the **Federal Register** concerning each proposed collection of information, including each proposed extension of an existing collection of information, before submitting the collection to OMB for approval. To comply with this requirement, FDA is publishing notice of the proposed collection of information listed below.

With respect to the following collection of information, FDA invites comments on these topics: (1) Whether the proposed collection of information is necessary for the proper performance of FDA's functions, including whether the information will have practical utility; (2) the accuracy of FDA's estimate of the burden of the proposed collection of information, including the validity of the methodology and assumptions used; (3) ways to enhance the quality, utility, and clarity of the information to be collected; and (4) ways to minimize the burden of the collection of information on respondents, including through the use of automated collection techniques, when appropriate, and other forms of information technology.

Environmental Impact Considerations—21 CFR Part 25

OMB Control Number 0910–0322

FDA is requesting OMB approval for the reporting requirements contained in the FDA collection of information ''Environmental Impact Considerations.'' The National Environmental Policy Act (NEPA) (42 U.S.C. 4321–4347) states national environmental objectives and imposes upon each Federal Agency the duty to consider the environmental effects of its actions. Section 102(2)(C) of NEPA requires the preparation of an

environmental impact statement (EIS) for every major Federal action that will significantly affect the quality of the human environment.

FDA's NEPA regulations are in part 25 (21 CFR part 25). All applications or petitions requesting Agency action require the submission of a claim for categorical exclusion or an environmental assessment (EA). A categorical exclusion applies to certain classes of FDA-regulated actions that usually have little or no potential to cause significant environmental effects and are excluded from the requirements to prepare an EA or EIS. Sections 25.15(a) and (d) specifies the procedures for submitting to FDA a claim for a categorical exclusion. Extraordinary circumstances (§ 25.21), which may result in significant environmental impacts, may exist for some actions that are usually categorically excluded. An EA provides information that is used to determine whether an FDA action could result in a significant environmental impact. Sections 25.40(a) and (c) specifies the content requirements for EAs for non-excluded actions.

This collection of information is used by FDA to assess the environmental impact of Agency actions and to ensure that the public is informed of environmental analyses. Firms wishing to manufacture and market substances regulated under statues for which FDA is responsible must, in most instances, submit applications requesting approval. Environmental information must be included in such applications for the purpose of determining whether the proposed action may have a significant impact on the environment. Where significant adverse events cannot be avoided, the Agency uses the submitted information as the basis for preparing and circulating to the public an EIS, made available through a **Federal Register** document also filed for comment at the Environmental Protection Agency. The final EIS, including the comments received, is reviewed by the Agency to weigh environmental costs and benefits in determining whether to pursue the proposed action or some alternative that would reduce expected environmental impact.

Any final EIS would contain additional information gathered by the Agency after the publication of the draft EIS, a copy or a summary of the comments received on the draft EIS, and the Agency's responses to the comments, including any revisions resulting from the comments or other information. When the Agency finds that no significant environmental effects are expected, the Agency prepares a finding of no significant impact.

FDA estimates the burden of this collection of information as follows:

Estimated Annual Reporting Burden for Human Drugs (Including Biologics in the Center for Drug Evaluation and Research)

Under 21 CFR 312.23(a)(7)(iv)(*c*), 314.50(d)(1)(iii), and 314.94(a)(9)(i), each investigational new drug application (IND), new drug application (NDA), and abbreviated new drug application (ANDA) must contain a claim for categorical exclusion under § 25.30 or § 25.31, or an EA under § 25.40. Annually, FDA receives approximately 3,677 INDs from 2501 sponsors; 120 NDAs from 87 applicants; 2,718 supplements to NDAs from 399 applicants; 9 biologic license applications (BLAs) from 8 applicants; 317 supplements to BLAs from 43 applicants; 1475 ANDAs from 300 applicants; and 5448 supplements to ANDAs from 318 applicants. FDA estimates that it receives approximately 13,663 claims for categorical exclusions as required under §§ 25.15(a) and (d), and 11 EAs as required under §§ 25.40(a) and (c). Based on information provided by the pharmaceutical industry, FDA estimates that it takes sponsors or applicants approximately 8 hours to prepare a claim for a categorical exclusion and approximately 3,400 hours to prepare an EA.

TABLE 1—ESTIMATED ANNUAL REPORTING BURDEN FOR HUMAN DRUGS [1]

21 CFR section	Number of respondents	Number of responses per respondent	Total annual responses	Average burden per response	Total hours
25.15(a) and (d)	3,416	4	13,664	8	109,312
25.40(a) and (c)	11	1	11	3,400	37,400
Total					146,712

[1] There are no capital costs or operating and maintenance costs associated with this collection of information.

Estimated Annual Reporting Burden for Human Foods

Under 21 CFR 71.1, 171.1, 170.39, and 170.100, food additive petitions, color additive petitions, requests from exemption from regulation as a food additive, and submission of a food contact notification for a food contact substance must contain either a claim of categorical exclusion under § 25.30 or § 25.32 or an EA under § 25.40. Annually, FDA receives approximately 97 industry submissions. FDA received an annual average of 42 claims of categorical exclusions as required under § 25.15(a) and (d) and 33 EAs as required under §§ 25.40(a) and (c). FDA estimates that approximately 42 respondents will submit an average of 1 application for categorical exclusion and 33 respondents will submit an average of 1 EA. FDA estimates that, on average, it takes petitioners, notifiers, or requestors approximately 8 hours to prepare a claim of categorical exclusion and approximately 210 hours to prepare an EA.

TABLE 2—ESTIMATED ANNUAL REPORTING BURDEN FOR HUMAN FOODS [1]

21 CFR section	Number of respondents	Number of responses per respondent	Total annual responses	Average burden per response	Total hours
25.15(a) and (d)	42	1	42	8	336
25.40(a) and (c)	33	1	33	210	6,930

TABLE 2—ESTIMATED ANNUAL REPORTING BURDEN FOR HUMAN FOODS [1]—Continued

21 CFR section	Number of respondents	Number of responses per respondent	Total annual responses	Average burden per response	Total hours
Total					7,266

[1] There are no capital costs or operating and maintenance costs associated with this collection of information.

Estimated Annual Reporting Burden for Medical Devices

Under 21 CFR 814.20(b)(11), premarket approvals (PMAs) (original PMAs and supplements) must contain a claim for categorical exclusion under § 25.30 or § 25.34 or an EA under § 25.40. In 2012 to 2014, FDA received an average of 39 claims (original PMAs and supplements) for categorical exclusions as required under §§ 25.15(a) and (d), and 0 EAs as required under §§ 25.40(a) and (c). FDA estimates that approximately 39 respondents will submit an average of 1 application for categorical exclusion annually. Based on information provided by sponsors, FDA estimates that it takes approximately 6 hours to prepare a claim for a categorical exclusion.

TABLE 3—ESTIMATED ANNUAL REPORTING BURDEN FOR MEDICAL DEVICES [1]

21 CFR section	Number of respondents	Number of responses per respondent	Total annual responses	Average burden per response	Total hours
25.15(a) and (d)	39	1	39	6	234

[1] There are no capital costs or operating and maintenance costs associated with this collection of information.

Estimated Annual Reporting Burden for Biological Products, Drugs, and Medical Devices in the Center for Biologics Evaluation and Research

Under 21 CFR 601.2(a), BLAs as well as INDs (§ 312.23), NDAs (§ 314.50), ANDAs (§ 314.94), and PMAs (§ 814.20) must contain either a claim of categorical exclusion under § 25.30 or 25.32 or an EA under § 25.40. Annually, FDA receives approximately 34 BLAs from 18 applicants, 801 BLA supplements to license applications from 156 applicants, 345 INDs from 256 sponsors, 1 NDA from 1 applicant, 26 supplements to NDAs from 8 applicants, 1 ANDA from 1 applicant, 1 supplement to ANDAs from 1 applicant, 8 PMAs from 3 applicants, and 33 PMA supplements from 16 applicants. FDA estimates that approximately 10 percent of these supplements would be submitted with a claim for categorical exclusion or an EA.

FDA has received approximately 481 claims for categorical exclusion as required under §§ 25.15(a) and (d) annually and 2 EAs as required under §§ 25.40(a) and (c) annually. Therefore, FDA estimates that approximately 247 respondents will submit an average of 2 applications for categorical exclusion and 2 respondents will submit an average of 1 EA. Based on information provided by industry, FDA estimates that it takes sponsors and applicants approximately 8 hours to prepare a claim of categorical exclusion and approximately 3,400 hours to prepare an EA for a biological product.

TABLE 4—ESTIMATED ANNUAL REPORTING BURDEN FOR BIOLOGICAL PRODUCTS[1]

21 CFR section	Number of respondents	Number of responses per respondent	Total annual responses	Average burden per response	Total hours
25.15(a) and (d)	247	2	494	8	3,952
25.40(a) and (c)	2	1	2	3,400	6,800
Total					10,752

[1] There are no capital costs or operating and maintenance costs associated with this collection of information.

Estimated Annual Reporting Burden for Animal Drugs

Under 21 CFR 514.1(b)(14), new animal drug applications (NADAs) and abbreviated new animal drug applications (ANADAs); 21 CFR 514.8(a)(1) supplemental NADAs and ANADAs; 21 CFR 511.1(b)(10) investigational new animal drug applications (INADs), and 21 CFR 571.1(c) food additive petitions must contain a claim for categorical exclusion under § 25.30 or 25.33 or an EA under § 25.40. Annually, FDA's Center for Veterinary Medicine has received approximately 698 claims for categorical exclusion as required under §§ 25.15(a) and (d), and 10 EAs as required under §§ 25.40(a) and (c). FDA estimates that approximately 70 respondents will submit an average of 10 applications for categorical exclusion and 10 respondents will submit an average of 1 EA. FDA estimates that it takes sponsors/applicants approximately 3 hours to prepare a claim of categorical exclusion and an average of 2,160 hours to prepare an EA.

TABLE 5—ESTIMATED ANNUAL REPORTING BURDEN FOR ANIMAL DRUGS [1]

21 CFR section	Number of respondents	Number of responses per respondent	Total annual responses	Average burden per response	Total hours
25.15(a) and (d)	70	10	700	3	2,100
25.40(a) and (c)	10	1	10	2,160	21,600
Total					23,700

[1] There are no capital costs or operating and maintenance costs associated with this collection of information.

Estimated Annual Reporting Burden for Tobacco Products

Under sections 905, 910, and 911 of the Federal Food, Drugs, and Cosmetic Act (21 U.S.C. 387, 387j, and 387k), product applications and supplements (PMTAs), SEs, Exemption from SEs, and modified risk tobacco products must contain a claim for categorical exclusion or an EA. In 2015, FDA estimated it will receive approximately 5 premarket review of new tobacco PMTAs from 5 respondents, 509 reports intended to demonstrate the substantial equivalence of a new tobacco product (SEs) from 509 respondents, 15 exemption from substantial equivalence requirements applications (SE Exemptions) from 15 respondents, and 3 modified risk tobacco product applications (MRTPAs) from 3 respondents. FDA is not accepting claims for categorical exclusions at this time, and estimates that there will be 532 EAs from 532 respondents as required under §§ 25.40(a) and (c). Therefore, over the next 3 years, FDA estimates that approximately 532 respondents will submit an average of 1 application for environmental assessment. Part of the information in the EA will be developed while writing other parts of a PMTA, SE, Exemption from SE, or MRTPA. Based on FDA's experience, previous information provided by potential sponsors and knowledge that part of the EA information has already been produced in one of the tobacco product applications, FDA estimates that it takes approximately 80 hours to prepare an EA.

TABLE 6—ESTIMATED ANNUAL REPORTING BURDEN FOR TOBACCO PRODUCTS [1]

21 CFR section	Number of respondents	Number of responses per respondent	Total annual responses	Average burden per response	Total hours
25.40(a) and (c)	532	1	532	80	42,560

[1] There are no capital costs or operating and maintenance costs associated with this collection of information.

Dated: August 31, 2015.

Leslie Kux,

Associate Commissioner for Policy.

[FR Doc. 2015–22507 Filed 9–4–15; 8:45 am]

BILLING CODE 4164–01–P

DEPARTMENT OF HEALTH AND HUMAN SERVICES

Food and Drug Administration

[Docket No. FDA–2011–D–0147]

Demonstrating the Substantial Equivalence of a New Tobacco Product: Responses to Frequently Asked Questions; Second Edition; Guidance for Industry; Availability

AGENCY: Food and Drug Administration, HHS.

ACTION: Notice.

SUMMARY: The Food and Drug Administration (FDA) is announcing a second edition of the guidance for industry entitled ''Demonstrating the Substantial Equivalence of a New Tobacco Product: Responses to Frequently Asked Questions''. FDA is issuing the second edition to provide further information on demonstrating substantial equivalence (SE) of a new tobacco product, including demonstrating SE when the new tobacco product has: A modified label that renders it distinct from, but has identical characteristics to, a valid predicate product; or a change in product quantity from, but where the per weight composition is identical to, a valid predicate product.

DATES: Submit either electronic or written comments on Agency guidances at any time.

ADDRESSES: All communications in response to this notice should be identified with Docket No. FDA–2011–D–0147. Submit electronic comments on the guidance to *http://www.regulations.gov.* Submit written comments to the Division of Dockets Management (HFA–305), Food and Drug Administration, 5630 Fishers Lane, Rm. 1061, Rockville, MD 20852.

FOR FURTHER INFORMATION CONTACT: Annette Marthaler, Center for Tobacco Products, Food and Drug Administration, Document Control Center, Bldg. 71, Rm. G335, 10903 New Hampshire Ave., Silver Spring, MD 20993–0002; 1–877–287–1373, *CTPRegulations@fda.hhs.gov,* or *annette.marthaler@fda.hhs.gov.*

SUPPLEMENTARY INFORMATION:

I. Background

We are announcing the availability of the second edition of the guidance for industry entitled ''Demonstrating the Substantial Equivalence of a New Tobacco Product: Responses to Frequently Asked Questions'' (second edition SE FAQ guidance). We are issuing this guidance consistent with our good guidance practices regulation (21 CFR 10.115).

In September 2011, FDA issued draft guidance responding to frequently asked questions covering a range of topics on demonstrating the SE of a new tobacco product (September 9, 2011, 76 FR 55927). In March 2015, FDA issued a final guidance on many of the topics included in the September 2011 draft ((March 5, 2015, 80 FR 12011) (March 2015 FAQ guidance)). In May 2015, FDA announced that an interim enforcement policy would be in effect while it considered comments submitted on the March 2015 FAQ guidance. This interim enforcement policy will continue to be in effect for 30 days from the date of issuance of the

second edition SE FAQ guidance. Based on the comments received on the September 2011 draft guidance and the March 2015 final guidance, we are now issuing the second edition FAQ final guidance.

The second edition FAQ guidance describes FDA's current thinking on whether and when a change to a tobacco product's label, product quantity in the package, additives, or specifications renders that product a ''new tobacco product'' subject to premarket review. It explains that a manufacturer may submit streamlined SE reports for certain modifications to labels and changes to product quantity. The guidance also explains FDA's plans and processes for review of the streamlined SE reports. Finally, this guidance responds to several questions that have been raised about the SE process more generally.

The guidance represents the current thinking of FDA on this topic. It does not establish any rights for any person and is not binding on FDA or the public. You can use an alternative approach if it satisfies the requirements of the applicable statutes and regulations.

II. Paperwork Reduction Act of 1995

This guidance refers to previously approved information collections. These collections of information are subject to review by the Office of Management and Budget (OMB) under the Paperwork Reduction Act of 1995 (44 U.S.C. 3501–3520). The collections of information in sections 905(j) and 910 of the FD&C Act (21 U.S.C. 387e(j) and 387j, respectively), as amended by the Tobacco Control Act (Pub. L. 111–31), have been approved under OMB control number 0910–0673; the collections of information in 21 CFR part 25 have been approved under OMB control number 0910–0322.

III. Comments

A. General Information About Submitting Comments

Interested persons may submit either electronic comments regarding this document to *http://www.regulations.gov* or written comments to the Division of Dockets Management (see **ADDRESSES**). It is only necessary to send one set of comments. Identify comments with the docket number found in brackets in the heading of this document.

B. Public Availability of Comments

Received comments may be seen in the Division of Dockets Management between 9 a.m. and 4 p.m., Monday through Friday, and will be posted to the docket at *http://www.regulations.gov.* As a matter of Agency practice, FDA generally does not post comments submitted by individuals in their individual capacity on *http://www.regulations.gov.* This is determined by information indicating that the submission is written by an individual, for example, the comment is identified with the category ''Individual Consumer'' under the field titled ''Category (Required),'' on the ''Your Information'' page on *http://www.regulations.gov.* For this document, however, FDA will not be following this general practice. Instead, FDA will post on *http://www.regulations.gov* comments to this docket that have been submitted by individuals in their individual capacity. If you wish to submit any information under a claim of confidentiality, please refer to 21 CFR 10.20.

C. Information Identifying the Person Submitting the Comment

Please note that your name, contact information, and other information identifying you will be posted on *http://www.regulations.gov* if you include that information in the body of your comments. For electronic comments submitted to *http://www.regulations.gov,* FDA will post the body of your comment on *http://www.regulations.gov* along with your state/province and country (if provided), the name of your representative (if any), and the category identifying you (*e.g.,* individual, consumer, academic, industry). For written submissions submitted to the Division of Dockets Management, FDA will post the body of your comments on *http://www.regulations.gov,* but you can put your name and/or contact information on a separate cover sheet and not in the body of your comments.

IV. Electronic Access

Persons with access to the Internet may obtain an electronic version of the guidance at either *http://www.regulations.gov* or *http://www.fda.gov/TobaccoProducts/GuidanceComplianceRegulatoryInformation/default.htm.*

Dated: August 27, 2015.

Leslie Kux,

Associate Commissioner for Policy.

[FR Doc. 2015–22494 Filed 9–4–15; 8:45 am]

BILLING CODE 4164–01–P

DEPARTMENT OF HEALTH AND HUMAN SERVICES

Health Resources and Services Administration

Agency Information Collection Activities: Proposed Collection: Public Comment Request

AGENCY: Health Resources and Services Administration, HHS.

ACTION: Notice.

SUMMARY: In compliance with the requirement for opportunity for public comment on proposed data collection projects (Section 3506(c)(2)(A) of the Paperwork Reduction Act of 1995), the Health Resources and Services Administration (HRSA) announces plans to submit an Information Collection Request (ICR), described below, to the Office of Management and Budget (OMB). Prior to submitting the ICR to OMB, HRSA seeks comments from the public regarding the burden estimate, below, or any other aspect of the ICR.

DATES: Comments on this Information Collection Request must be received no later than November 9, 2015.

ADDRESSES: Submit your comments to *paperwork@hrsa.gov* or mail the HRSA Information Collection Clearance Officer, Room 10C–03, Parklawn Building, 5600 Fishers Lane, Rockville, MD 20857.

FOR FURTHER INFORMATION CONTACT: To request more information on the proposed project or to obtain a copy of the data collection plans and draft instruments, email *paperwork@hrsa.gov* or call the HRSA Information Collection Clearance Officer at (301) 443–1984.

SUPPLEMENTARY INFORMATION: When submitting comments or requesting information, please include the information request collection title for reference.

Information Collection Request Title: The Maternal, Infant, and Early Childhood Home Visiting Program Performance Measurement Information System.

OMB No. 0906–xxxx—New

Abstract: The Maternal, Infant, and Early Childhood Home Visiting Program (MIECHV), administered by HRSA in partnership with the Administration for Children and Families (ACF), supports voluntary, evidence-based home visiting services during pregnancy and to parents with young children up to kindergarten entry. States and Tribal entities are eligible to receive funding from the MIECHV Program and have the flexibility to tailor the program to serve the specific needs of their communities.

Need and Proposed Use of the Information: HRSA will use the proposed information to demonstrate program accountability and continuously monitor and provide oversight to Home Visiting Program grantees. The information will also be used to provide quality improvement guidance and technical assistance to grantees and help inform the development of early childhood systems at the national, state, and local level. HRSA is seeking to collect demographic, service utilization, and select clinical indicators for participants enrolled in home visiting services. In addition, HRSA will collect a set of standardized performance and outcome indicators that correspond with the statutorily identified benchmark areas.

Demographic, Service Utilization, and Clinical Indicators Data

These data will describe the population served by the MIECHV Program, including the unduplicated count of the number of participants and participant groups by primary insurance coverage. These data will provide other socio-demographic characteristics of program participants and their utilization of services, such as program retention. Additionally, these data will describe several select clinical indicators of program participants, such as the percent of eligible participants who deliver their child preterm. This information will be collected from participants once, at enrollment in home visiting services and aggregated and reported to HRSA by state/territory grantees once annually.

Performance and Outcome Benchmark Data

These data constitute a discrete set of standardized performance and outcome indicators that correspond with the statutorily identified benchmark areas. These data will provide aggregate totals, percentages, and rates for performance and outcome indicators that are salient to the MIECHV Program, home visiting services more generally, and the at-risk populations served. These data will be collected from participants based on the appropriate measurement period defined for each measure and aggregated and reported to HRSA by state/territory grantees once annually.

This information will be used to demonstrate accountability with legislative and programmatic requirements. It will also be used to monitor and provide continued oversight for grantee performance and to target technical assistance resources to grantees. In the future, it is anticipated the MIECHV funding decisions may be allocated based on grantee performance, including on benchmark performance areas.

Likely Respondents: Home Visiting Program grantees.

Burden Statement: Burden in this context means the time expended by persons to generate, maintain, retain, disclose or provide the information requested. This includes the time needed to review instructions; to develop, acquire, install and utilize technology and systems for the purpose of collecting, validating and verifying information, processing and maintaining information, and disclosing and providing information; to train personnel and to be able to respond to a collection of information; to search data sources; to complete and review the collection of information; and to transmit or otherwise disclose the information. The total annual burden hours estimated for this Information Collection Request are summarized in the table below.

TOTAL ESTIMATED ANNUALIZED BURDEN HOURS

Form name	Number of respondents	Number of responses per respondent	Total responses	Average burden per response (in hours)	Total burden hours
Form 1:					
Demographic, Service Utilization, and Clinical Indicators Data	56	1	56	650	36,400
Performance and Outcome Benchmark Data	56	1	56	200	11,200
Total	56		56		47,600

HHS specifically requests comments on (1) the necessity and utility of the proposed information collection for the proper performance of the agency's functions, (2) the accuracy of the estimated burden, (3) ways to enhance the quality, utility, and clarity of the information to be collected, and (4) the use of automated collection techniques or other forms of information technology to minimize the information collection burden.

Jackie Painter,

Director, Division of the Executive Secretariat.

[FR Doc. 2015–22545 Filed 9–4–15; 8:45 am]

BILLING CODE 4165–15–P

DEPARTMENT OF HEALTH AND HUMAN SERVICES

Indian Health Service

[OMB NO. 0917–0028]

Request for Public Comment: 30-Day Proposed Information Collection: Addendum to Declaration for Federal Employment, Child Care and Indian Child Care Worker Positions

AGENCY: Indian Health Service, HHS.

ACTION: Notice and request for comments. Request for extension of approval.

SUMMARY: In compliance with the Paperwork Reduction Act of 1995, Public Law (Pub. L.) 104–13 [44 United States Code (U.S.C.) section 3507(a)(1)(D)], the Indian Health Service (IHS) is submitting to the Office of Management and Budget (OMB) a request for an extension of a previously approved collection of information titled, ''Addendum to Declaration for Federal Employment, Child Care and Indian Child Care Worker Positions,'' Office of Management and Budget (OMB) Control Number 0917–0028, which expires November 30, 2015.

This previously approved information collection project was last published in the **Federal Register** (80 FR 43100) on July 21, 2015, and allowed 60 days for public comment, as required by 44 U.S.C. 3506(c)(2)(A). The IHS received no comments regarding this collection. The purpose of this notice is to solicit public comments on specific aspects of the proposed information collection, which are to be submitted directly to OMB for a 30 day period.

A copy of the supporting statement is available at *www.regulations.gov* (see Docket ID IHS–2015–0004).

Proposed Collection: Title: Addendum to Declaration for Federal Employment, Child Care and Indian Child Care Worker Positions (OMB No. 0917–0028). *Type of Information Collection Request:* Extension, without revision, of currently approved information collection, 0917–0028, Addendum to Declaration for Federal Employment, Child Care and Indian Child Care Worker Positions. There are no program changes or adjustments in burden hours. *Form(s):* Addendum to Declaration for Federal Employment, Child Care and Indian Child Care Worker Positions. *Need and Use of Information Collection:* This is a request for approval of the collection of information as required by section 408 of the Indian Child Protection and Family Violence Prevention Act, Public Law 101–630, 104 Stat. 4544, and 25 U.S.C. 3201–3211.

The IHS is required to compile a list of all authorized positions within the IHS where the duties and responsibilities involve regular contact with, or control over, Indian children; and to conduct an investigation of the character of each individual who is employed, or is being considered for employment in a position having regular contact with, or control over, Indian children [25 U.S.C. 3207(a)(1) and (2)]. Title 25 U.S.C. 3207(b) requires regulations prescribing the minimum standards of character to ensure that none of the individuals appointed to positions involving regular contact with, or control over, Indian children have been found guilty of, or entered a plea of nolo contendere or guilty to any felonious offense, or any of two or more misdemeanor offenses under Federal, State, or Tribal law involving crimes of violence; sexual assault, molestation, exploitation, contact or prostitution; crimes against persons; or offenses committed against children.

In addition, 42 U.S.C. 13041 requires each agency of the Federal Government, and every facility operated by the Federal Government (or operated under contract with the Federal Government), that hires (or contracts for hire) individuals involved with the provision of child care services to children under the age of 18 to assure that all existing and newly hired employees undergo a criminal history background check. The background investigation is to be initiated through the personnel program of the applicable Federal agency. This section requires employment applications for individuals who are seeking work for an agency of the Federal Government, or for a facility or program operated by (or through contract with) the Federal Government, in positions involved with the provision of child care services to children under the age of 18, to contain a question asking whether the individual has ever been arrested for or charged with a crime involving a child. *Affected Public:* Individuals and households. *Type of Respondents:* Individuals.

The table below provides: Types of data collection instruments, Estimated number of respondents, Number of responses per respondent, Average burden hour per response, and Total annual burden hour(s).

ESTIMATED ANNUAL BURDEN HOURS

Data collection instrument(s)	Number of respondents	Number of responses per respondent	Average burden per response (in hours)	Total annual burden responses (in hours)
Addendum to Declaration for Federal Employment (OMB 0917–0028)	3000	1	12/60	600
Total	3000			600

There are no Capital Costs, Operating Costs, and/or Maintenance Costs to report.

Requests for Comments: Your written comments and/or suggestions are invited on one or more of the following points:

(a) Whether the information collection activity is necessary to carry out an agency function;

(b) whether the agency processes the information collected in a useful and timely fashion;

(c) the accuracy of the public burden estimate (the estimated amount of time needed for individual respondents to provide the requested information);

(d) whether the methodology and assumptions used to determine the estimates are logical;

(e) ways to enhance the quality, utility, and clarity of the information being collected; and

(f) ways to minimize the public burden through the use of automated, electronic, mechanical, or other technological collection techniques or other forms of information technology.

Direct Your Comments to OMB: Send your comments and suggestions regarding the proposed information collection contained in this notice, especially regarding the estimated public burden and associated response time to: Office of Management and Budget, Office of Regulatory Affairs, New Executive Office Building, Room 10235, Washington, DC 20503, Attention: Desk Officer for IHS.

FOR FURTHER INFORMATION CONTACT: To request additional information, please contact Tamara Clay by one of the following methods:

- *Mail:* Tamara Clay, Information Collection Clearance Officer, Indian Health Service, 801 Thompson Avenue, TMP, STE 450–30, Rockville, MD 20852.
- *Phone:* 301–443–4750.
- *Email: Tamara.Clay@ihs.gov.*
- *Fax:* 301–443–4750.

Comment Due Date: October 8, 2015. Your comments regarding this information collection are best assured of having full effect if received within 30 days of the date of this publication.

Dated: August 29, 2015.

Robert G. McSwain,

Deputy Director, Indian Health Service.

[FR Doc. 2015–22532 Filed 9–4–15; 8:45 am]

BILLING CODE 4165–16–P

DEPARTMENT OF HEALTH AND HUMAN SERVICES

National Institutes of Health

Eunice Kennedy Shriver National Institute of Child Health and Human Development; Notice of Closed Meeting

Pursuant to section 10(d) of the Federal Advisory Committee Act, as amended (5 U.S.C. App.), notice is hereby given of the following meeting.

The meeting will be closed to the public in accordance with the provisions set forth in section 552b(c)(4) and 552b(c)(6), Title 5 U.S.C., as amended. The grant applications and the discussions could disclose confidential trade secrets or commercial

property such as patentable material, and personal information concerning individuals associated with the grant applications, the disclosure of which would constitute a clearly unwarranted invasion of personal privacy.

Name of Committee: National Institute of Child Health and Human Development Special Emphasis Panel; MFMU Network Review.

Date: November 19–20, 2015.

Time: 8 p.m. to 5 p.m.

Agenda: To review and evaluate grant applications.

Place: Residence Inn Bethesda Downtown, 7335 Wisconsin Ave., Bethesda, MD 20814.

Contact Person: Sheri A. Hild, Scientific Review Officer, Scientific Review Branch, Eunice Kennedy Shriver National Institute of Child Health and Human Development, NIH, 6100 Executive Boulevard, Room 5B01, Bethesda, MD 20892–9304, (301) 435–8382, *hildsa@mail.nih.gov.*

(Catalogue of Federal Domestic Assistance Program Nos. 93.864, Population Research; 93.865, Research for Mothers and Children; 93.929, Center for Medical Rehabilitation Research; 93.209, Contraception and Infertility Loan Repayment Program, National Institutes of Health, HHS)

Dated: September 1, 2015

Michelle Trout,

Program Analyst, Office of Federal Advisory Committee Policy.

[FR Doc. 2015–22500 Filed 9–4–15; 8:45 am]

BILLING CODE 4140–01–P

DEPARTMENT OF HEALTH AND HUMAN SERVICES

National Institutes of Health

National Center for Complementary and Integrative Health; Notice of Meeting

Pursuant to section 10(d) of the Federal Advisory Committee Act, as amended (5 U.S.C. App.), notice is hereby given of a meeting of the National Advisory Council for Complementary and Integrative Health.

The meeting will be open to the public as indicated below, with attendance limited to space available. Individuals who plan to attend and need special assistance, such as sign language interpretation or other reasonable accommodations, should notify the Contact Person listed below in advance of the meeting.

The meeting will be closed to the public in accordance with the provisions set forth in sections 552b(c)(4) and 552b(c)(6), Title 5 U.S.C., as amended. The grant applications and the discussions could disclose confidential trade secrets or commercial property such as patentable material, and personal information concerning individuals associated with the grant applications, the disclosure of which would constitute a clearly unwarranted invasion of personal privacy.

Name of Committee: National Advisory Council for Complementary and Integrative Health

Date: October 2, 2015

Closed: 8:30 a.m. to 10:00 a.m.

Agenda: To review and evaluate grant applications.

Place: National Institutes of Health, Building 31, Conference Room 10, 31 Center Drive, Bethesda, MD 20892.

Open: 10:00 a.m. to 3:35 p.m.

Agenda: Report from the Institute Director and other staff.

Place: National Institutes of Health, Building 31, Conference Room 10, 31 Center Drive, Bethesda, MD 20892.

Contact Person: Martin H. Goldrosen, Ph.D., Director, Division of Extramural Activities, National Center for Complementary and Integrative Health, NIH, 6707 Democracy Blvd., Ste. 401, Bethesda, MD 20892–5475, (301) 594–2014, *goldrosm@mail.nih.gov.*

Any interested person may file written comments with the committee by forwarding the statement to the Contact Person listed on this notice. The statement should include the name, address, telephone number and when applicable, the business or professional affiliation of the interested person.

In the interest of security, NIH has instituted stringent procedures for entrance onto the NIH campus. All visitor vehicles, including taxicabs, hotel, and airport shuttles will be inspected before being allowed on campus. Visitors will be asked to show one form of identification (for example, a government-issued photo ID, driver's license, or passport) and to state the purpose of their visit.

Information is also available on the Institute's/Center's home page: *https://nccih.nih.gov/about/naccih,* where an agenda and any additional information for the meeting will be posted when available.

(Catalogue of Federal Domestic Assistance Program Nos. 93.213, Research and Training in Complementary and Alternative Medicine, National Institutes of Health, HHS)

Dated: September 1, 2015.

Michelle Trout,

Program Analyst, Office of Federal Advisory Committee Policy.

[FR Doc. 2015–22503 Filed 9–4–15; 8:45 am]

BILLING CODE 4140–01–P

DEPARTMENT OF HEALTH AND HUMAN SERVICES

National Institutes of Health

Eunice Kennedy Shriver National Institute of Child Health and Human Development; Notice of Closed Meeting

Pursuant to section 10(d) of the Federal Advisory Committee Act, as amended (5 U.S.C. App.), notice is hereby given of the following meeting.

The meeting will be closed to the public in accordance with the provisions set forth in section 552b(c)(4) and 552b(c)(6), title 5 U.S.C., as amended. The grant applications and the discussions could disclose confidential trade secrets or commercial property such as patentable material, and personal information concerning individuals associated with the grant applications, the disclosure of which would constitute a clearly unwarranted invasion of personal privacy.

Name of Committee: National Institute of Child Health and Human Development Special Emphasis Panel; ''NRN'' RFA.

Date: November 17–18, 2015.

Time: 8 p.m. to 5 p.m.

Agenda: To review and evaluate grant applications.

Place: Doubletree Hotel Bethesda, (Formerly Holiday Inn Select), 8120 Wisconsin Ave., Bethesda, MD 20814.

Contact Person: Rita Anand, Ph.D., Scientific Review Officer, Scientific Review Branch, Eunice Kennedy Shriver National Institute of Child Health and Human Development, NIH, 6100 Executive Boulevard, Room 5B01, Bethesda, MD 20892–9304, (301) 496–1487, *anandr@mail.nih.gov.*

(Catalogue of Federal Domestic Assistance Program Nos. 93.864, Population Research; 93.865, Research for Mothers and Children; 93.929, Center for Medical Rehabilitation Research; 93.209, Contraception and Infertility Loan Repayment Program, National Institutes of Health, HHS)

Dated: September 1, 2015.

Michelle Trout,

Program Analyst, Office of Federal Advisory Committee Policy.

[FR Doc. 2015–22499 Filed 9–4–15; 8:45 am]

BILLING CODE 4140–01–P

DEPARTMENT OF HEALTH AND HUMAN SERVICES

National Institutes of Health

Center for Scientific Review; Notice of Closed Meetings

Pursuant to section 10(d) of the Federal Advisory Committee Act, as amended (5 U.S.C. App.), notice is hereby given of the following meetings.

The meetings will be closed to the public in accordance with the provisions set forth in sections 552b(c)(4) and 552b(c)(6), Title 5 U.S.C., as amended. The grant applications and the discussions could disclose confidential trade secrets or commercial property such as patentable material, and personal information concerning individuals associated with the grant applications, the disclosure of which

would constitute a clearly unwarranted invasion of personal privacy.

Name of Committee: Center for Scientific Review Special Emphasis Panel; AREA: Oncological Sciences Grant Applications.
Date: September 24, 2015.
Time: 11:00 a.m. to 2:00 p.m.
Agenda: To review and evaluate grant applications.
Place: National Institutes of Health, 6701 Rockledge Drive, Bethesda, MD 20892 (Telephone Conference Call).
Contact Person: Sally A. Mulhern, Ph.D., Scientific Review Officer, Center for Scientific Review, National Institutes of Health, 6701 Rockledge Drive, Room 6214, MSC 7804, Bethesda, MD 20892, (301) 435–5877, *mulherns@csr.nih.gov*.

Name of Committee: Population Sciences and Epidemiology Integrated Review Group; Social Sciences and Population Studies A Study Section.
Date: October 1–2, 2015.
Time: 8:30 a.m. to 12:00 p.m.
Agenda: To review and evaluate grant applications.
Place: Residence Inn Bethesda, 7335 Wisconsin Avenue, Bethesda, MD 20814.
Contact Person: Suzanne Ryan, Ph.D., Scientific Review Officer, Center for Scientific Review, National Institutes of Health, 6701 Rockledge Drive, Room 3139, MSC 7770, Bethesda, MD 20892, (301) 435–1712, *ryansj@csr.nih.gov*.

Name of Committee: Cell Biology Integrated Review Group; Molecular and Integrative Signal Transduction Study Section.
Date: October 5–6, 2015.
Time: 8:00 a.m. to 12:00 p.m.
Agenda: To review and evaluate grant applications.
Place: Marines' Memorial Club and Hotel, 609 Sutter Street, San Francisco, CA 94102.
Contact Person: Raya Mandler, Ph.D., Scientific Review Officer, Center for Scientific Review, National Institutes of Health, 6701 Rockledge Drive, Room 5134, MSC 7840, Bethesda, MD 20892, (301) 402–8228, *rayam@csr.nih.gov*.

Name of Committee: Cell Biology Integrated Review Group; Development—2 Study Section.
Date: October 5–6, 2015.
Time: 8:00 a.m. to 1:00 p.m.
Agenda: To review and evaluate grant applications.
Place: Embassy Suites DC, 900 10th Street, Washington, DC 20001.
Contact Person: Rass M. Shayiq, Ph.D., Scientific Review Officer, Center for Scientific Review, National Institute of Health, 6701 Rockledge Drive, Room 2182, MSC 7818, Bethesda, MD 20892, (301) 435–2359, *shayiqr@csr.nih.gov*.

Name of Committee: Biobehavioral and Behavioral Processes Integrated Review Group; Motor Function, Speech and Rehabilitation Study Section.
Date: October 5, 2015.
Time: 8:00 a.m. to 6:00 p.m.
Agenda: To review and evaluate grant applications.
Place: Melrose Hotel, 2430 Pennsylvania Ave. NW., Washington, DC 20037.
Contact Person: Biao Tian, Ph.D., Scientific Review Officer, Center for Scientific Review, National Institutes of Health, 6701 Rockledge Drive, Room 3166, MSC 7848, Bethesda, MD 20892, 301–402–4411, *tianbi@csr.nih.gov*.

Name of Committee: Endocrinology, Metabolism, Nutrition and Reproductive Sciences Integrated Review Group; Clinical and Integrative Diabetes and Obesity Study Section.
Date: October 8–9, 2015.
Time: 8:00 a.m. to 6:00 p.m.
Agenda: To review and evaluate grant applications.
Place: The Allerton Hotel, 701 North Michigan Avenue, Chicago, IL 60611.
Contact Person: Hui Chen, MD, Scientific Review Officer, Center for Scientific Review, National Institutes of Health, 6701 Rockledge Drive, Bethesda, MD 20892, 301–435–1044, *chenhui@csr.nih.gov*.

Name of Committee: Musculoskeletal, Oral and Skin Sciences Integrated Review Group; Skeletal Biology Structure and Regeneration Study Section.
Date: October 13–14, 2015.
Time: 8:00 a.m. to 6:00 p.m.
Agenda: To review and evaluate grant applications.
Place: Warwick Seattle Hotel, 401 Lenora Street, Seattle, WA 98121.
Contact Person: Daniel F. McDonald, Ph.D., Scientific Review Officer, Center for Scientific Review, National Institutes of Health, 6701 Rockledge Drive, Room 4110, MSC 7814, Bethesda, MD 20892, (301) 435–1215, *mcdonald@csr.nih.gov*.

Name of Committee: Integrative, Functional and Cognitive Neuroscience Integrated Review Group; Somatosensory and Chemosensory Systems Study Section.
Date: October 15–16, 2015.
Time: 8:00 a.m. to 6:00 p.m.
Agenda: To review and evaluate grant applications.
Place: Doubletree Hotel Washington, 1515 Rhode Island Ave. NW., Washington, DC 20005.
Contact Person: M. Catherine Bennett, Ph.D., Scientific Review Officer, Center for Scientific Review, National Institutes of Health, 6701 Rockledge Drive, Room 5182, MSC 7846, Bethesda, MD 20892, 301–435–1766, *bennettc3@csr.nih.gov*.

Name of Committee: Biobehavioral and Behavioral Processes Integrated Review Group; Cognition and Perception Study Section.
Date: October 15–16, 2015.
Time: 8:00 a.m. to 5:00 p.m.
Agenda: To review and evaluate grant applications.
Place: Wyndham Grand Chicago Riverfront Hotel, 71 E Wacker Drive, Chicago, IL 60601.
Contact Person: Dana Jeffrey Plude, Ph.D., Scientific Review Officer, Center for Scientific Review, National Institutes of Health, 6701 Rockledge Drive, Room 3176, MSC 7848, Bethesda, MD 20892, (301) 435–2309, *pluded@csr.nih.gov*.

(Catalogue of Federal Domestic Assistance Program Nos. 93.306, Comparative Medicine; 93.333, Clinical Research, 93.306, 93.333, 93.337, 93.393–93.396, 93.837–93.844, 93.846–93.878, 93.892, 93.893, National Institutes of Health, HHS)

Dated: September 1, 2015.

Michelle Trout,

Program Analyst, Office of Federal Advisory Committee Policy.

[FR Doc. 2015–22504 Filed 9–4–15; 8:45 am]

BILLING CODE 4140–01–P

DEPARTMENT OF HEALTH AND HUMAN SERVICES

National Institutes of Health

Eunice Kennedy Shriver National Institute of Child Health and Human Development; Notice of Closed Meeting

Pursuant to section 10(d) of the Federal Advisory Committee Act, as amended (5 U.S.C. App.), notice is hereby given of the following meeting.

The meeting will be closed to the public in accordance with the provisions set forth in section 552b(c)(4) and 552b(c)(6), title 5 U.S.C., as amended. The grant applications and the discussions could disclose confidential trade secrets or commercial property such as patentable material, and personal information concerning individuals associated with the grant applications, the disclosure of which would constitute a clearly unwarranted invasion of personal privacy.

Name of Committee: National Institute of Child Health and Human Development Special Emphasis Panel.
Date: November 5, 2015.
Time: 1:30 p.m. to 4:30 p.m.
Agenda: To review and evaluate grant applications.
Place: National Institutes of Health, 6100 Executive Boulevard, Rockville, MD 20852, (Telephone Conference Call).
Contact Person: Peter Zelazowski, Ph.D., Scientific Review Officer, Scientific Review Branch, Eunice Kennedy Shriver National Institute of Child Health and Human Development, NIH, 6100 Executive Boulevard, Room 5B01, Bethesda, MD 20892–9304, (301) 435–6902, *peter.zelazowski@.nih.gov.*

(Catalogue of Federal Domestic Assistance Program Nos. 93.864, Population Research; 93.865, Research for Mothers and Children; 93.929, Center for Medical Rehabilitation Research; 93.209, Contraception and Infertility Loan Repayment Program, National Institutes of Health, HHS)

Dated: September 1, 2015.

Michelle Trout,

Program Analyst, Office of Federal Advisory Committee Policy.

[FR Doc. 2015–22498 Filed 9–4–15; 8:45 am]

BILLING CODE 4140–01–P

DEPARTMENT OF HEALTH AND HUMAN SERVICES

National Institutes of Health

Eunice Kennedy Shriver National Institute of Child Health and Human Development; Notice of Closed Meeting

Pursuant to section 10(d) of the Federal Advisory Committee Act, as amended (5 U.S.C. App.), notice is hereby given of the following meeting.

The meeting will be closed to the public in accordance with the provisions set forth in section 552b(c)(4) and 552b(c)(6), Title 5 U.S.C., as amended. The grant applications and the discussions could disclose confidential trade secrets or commercial property such as patentable material, and personal information concerning individuals associated with the grant applications, the disclosure of which would constitute a clearly unwarranted invasion of personal privacy.

Name of Committee: National Institute of Child Health and Human Development Special Emphasis Panel; Katanis P01 Teleconference Review.

Date: October 30, 2015.

Time: 11 a.m. to 2 p.m.

Agenda: To review and evaluate grant applications.

Place: National Institutes of Health, 6100 Executive Boulevard, Rockville, MD 20852, (Telephone Conference Call).

Contact Person: Sherry L. Dupere, Ph.D., Scientific Review Officer, Scientific Review Branch, Eunice Kennedy Shriver National Institute of Child Health and Human Development, NIH, 6100 Executive Boulevard, Room 5B01, Bethesda, MD 20892–9304, (301) 451–3415, *duperes@mail.nih.gov.*

(Catalogue of Federal Domestic Assistance Program Nos. 93.864, Population Research; 93.865, Research for Mothers and Children; 93.929, Center for Medical Rehabilitation Research; 93.209, Contraception and Infertility Loan Repayment Program, National Institutes of Health, HHS)

Dated: September 1, 2015.

Michelle Trout,

Program Analyst, Office of Federal Advisory Committee Policy.

[FR Doc. 2015–22502 Filed 9–4–15; 8:45 am]

BILLING CODE 4140–01–P

DEPARTMENT OF HEALTH AND HUMAN SERVICES

National Institutes of Health

Eunice Kennedy Shriver National Institute of Child Health and Human Development; Notice of Closed Meeting

Pursuant to section 10(d) of the Federal Advisory Committee Act, as amended (5 U.S.C. App.), notice is hereby given of the following meeting.

The meeting will be closed to the public in accordance with the provisions set forth in section 552b(c)(4) and 552b(c)(6), Title 5 U.S.C., as amended. The grant applications and the discussions could disclose confidential trade secrets or commercial property such as patentable material, and personal information concerning individuals associated with the grant applications, the disclosure of which would constitute a clearly unwarranted invasion of personal privacy.

Name of Committee: National Institute of Child Health and Human Development Special Emphasis Panel.

Date: November 16, 2015.

Time: 1:00 p.m. to 5:00 p.m.

Agenda: To review and evaluate grant applications.

Place: National Institutes of Health, 6100 Executive Boulevard, Rockville, MD 20852 (Telephone Conference Call).

Contact Person: Sherry L. Dupere, Ph.D., Scientific Review Officer, Scientific Review Branch, Eunice Kennedy Shriver National Institute of Child Health and Human Development, NIH, 6100 Executive Boulevard, Room 5B01, Bethesda, MD 20892–9304, (301) 451–3415, *duperes@mail.nih.gov*.

(Catalogue of Federal Domestic Assistance Program Nos. 93.864, Population Research; 93.865, Research for Mothers and Children; 93.929, Center for Medical Rehabilitation Research; 93.209, Contraception and Infertility Loan Repayment Program, National Institutes of Health, HHS)

Dated: September 1, 2015.

Michelle Trout,

Program Analyst, Office of Federal Advisory Committee Policy.

[FR Doc. 2015–22501 Filed 9–4–15; 8:45 am]

BILLING CODE 4140–01–P

DEPARTMENT OF HEALTH AND HUMAN SERVICES

National Institutes of Health

National Institute of Diabetes and Digestive and Kidney Diseases; Notice of Closed Meetings

Pursuant to section 10(d) of the Federal Advisory Committee Act, as amended (5 U.S.C. App.), notice is hereby given of the following meetings.

The meetings will be closed to the public in accordance with the provisions set forth in sections 552b(c)(4) and 552b(c)(6), title 5 U.S.C., as amended. The grant applications and the discussions could disclose confidential trade secrets or commercial property such as patentable material, and personal information concerning individuals associated with the grant applications, the disclosure of which would constitute a clearly unwarranted invasion of personal privacy.

Name of Committee: National Institute of Diabetes and Digestive and Kidney Diseases Special Emphasis Panel; NIDDK Clinical Study Planning.

Date: September 25, 2015.

Time: 9:00 a.m. to 12:00 p.m.

Agenda: To review and evaluate grant applications.

Place: National Institutes of Health, Two Democracy Plaza, 6707 Democracy Boulevard, Bethesda, MD 20892, (Telephone Conference Call).

Contact Person: Elena Sanovich, Ph.D., Scientific Review Officer, Review Branch, DEA, NIDDK, National Institutes of Health, Room 750, 6707 Democracy Boulevard, Bethesda, MD 20892–2542, 301–594–8886, *sanoviche@mail.nih.gov.*

Name of Committee: National Institute of Diabetes and Digestive and Kidney Diseases Special Emphasis Panel; PAR–12–265: NIDDK Ancillary Studies—HBV (R01).

Date: September 30, 2015.

Time: 1:00 p.m. to 2:30 p.m.

Agenda: To review and evaluate grant applications.

Place: National Institutes of Health, Two Democracy Plaza, 6707 Democracy Boulevard, Bethesda, MD 20892, (Telephone Conference Call).

Contact Person: Jian Yang, Ph.D., Scientific Review Officer, Review Branch, DEA, NIDDK, National Institutes of Health, Room 755, 6707 Democracy Boulevard, Bethesda, MD 20892–5452, (301) 594–7799, *yangj@extra.niddk.nih.gov.*

Name of Committee: National Institute of Diabetes and Digestive and Kidney Diseases Special Emphasis Panel; PAR–12–265: NIDDK Ancillary Studies—Adult Liver Failure (R01).

Date: September 30, 2015.

Time: 2:30 p.m. to 4:00 p.m.

Agenda: To review and evaluate grant applications.

Place: National Institutes of Health, Two Democracy Plaza, 6707 Democracy Boulevard, Bethesda, MD 20892, (Telephone Conference Call).

Contact Person: Jian Yang, Ph.D., Scientific Review Officer, Review Branch, DEA, NIDDK, National Institutes of Health, Room 755, 6707 Democracy Boulevard, Bethesda, MD 20892–5452, (301) 594–7799, *yangj@extra.niddk.nih.gov.*

(Catalogue of Federal Domestic Assistance Program Nos. 93.847, Diabetes, Endocrinology and Metabolic Research;

93.848, Digestive Diseases and Nutrition Research; 93.849, Kidney Diseases, Urology and Hematology Research, National Institutes of Health, HHS)

Dated: September 1, 2015.

David Clary,

Program Analyst, Office of Federal Advisory Committee Policy.

[FR Doc. 2015–22496 Filed 9–4–15; 8:45 am]

BILLING CODE 4140–01–P

DEPARTMENT OF HEALTH AND HUMAN SERVICES

National Institutes of Health

National Institute of Biomedical Imaging and Bioengineering; Notice of Closed Meeting

Pursuant to section 10(d) of the Federal Advisory Committee Act, as amended (5 U.S.C. App.), notice is hereby given of the following meeting.

The meeting will be closed to the public in accordance with the provisions set forth in sections 552b(c)(4) and 552b(c)(6), title 5 U.S.C., as amended. The grant applications and the discussions could disclose confidential trade secrets or commercial property such as patentable material, and personal information concerning individuals associated with the grant applications, the disclosure of which would constitute a clearly unwarranted invasion of personal privacy.

Name of Committee: National Institute of Biomedical Imaging and Bioengineering Special Emphasis Panel; Health Disparity SBIR Review (2016/01).

Date: October 23, 2015.

Time: 10 a.m. to 6 p.m.

Agenda: To review and evaluate grant applications.

Place: National Institutes of Health, Two Democracy Plaza, Suite 920, 6707 Democracy Boulevard, Bethesda, MD 20892, (Virtual Meeting).

Contact Person: Dennis Hlasta, Ph.D., Scientific Review Officer, 6707 Democracy Boulevard, Suite 952, Bethesda, MD 20892, 301–451–4794, *hlastadj@mail.nih.gov.*

Dated: September 1, 2015.

David Clary,

Program Analyst, Office of Federal Advisory Committee Policy.

[FR Doc. 2015–22497 Filed 9–4–15; 8:45 am]

BILLING CODE 4140–01–P

DEPARTMENT OF HOUSING AND URBAN DEVELOPMENT

[Docket No. FR–5885–N–01]

Proposed Fair Market Rents for the Housing Choice Voucher Program, Moderate Rehabilitation Single Room Occupancy Program and Other Programs; Fiscal Year 2016

AGENCY: Office of the Assistant Secretary for Policy Development and Research, HUD.

ACTION: Notice of Proposed Fiscal Year (FY) 2016 Fair Market Rents (FMRs).

SUMMARY: Section 8(c)(1) of the United States Housing Act of 1937 (USHA) requires the Secretary to publish FMRs periodically, but not less than annually, adjusted to be effective on October 1 of each year. The primary uses of FMRs are to determine payment standards for the Housing Choice Voucher (HCV) program, to determine initial renewal rents for some expiring project-based Section 8 contracts, to determine initial rents for housing assistance payment contracts in the Moderate Rehabilitation Single Room Occupancy program, and to serve as rent ceilings for rental assistance units in the HOME Investment Partnerships program. FMRs are used in the calculation of maximum award amounts for Continuum of Care grantees and are also used in the calculation of flat rents in Public Housing units. Today's notice provides proposed FY 2016 FMRs for all areas that reflect the estimated 40th and 50th percentile rent levels trended to April 1, 2016. The FY 2016 FMRs are based on ''5-year'' data collected by the American Community Survey (ACS) from 2009 through 2013. These data are updated by one-year 2013 ACS data for areas where statistically valid one-year ACS data is available. HUD continues to use ACS data in different ways according to the statistical reliability of rent estimates. The Consumer Price Index (CPI) rent and utility indexes are used to further update the data to 2014. These values are then trended forward to FY 2016 using the annualized change in median gross rents as measured across the most recent 5 years of available 1 year ACS data. While HUD will continue to use this trend factor for the calculation of FY 2016 FMRs, the Department is considering replacing it with a forward-looking forecast for the FY 2017 FMRs. For example, HUD is evaluating the use of a model that would forecast national rent and utility CPI indices based on economic assumptions used in the formulation of the President's Budget. HUD seeks public comments on this or alternative methodologies, as well as other data sources, for trending rent levels forward.

The proposed FY 2016 FMRs in this notice incorporate a change in the level of statistical reliability that is allowed for an ACS estimate to be used in the calculation of FMRs. Previously, if the error of the estimate was less than the estimate itself, HUD used the estimate. The Proposed FMRs in this notice use ACS estimates where the size of the error is limited to half of the estimate.

An additional change to the proposed FY 2016 FMRs is the incorporation of the February 28, 2013, Office of Management and Budget (OMB) metropolitan area definition update based on the 2010 Decennial Census data. The 2013 ACS data are the first to use the new area definitions in the compilation of the ACS data.

In a June 2, 2015 advanced notice of proposed rulemaking, HUD solicited comments on several topics related to the calculation of FMRs, including possible measures the Department is considering that would reduce the concentration of Section 8 voucher tenants. For example, HUD is evaluating alternatives to the current 50th percentile FMR program, which was implemented to mitigate excessive geographic concentration of voucher tenants. Comments were requested to determine interest in a program that is based on different measures for determining how many and which areas would receive special FMRs to encourage deconcentration, as well as on alternative FMR-based tools for promoting deconcentration, such as Small Area FMRs estimated at the ZIP code level. The Department appreciates the comments provided and is currently analyzing this input to inform the next steps in the rulemaking process. For the FY 2016 FMRs, however, the current 50th percentile FMR program is still in place with no change to existing regulations.

DATES: *Comment Due Date:* October 8, 2015.

ADDRESSES: Interested persons are invited to submit comments regarding the proposed FMRs to the Regulations Division, Office of General Counsel, Department of Housing and Urban Development, 451 Seventh Street SW., Room 10276, Washington, DC 20410–0001. Communications must refer to the above docket number and title and should contain the information specified in the ''Request for Comments'' section. There are two methods for submitting public comments.

1. Submission of Comments by Mail. Comments may be submitted by mail to

the Regulations Division, Office of General Counsel, Department of Housing and Urban Development, 451 7th Street SW., Room 10276, Washington, DC 20410–0500. Due to security measures at all federal agencies, however, submission of comments by mail often results in delayed delivery. To ensure timely receipt of comments, HUD recommends that comments submitted by mail be submitted at least two weeks in advance of the public comment deadline.

2. Electronic Submission of Comments. Interested persons may submit comments electronically through the Federal eRulemaking Portal at *http://www.regulations.gov.* HUD strongly encourages commenters to submit comments electronically. Electronic submission of comments allows the commenter maximum time to prepare and submit a comment, ensures timely receipt by HUD, and enables HUD to make them immediately available to the public. Comments submitted electronically through the *http://www.regulations.gov* Web site can be viewed by other commenters and interested members of the public. Commenters should follow instructions provided on that site to submit comments electronically.

Note: To receive consideration as public comments, comments must be submitted through one of the two methods specified above. Again, all submissions must refer to the docket number and title of the notice.

No Facsimile Comments. Facsimile (FAX) comments are not acceptable.

Public Inspection of Public Comments. All properly submitted comments and communications regarding this notice submitted to HUD will be available for public inspection and copying between 8 a.m. and 5 p.m. weekdays at the above address. Due to security measures at the HUD Headquarters building, an advance appointment to review the public comments must be scheduled by calling the Regulations Division at 202–708–3055 (this is not a toll-free number). Individuals with speech or hearing impairments may access this number through TTY by calling the Federal Relay Service at 800–877–8339. Copies of all comments submitted are available for inspection and downloading at *http://www.regulations.gov.*

FOR FURTHER INFORMATION CONTACT: For technical information on the methodology used to develop FMRs or a listing of all FMRs, please call the HUD USER information line at 800–245–2691 or access the information on the HUD USER Web site *http://www.huduser.org/portal/datasets/fmr.html.* FMRs are listed at the 40th or 50th percentile in Schedule B. For informational purposes, 40th percentile recent-mover rents for the areas with 50th percentile FMRs will be provided in the HUD FY 2016 FMR documentation system at *http://www.huduser.org/portal/datasets/fmr/fmrs/docsys.html&data=fmr16* and 50th percentile rents for all FMR areas will be published at *http://www.huduser.org/portal/datasets/50per.html* after publication of final FY 2016 FMRs.

Questions related to use of FMRs or voucher payment standards should be directed to the respective local HUD program staff. Questions on how to conduct FMR surveys may be addressed to Marie L. Lihn or Peter B. Kahn of the Economic and Market Analysis Division, Office of Economic Affairs, Office of Policy Development and Research at HUD headquarters [451 7th Street SW., Room 8208, Washington, DC 20410]; telephone number 202–402–2409 (this is not a toll-free number), or they may be reached at *emad-hq@hud.gov.* Persons with hearing or speech impairments may access HUD numbers through TTY by calling the toll-free Federal Relay Service at 800–877–8339.

Electronic Data Availability. This **Federal Register** notice will be available electronically from the HUD User page at *http://www.huduser.org/datasets/fmr.html.* **Federal Register** notices also are available electronically from *https://www.federalregister.gov/,* the U.S. Government Printing Office Web site. Complete documentation of the methodology and data used to compute each area's proposed FY 2016 FMRs is available at *http://www.huduser.org/portal/datasets/fmr/fmrs/docsys.html&data=fmr16.* Proposed FY 2016 FMRs are available in a variety of electronic formats at *http://www.huduser.org/datasets/fmr.html.* FMRs may be accessed in PDF format as well as in Microsoft Excel. Small Area FMRs based on proposed FY 2016 Metropolitan Area Rents are available in Microsoft Excel format at the same web address. Please note that these Small Area FMRs are only applicable to the public housing agencies (PHAs) participating in the Small Area FMR demonstration. Small Area FMRs for non-demonstration areas are available at: *http://www.huduser.org/portal/datasets/fmr/smallarea/index.html.*

SUPPLEMENTARY INFORMATION:

I. Background

Section 8 of the USHA (42 U.S.C. 1437f) authorizes housing assistance to aid lower-income families in renting safe and decent housing. Housing assistance payments are limited by FMRs established by HUD for different geographic areas. In the HCV program, the FMR is the basis for determining the ''payment standard amount'' used to calculate the maximum monthly subsidy for an assisted family (see 24 CFR 982.503). In general, the FMR for an area is the amount that would be needed to pay the gross rent (shelter rent plus utilities) of privately owned, decent, and safe rental housing of a modest (non-luxury) nature with suitable amenities is typically set at the 40th percentile of the distribution of gross rents. In addition, all rents subsidized under the HCV program must meet reasonable rent standards. HUD's regulations at 24 CFR 888.113 permit the Department to establish 50th percentile FMRs for certain areas.

II. Procedures for the Development of FMRs

Section 8(c)(1) of the USHA requires the Secretary of HUD to publish FMRs periodically, but not less frequently than annually. Section 8(c)(1) states, in part:

> Proposed fair market rentals for an area shall be published in the **Federal Register** with reasonable time for public comment and shall become effective upon the date of publication in final form in the **Federal Register**. Each fair market rental in effect under this subsection shall be adjusted to be effective on October 1 of each year to reflect changes, based on the most recent available data trended so the rentals will be current for the year to which they apply, of rents for existing or newly constructed rental dwelling units, as the case may be, of various sizes and types in the market area suitable for occupancy by persons assisted under this section.

HUD's regulations at 24 CFR part 888 provide that HUD will develop proposed FMRs, publish them for public comment, provide a public comment period of at least 30 days, analyze the comments, and publish final FMRs. (See 24 CFR 888.115.)

In addition, HUD's regulations at 24 CFR 888.113 set out procedures for HUD to assess whether areas are eligible for FMRs at the 50th percentile. Minimally qualified areas [1] are reviewed each year

[1] As defined in 24 CFR 888.113(c), a minimally qualified area is an area with at least 100 census tracts where 70 percent or fewer of the census tracts with at least 10 two bedroom rental units are census tracts in which at least 30 percent of the two bedroom rental units have gross rents at or below the two bedroom FMR set at the 40th percentile rent. This continues to be evaluated with 2000 Decennial Census information. In light of HUD's June 6, 2015 Advanced Notice of Proposed Rulemaking, HUD has chosen not to update the area selection criteria with 2010 tract delineations in order to ease the anticipated future implementation of a Small Area FMR based deconcentration rule.

unless not qualified to be reviewed. Areas are not qualified to be reviewed if they have been made a 50th-percentile area within the last three years or have lost 50th-percentile status for failure to deconcentrate within the last three years.

In FY 2015 there were 16 areas using 50th-percentile FMRs. Of these 16 areas, 6 areas completed three years of program participation and were evaluated. Only two of the 6 areas will continue as 50th-percentile FMR areas; three of the remaining four areas do not show measurable deconcentration over the three-year period, will not continue as 50th-percentile FMR areas, and will not be evaluated for three years. One area that was evaluated, the New Haven-Meriden, CT HUD Metro FMR Area, graduated from the program and will be evaluated each year. Housing authorities operating in these areas are encouraged to review the rules at 24 CFR 982.503(f) to determine if they qualify for continued use of the 50th percentile rents when setting their payment standards. The table below lists the three areas that are not eligible for 50th percentile FMRs until 2019.

FMR AREAS THAT FAILED TO DECONCENTRATE AND YEAR OF NEXT REEVALUATION

Baltimore, MD MSA	2019
Fort Lauderdale, FL HUD Metro FMR Area	2019
Richmond, VA HUD Metro FMR Area	2019

The Washington, DC–VA–MD HUD Metro FMR Area returns as a 50th percentile area after failing to deconcentrate in FY 2013. In summary, there will be 13 50th-percentile FMR areas in FY 2016. These areas are indicated by an asterisk in Schedule B, where all FMRs are listed by state. The following table lists the FMR areas along with the year of their next evaluation.

FY 2016 50TH-PERCENTILE FMR AREAS AND YEAR OF NEXT REEVALUATION

Albuquerque, NM MSA	2018
Chicago-Joliet-Naperville, IL HUD Metro FMR Area	2018
Denver-Aurora-Broomfield, CO MSA	2018
Hartford-West Hartford-East Hartford, CT HUD Metro FMR Area	2018
Honolulu, HI MSA	2018
Kansas City, MO–KS HUD Metro FMR Area	2018
Milwaukee-Waukesha-West Allis, WI MSA	2018
Philadelphia-Camden-Wilmington, PA–NJ–DE–MD MSA	2019
Riverside-San Bernardino-Ontario, CA MSA	2018
Tacoma, WA HUD Metro FMR Area	2018
Virginia Beach-Norfolk-Newport News, VA–NC MSA	2018
Washington, DC–VA–MD HUD Metro FMR Area	2019
West Palm Beach-Boca Raton, FL HUD Metro FMR Area	2019

III. FMR Methodology

This section provides a brief overview of how the FY 2016 FMRs are computed. For complete information on how FMR areas are determined, and on how each area's FMRs are derived, see the online documentation at *http://www.huduser.org/portal/datasets/fmr/fmrs/docsys.html&data=fmr16.*

The proposed FY 2016 FMRs are based on the updated metropolitan area definitions published by OMB on February 28, 2013. Counties that have been removed from metropolitan areas will be nonmetropolitan counties. Counties that have been added to metropolitan areas will be treated as metropolitan county subareas. They will receive rents based on their own data if the local data is statistically reliable (with an error that is less than one-half of the estimate) or receive the metropolitan rent if their subarea estimate does not exist or is statistically unreliable.[2] New multi-county metropolitan areas will be treated as individual county metropolitan subareas using county based gross rent estimates (if statistically reliable); otherwise, a metropolitan, area-wide gross rent estimate is used.

A. Base Year Rents

The U.S. Census Bureau released standard tabulations of 5-year ACS data collected between 2009 through 2013 in December of 2014. For Proposed FY 2016 FMRs, HUD uses the 2009–2013 5-year ACS data to update the base rents. HUD has updated base rents each year based on new 5-year data since FY 2012, for which HUD used 2005–2009 ACS data. HUD is also updating base rents for Puerto Rico FMRs using the 2009–2013 Puerto Rico Community Survey (PRCS); HUD first updated the Puerto Rico base rents in FY 2014 based on 2007–2011 PRCS data collected through the ACS program.

HUD historically based FMRs on gross rents for recent movers (those who have moved into their current residence in the last 24 months). However, due to the way Census constructs the 5-year ACS data, HUD developed a new methodology for calculating recent-mover FMRs in FY 2012. As in FY 2012, HUD assigns all areas a base rent, which is the two-bedroom standard quality 5-year gross rent estimate from the ACS.[3] Because HUD's regulations mandate that FMRs must be published as recent mover gross rents, HUD continues to apply a recent mover factor to the standard quality base rents assigned from the 5-year ACS data. The calculation of the recent mover factor is described below.

B. Recent Mover Factor

Following the assignment of the standard quality two-bedroom rent described above, HUD applies a recent mover factor to these rents. The calculation of the recent mover factor for FY 2016 is similar to the methodology HUD used in FY 2015, with the only difference being the use of updated ACS data and the change to the statistical reliability assessment of the ACS data. The following describes the process for determining the appropriate recent mover factor.

In general, HUD uses the 1-year ACS-based two-bedroom recent mover gross rent estimate from the smallest geographic area encompassing the FMR area for which the estimate is statistically reliable to calculate the recent mover factor.[4] HUD calculates some areas' recent mover factors using data collected just for the FMR area. However, HUD bases other areas' recent mover factors on larger geographic areas if this is necessary to obtain statistically reliable estimates. For metropolitan areas that are subareas of larger metropolitan areas, the order is FMR area, metropolitan area, aggregated metropolitan parts of the state, and state. Metropolitan areas that are not divided follow a similar path from FMR area, to aggregated metropolitan parts of the state, to state. In nonmetropolitan areas HUD bases the recent mover factor on the FMR area, the aggregated non-metropolitan parts of the state, or if that

[2] The metropolitan subarea of Columbia, MD no longer exists. This subarea, developed in the 1970s was based on data collected in the field before the exception payment standard regulations were developed. This level of geography cannot be continued as it does not comport with any current subarea rules.

[3] For areas with a two-bedroom standard quality gross rent from the ACS that have a margin of error greater than 50 percent of the estimate or no estimate due to inadequate sample in the 2009–2013 5-year ACS, HUD uses the two-bedroom state non-metro area rent.

[4] For the purpose of the recent mover factor calculation, statistically reliable is where the recent mover gross rent has a margin of error that is less than the estimate itself.

is not available, on the basis of the whole state. HUD calculates the recent mover factor as the percentage change between the 5-year 2009–2013 standard quality two-bedroom gross rent and the 1 year 2013 recent mover two-bedroom gross rent for the recent mover factor area. HUD does not allow recent mover factors to lower the standard quality base rent; therefore, if the 5-year standard quality rent is larger than the comparable 1-year recent mover rent, the recent mover factor is set to 1. The process for calculating each area's recent mover factor is detailed in the FY 2016 Proposed FMR documentation system available at: *http://www.huduser.org/portal/datasets/fmr/fmrs/docsys.html&data=fmr16*. Applying the recent mover factor to the standard quality base rent produces an ''as of'' 2013 recent mover two-bedroom base gross rent for the FMR area.

C. Other Rent Survey Data

A base rent has also been calculated for the insular areas using the 2010 decennial census of American Samoa, Guam, the Northern Mariana Islands, and the Virgin Islands. This is the first time American Samoa and the Northern Mariana Islands will have an FMR that is separate from Guam. In addition St. Johns, VI will receive a separate FMR; previously it was combined with St. Thomas. The 2010 rent data is updated to 2013 using the change in national ACS rents from 2010 to 2013.[5]

HUD does not use the ACS as the base rent or recent mover factor for eight areas where the FY 2016 FMR was adjusted based on survey data collected in 2012 for Hood River County, OR, Mountrail County, ND, Ward County, ND, and Williams County, ND and data collected from PHAs in 2014 for Bennington County, VT, Windham County, VT, Windsor County, VT, and Seattle, WA. HUD has not allocated funds to conduct surveys of FMR areas, and so future surveys must be paid for by the PHAs.

D. Updates From 2013 to 2014 and Forecast to April 2016

HUD updates the ACS-based ''as of'' 2013 rent through the end of 2014 using the annual change in CPI from 2013 to 2014. As in previous years, HUD uses local CPI data coupled with Consumer Expenditure Survey (CEX) data for FMR areas with at least 75 percent of their population within Class A metropolitan areas covered by local CPI data. HUD uses Census region CPI data for FMR areas in Class B and C size metropolitan areas and nonmetropolitan areas without local CPI update factors. Additionally, HUD is using CPI data collected locally in Puerto Rico as the basis for CPI adjustments from 2013 to 2014 for all Puerto Rico FMR areas. Following the application of the appropriate CPI update factor, HUD trends the estimate from 2014 to the middle of FY 2016. As in FY 2015, HUD continues to calculate the trend factor as the annualized change in median gross rents as measured across the most recent 5 years of available 1 year ACS data. The national median gross rent in 2008 was $824 and $905 in 2013. The overall change between 2008 and 2013 is 1.098 percent and the annualized change is 1.0189 percent. This annual trend factor is applied from the middle of 2014 (the mid-point of the annual 2014 CPI update) to the middle of FY 2016, or for a period of seven quarters. The trend factor for the seven quarter period is 1.0334 percent.

E. Puerto Rico Utility Adjustments

The gross rent data from the 2009 to 2013 Puerto Rico Community Survey (PRCS) coupled with the CPI data measured across Puerto Rico includes the utility rate increases from Commonwealth-owned utility companies that gave each FMR area in Puerto Rico an adjustment in both FY 2014 and FY 2015. The FY 2016 FMRs no longer include the utility adjustment; any changes in the Puerto Rico energy tariffs have been in effect long enough to be included in the Puerto Rico CPI.

G. Bedroom Rent Adjustments

HUD calculates the primary FMR estimates for two-bedroom units. This is generally the most common sized rental unit and, therefore, the most reliable to survey and analyze. Formerly, after each Decennial Census, HUD calculated rent relationships between two-bedroom units and other unit bedroom counts and used them to set FMRs for other units. HUD did this because it is much easier to update two-bedroom estimates and to use pre-established cost relationships with other unit bedroom counts than it is to develop independent FMR estimates for each unit bedroom count. When calculating FY 2013 FMRs, HUD updated the bedroom ratio adjustment factors using 2006–2010 5-year ACS data. The bedroom ratio methodology used in this update was the same methodology that was used when calculating bedroom ratios using 2000 Census data. The bedroom ratios HUD used in the calculation of FY 2016 FMRs have been updated using average data from three five-year data series (2007–2011, 2008–2012, and 2009–2013).

HUD establishes bedroom interval ranges based on an analysis of the range of such intervals for all areas with large enough samples to permit accurate bedroom ratio determinations. These ranges are: Efficiency FMRs are constrained to fall between 0.59 and 0.81 of the two-bedroom FMR; one-bedroom FMRs must be between 0.74 and 0.84 of the two-bedroom FMR; three-bedroom FMRs must be between 1.15 and 1.36 of the two-bedroom FMR; and four-bedroom FMRs must be between 1.24 and 1.64 of the two-bedroom FMR. (The maximums for the three-bedroom and four-bedroom FMRs are irrespective of the adjustments discussed in the next paragraph.) HUD adjusts bedroom rents for a given FMR area if the differentials between bedroom-size FMRs were inconsistent with normally observed patterns (*i.e.,* efficiency rents are not allowed to be higher than one-bedroom rents and four-bedroom rents are not allowed to be lower than three-bedroom rents). The bedroom ratios for Puerto Rico follow these constraints.

HUD further adjusts the rents for three-bedroom and larger units to reflect HUD's policy to set higher rents for these units. This adjustment is intended to increase the likelihood that the largest families, who have the most difficulty in leasing units, will be successful in finding eligible program units. The adjustment adds 8.7 percent to the unadjusted three-bedroom FMR estimates and adds 7.7 percent to the unadjusted four-bedroom FMR estimates. The FMRs for unit sizes larger than four bedrooms are calculated by adding 15 percent to the four-bedroom FMR for each extra bedroom. For example, the FMR for a five-bedroom unit is 1.15 times the four-bedroom FMR, and the FMR for a six-bedroom unit is 1.30 times the four-bedroom FMR. FMRs for single-room occupancy units are 0.75 times the zero-bedroom (efficiency) FMR.

For low-population, nonmetropolitan counties with small or statistically insignificant data for any two of the three 5-year ACS standard quality rents series used in the average, HUD uses state non-metropolitan data to determine bedroom ratios for each unit bedroom count. HUD made this adjustment to protect against unrealistically high or low FMRs due to insufficient sample sizes.

[5] The ACS is not conducted in the Pacific Islands (Guam, Northern Marianas and American Samoa) or the U.S. Virgin Islands. As part of the 2010 Decennial Census, the Census Bureau conducted ''long-form'' sample surveys for these areas. The results gathered by this long form survey have been incorporated into the FY 2016 FMRs.

IV. Manufactured Home Space Surveys

The FMR used to establish payment standard amounts for the rental of manufactured home spaces in the HCV program is 40 percent of the FMR for a two-bedroom unit. HUD will consider modification of the manufactured home space FMRs where public comments present statistically valid survey data showing the 40th-percentile manufactured home space rent (including the cost of utilities) for the entire FMR area.

All approved exceptions to these rents that were in effect in FY 2015 were updated to FY 2016 using the same data used to estimate the HCV program FMRs. If the result of this computation was higher than 40 percent of the new two-bedroom rent, the exception remains and is listed in Schedule D. The FMR area definitions used for the rental of manufactured home spaces are the same as the area definitions used for the other FMRs.

V. Small Area Fair Market Rents

Public housing authorities (PHA) in the Dallas, TX HUD Metro FMR Area (HMFA), along with the Housing Authority of the County of Cook (IL), the City of Long Beach (CA) Housing Authority, the Chattanooga, TN Housing Authority, the Town of Mamaroneck (NY) Housing Authority, and the Laredo, TX Housing Authority continue to be the only PHAs managing their voucher programs using Small Area Fair Market Rents (SAFMRs). These FMRs are listed in the Schedule B addendum.

SAFMRs are calculated using a rent ratio determined by dividing the median gross rent across all bedrooms for the small area (a ZIP code) by the similar median gross rent for the metropolitan area of the ZIP code. This rent ratio is multiplied by the current two- bedroom rent for the entire metropolitan area containing the small area to generate the current year two-bedroom rent for the small area. In small areas where the median gross rent is not statistically reliable, HUD substitutes the median gross rent for the county containing the ZIP code in the numerator of the rent ratio calculation. HUD has been criticized for continuing to use 2010 5-year ACS data as the basis for the Small Area FMR rent ratios, instead of updating these each year. HUD kept the rent ratios based on 2006–2010 5-year ACS data in order to provide stability in the Small Area FMRs and proposed only updating these ratios with the 2011–2015 ACS 5-year data, when all the underlying survey data would have been replaced. However, HUD's current experience with 5-year data for small areas reveals that this may create a greater disruption to Small Area FMRs than if HUD adjusted the ratios annually by applying a smoothing technique such as averaging of several years of 5-year ACS data. By implementing a rolling-average Small Area FMR rent ratio calculation, the Department believes more current data could be used without introducing excessive year-to-year variability in Small Area FMR rent ratios due to sampling variance. Therefore, for proposed FY 2016 SAFMRs, HUD has updated the rent ratios to use an average of the rent ratios calculated from the 2007–2011, 2008–2012, and 2009–2013 5-year ACS estimates.

VI. Request for Public Comments

HUD seeks public comments on the methodology used to calculate FY 2016 Proposed FMRs including Small Area FMRS, and the FMR levels for specific areas. Due to its current funding levels, HUD no longer has sufficient resources to conduct local surveys of rents to address comments filed regarding the FMR levels for specific areas. Commenters submitting comments on FMR levels must include sufficient information (including local data and a full description of the rental housing survey methodology used or a description of the methodology intended to be used to collect the necessary data) to justify any proposed changes. Questions on how to conduct FMR surveys may be addressed to Marie L. Lihn or Peter B. Kahn of the Economic and Market Analysis Division, Office of Economic Affairs, Office of Policy Development and Research at HUD headquarters [451 7th Street SW., Room 8208, Washington, DC 20410]; telephone number 202–402–2409, or they may be reached at *emad-hq@hud.gov.*

For small metropolitan areas without one-year ACS data and nonmetropolitan counties, HUD has developed a methodology using mail surveys that is discussed on the bottom of the FMR Web page: *http://www.huduser.org/portal/datasets/fmr.html.* This methodology allows for the collection of as few as 100 one-bedroom, two-bedroom and three-bedroom recent mover (tenants that moved in last 24 months) units.

While HUD has not developed a specific methodology for mail surveys in areas with 1-year ACS data, HUD would apply the standard established for Random-Digit Dialing (RDD) telephone rent surveys. The statistical difference of these survey results will be compared with the current FMR which means that the survey confidence interval must be outside the FMR. The survey should collect results based on 200 one-bedroom and two-bedroom eligible recent mover units to provide a small enough confidence interval for significant results in large market mail surveys. Areas with statistically reliable 1-year ACS data are not considered to be good candidates for local surveys due to the size and completeness of the ACS process.

Other survey methodologies are acceptable in providing data to support comments if the survey methodology can provide statistically reliable, unbiased estimates of the gross rent of the entire FMR area. In general, recommendations for FMR changes and supporting data must reflect the rent levels that exist within the entire FMR area and should be statistically reliable.

PHAs in nonmetropolitan areas may, in certain circumstances, conduct surveys of groups of counties. HUD must approve all county-grouped surveys in advance. PHAs are cautioned that the resulting FMRs may not be identical for the counties surveyed; each individual FMR area will have a separate FMR based on the relationship of rents in that area to the combined rents in the cluster of FMR areas. In addition, PHAs are advised that counties where FMRs are based on the combined rents in the cluster of FMR areas will not have their FMRs revised unless the grouped survey results show a revised FMR statistically different from the combined rent level.

Survey samples should preferably be randomly drawn from a complete list of rental units for the FMR area. If this is not feasible, the selected sample must be drawn to be statistically representative of the entire rental housing stock of the FMR area. Surveys must include units at all rent levels and be representative by structure type (including single-family, duplex, and other small rental properties), age of housing unit, and geographic location. The 2008–2012 5-year ACS data should be used as a means of verifying if a sample is representative of the FMR area's rental housing stock.

A PHA or contractor that cannot obtain the recommended number of sample responses after reasonable efforts should consult with HUD before abandoning its survey; in such situations, HUD may find it appropriate to relax normal sample size requirements.

The Department has developed guidance on how to provide data-supported comments on Small Area FMRs using HUD's special tabulations of the distribution of gross rents by bedroom unit size for ZIP Code

Tabulation Areas. This guidance is available at *http://www.huduser.org/portal/datasets/fmr.html* in the Proposed FY 2016 FMR section and should be used by interested parties in commenting on whether or not the level of Proposed Small Area FMRs are too high or too low (*i.e.* Proposed Small Area FMRs that are larger than the gross rent necessary to make 40 percent of the units accessible for an individual zip code or that are smaller than the gross rent necessary to make 40 percent of the units accessible for a given zip code).

HUD will consider increasing manufactured home space FMRs where public comment demonstrates that 40 percent of the two-bedroom FMR is not adequate. In order to be accepted as a basis for revising the manufactured home space FMRs, comments must include a pad rental survey of the mobile home parks in the area, identify the utilities included in each park's rental fee, and provide a copy of the applicable public housing authority's utility schedule.

As stated earlier in this notice, HUD is required to use the most recent data available when calculating FMRs. Therefore, in order to re-evaluate an area's FMR, HUD requires more current rental market data than the 2013 ACS. HUD encourages a PHA or other interested party that believes the FMR in their area is incorrect to file a comment even if they do not have the resources to provide market-wide rental data. In these instances, HUD will use the comments, should survey funding be restored, when determining the areas HUD will select for HUD-funded local area rent surveys.

VII. Environmental Impact

This Notice involves the establishment of fair market rent schedules, which do not constitute a development decision affecting the physical condition of specific project areas or building sites. Accordingly, under 24 CFR 50.19(c)(6), this Notice is categorically excluded from environmental review under the National Environmental Policy Act of 1969 (42 U.S.C. 4321).

Accordingly, the Fair Market Rent Schedules, which will not be codified in 24 CFR part 888, are proposed to be amended as shown in the Appendix to this notice:

Dated: August 31, 2015.

Katherine M. O'Regan,

Assistant Secretary for Policy Development and Research.

Fair Market Rents for the Housing Choice Voucher Program

Schedules B and D—General Explanatory Notes

1. Geographic Coverage

a. Metropolitan Areas—Most FMRs are market-wide rent estimates that are intended to provide housing opportunities throughout the geographic area in which rental-housing units are in direct competition. HUD is using the metropolitan Core-Based Statistical Areas (CBSAs), which are made up of one or more counties, as defined by the Office of Management and Budget (OMB), with some modifications. HUD is generally assigning separate FMRs to the component counties of CBSA Micropolitan Areas.

b. Modifications to OMB Definitions—Following OMB guidance, the estimation procedure for the FY 2016 proposed FMRs incorporates the OMB definitions of metropolitan areas based on the CBSA standards as implemented with 2000 Census data and updated by the 2010 Census in February 23, 2013. The adjustments made to the 2000 definitions to separate subparts of these areas where FMRs or median incomes would otherwise change significantly are continued. To follow HUDs policy of providing FMRs at the smallest possible area of geography, no counties were added to existing metropolitan areas. All counties added to metropolitan areas will still be treated as separate counties. New multicounty metropolitan areas are not subdivided. All metropolitan areas that have at least one subarea will also receive a subarea, that is the rents from a county that is a subarea will not be used for the remaining metropolitan subarea rent determination.

The specific counties and New England towns and cities within each state in MSAs and HMFAs were not changed by the February 28, 2013 OMB metropolitan area definitions. These areas are listed in Schedule B.

2. Unit Bedroom Count Adjustments

Schedule B shows the FMRs for zero-bedroom through four-bedroom units. The Schedule B addendum shows Small Area FMRs for all PHAs operating using Small Area FMRs (please see section V of this notice for a list of participating PHAs). The FMRs for unit sizes larger than four bedrooms are calculated by adding 15 percent to the four-bedroom FMR for each extra bedroom. For example, the FMR for a five-bedroom unit is 1.15 times the four-bedroom FMR, and the FMR for a six-bedroom unit is 1.30 times the four-bedroom FMR. FMRs for single-room-occupancy (SRO) units are 0.75 times the zero-bedroom FMR.

3. Arrangement of FMR Areas and Identification of Constituent Parts

a. The FMR areas in Schedule B are listed alphabetically by metropolitan FMR area and by nonmetropolitan county within each state. The exception FMRs for manufactured home spaces in Schedule D are listed alphabetically by state.

b. The constituent counties (and New England towns and cities) included in each metropolitan FMR area are listed immediately following the listings of the FMR dollar amounts. All constituent parts of a metropolitan FMR area that are in more than one state can be identified by consulting the listings for each applicable state.

c. Two nonmetropolitan counties are listed alphabetically on each line of the non-metropolitan county listings.

d. The New England towns and cities included in a nonmetropolitan county are listed immediately following the county name.

BILLING CODE 4210–67–P

SCHEDULE B - FY 2016 PROPOSED FAIR MARKET RENTS FOR EXISTING HOUSING PAGE 1

ALABAMA

METROPOLITAN FMR AREAS	0 BR	1 BR	2 BR	3 BR	4 BR	Counties of FMR AREA within STATE
Anniston-Oxford-Jacksonville, AL MSA	441	471	630	801	886	Calhoun
Auburn-Opelika, AL MSA	512	552	739	985	1233	Lee
Birmingham-Hoover, AL HMFA	605	717	830	1121	1235	Bibb, Blount, Jefferson, St. Clair, Shelby
Chilton County, AL HMFA	425	481	562	819	981	Chilton
Columbus, GA-AL MSA	587	650	768	1065	1341	Russell
Daphne-Fairhope-Foley, AL MSA	709	746	863	1258	1455	Baldwin
Decatur, AL MSA	432	513	624	852	931	Lawrence, Morgan
Dothan, AL HMFA	485	494	639	859	1006	Geneva, Houston
Florence-Muscle Shoals, AL MSA	472	475	612	794	964	Colbert, Lauderdale
Gadsden, AL MSA	397	487	629	781	905	Etowah
Henry County, AL HMFA	446	455	573	742	1000	Henry
Huntsville, AL MSA	518	590	718	981	1197	Limestone, Madison
Mobile, AL MSA	639	647	778	1020	1149	Mobile
Montgomery, AL MSA	558	639	778	1016	1319	Autauga, Elmore, Lowndes, Montgomery
Pickens County, AL HMFA	398	420	562	698	770	Pickens
Tuscaloosa, AL HMFA	546	633	770	983	1055	Hale, Tuscaloosa
Walker County, AL HMFA	468	482	618	827	955	Walker

NONMETROPOLITAN COUNTIES	0 BR	1 BR	2 BR	3 BR	4 BR	NONMETROPOLITAN COUNTIES	0 BR	1 BR	2 BR	3 BR	4 BR
Barbour	467	470	629	781	862	Bullock	446	449	562	819	973
Butler	417	420	562	790	820	Chambers	421	540	659	818	903
Cherokee	417	420	562	782	981	Choctaw	485	489	654	812	955
Clarke	462	486	562	791	910	Clay	434	454	562	796	820
Cleburne	465	468	626	777	858	Coffee	455	458	577	839	957
Conecuh	417	420	562	819	820	Coosa	438	441	572	770	784
Covington	417	420	562	749	981	Crenshaw	417	420	562	750	919
Cullman	436	476	597	750	818	Dale	369	444	573	823	1000
Dallas	404	447	562	738	969	DeKalb	442	451	588	730	806
Escambia	462	486	562	736	838	Fayette	455	484	562	797	820
Franklin	444	447	562	697	820	Greene	446	449	562	819	820
Jackson	457	463	565	701	878	Lamar	455	466	562	697	820
Macon	417	420	562	819	927	Marengo	417	420	562	765	820
Marion	417	420	562	707	770	Marshall	424	427	572	781	784
Monroe	442	445	562	819	981	Perry	462	486	562	753	820
Pike	474	498	577	828	842	Randolph	429	432	562	747	779
Sumter	549	554	678	841	929	Talladega	417	420	562	787	804
Tallapoosa	455	462	562	815	903	Washington	467	471	628	892	917
Wilcox	446	449	562	798	820	Winston	430	433	562	781	981

ALASKA

METROPOLITAN FMR AREAS	0 BR	1 BR	2 BR	3 BR	4 BR	Counties of FMR AREA within STATE
Anchorage, AK HMFA	871	1009	1277	1861	2230	Anchorage
Fairbanks, AK MSA	750	908	1216	1772	1971	Fairbanks North Star
Matanuska-Susitna Borough, AK HMFA	617	747	1000	1457	1746	Matanuska-Susitna

SCHEDULE B - FY 2016 PROPOSED FAIR MARKET RENTS FOR EXISTING HOUSING PAGE 2

ALASKA continued

NONMETROPOLITAN COUNTIES	0 BR	1 BR	2 BR	3 BR	4 BR	NONMETROPOLITAN COUNTIES	0 BR	1 BR	2 BR	3 BR	4 BR
Aleutians East	654	782	905	1135	1240	Aleutians West	916	1139	1485	1843	2290
Bethel	1008	1161	1353	1679	1855	Bristol Bay	853	882	1180	1495	1820
Denali	779	850	1077	1382	1661	Dillingham	780	915	1079	1339	1664
Haines	639	764	884	1135	1363	Hoonah-Angoon	479	614	777	1040	1065
Juneau	804	970	1298	1839	2002	Kenai Peninsula	778	783	984	1253	1653
Ketchikan Gateway	727	938	1179	1637	1949	Kodiak Island	734	818	947	1380	1540
Lake and Peninsula	605	722	836	1053	1289	Nome	839	1074	1360	1688	1864
North Slope	650	755	874	1117	1526	Northwest Arctic	947	996	1153	1431	1580
Petersburg	627	759	1016	1261	1393	Prince of Wales-Hyder	756	756	920	1142	1261
Sitka	813	888	1189	1637	1834	Skagway	893	943	1235	1585	1905
Southeast Fairbanks	837	1000	1157	1672	2020	Valdez-Cordova	835	840	1125	1396	1735
Wade Hampton	631	689	872	1082	1195	Wrangell	612	632	846	1233	1305
Yakutat	712	777	984	1234	1518	Yukon-Koyukuk	584	588	767	952	1183

ARIZONA

METROPOLITAN FMR AREAS	0 BR	1 BR	2 BR	3 BR	4 BR	Counties of FMR AREA within STATE
Flagstaff, AZ MSA	751	898	1121	1391	1666	Coconino
Lake Havasu City-Kingman, AZ MSA	499	585	745	1068	1169	Mohave
Phoenix-Mesa-Scottsdale, AZ MSA	589	726	903	1316	1540	Maricopa, Pinal
Prescott, AZ MSA	653	657	829	1208	1266	Yavapai
Sierra Vista-Douglas, AZ MSA	618	639	793	1104	1384	Cochise
Tucson, AZ MSA	525	637	852	1242	1463	Pima
Yuma, AZ MSA	603	607	813	1185	1409	Yuma

NONMETROPOLITAN COUNTIES	0 BR	1 BR	2 BR	3 BR	4 BR	NONMETROPOLITAN COUNTIES	0 BR	1 BR	2 BR	3 BR	4 BR
Apache	545	692	855	1196	1463	Gila	629	633	814	1112	1116
Graham	461	642	748	1078	1082	Greenlee	501	572	666	826	1021
La Paz	521	524	702	871	1226	Navajo	602	606	754	1018	1167
Santa Cruz	513	516	691	941	1097						

ARKANSAS

METROPOLITAN FMR AREAS	0 BR	1 BR	2 BR	3 BR	4 BR	Counties of FMR AREA within STATE
Fayetteville-Springdale-Rogers, AR HMFA	512	542	701	1018	1224	Benton, Madison, Washington
Fort Smith, AR-OK HMFA	484	486	651	869	1047	Crawford, Sebastian
Grant County, AR HMFA	448	527	610	889	1065	Grant
Hot Springs, AR MSA	451	546	731	924	1109	Garland
Jonesboro, AR HMFA	394	520	639	873	876	Craighead
Little River County, AR HMFA	453	456	610	757	1065	Little River
Little Rock-North Little Rock-Conway, AR HMFA	520	625	759	1032	1208	Faulkner, Lonoke, Perry, Pulaski, Saline
Memphis, TN-MS-AR HMFA	595	692	817	1114	1293	Crittenden
Pine Bluff, AR MSA	397	491	644	799	974	Cleveland, Jefferson, Lincoln
Poinsett County, AR HMFA	496	499	610	839	1007	Poinsett
Texarkana, TX-Texarkana, AR HMFA	441	556	703	882	964	Miller

SCHEDULE B - FY 2016 PROPOSED FAIR MARKET RENTS FOR EXISTING HOUSING PAGE 3

ARKANSAS continued

NONMETROPOLITAN COUNTIES	0 BR	1 BR	2 BR	3 BR	4 BR	NONMETROPOLITAN COUNTIES	0 BR	1 BR	2 BR	3 BR	4 BR
Arkansas	483	518	614	794	869	Ashley	479	511	610	826	836
Baxter	471	474	635	873	1041	Boone	454	457	612	873	1068
Bradley	444	479	641	797	879	Calhoun	483	485	615	774	893
Carroll	504	505	613	801	840	Chicot	479	492	610	889	1065
Clark	453	456	610	842	936	Clay	453	456	610	889	966
Cleburne	453	456	610	889	922	Columbia	479	509	610	889	946
Conway	465	530	710	881	1160	Cross	484	487	652	843	956
Dallas	479	480	610	881	886	Desha	454	457	610	845	886
Drew	453	456	610	820	840	Franklin	460	463	620	769	900
Fulton	453	456	610	811	886	Greene	396	524	642	827	1054
Hempstead	482	496	613	829	852	Hot Spring	482	530	613	800	916
Howard	381	456	610	788	968	Independence	456	459	615	773	929
Izard	376	493	610	806	924	Jackson	376	456	610	801	960
Johnson	453	456	610	760	836	Lafayette	453	456	610	781	880
Lawrence	455	458	610	817	854	Lee	453	456	610	757	850
Logan	423	456	610	860	981	Marion	453	456	610	790	968
Mississippi	431	472	632	819	866	Monroe	453	456	610	793	1065
Montgomery	453	456	610	757	886	Nevada	453	456	610	799	868
Newton	453	456	610	765	886	Ouachita	501	527	610	817	1008
Phillips	453	456	610	889	1065	Pike	501	527	610	757	836
Polk	453	456	610	801	887	Pope	480	483	637	900	1112
Prairie	470	473	610	889	1065	Randolph	453	456	610	757	886
St. Francis	479	516	610	889	1065	Scott	453	456	610	764	886
Searcy	479	504	610	800	886	Sevier	453	456	610	757	836
Sharp	376	456	610	850	886	Stone	453	456	610	762	886
Union	478	482	637	790	902	Van Buren	453	456	610	873	876
White	490	493	660	954	1108	Woodruff	427	456	610	757	906
Yell	453	456	610	889	994						

CALIFORNIA

METROPOLITAN FMR AREAS	0 BR	1 BR	2 BR	3 BR	4 BR	Counties of FMR AREA within STATE
Santa Ana-Anaheim-Irvine, CA HMFA	1147	1308	1653	2301	2504	Orange
Bakersfield, CA MSA	594	631	816	1180	1424	Kern
Chico, CA MSA	615	705	897	1303	1566	Butte
El Centro, CA MSA	511	635	826	1159	1442	Imperial
Fresno, CA MSA	654	682	852	1201	1413	Fresno
Hanford-Corcoran, CA MSA	600	604	808	1119	1277	Kings
Los Angeles-Long Beach-Glendale, CA HMFA	936	1140	1473	1986	2202	Los Angeles
Madera, CA MSA	690	695	930	1350	1527	Madera
Merced, CA MSA	511	593	774	1120	1351	Merced
Modesto, CA MSA	627	709	925	1321	1596	Stanislaus
Napa, CA MSA	914	1132	1482	2160	2339	Napa
Oakland-Fremont, CA HMFA	1025	1235	1562	2177	2427	Alameda, Contra Costa

SCHEDULE B - FY 2016 PROPOSED FAIR MARKET RENTS FOR EXISTING HOUSING PAGE 4

CALIFORNIA continued

METROPOLITAN FMR AREAS	0 BR	1 BR	2 BR	3 BR	4 BR	Counties of FMR AREA within STATE
Oxnard-Thousand Oaks-Ventura, CA MSA	982	1183	1583	2237	2460	Ventura
Redding, CA MSA	652	655	860	1253	1465	Shasta
*Riverside-San Bernardino-Ontario, CA MSA	788	934	1173	1653	2032	Riverside, San Bernardino
Sacramento--Roseville--Arden-Arcade, CA HMFA	699	806	1014	1478	1770	El Dorado, Placer, Sacramento
Salinas, CA MSA	949	1101	1382	2014	2154	Monterey
San Benito County, CA HMFA	915	1014	1338	1950	2336	San Benito
San Diego-Carlsbad, CA MSA	1028	1139	1481	2141	2301	San Diego
San Francisco, CA HMFA	1395	1793	2262	2952	3515	Marin, San Francisco, San Mateo
San Jose-Sunnyvale-Santa Clara, CA HMFA	1333	1564	1971	2745	3062	Santa Clara
San Luis Obispo-Paso Robles-Arroyo Grande, CA MSA	853	996	1294	1886	2222	San Luis Obispo
Santa Cruz-Watsonville, CA MSA	978	1184	1585	2099	2348	Santa Cruz
Santa Maria-Santa Barbara, CA MSA	1053	1212	1434	1972	2284	Santa Barbara
Santa Rosa, CA MSA	923	1078	1398	2037	2441	Sonoma
Stockton-Lodi, CA MSA	609	727	956	1393	1669	San Joaquin
Vallejo-Fairfield, CA MSA	820	1012	1269	1849	2216	Solano
Visalia-Porterville, CA MSA	573	577	749	1092	1229	Tulare
Yolo, CA HMFA	853	859	1150	1652	2008	Yolo
Yuba City, CA MSA	620	653	851	1240	1486	Sutter, Yuba

NONMETROPOLITAN COUNTIES	0 BR	1 BR	2 BR	3 BR	4 BR	NONMETROPOLITAN COUNTIES	0 BR	1 BR	2 BR	3 BR	4 BR
Alpine	608	655	872	1246	1415	Amador	641	777	1040	1485	1708
Calaveras	637	705	914	1332	1596	Colusa	518	693	840	1224	1342
Del Norte	718	722	911	1328	1591	Glenn	603	607	813	1130	1320
Humboldt	661	740	988	1428	1694	Inyo	725	730	927	1333	1504
Lake	676	717	960	1385	1426	Lassen	613	715	957	1362	1671
Mariposa	650	696	932	1168	1577	Mendocino	725	780	1044	1488	1591
Modoc	454	562	651	949	1120	Mono	862	1077	1247	1547	2024
Nevada	783	898	1202	1752	2099	Plumas	600	703	860	1096	1336
Sierra	826	890	1185	1495	1923	Siskiyou	517	658	839	1221	1383
Tehama	511	619	828	1142	1146	Trinity	621	625	837	1134	1461
Tuolumne	724	738	988	1348	1498						

COLORADO

METROPOLITAN FMR AREAS	0 BR	1 BR	2 BR	3 BR	4 BR	Counties of FMR AREA within STATE
Boulder, CO MSA	978	1129	1365	1981	2355	Boulder
Colorado Springs, CO HMFA	543	683	881	1284	1538	El Paso
*Denver-Aurora-Lakewood, CO MSA	766	954	1213	1768	2059	Adams, Arapahoe, Broomfield, Clear Creek, Denver, Douglas, Elbert, Gilpin, Jefferson, Park
Fort Collins, CO MSA	676	790	963	1403	1681	Larimer
Grand Junction, CO MSA	505	594	787	1147	1374	Mesa
Greeley, CO MSA	510	624	802	1169	1400	Weld
Pueblo, CO MSA	581	585	772	1102	1247	Pueblo
Teller County, CO HMFA	632	712	909	1296	1587	Teller

SCHEDULE B - FY 2016 PROPOSED FAIR MARKET RENTS FOR EXISTING HOUSING PAGE 5

COLORADO continued

NONMETROPOLITAN COUNTIES	0 BR	1 BR	2 BR	3 BR	4 BR
Alamosa	528	531	651	949	1008
Baca	535	562	651	949	1008
Chaffee	618	622	833	1214	1401
Conejos	535	562	651	901	951
Crowley	483	486	651	808	1100
Delta	605	609	815	1092	1355
Eagle	736	923	1194	1513	2085
Garfield	783	794	1063	1411	1855
Gunnison	514	623	834	1069	1350
Huerfano	508	511	669	937	1036
Kiowa	527	531	695	862	953
Lake	670	675	903	1121	1398
Las Animas	517	563	751	1065	1155
Logan	530	533	698	917	1035
Moffat	585	589	756	1051	1073
Montrose	603	607	812	1169	1322
Otero	536	540	723	897	991
Phillips	493	496	664	824	910
Prowers	496	499	651	825	955
Rio Grande	535	562	651	859	1106
Saguache	490	493	660	851	1152
San Miguel	841	1019	1364	1693	2050
Summit	805	979	1305	1653	2021
Yuma	483	486	651	924	1055

NONMETROPOLITAN COUNTIES	0 BR	1 BR	2 BR	3 BR	4 BR
Archuleta	614	618	809	1107	1177
Bent	498	501	671	839	920
Cheyenne	483	486	651	808	984
Costilla	562	566	741	1038	1148
Custer	495	498	652	950	1138
Dolores	535	562	651	912	1008
Fremont	554	564	715	1016	1180
Grand	578	700	937	1262	1476
Hinsdale	549	553	724	1014	1121
Jackson	605	609	798	990	1236
Kit Carson	535	562	651	808	1075
La Plata	731	790	985	1436	1658
Lincoln	550	558	670	831	1038
Mineral	494	497	651	814	1008
Montezuma	535	562	651	949	1137
Morgan	525	528	689	956	1026
Ouray	643	796	1042	1519	1614
Pitkin	1013	1227	1642	2038	2251
Rio Blanco	528	532	712	1038	1063
Routt	904	932	1101	1528	1537
San Juan	656	795	1064	1490	1648
Sedgwick	483	486	651	870	892
Washington	516	519	651	839	916

CONNECTICUT

METROPOLITAN FMR AREAS	0 BR	1 BR	2 BR	3 BR	4 BR	Components of FMR AREA within STATE
Bridgeport, CT HMFA	760	941	1193	1527	1737	Fairfield County towns of Bridgeport town, Easton town, Fairfield town, Monroe town, Shelton town, Stratford town, Trumbull town
Colchester-Lebanon, CT HMFA	839	885	1185	1470	1706	New London County towns of Colchester town, Lebanon town
Danbury, CT HMFA	1107	1376	1754	2197	2850	Fairfield County towns of Bethel town, Brookfield town, Danbury town, New Fairfield town, Newtown town, Redding town, Ridgefield town, Sherman town
*Hartford-West Hartford-East Hartford, CT HMFA	749	956	1196	1484	1701	Hartford County towns of Avon town, Berlin town, Bloomfield town, Bristol town, Burlington town, Canton town, East Granby town, East Hartford town, East Windsor town, Enfield town, Farmington town, Glastonbury town, Granby town, Hartford town, Hartland town, Manchester town, Marlborough town, New Britain town, Newington town, Plainville town, Rocky Hill town, Simsbury town, Southington town, South Windsor town, Suffield town, West Hartford town, Wethersfield town, Windsor town, Windsor Locks town

SCHEDULE B - FY 2016 PROPOSED FAIR MARKET RENTS FOR EXISTING HOUSING PAGE 6

CONNECTICUT continued

METROPOLITAN FMR AREAS	0 BR	1 BR	2 BR	3 BR	4 BR	Components of FMR AREA within STATE
						Middlesex County towns of Chester town, Cromwell town, Durham town, East Haddam town, East Hampton town, Haddam town, Middlefield town, Middletown town, Portland town Tolland County towns of Andover town, Bolton town, Columbia town, Coventry town, Ellington town, Hebron town, Mansfield town, Somers town, Stafford town, Tolland town, Union town, Vernon town, Willington town
Milford-Ansonia-Seymour, CT HMFA	990	1010	1259	1567	1838	New Haven County towns of Ansonia town, Beacon Falls town, Derby town, Milford town, Oxford town, Seymour town
New Haven-Meriden, CT HMFA	852	1020	1245	1599	1844	New Haven County towns of Bethany town, Branford town, Cheshire town, East Haven town, Guilford town, Hamden town, Madison town, Meriden town, New Haven town, North Branford town, North Haven town, Orange town, Wallingford town, West Haven town, Woodbridge town
Norwich-New London, CT HMFA	723	851	1106	1457	1690	New London County towns of Bozrah town, East Lyme town, Franklin town, Griswold town, Groton town, Ledyard town, Lisbon town, Lyme town, Montville town, New London town, North Stonington town, Norwich town, Old Lyme town, Preston town, Salem town, Sprague town, Stonington town, Voluntown town, Waterford town
Southern Middlesex County, CT HMFA	852	977	1308	1786	1793	Middlesex County towns of Clinton town, Deep River town, Essex town, Killingworth town, Old Saybrook town, Westbrook town
Stamford-Norwalk, CT HMFA	1209	1499	1909	2399	2805	Fairfield County towns of Darien town, Greenwich town, New Canaan town, Norwalk town, Stamford town, Weston town, Westport town, Wilton town
Waterbury, CT HMFA	604	781	979	1219	1387	New Haven County towns of Middlebury town, Naugatuck town, Prospect town, Southbury town, Waterbury town, Wolcott town
NONMETROPOLITAN COUNTIES	**0 BR**	**1 BR**	**2 BR**	**3 BR**	**4 BR**	**Towns within nonmetropolitan counties**
Litchfield County, CT	679	871	1101	1425	1573	Barkhamsted town, Bethlehem town, Bridgewater town, Canaan town, Colebrook town, Cornwall town, Goshen town, Harwinton town, Kent town, Litchfield town, Morris town, New Hartford town, New Milford town, Norfolk town, North Canaan town, Plymouth town, Roxbury town, Salisbury town, Sharon town, Thomaston town, Torrington town, Warren town, Washington town, Watertown town, Winchester town, Woodbury town
Windham County, CT	601	705	924	1147	1267	Ashford town, Brooklyn town, Canterbury town, Chaplin town, Eastford town, Hampton town, Killingly town, Plainfield town, Pomfret town, Putnam town, Scotland town, Sterling town, Thompson town, Windham town, Woodstock town

DELAWARE

METROPOLITAN FMR AREAS	0 BR	1 BR	2 BR	3 BR	4 BR	Counties of FMR AREA within STATE
Dover, DE MSA	675	813	941	1369	1643	Kent

SCHEDULE B - FY 2016 PROPOSED FAIR MARKET RENTS FOR EXISTING HOUSING PAGE 7

DELAWARE continued

METROPOLITAN FMR AREAS	0 BR	1 BR	2 BR	3 BR	4 BR	Counties of FMR AREA within STATE
*Philadelphia-Camden-Wilmington, PA-NJ-DE-MD MSA..	820	992	1196	1484	1639	New Castle
Sussex County, DE HMFA.....	694	747	1000	1371	1545	Sussex

DISTRICT OF COLUMBIA

METROPOLITAN FMR AREAS	0 BR	1 BR	2 BR	3 BR	4 BR	Counties of FMR AREA within STATE
*Washington-Arlington-Alexandria, DC-VA-MD HMFA...	1292	1386	1604	2119	2694	District of Columbia

FLORIDA

METROPOLITAN FMR AREAS	0 BR	1 BR	2 BR	3 BR	4 BR	Counties of FMR AREA within STATE
Baker County, FL HMFA.....	447	619	716	946	1186	Baker
Cape Coral-Fort Myers, FL MSA.....	673	721	900	1181	1240	Lee
Crestview-Fort Walton Beach-Destin, FL HMFA.....	650	759	919	1332	1602	Okaloosa
Deltona-Daytona Beach-Ormond Beach, FL HMFA.....	546	711	885	1198	1346	Volusia
Fort Lauderdale, FL HMFA.....	764	968	1238	1769	2161	Broward
Gainesville, FL MSA.....	630	711	877	1182	1376	Alachua, Gilchrist
Gulf County, FL HMFA.....	537	630	729	989	1223	Gulf
Homosassa Springs, FL MSA.....	601	605	767	999	1269	Citrus
Jacksonville, FL HMFA.....	608	778	948	1254	1558	Clay, Duval, Nassau, St. Johns
Lakeland-Winter Haven, FL MSA.....	677	681	891	1187	1504	Polk
Miami-Miami Beach-Kendall, FL HMFA.....	765	963	1235	1651	1963	Miami-Dade
Naples-Immokalee-Marco Island, FL MSA.....	712	841	1030	1375	1706	Collier
North Port-Sarasota-Bradenton, FL MSA.....	702	742	962	1316	1636	Manatee, Sarasota
Ocala, FL MSA.....	540	626	771	1035	1077	Marion
Orlando-Kissimmee-Sanford, FL MSA.....	739	825	991	1316	1588	Lake, Orange, Osceola, Seminole
Palm Bay-Melbourne-Titusville, FL MSA.....	532	680	862	1195	1485	Brevard
Palm Coast, FL HMFA.....	565	747	916	1187	1337	Flagler
Panama City-Lynn Haven-Panama City Beach, FL HMFA.	649	746	870	1233	1465	Bay
Pensacola-Ferry Pass-Brent, FL MSA.....	681	699	829	1136	1447	Escambia, Santa Rosa
Port St. Lucie, FL MSA.....	689	739	912	1263	1542	Martin, St. Lucie
Punta Gorda, FL MSA.....	599	626	838	1155	1288	Charlotte
Sebastian-Vero Beach, FL MSA.....	586	684	823	1168	1265	Indian River
Sebring, FL MSA.....	518	550	728	994	998	Highlands
Tallahassee, FL HMFA.....	685	724	903	1179	1423	Gadsden, Jefferson, Leon
Tampa-St. Petersburg-Clearwater, FL MSA.....	660	785	980	1303	1556	Hernando, Hillsborough, Pasco, Pinellas
The Villages, FL MSA.....	514	593	720	1049	1111	Sumter
Wakulla County, FL HMFA.....	610	628	789	1098	1186	Wakulla
Walton County, FL HMFA.....	626	658	762	1081	1330	Walton
*West Palm Beach-Boca Raton, FL HMFA.....	756	979	1225	1670	2019	Palm Beach

NONMETROPOLITAN COUNTIES	0 BR	1 BR	2 BR	3 BR	4 BR	NONMETROPOLITAN COUNTIES	0 BR	1 BR	2 BR	3 BR	4 BR
Bradford.....	510	542	627	914	918	Calhoun.....	465	468	627	838	868
Columbia.....	674	747	864	1234	1402	DeSoto.....	538	542	671	916	920
Dixie.....	521	546	640	808	877	Franklin.....	581	617	714	1027	1247
Glades.....	557	561	751	932	1029	Hamilton.....	510	542	627	856	859
Hardee.....	526	559	647	894	980	Hendry.....	612	639	752	983	1261

SCHEDULE B - FY 2016 PROPOSED FAIR MARKET RENTS FOR EXISTING HOUSING PAGE 8

FLORIDA continued

NONMETROPOLITAN COUNTIES	0 BR	1 BR	2 BR	3 BR	4 BR	NONMETROPOLITAN COUNTIES	0 BR	1 BR	2 BR	3 BR	4 BR
Holmes	510	542	627	831	868	Jackson	510	521	627	852	995
Lafayette	510	542	627	778	1095	Levy	515	537	627	870	1095
Liberty	510	542	627	865	868	Madison	510	542	627	778	859
Monroe	987	1088	1456	1807	2015	Okeechobee	514	518	693	864	1059
Putnam	487	490	627	799	868	Suwannee	465	468	627	867	1001
Taylor	510	542	627	865	868	Union	510	542	627	827	868
Washington	465	468	627	827	868						

GEORGIA

METROPOLITAN FMR AREAS	0 BR	1 BR	2 BR	3 BR	4 BR	Counties of FMR AREA within STATE
Albany, GA MSA	538	572	705	954	976	Baker, Dougherty, Lee, Terrell, Worth
Athens-Clarke County, GA MSA	576	638	751	1021	1272	Clarke, Madison, Oconee, Oglethorpe
Atlanta-Sandy Springs-Roswell, GA HMFA	755	810	938	1239	1514	Barrow, Bartow, Carroll, Cherokee, Clayton, Cobb, Coweta, Dawson, DeKalb, Douglas, Fayette, Forsyth, Fulton, Gwinnett, Heard, Henry, Jasper, Newton, Paulding, Pickens, Pike, Rockdale, Spalding, Walton
Augusta-Richmond County, GA-SC HMFA	527	605	726	985	1253	Burke, Columbia, McDuffie, Richmond
Brunswick, GA MSA	581	585	783	1071	1160	Brantley, Glynn, McIntosh
Butts County, GA HMFA	584	588	787	977	1079	Butts
Chattanooga, TN-GA MSA	509	608	758	1007	1233	Catoosa, Dade, Walker
Columbus, GA-AL MSA	587	650	768	1065	1341	Chattahoochee, Harris, Marion, Muscogee
Dalton, GA HMFA	539	542	669	878	917	Whitfield
Gainesville, GA MSA	632	668	819	1037	1158	Hall
Haralson County, GA HMFA	546	550	736	1004	1198	Haralson
Hinesville, GA HMFA	668	715	833	1164	1454	Liberty
Lamar County, GA HMFA	503	507	637	928	1027	Lamar
Lincoln County, GA HMFA	476	550	637	863	1112	Lincoln
Long County, GA HMFA	473	476	637	928	1112	Long
Macon, GA HMFA	440	602	697	927	1129	Bibb, Crawford, Jones, Twiggs
Meriwether County, GA HMFA	527	548	641	919	922	Meriwether
Monroe County, GA HMFA	449	570	660	962	1067	Monroe
Morgan County, GA HMFA	541	569	659	960	1111	Morgan
Murray County, GA HMFA	482	485	637	813	994	Murray
Peach County, GA HMFA	402	519	651	889	892	Peach
Pulaski County, GA HMFA	473	476	637	904	998	Pulaski
Rome, GA MSA	488	495	662	869	1106	Floyd
Savannah, GA MSA	649	766	886	1193	1395	Bryan, Chatham, Effingham
Valdosta, GA MSA	538	541	692	928	1163	Brooks, Echols, Lanier, Lowndes
Warner Robins, GA HMFA	638	652	796	1013	1210	Houston

NONMETROPOLITAN COUNTIES	0 BR	1 BR	2 BR	3 BR	4 BR	NONMETROPOLITAN COUNTIES	0 BR	1 BR	2 BR	3 BR	4 BR
Appling	494	497	637	790	994	Atkinson	473	476	637	837	1024
Bacon	494	497	637	790	937	Baldwin	455	554	695	907	1163
Banks	495	498	650	897	1039	Ben Hill	475	478	640	826	1028
Berrien	473	476	637	790	1112	Bleckley	523	530	637	928	1024
Bulloch	498	503	648	944	1131	Calhoun	473	476	637	869	1024

SCHEDULE B - FY 2016 PROPOSED FAIR MARKET RENTS FOR EXISTING HOUSING PAGE 9

GEORGIA continued

NONMETROPOLITAN COUNTIES	0 BR	1 BR	2 BR	3 BR	4 BR
Camden	597	601	804	1116	1403
Charlton	473	476	637	926	1024
Clay	514	518	664	870	1067
Coffee	473	476	637	915	1073
Cook	523	550	637	928	1077
Decatur	513	516	643	827	881
Dooly	486	489	637	907	1024
Elbert	473	476	637	836	926
Evans	513	516	637	847	873
Franklin	482	485	649	842	1004
Glascock	473	476	637	894	1112
Grady	523	550	637	837	1056
Habersham	533	555	649	946	1043
Hart	473	476	637	830	873
Jackson	599	603	768	953	1178
Jefferson	473	476	637	790	1016
Johnson	475	478	637	857	873
Lumpkin	537	541	714	1025	1247
Miller	494	497	637	817	1024
Montgomery	523	550	637	790	1024
Polk	408	494	661	902	1000
Quitman	494	497	637	839	1024
Randolph	502	506	677	987	1088
Screven	473	476	637	849	873
Stephens	473	476	637	917	1112
Sumter	517	557	645	828	884
Taliaferro	627	631	809	1004	1300
Taylor	494	497	637	915	1024
Thomas	537	541	710	970	973
Toombs	473	476	637	863	1112
Treutlen	514	517	637	806	873
Turner	494	497	637	818	1112
Upson	523	550	637	928	1003
Warren	490	493	637	928	1112
Wayne	473	476	637	817	1112
Wheeler	393	497	637	928	1024
Wilcox	523	550	637	790	1024
Wilkinson	473	476	637	920	1091

NONMETROPOLITAN COUNTIES	0 BR	1 BR	2 BR	3 BR	4 BR
Candler	473	476	637	851	1112
Chattooga	473	476	637	846	1112
Clinch	473	476	637	811	1028
Colquitt	481	484	637	881	1035
Crisp	497	500	637	792	1021
Dodge	473	476	637	880	1082
Early	498	544	637	928	1024
Emanuel	473	476	637	817	889
Fannin	518	522	669	830	1075
Gilmer	515	518	694	861	1212
Gordon	452	546	686	968	1164
Greene	485	488	653	867	1049
Hancock	494	497	637	870	873
Irwin	494	497	637	811	1024
Jeff Davis	494	497	637	805	900
Jenkins	494	497	637	812	1024
Laurens	512	515	637	865	1017
Macon	480	483	637	790	873
Mitchell	505	509	681	845	933
Pierce	523	550	637	863	1112
Putnam	546	550	705	875	966
Rabun	462	598	740	938	1014
Schley	486	489	637	928	1112
Seminole	494	497	637	839	1024
Stewart	494	497	637	928	1024
Talbot	620	624	835	1036	1342
Tattnall	523	550	637	923	926
Telfair	393	476	637	790	1024
Tift	514	518	667	849	983
Towns	548	553	667	836	1165
Troup	566	570	724	1029	1079
Union	493	496	664	872	1005
Ware	416	476	637	862	873
Washington	523	550	637	877	1112
Webster	507	511	655	813	1053
White	575	579	731	1029	1175
Wilkes	480	484	637	928	1024

HAWAII

METROPOLITAN FMR AREAS	0 BR	1 BR	2 BR	3 BR	4 BR	Counties of FMR AREA within STATE
*Honolulu, HI MSA	1318	1489	1961	2858	3102	Honolulu

SCHEDULE B - FY 2016 PROPOSED FAIR MARKET RENTS FOR EXISTING HOUSING PAGE 10

HAWAII continued

METROPOLITAN FMR AREAS	0 BR	1 BR	2 BR	3 BR	4 BR	Counties of FMR AREA within STATE
Kalawao County, HI HMFA	459	512	651	949	1137	Kalawao
Maui County, HI HMFA	902	1004	1271	1852	2034	Maui

NONMETROPOLITAN COUNTIES	0 BR	1 BR	2 BR	3 BR	4 BR	NONMETROPOLITAN COUNTIES	0 BR	1 BR	2 BR	3 BR	4 BR
Hawaii	799	955	1180	1557	1990	Kauai	767	995	1223	1601	1887

IDAHO

METROPOLITAN FMR AREAS	0 BR	1 BR	2 BR	3 BR	4 BR	Counties of FMR AREA within STATE
Boise City, ID HMFA	481	610	780	1129	1337	Ada, Boise, Canyon, Owyhee
Butte County, ID HMFA	438	497	651	856	1051	Butte
Coeur d'Alene, ID MSA	498	575	759	1059	1325	Kootenai
Gem County, ID HMFA	427	518	693	979	1080	Gem
Idaho Falls, ID HMFA	430	503	673	905	1118	Bonneville, Jefferson
Lewiston, ID-WA MSA	453	538	720	923	1171	Nez Perce
Logan, UT-ID MSA	474	520	651	949	1084	Franklin
Pocatello, ID MSA	402	486	651	911	1137	Bannock

NONMETROPOLITAN COUNTIES	0 BR	1 BR	2 BR	3 BR	4 BR	NONMETROPOLITAN COUNTIES	0 BR	1 BR	2 BR	3 BR	4 BR
Adams	483	486	651	877	1137	Bear Lake	483	486	651	866	907
Benewah	483	486	651	896	1137	Bingham	483	486	651	861	1084
Blaine	655	713	952	1181	1611	Bonner	557	579	719	970	1236
Boundary	505	539	651	930	1137	Camas	490	493	651	949	1137
Caribou	490	493	651	808	1137	Cassia	505	506	651	949	1105
Clark	490	493	651	891	1137	Clearwater	505	555	651	808	1137
Custer	505	562	651	891	1137	Elmore	483	486	651	903	1137
Fremont	495	498	667	828	982	Gooding	483	486	651	916	1137
Idaho	483	486	651	892	1137	Jerome	483	486	651	915	984
Latah	502	505	674	982	1177	Lemhi	505	562	651	949	1137
Lewis	505	508	651	949	1062	Lincoln	483	486	651	838	1137
Madison	539	544	656	956	1145	Minidoka	505	526	651	932	1137
Oneida	505	562	651	878	1134	Payette	501	504	675	887	1119
Power	483	486	651	905	956	Shoshone	505	526	651	813	1055
Teton	576	580	766	999	1337	Twin Falls	585	592	755	1019	1318
Valley	540	584	697	1016	1217	Washington	483	486	651	918	1137

ILLINOIS

METROPOLITAN FMR AREAS	0 BR	1 BR	2 BR	3 BR	4 BR	Counties of FMR AREA within STATE
Bloomington, IL..HMFA	551	619	820	1082	1432	McLean
Bond County, IL HMFA	432	511	684	849	1018	Bond
Cape Girardeau, MO-IL MSA	465	488	651	890	972	Alexander
Champaign-Urbana, IL MSA	528	653	815	1026	1352	Champaign, Ford, Piatt

SCHEDULE B - FY 2016 PROPOSED FAIR MARKET RENTS FOR EXISTING HOUSING PAGE 11

ILLINOIS continued

METROPOLITAN FMR AREAS	0 BR	1 BR	2 BR	3 BR	4 BR	Counties of FMR AREA within STATE
*Chicago-Joliet-Naperville, IL HMFA	850	989	1162	1476	1758	Cook, DuPage, Kane, Lake, McHenry, Will
Danville, IL MSA	409	506	663	823	909	Vermilion
Davenport-Moline-Rock Island, IA-IL MSA	444	550	704	925	982	Henry, Mercer, Rock Island
De Witt County, IL HMFA	436	468	627	820	919	De Witt
DeKalb County, IL HMFA	592	660	880	1215	1472	DeKalb
Decatur, IL MSA	423	512	686	933	952	Macon
Grundy County, IL HMFA	731	732	980	1400	1405	Grundy
Jackson County, IL HMFA	450	563	729	996	999	Jackson
Kankakee, IL MSA	501	607	813	1119	1292	Kankakee
Kendall County, IL HMFA	667	808	1081	1555	1887	Kendall
Macoupin County, IL HMFA	429	468	627	832	995	Macoupin
Peoria, IL MSA	467	572	742	940	1095	Marshall, Peoria, Stark, Tazewell, Woodford
Rockford, IL MSA	519	573	767	1008	1151	Boone, Winnebago
Springfield, IL MSA	515	591	768	1005	1053	Menard, Sangamon
St. Louis, MO-IL HMFA	551	637	830	1096	1269	Calhoun, Clinton, Jersey, Madison, Monroe, St. Clair
Williamson County, IL HMFA	497	514	688	973	1201	Williamson

NONMETROPOLITAN COUNTIES	0 BR	1 BR	2 BR	3 BR	4 BR	NONMETROPOLITAN COUNTIES	0 BR	1 BR	2 BR	3 BR	4 BR
Adams	401	486	650	880	903	Brown	453	515	689	855	995
Bureau	424	513	687	909	942	Carroll	465	468	627	778	906
Cass	515	520	627	853	945	Christian	441	478	640	794	929
Clark	412	468	627	778	1037	Clay	412	542	627	785	906
Coles	499	502	642	936	937	Crawford	412	537	627	778	866
Cumberland	412	513	627	802	906	Douglas	439	499	668	829	916
Edgar	412	468	627	785	906	Edwards	387	513	627	778	920
Effingham	412	468	627	914	940	Fayette	450	468	627	821	959
Franklin	412	468	627	778	985	Fulton	412	512	627	831	1067
Gallatin	412	507	627	903	906	Greene	412	528	627	778	989
Hamilton	412	468	627	778	906	Hancock	413	490	627	778	906
Hardin	412	468	627	778	906	Henderson	412	474	627	778	995
Iroquois	476	481	627	831	1063	Jasper	412	537	627	903	906
Jefferson	418	472	627	785	957	Jo Daviess	412	542	627	856	917
Johnson	412	492	627	778	1001	Knox	387	468	627	778	859
La Salle	429	520	696	984	1005	Lawrence	465	468	627	856	859
Lee	519	523	654	897	939	Livingston	403	488	653	867	895
Logan	412	468	627	831	859	McDonough	453	591	734	911	1034
Marion	389	471	631	860	902	Mason	412	468	627	778	906
Massac	437	495	662	821	1156	Montgomery	425	552	689	855	966
Morgan	406	483	647	839	887	Moultrie	412	522	627	856	936
Ogle	428	474	635	877	1047	Perry	509	518	627	813	940
Pike	440	468	627	859	981	Pope	412	474	627	903	906
Pulaski	412	473	627	778	906	Putnam	434	515	670	831	968
Randolph	397	483	637	859	999	Richland	412	468	627	887	954
Saline	465	468	627	892	900	Schuyler	412	532	627	845	906

SCHEDULE B - FY 2016 PROPOSED FAIR MARKET RENTS FOR EXISTING HOUSING PAGE 12

ILLINOIS continued

NONMETROPOLITAN COUNTIES	0 BR	1 BR	2 BR	3 BR	4 BR	NONMETROPOLITAN COUNTIES	0 BR	1 BR	2 BR	3 BR	4 BR
Scott	412	468	627	778	859	Shelby	412	468	627	778	985
Stephenson	420	468	627	789	859	Union	387	468	627	865	912
Wabash	412	468	627	838	859	Warren	417	474	634	864	869
Washington	424	482	645	800	884	Wayne	412	483	627	778	906
White	435	468	627	790	1004	Whiteside	512	515	646	817	921

INDIANA

METROPOLITAN FMR AREAS	0 BR	1 BR	2 BR	3 BR	4 BR	Counties of FMR AREA within STATE
Anderson, IN HMFA	428	518	694	908	1048	Madison
Bloomington, IN HMFA	670	709	913	1241	1594	Monroe
Carroll County, IN HMFA	501	504	638	871	875	Carroll
Cincinnati, OH-KY-IN..HMFA	502	591	775	1085	1277	Dearborn, Ohio
Columbus, IN MSA	519	651	778	980	1066	Bartholomew
Elkhart-Goshen, IN MSA	476	578	772	959	1109	Elkhart
Evansville, IN-KY MSA	537	574	743	922	1018	Posey, Vanderburgh, Warrick
Fort Wayne, IN MSA	484	549	699	900	1000	Allen, Wells, Whitley
Gary, IN HMFA	528	698	856	1093	1173	Lake, Newton, Porter
Indianapolis-Carmel-Anderson, IN HMFA	546	644	800	1072	1217	Boone, Brown, Hamilton, Hancock, Hendricks, Johnson, Marion, Morgan, Shelby
Jasper County, IN HMFA	554	555	743	922	1282	Jasper
Kokomo, IN MSA	452	497	665	899	912	Howard
Lafayette-West Lafayette, IN HMFA	603	670	822	1117	1435	Benton, Tippecanoe
Louisville, KY-IN HMFA	545	637	808	1111	1261	Clark, Floyd, Harrison
Michigan City-La Porte, IN MSA	463	560	750	974	1028	LaPorte
Muncie, IN MSA	540	598	781	1028	1301	Delaware
Owen County, IN HMFA	464	582	738	975	1288	Owen
Putnam County, IN HMFA	521	524	638	930	1114	Putnam
Scott County, IN HMFA	520	557	746	1028	1208	Scott
South Bend-Mishawaka, IN HMFA	488	620	778	982	1066	St. Joseph
Sullivan County, IN HMFA	430	584	697	865	955	Sullivan
Terre Haute, IN HMFA	425	515	689	855	944	Clay, Vermillion, Vigo
Union County, IN HMFA	524	551	638	792	1009	Union
Washington County, IN HMFA	454	511	651	912	946	Washington

NONMETROPOLITAN COUNTIES	0 BR	1 BR	2 BR	3 BR	4 BR	NONMETROPOLITAN COUNTIES	0 BR	1 BR	2 BR	3 BR	4 BR
Adams	451	481	642	854	1059	Blackford	451	480	642	871	1024
Cass	426	480	642	797	961	Clinton	410	505	665	877	1020
Crawford	451	480	642	797	911	Daviess	451	480	642	880	884
Decatur	449	557	728	903	998	DeKalb	447	505	642	842	1021
Dubois	488	491	642	936	1121	Fayette	436	482	645	851	918
Fountain	471	547	670	853	918	Franklin	408	494	661	820	906
Fulton	451	491	642	797	880	Gibson	451	524	642	869	976
Grant	451	480	642	842	935	Greene	396	491	642	797	1060
Henry	475	480	642	825	882	Huntington	432	487	652	863	894
Jackson	454	532	646	929	1018	Jay	451	485	642	877	880

SCHEDULE B - FY 2016 PROPOSED FAIR MARKET RENTS FOR EXISTING HOUSING PAGE 13

INDIANA continued

NONMETROPOLITAN COUNTIES	0 BR	1 BR	2 BR	3 BR	4 BR	NONMETROPOLITAN COUNTIES	0 BR	1 BR	2 BR	3 BR	4 BR
Jefferson	402	541	651	897	924	Jennings	495	527	705	885	966
Knox	485	488	653	867	895	Kosciusko	422	531	684	867	938
LaGrange	451	525	642	868	895	Lawrence	405	491	657	815	1082
Marshall	507	508	680	844	932	Martin	451	500	642	936	1121
Miami	451	555	642	900	1121	Montgomery	512	522	699	917	958
Noble	398	527	642	831	1063	Orange	451	480	642	837	1020
Parke	451	498	642	843	1121	Perry	451	480	642	877	880
Pike	451	480	642	838	1067	Pulaski	396	480	642	797	880
Randolph	451	519	642	925	1019	Ripley	420	495	663	862	1046
Rush	454	483	646	802	895	Spencer	396	480	642	833	880
Starke	412	499	668	837	1154	Steuben	497	528	707	897	969
Switzerland	524	557	746	1087	1160	Tipton	484	543	689	873	944
Wabash	470	482	642	797	880	Warren	452	513	644	880	883
Wayne	444	498	656	831	899	White	451	540	642	877	880

IOWA

METROPOLITAN FMR AREAS	0 BR	1 BR	2 BR	3 BR	4 BR	Counties of FMR AREA within STATE
Ames, IA MSA	503	627	769	1071	1217	Story
Benton County, IA HMFA	472	475	611	836	980	Benton
Bremer County, IA HMFA	444	487	641	875	879	Bremer
Cedar Rapids, IA HMFA	446	540	723	1035	1110	Linn
Davenport-Moline-Rock Island, IA-IL MSA	444	550	704	925	982	Scott
Des Moines-West Des Moines, IA MSA	570	674	834	1136	1234	Dallas, Guthrie, Madison, Polk, Warren
Dubuque, IA MSA	434	521	698	900	1030	Dubuque
Iowa City, IA HMFA	546	658	853	1243	1489	Johnson
Jones County, IA HMFA	404	489	655	884	978	Jones
Omaha-Council Bluffs, NE-IA HMFA	509	658	826	1113	1218	Harrison, Mills, Pottawattamie
Plymouth County, IA HMFA	383	469	621	771	863	Plymouth
Sioux City, IA-NE-SD HMFA	433	524	702	875	1002	Woodbury
Washington County, IA HMFA	439	516	690	937	1116	Washington
Waterloo-Cedar Falls, IA HMFA	472	562	720	960	1184	Black Hawk, Grundy

NONMETROPOLITAN COUNTIES	0 BR	1 BR	2 BR	3 BR	4 BR	NONMETROPOLITAN COUNTIES	0 BR	1 BR	2 BR	3 BR	4 BR
Adair	432	456	611	758	837	Adams	432	456	611	890	1003
Allamakee	432	456	611	790	845	Appanoose	432	456	611	758	837
Audubon	432	465	611	866	1024	Boone	418	519	626	855	858
Buchanan	474	477	639	873	876	Buena Vista	466	477	617	860	944
Butler	485	488	611	863	866	Calhoun	432	528	611	820	837
Carroll	479	481	611	784	843	Cass	432	511	611	789	880
Cedar	450	475	636	843	881	Cerro Gordo	418	508	678	893	1017
Cherokee	432	456	611	772	841	Chickasaw	432	504	611	834	837
Clarke	421	509	682	851	1191	Clay	432	456	611	879	1067
Clayton	391	513	611	823	936	Clinton	422	498	666	869	1017

SCHEDULE B - FY 2016 PROPOSED FAIR MARKET RENTS FOR EXISTING HOUSING PAGE 14

IOWA continued

NONMETROPOLITAN COUNTIES	0 BR	1 BR	2 BR	3 BR	4 BR	NONMETROPOLITAN COUNTIES	0 BR	1 BR	2 BR	3 BR	4 BR
Crawford	432	528	611	758	837	Davis	440	465	623	773	854
Decatur	432	456	611	834	837	Delaware	469	472	611	845	992
Des Moines	479	514	688	872	1006	Dickinson	437	472	618	790	946
Emmet	432	483	611	834	837	Fayette	432	456	611	775	837
Floyd	432	492	611	834	837	Franklin	458	461	611	834	837
Fremont	432	457	611	787	906	Greene	432	456	611	758	968
Hamilton	402	486	651	829	985	Hancock	432	524	611	802	949
Hardin	432	456	611	834	1009	Henry	495	498	611	834	837
Howard	432	487	611	758	837	Humboldt	432	456	611	807	889
Ida	432	471	611	830	891	Iowa	432	513	611	890	1066
Jackson	432	514	611	834	837	Jasper	400	493	648	820	958
Jefferson	436	528	707	877	969	Keokuk	432	456	611	834	837
Kossuth	432	456	611	890	973	Lee	389	486	630	813	886
Louisa	488	491	657	815	901	Lucas	432	456	611	828	837
Lyon	432	478	611	758	866	Mahaska	469	513	663	859	909
Marion	522	526	704	874	1190	Marshall	459	514	655	867	949
Mitchell	453	456	611	770	837	Monona	453	456	611	799	837
Monroe	440	470	622	772	853	Montgomery	432	485	611	834	837
Muscatine	525	554	742	963	1040	O'Brien	453	456	611	834	837
Osceola	432	456	611	794	837	Page	377	456	611	843	935
Palo Alto	432	468	611	834	837	Pocahontas	432	498	611	817	873
Poweshiek	451	514	638	834	905	Ringgold	432	487	611	758	837
Sac	432	483	611	858	861	Shelby	445	470	629	824	862
Sioux	432	494	611	781	837	Tama	446	471	631	804	873
Taylor	432	508	611	758	867	Union	432	484	611	798	837
Van Buren	432	457	611	890	1067	Wapello	419	508	680	895	932
Wayne	432	456	611	834	837	Webster	476	479	611	849	878
Winnebago	432	456	611	890	909	Winneshiek	449	458	613	771	1070
Worth	432	490	611	789	837	Wright	377	461	611	758	837

KANSAS

METROPOLITAN FMR AREAS	0 BR	1 BR	2 BR	3 BR	4 BR	Counties of FMR AREA within STATE
*Kansas City, MO-KS HMFA	555	712	882	1204	1368	Johnson, Leavenworth, Linn, Miami, Wyandotte
Kingman County, KS HMFA	410	486	651	847	892	Kingman
Lawrence, KS MSA	514	631	825	1202	1440	Douglas
Manhattan, KS MSA	680	684	901	1313	1570	Pottawatomie, Riley
St. Joseph, MO-KS MSA	475	516	691	865	1101	Doniphan
Sumner County, KS HMFA	410	486	651	808	961	Sumner
Topeka, KS MSA	443	537	718	982	1182	Jackson, Jefferson, Osage, Shawnee, Wabaunsee
Wichita, KS HMFA	452	550	733	999	1130	Butler, Harvey, Sedgwick

SCHEDULE B - FY 2016 PROPOSED FAIR MARKET RENTS FOR EXISTING HOUSING PAGE 15

KANSAS continued

NONMETROPOLITAN COUNTIES	0 BR	1 BR	2 BR	3 BR	4 BR
Allen	469	540	651	945	949
Atchison	480	498	666	901	976
Barton	402	506	651	833	1094
Brown	469	486	651	825	892
Chautauqua	499	517	692	859	1014
Cheyenne	469	562	651	808	892
Clay	533	553	740	1033	1060
Coffey	469	486	651	931	1046
Cowley	408	494	661	870	939
Decatur	469	486	651	882	954
Edwards	469	486	651	947	1022
Ellis	473	521	651	936	1074
Finney	447	559	724	898	1207
Franklin	551	616	764	948	1149
Gove	469	486	651	810	892
Grant	469	486	651	808	954
Greeley	469	486	651	949	1075
Hamilton	536	556	744	923	1091
Haskell	599	621	831	1031	1139
Jewell	469	543	651	808	892
Kiowa	469	562	651	949	954
Lane	469	486	651	808	954
Logan	469	486	651	815	1075
McPherson	499	518	693	860	950
Marshall	483	486	651	872	983
Mitchell	469	487	651	889	892
Morris	469	536	651	900	903
Nemaha	469	562	651	949	1028
Ness	402	486	651	889	892
Osborne	469	562	651	873	954
Pawnee	469	490	651	857	954
Pratt	473	502	656	814	899
Reno	454	526	704	924	1042
Rice	469	486	651	949	1090
Rush	469	562	651	857	892
Saline	533	542	725	927	994
Seward	526	605	730	948	1103
Sherman	472	489	655	857	1116
Stafford	469	486	651	808	892
Stevens	514	533	713	885	1045
Trego	494	593	686	851	1006
Washington	469	486	651	808	892

NONMETROPOLITAN COUNTIES	0 BR	1 BR	2 BR	3 BR	4 BR
Anderson	469	562	651	949	954
Barber	469	486	651	817	954
Bourbon	409	495	663	823	909
Chase	469	486	651	857	892
Cherokee	469	486	651	816	955
Clark	469	486	651	857	1107
Cloud	469	486	651	808	892
Comanche	492	510	683	848	1001
Crawford	528	531	695	983	1191
Dickinson	402	497	651	865	1050
Elk	469	562	651	949	954
Ellsworth	469	486	651	808	892
Ford	478	514	669	873	1012
Geary	649	653	846	1233	1477
Graham	469	486	651	808	954
Gray	469	541	651	829	892
Greenwood	469	486	651	861	1044
Harper	469	486	651	933	1084
Hodgeman	469	486	651	808	954
Kearny	469	486	651	832	954
Labette	469	486	651	808	1053
Lincoln	469	486	651	808	892
Lyon	402	486	651	889	892
Marion	469	486	651	808	892
Meade	469	486	651	808	892
Montgomery	483	486	651	897	1074
Morton	469	562	651	808	954
Neosho	469	486	651	850	892
Norton	469	497	651	949	954
Ottawa	491	509	681	853	1035
Phillips	469	494	651	842	954
Rawlins	469	486	651	808	954
Republic	469	491	651	808	892
Rooks	469	536	651	841	892
Russell	509	527	706	876	968
Scott	607	629	842	1045	1234
Sheridan	469	509	651	808	954
Smith	469	562	651	949	954
Stanton	469	486	651	818	968
Thomas	469	553	651	949	1011
Wallace	469	486	651	949	954
Wichita	469	486	651	949	954

SCHEDULE B - FY 2016 PROPOSED FAIR MARKET RENTS FOR EXISTING HOUSING PAGE 16

KANSAS continued

NONMETROPOLITAN COUNTIES	0 BR	1 BR	2 BR	3 BR	4 BR
Wilson	469	486	651	833	989
Woodson	469	486	651	808	954

KENTUCKY

METROPOLITAN FMR AREAS	0 BR	1 BR	2 BR	3 BR	4 BR	Counties of FMR AREA within STATE
Allen County, KY HMFA	436	479	615	885	888	Allen
Bowling Green, KY HMFA	541	558	716	960	1105	Edmonson, Warren
Butler County, KY HMFA	436	479	615	860	1074	Butler
Cincinnati, OH-KY-IN..HMFA	502	591	775	1085	1277	Boone, Bracken, Campbell, Gallatin, Kenton, Pendleton
Clarksville, TN-KY MSA	508	598	788	1065	1175	Christian, Trigg
Elizabethtown, KY HMFA	440	478	640	933	1117	Hardin, Larue
Evansville, IN-KY MSA	537	574	743	922	1018	Henderson
Grant County, KY HMFA	467	539	721	1011	1091	Grant
Huntington-Ashland, WV-KY-OH HMFA	402	519	651	880	1052	Boyd, Greenup
Lexington-Fayette, KY MSA	527	610	787	1130	1362	Bourbon, Clark, Fayette, Jessamine, Scott, Woodford
Louisville, KY-IN HMFA	545	637	808	1111	1261	Bullitt, Henry, Jefferson, Oldham, Spencer, Trimble
Meade County, KY HMFA	462	502	672	979	1173	Meade
Owensboro, KY MSA	486	489	655	822	963	Daviess, Hancock, McLean
Shelby County, KY HMFA	562	602	806	1106	1302	Shelby

NONMETROPOLITAN COUNTIES	0 BR	1 BR	2 BR	3 BR	4 BR	NONMETROPOLITAN COUNTIES	0 BR	1 BR	2 BR	3 BR	4 BR
Adair	379	459	615	840	843	Anderson	610	641	743	1031	1093
Ballard	441	459	615	857	872	Barren	452	471	631	814	1015
Bath	441	459	615	827	872	Bell	379	493	615	799	843
Boyle	511	514	688	923	1092	Breathitt	441	486	615	810	1074
Breckinridge	441	497	615	780	843	Caldwell	441	527	615	854	872
Calloway	462	530	675	884	925	Carlisle	460	480	642	797	911
Carroll	480	511	670	902	1040	Carter	441	516	615	786	931
Casey	441	494	615	869	872	Clay	441	500	615	763	872
Clinton	441	459	615	783	872	Crittenden	441	490	615	814	872
Cumberland	441	459	615	763	872	Elliott	441	494	615	869	872
Estill	505	525	615	859	895	Fleming	441	531	615	869	872
Floyd	441	499	615	811	872	Franklin	540	602	753	1090	1106
Fulton	441	459	615	840	843	Garrard	463	519	646	836	928
Graves	441	531	615	775	1049	Grayson	441	511	615	869	872
Green	441	494	615	763	843	Harlan	475	479	615	775	864
Harrison	389	531	615	783	954	Hart	482	485	615	840	843
Hickman	441	531	615	820	872	Hopkins	455	489	635	861	1008
Jackson	546	569	762	946	1044	Johnson	456	459	615	846	849
Knott	441	459	615	773	843	Knox	379	470	615	854	872
Laurel	441	521	615	802	958	Lawrence	441	531	615	850	1074
Lee	441	531	615	763	872	Leslie	512	574	715	926	1014
Letcher	441	459	615	779	877	Lewis	441	531	615	844	915
Lincoln	441	477	615	820	929	Livingston	445	537	621	848	851

SCHEDULE B - FY 2016 PROPOSED FAIR MARKET RENTS FOR EXISTING HOUSING PAGE 17

KENTUCKY continued

NONMETROPOLITAN COUNTIES	0 BR	1 BR	2 BR	3 BR	4 BR	NONMETROPOLITAN COUNTIES	0 BR	1 BR	2 BR	3 BR	4 BR
Logan	491	494	628	779	861	Lyon	441	459	615	827	843
McCracken	489	546	682	913	935	McCreary	441	525	615	869	872
Madison	505	508	680	980	1101	Magoffin	441	459	615	763	843
Marion	457	477	638	792	905	Marshall	534	557	745	924	1059
Martin	441	531	615	896	1074	Mason	467	486	651	897	923
Menifee	441	531	615	794	872	Mercer	444	465	619	826	1003
Metcalfe	447	466	624	774	885	Monroe	441	488	615	786	843
Montgomery	414	501	671	900	1171	Morgan	505	531	615	813	980
Muhlenberg	441	531	615	767	1074	Nelson	490	511	684	997	1091
Nicholas	441	487	615	882	1074	Ohio	441	529	615	896	1074
Owen	442	461	617	784	875	Owsley	441	494	615	796	872
Perry	441	459	615	840	843	Pike	530	533	714	922	979
Powell	441	459	615	840	843	Pulaski	459	498	641	830	954
Robertson	497	522	693	860	983	Rockcastle	441	459	615	799	872
Rowan	443	568	719	892	1003	Russell	379	459	615	791	1074
Simpson	510	614	711	953	1009	Taylor	436	478	640	794	877
Todd	441	531	615	763	896	Union	505	511	615	767	872
Washington	454	526	634	787	869	Wayne	441	489	615	803	843
Webster	441	459	615	763	843	Whitley	470	490	656	814	1107
Wolfe	441	459	615	763	843						

LOUISIANA

METROPOLITAN FMR AREAS	0 BR	1 BR	2 BR	3 BR	4 BR	Counties of FMR AREA within STATE
Acadia Parish, LA HMFA	410	430	575	785	788	Acadia
Alexandria, LA MSA	547	573	717	969	1130	Grant, Rapides
Baton Rouge, LA HMFA	587	719	832	1044	1315	Ascension, East Baton Rouge, East Feliciana, Livingston, Pointe Coupee, St. Helena, West Baton Rouge, West Feliciana
Hammond, LA MSA	599	617	774	960	1116	Tangipahoa
Houma-Thibodaux, LA MSA	632	636	847	1161	1477	Lafourche, Terrebonne
Iberia Parish, LA HMFA	519	522	699	867	958	Iberia
Iberville Parish, LA HMFA	454	468	627	805	992	Iberville
Lafayette, LA HMFA	598	749	867	1126	1329	Lafayette, St. Martin
Lake Charles, LA MSA	464	597	753	981	1156	Calcasieu, Cameron
Monroe, LA MSA	555	558	728	907	998	Ouachita, Union
New Orleans-Metairie, LA HMFA	662	778	952	1205	1448	Jefferson, Orleans, Plaquemines, St. Bernard, St. Charles, St. John the Baptist, St. Tammany
Shreveport-Bossier City, LA HMFA	573	683	809	1020	1109	Bossier, Caddo, De Soto
St. James Parish, LA HMFA	405	494	572	834	868	St. James
Vermilion Parish, LA HMFA	397	542	627	885	984	Vermilion
Webster Parish, LA HMFA	468	471	578	776	876	Webster

NONMETROPOLITAN COUNTIES	0 BR	1 BR	2 BR	3 BR	4 BR	NONMETROPOLITAN COUNTIES	0 BR	1 BR	2 BR	3 BR	4 BR
Allen	470	487	572	781	784	Assumption	442	445	589	858	918
Avoyelles	358	427	572	773	868	Beauregard	470	494	572	806	999

SCHEDULE B - FY 2016 PROPOSED FAIR MARKET RENTS FOR EXISTING HOUSING PAGE 18

LOUISIANA continued

NONMETROPOLITAN COUNTIES	0 BR	1 BR	2 BR	3 BR	4 BR	NONMETROPOLITAN COUNTIES	0 BR	1 BR	2 BR	3 BR	4 BR
Bienville	470	494	572	781	784	Caldwell	470	494	572	834	994
Catahoula	470	494	572	834	999	Claiborne	450	453	572	834	999
Concordia	424	427	572	834	868	East Carroll	438	441	572	727	868
Evangeline	353	427	572	722	868	Franklin	424	427	572	710	999
Jackson	424	427	572	831	999	Jefferson Davis	470	494	572	781	784
La Salle	424	427	572	821	868	Lincoln	554	555	675	856	1102
Madison	424	427	572	738	784	Morehouse	446	449	572	711	868
Natchitoches	482	486	644	815	883	Red River	429	432	578	842	877
Richland	424	427	572	722	999	Sabine	449	494	572	735	999
St. Landry	366	443	593	748	813	St. Mary	479	483	631	888	949
Tensas	424	427	572	762	868	Vernon	525	636	852	1057	1195
Washington	439	442	592	735	943	West Carroll	353	427	572	719	784
Winn	470	494	572	781	784						

MAINE

METROPOLITAN FMR AREAS	0 BR	1 BR	2 BR	3 BR	4 BR	Components of FMR AREA within STATE
Bangor, ME HMFA	631	697	881	1101	1290	Penobscot County towns of Bangor city, Brewer city, Eddington town, Glenburn town, Hampden town, Hermon town, Holden town, Kenduskeag town, Milford town, Old Town city, Orono town, Orrington town, Penobscot Indian Island Reservation, Veazie town
Cumberland County, ME (part) HMFA	675	716	951	1386	1581	Cumberland County towns of Baldwin town, Bridgton town, Brunswick town, Harpswell town, Harrison town, Naples town, New Gloucester town, Pownal town, Sebago town
Lewiston-Auburn, ME MSA	517	609	768	976	1115	Androscoggin County towns of Auburn city, Durham town, Greene town, Leeds town, Lewiston city, Lisbon town, Livermore town, Livermore Falls town, Mechanic Falls town, Minot town, Poland town, Sabattus town, Turner town, Wales town
Penobscot County, ME (part) HMFA	508	604	751	973	1127	Penobscot County towns of Alton town, Argyle UT, Bradford town, Bradley town, Burlington town, Carmel town, Carroll plantation, Charleston town, Chester town, Clifton town, Corinna town, Corinth town, Dexter town, Dixmont town, Drew plantation, East Central Penobscot UT, East Millinocket town, Edinburg town, Enfield town, Etna town, Exeter town, Garland town, Greenbush town, Howland town, Hudson town, Kingman UT, Lagrange town, Lakeville town, Lee town, Levant town, Lincoln town, Lowell town, Mattawamkeag town, Maxfield town, Medway town, Millinocket town, Mount Chase town, Newburgh town, Newport town, North Penobscot UT, Passadumkeag town, Patten town, Plymouth town, Prentiss UT, Seboeis plantation, Springfield town, Stacyville town, Stetson town, Twombly UT, Webster plantation, Whitney UT, Winn town, Woodville town
Portland, ME HMFA	754	875	1096	1472	1543	Cumberland County towns of Chebeague Island town Cumberland County towns of Cape Elizabeth town, Casco town,

SCHEDULE B - FY 2016 PROPOSED FAIR MARKET RENTS FOR EXISTING HOUSING PAGE 19

MAINE continued

METROPOLITAN FMR AREAS	0 BR	1 BR	2 BR	3 BR	4 BR	Components of FMR AREA within STATE
						Cumberland town, Falmouth town, Freeport town, Frye Island town, Gorham town, Gray town, Long Island town, North Yarmouth town, Portland city, Raymond town, Scarborough town, South Portland city, Standish town, Westbrook city, Windham town, Yarmouth town York County towns of Buxton town, Hollis town, Limington town, Old Orchard Beach town
Sagadahoc County, ME HMFA	628	766	886	1171	1379	Sagadahoc County towns of Arrowsic town, Bath city, Bowdoin town, Bowdoinham town, Georgetown town, Perkins UT, Phippsburg town, Richmond town, Topsham town, West Bath town, Woolwich town
York County, ME (part) HMFA	659	773	956	1292	1310	York County towns of Acton town, Alfred town, Arundel town, Biddeford city, Cornish town, Dayton town, Kennebunk town, Kennebunkport town, Lebanon town, Limerick town, Lyman town, Newfield town, North Berwick town, Ogunquit town, Parsonsfield town, Saco city, Sanford town, Shapleigh town, Waterboro town, Wells town
York-Kittery-South Berwick, ME HMFA	838	908	1182	1521	1860	York County towns of Berwick town, Eliot town, Kittery town, South Berwick town, York town

NONMETROPOLITAN COUNTIES	0 BR	1 BR	2 BR	3 BR	4 BR	Towns within nonmetropolitan counties
Aroostook County, ME	518	546	651	831	892	Allagash town, Amity town, Ashland town, Bancroft town, Blaine town, Bridgewater town, Caribou city, Cary plantation, Castle Hill town, Caswell town, Central Aroostook UT, Chapman town, Connor UT, Crystal town, Cyr plantation, Dyer Brook town, Eagle Lake town, Easton town, Fort Fairfield town, Fort Kent town, Frenchville town, Garfield plantation, Glenwood plantation, Grand Isle town, Hamlin town, Hammond town, Haynesville town, Hersey town, Hodgdon town, Houlton town, Island Falls town, Limestone town, Linneus town, Littleton town, Ludlow town, Macwahoc plantation, Madawaska town, Mapleton town, Mars Hill town, Masardis town, Merrill town, Monticello town, Moro plantation, Nashville plantation, New Canada town, New Limerick town, New Sweden town, Northwest Aroostook UT, Oakfield town, Orient town, Oxbow plantation, Penobscot Indian Island Reservation, Perham town, Portage Lake town, Presque Isle city, Reed plantation, St. Agatha town, St. Francis town, St. John plantation, Sherman town, Smyrna town, South Aroostook UT, Square Lake UT, Stockholm town, Van Buren town, Wade town, Wallagrass town, Washburn town, Westfield town, Westmanland town, Weston town, Winterville plantation, Woodland town
Franklin County, ME	517	573	663	823	991	Avon town, Carrabassett Valley town, Carthage town, Chesterville town, Coplin plantation, Dallas plantation, East Central Franklin UT, Eustis town, Farmington town, Industry town, Jay town, Kingfield town, Madrid town,

SCHEDULE B - FY 2016 PROPOSED FAIR MARKET RENTS FOR EXISTING HOUSING PAGE 20

MAINE continued

NONMETROPOLITAN COUNTIES	0 BR	1 BR	2 BR	3 BR	4 BR	Towns within nonmetropolitan counties
						New Sharon town, New Vineyard town, North Franklin UT, Phillips town, Rangeley town, Rangeley plantation, Sandy River plantation, South Franklin UT, Strong town, Temple town, Weld town, West Central Franklin UT, Wilton town, Wyman UT
Hancock County, ME	557	650	837	1063	1147	Amherst town, Aurora town, Bar Harbor town, Blue Hill town, Brooklin town, Brooksville town, Bucksport town, Castine town, Central Hancock UT, Cranberry Isles town, Dedham town, Deer Isle town, Eastbrook town, East Hancock UT, Ellsworth city, Franklin town, Frenchboro town, Gouldsboro town, Great Pond town, Hancock town, Lamoine town, Mariaville town, Marshall Island UT, Mount Desert town, Northwest Hancock UT, Orland town, Osborn town, Otis town, Penobscot town, Sedgwick town, Sorrento town, Southwest Harbor town, Stonington town, Sullivan town, Surry town, Swans Island town, Tremont town, Trenton town, Verona Island town, Waltham town, Winter Harbor town
Kennebec County, ME	549	594	746	965	1024	Albion town, Augusta city, Belgrade town, Benton town, Chelsea town, China town, Clinton town, Farmingdale town, Fayette town, Gardiner city, Hallowell city, Litchfield town, Manchester town, Monmouth town, Mount Vernon town, Oakland town, Pittston town, Randolph town, Readfield town, Rome town, Sidney town, Unity UT, Vassalboro town, Vienna town, Waterville city, Wayne town, West Gardiner town, Windsor town, Winslow town, Winthrop town
Knox County, ME	657	661	873	1083	1230	Appleton town, Camden town, Criehaven UT, Cushing town, Friendship town, Hope town, Isle au Haut town, Matinicus Isle plantation, Muscle Ridge Island UT, North Haven town, Owls Head town, Rockland city, Rockport town, St. George town, South Thomaston town, Thomaston town, Union town, Vinalhaven town, Warren town, Washington town
Lincoln County, ME	545	666	825	1024	1241	Alna town, Boothbay town, Boothbay Harbor town, Bremen town, Bristol town, Damariscotta town, Dresden town, Edgecomb town, Hibberts gore, Jefferson town, Louds Island UT, Monhegan plantation, Newcastle town, Nobleboro town, Somerville town, South Bristol town, Southport town, Waldoboro town, Westport Island town, Whitefield town, Wiscasset town
Oxford County, ME	508	543	651	935	1137	Andover town, Bethel town, Brownfield town, Buckfield town, Byron town, Canton town, Denmark town, Dixfield town, Fryeburg town, Gilead town, Greenwood town, Hanover town, Hartford town, Hebron town, Hiram town, Lincoln plantation, Lovell town, Magalloway plantation, Mexico town, Milton UT, Newry town, North Oxford UT, Norway town, Otisfield town, Oxford town, Paris town, Peru town, Porter town, Roxbury town, Rumford town, South Oxford UT, Stoneham town, Stow town, Sumner town, Sweden town, Upton town, Waterford town, West Paris town, Woodstock town

SCHEDULE B - FY 2016 PROPOSED FAIR MARKET RENTS FOR EXISTING HOUSING PAGE 21

MAINE continued

NONMETROPOLITAN COUNTIES	0 BR	1 BR	2 BR	3 BR	4 BR	Towns within nonmetropolitan counties
Piscataquis County, ME	508	562	651	889	936	Abbot town, Atkinson town, Beaver Cove town, Blanchard UT, Bowerbank town, Brownville town, Dover-Foxcroft town, Greenville town, Guilford town, Kingsbury plantation, Lake View plantation, Medford town, Milo town, Monson town, Northeast Piscataquis UT, Northwest Piscataquis UT, Parkman town, Sangerville town, Sebec town, Shirley town, Southeast Piscataquis UT, Wellington town, Willimantic town
Somerset County, ME	549	572	699	881	958	Anson town, Athens town, Bingham town, Brighton plantation, Cambridge town, Canaan town, Caratunk town, Central Somerset UT, Cornville town, Dennistown plantation, Detroit town, Embden town, Fairfield town, Harmony town, Hartland town, Highland plantation, Jackman town, Madison town, Mercer town, Moose River town, Moscow town, New Portland town, Norridgewock town, Northeast Somerset UT, Northwest Somerset UT, Palmyra town, Pittsfield town, Pleasant Ridge plantation, Ripley town, St. Albans town, Seboomook Lake UT, Skowhegan town, Smithfield town, Solon town, Starks town, The Forks plantation, West Forks plantation
Waldo County, ME	576	635	739	986	1031	Belfast city, Belmont town, Brooks town, Burnham town, Frankfort town, Freedom town, Islesboro town, Jackson town, Knox town, Liberty town, Lincolnville town, Monroe town, Montville town, Morrill town, Northport town, Palermo town, Prospect town, Searsmont town, Searsport town, Stockton Springs town, Swanville town, Thorndike town, Troy town, Unity town, Waldo town, Winterport town
Washington County, ME	525	539	651	839	985	Addison town, Alexander town, Baileyville town, Baring plantation, Beals town, Beddington town, Calais city, Centerville town, Charlotte town, Cherryfield town, Codyville plantation, Columbia town, Columbia Falls town, Cooper town, Crawford town, Cutler town, Danforth town, Deblois town, Dennysville town, East Central Washington UT, East Machias town, Eastport city, Grand Lake Stream plantation, Harrington town, Jonesboro town, Jonesport town, Lubec town, Machias town, Machiasport town, Marshfield town, Meddybemps town, Milbridge town, Northfield town, North Washington UT, Passamaquoddy Indian Township Reservation, Passamaquoddy Pleasant Point Reservation, Pembroke town, Perry town, Princeton town, Robbinston town, Roque Bluffs town, Steuben town, Talmadge town, Topsfield town, Vanceboro town, Waite town, Wesley town, Whiting town, Whitneyville town

MARYLAND

METROPOLITAN FMR AREAS	0 BR	1 BR	2 BR	3 BR	4 BR	Counties of FMR AREA within STATE
Baltimore-Columbia-Towson, MD MSA	778	945	1187	1520	1769	Anne Arundel, Baltimore, Carroll, Harford, Howard,

SCHEDULE B - FY 2016 PROPOSED FAIR MARKET RENTS FOR EXISTING HOUSING PAGE 22

MARYLAND continued

METROPOLITAN FMR AREAS	0 BR	1 BR	2 BR	3 BR	4 BR	Counties of FMR AREA within STATE
						Queen Anne's, Baltimore city
California-Lexington Park, MD MSA	806	983	1142	1556	1994	St. Mary's
Cumberland, MD-WV MSA	446	562	651	899	1100	Allegany
Hagerstown, MD HMFA	547	670	887	1209	1483	Washington
*Philadelphia-Camden-Wilmington, PA-NJ-DE-MD MSA	820	992	1196	1484	1639	Cecil
Salisbury, MD HMFA	583	706	945	1183	1524	Wicomico
Somerset County, MD HMFA	494	614	711	1016	1022	Somerset
*Washington-Arlington-Alexandria, DC-VA-MD HMFA	1292	1386	1604	2119	2694	Calvert, Charles, Frederick, Montgomery, Prince George's
Worcester County, MD HMFA	603	668	863	1177	1507	Worcester

NONMETROPOLITAN COUNTIES	0 BR	1 BR	2 BR	3 BR	4 BR	NONMETROPOLITAN COUNTIES	0 BR	1 BR	2 BR	3 BR	4 BR
Caroline	612	616	825	1146	1242	Dorchester	636	640	804	1074	1102
Garrett	426	544	680	844	1139	Kent	633	637	853	1058	1489
Talbot	660	800	1070	1328	1545						

MASSACHUSETTS

METROPOLITAN FMR AREAS	0 BR	1 BR	2 BR	3 BR	4 BR	Components of FMR AREA within STATE
Barnstable Town, MA MSA	975	1076	1440	1811	1974	Barnstable County towns of Barnstable Town city, Bourne town, Brewster town, Chatham town, Dennis town, Eastham town, Falmouth town, Harwich town, Mashpee town, Orleans town, Provincetown town, Sandwich town, Truro town, Wellfleet town, Yarmouth town
Berkshire County, MA (part) HMFA	758	796	923	1145	1265	Berkshire County towns of Alford town, Becket town, Clarksburg town, Egremont town, Florida town, Great Barrington town, Hancock town, Monterey town, Mount Washington town, New Ashford town, New Marlborough town, North Adams city, Otis town, Peru town, Sandisfield town, Savoy town, Sheffield town, Tyringham town, Washington town, West Stockbridge town, Williamstown town, Windsor town
Boston-Cambridge-Quincy, MA-NH HMFA	1044	1247	1549	1922	2123	Essex County towns of Amesbury Town city, Beverly city, Danvers town, Essex town, Gloucester city, Hamilton town, Ipswich town, Lynn city, Lynnfield town, Manchester-by-the-Sea town, Marblehead town, Middleton town, Nahant town, Newbury town, Newburyport city, Peabody city, Rockport town, Rowley town, Salem city, Salisbury town, Saugus town, Swampscott town, Topsfield town, Wenham town Middlesex County towns of Acton town, Arlington town, Ashby town, Ashland town, Ayer town, Bedford town, Belmont town, Boxborough town, Burlington town, Cambridge city, Carlisle town, Concord town, Everett city, Framingham town, Holliston town, Hopkinton town, Hudson town, Lexington town, Lincoln town, Littleton town, Malden city, Marlborough city, Maynard town, Medford city, Melrose city, Natick town, Newton city, North Reading town, Reading town, Sherborn town, Shirley town, Somerville city, Stoneham town, Stow town, Sudbury town, Townsend town, Wakefield town,

SCHEDULE B - FY 2016 PROPOSED FAIR MARKET RENTS FOR EXISTING HOUSING PAGE 23

MASSACHUSETTS continued

METROPOLITAN FMR AREAS	0 BR	1 BR	2 BR	3 BR	4 BR	Components of FMR AREA within STATE
						Waltham city, Watertown city, Wayland town, Weston town, Wilmington town, Winchester town, Woburn city Norfolk County towns of Bellingham town, Braintree Town city, Brookline town, Canton town, Cohasset town, Dedham town, Dover town, Foxborough town, Franklin Town city, Holbrook town, Medfield town, Medway town, Millis town, Milton town, Needham town, Norfolk town, Norwood town, Plainville town, Quincy city, Randolph town, Sharon town, Stoughton town, Walpole town, Wellesley town, Westwood town, Weymouth Town city, Wrentham town Plymouth County towns of Carver town, Duxbury town, Hanover town, Hingham town, Hull town, Kingston town, Marshfield town, Norwell town, Pembroke town, Plymouth town, Rockland town, Scituate town, Wareham town Suffolk County towns of Boston city, Chelsea city, Revere city, Winthrop Town city
Brockton, MA HMFA	825	911	1185	1555	1624	Norfolk County towns of Avon town Plymouth County towns of Abington town, Bridgewater town, Brockton city, East Bridgewater town, Halifax town, Hanson town, Lakeville town, Marion town, Mattapoisett town, Middleborough town, Plympton town, Rochester town, West Bridgewater town, Whitman town
Eastern Worcester County, MA HMFA	730	853	1080	1462	1656	Worcester County towns of Berlin town, Blackstone town, Bolton town, Harvard town, Hopedale town, Lancaster town, Mendon town, Milford town, Millville town, Southborough town, Upton town
Easton-Raynham, MA HMFA	939	963	1289	1879	1953	Bristol County towns of Easton town, Raynham town
Fitchburg-Leominster, MA HMFA	606	752	983	1220	1409	Worcester County towns of Ashburnham town, Fitchburg city, Gardner city, Leominster city, Lunenburg town, Templeton town, Westminster town, Winchendon town
Franklin County, MA (part) HMFA	685	732	908	1127	1358	Franklin County towns of Ashfield town, Bernardston town, Buckland town, Charlemont town, Colrain town, Conway town, Deerfield town, Erving town, Gill town, Greenfield Town city, Hawley town, Heath town, Leverett town, Leyden town, Monroe town, Montague town, New Salem town, Northfield town, Orange town, Rowe town, Shelburne town, Shutesbury town, Warwick town, Wendell town, Whately town
Lawrence, MA-NH HMFA	767	897	1159	1438	1589	Essex County towns of Andover town, Boxford town, Georgetown town, Groveland town, Haverhill city, Lawrence city, Merrimac town, Methuen city, North Andover town, West Newbury town
Lowell, MA HMFA	793	949	1199	1488	1659	Middlesex County towns of Billerica town, Chelmsford town, Dracut town, Dunstable town, Groton town, Lowell city, Pepperell town, Tewksbury town, Tyngsborough town, Westford town
New Bedford, MA HMFA	572	712	854	1060	1171	Bristol County towns of Acushnet town, Dartmouth town, Fairhaven town, Freetown town, New Bedford city
Pittsfield, MA HMFA	523	681	832	1032	1188	Berkshire County towns of Adams town, Cheshire town, Dalton town, Hinsdale town, Lanesborough town, Lee town, Lenox town, Pittsfield city, Richmond town, Stockbridge town

SCHEDULE B - FY 2016 PROPOSED FAIR MARKET RENTS FOR EXISTING HOUSING PAGE 24

MASSACHUSETTS continued

METROPOLITAN FMR AREAS	0 BR	1 BR	2 BR	3 BR	4 BR	Components of FMR AREA within STATE
Providence-Fall River, RI-MA HMFA	647	791	960	1191	1434	Bristol County towns of Attleboro city, Fall River city, North Attleborough town, Rehoboth town, Seekonk town, Somerset town, Swansea town, Westport town
Springfield, MA HMFA	626	793	989	1227	1444	Franklin County towns of Sunderland town Hampden County towns of Agawam Town city, Blandford town, Brimfield town, Chester town, Chicopee city, East Longmeadow town, Granville town, Hampden town, Holland town, Holyoke city, Longmeadow town, Ludlow town, Monson town, Montgomery town, Palmer Town city, Russell town, Southwick town, Springfield city, Tolland town, Wales town, Westfield city, West Springfield Town city, Wilbraham town Hampshire County towns of Amherst town, Belchertown town, Chesterfield town, Cummington town, Easthampton Town city, Goshen town, Granby town, Hadley town, Hatfield town, Huntington town, Middlefield town, Northampton city, Pelham town, Plainfield town, Southampton town, South Hadley town, Ware town, Westhampton town, Williamsburg town, Worthington town
Taunton-Mansfield-Norton, MA HMFA	773	827	1061	1335	1472	Bristol County towns of Berkley town, Dighton town, Mansfield town, Norton town, Taunton city
Western Worcester County, MA HMFA	531	669	786	1060	1372	Worcester County towns of Athol town, Hardwick town, Hubbardston town, New Braintree town, Petersham town, Phillipston town, Royalston town, Warren town
Worcester, MA HMFA	700	831	1050	1303	1465	Worcester County towns of Auburn town, Barre town, Boylston town, Brookfield town, Charlton town, Clinton town, Douglas town, Dudley town, East Brookfield town, Grafton town, Holden town, Leicester town, Millbury town, Northborough town, Northbridge town, North Brookfield town, Oakham town, Oxford town, Paxton town, Princeton town, Rutland town, Shrewsbury town, Southbridge Town city, Spencer town, Sterling town, Sturbridge town, Sutton town, Uxbridge town, Webster town, Westborough town, West Boylston town, West Brookfield town, Worcester city

NONMETROPOLITAN COUNTIES	0 BR	1 BR	2 BR	3 BR	4 BR	Towns within nonmetropolitan counties
Dukes County, MA	947	994	1330	1816	1823	Aquinnah town, Chilmark town, Edgartown town, Gosnold town, Oak Bluffs town, Tisbury town, West Tisbury town
Nantucket County, MA	912	1246	1479	1882	2027	Nantucket town

MICHIGAN

METROPOLITAN FMR AREAS	0 BR	1 BR	2 BR	3 BR	4 BR	Counties of FMR AREA within STATE
Ann Arbor, MI MSA	759	841	1007	1380	1758	Washtenaw
Barry County, MI HMFA	462	529	676	985	1122	Barry
Battle Creek, MI MSA	439	567	710	925	1001	Calhoun
Bay City, MI MSA	419	511	679	911	931	Bay
Cass County, MI HMFA	532	536	717	979	983	Cass

SCHEDULE B - FY 2016 PROPOSED FAIR MARKET RENTS FOR EXISTING HOUSING PAGE 25

MICHIGAN continued

METROPOLITAN FMR AREAS	0 BR	1 BR	2 BR	3 BR	4 BR	Counties of FMR AREA within STATE
Detroit-Warren-Livonia, MI HMFA	526	651	853	1134	1220	Lapeer, Macomb, Oakland, St. Clair, Wayne
Flint, MI MSA	450	545	729	953	1078	Genesee
Grand Rapids-Wyoming, MI HMFA	515	620	767	1079	1214	Kent
Holland-Grand Haven, MI HMFA	507	640	741	1013	1017	Ottawa
Jackson, MI MSA	458	576	743	1004	1027	Jackson
Kalamazoo-Portage, MI MSA	497	605	760	1015	1220	Kalamazoo, Van Buren
Lansing-East Lansing, MI MSA	540	679	838	1120	1322	Clinton, Eaton, Ingham
Livingston County, MI HMFA	538	651	854	1204	1491	Livingston
Midland, MI MSA	500	591	769	1056	1179	Midland
Monroe, MI MSA	519	596	798	1091	1094	Monroe
Montcalm County, MI HMFA	490	508	651	911	1085	Montcalm
Muskegon, MI MSA	495	561	751	1047	1065	Muskegon
Niles-Benton Harbor, MI MSA	429	519	695	892	1052	Berrien
Saginaw, MI MSA	432	542	700	922	959	Saginaw

NONMETROPOLITAN COUNTIES	0 BR	1 BR	2 BR	3 BR	4 BR	NONMETROPOLITAN COUNTIES	0 BR	1 BR	2 BR	3 BR	4 BR
Alcona	468	489	651	808	1137	Alger	468	486	651	820	1137
Allegan	591	593	720	973	987	Alpena	468	510	651	917	1137
Antrim	408	509	662	964	1153	Arenac	488	516	651	932	1137
Baraga	468	486	651	808	892	Benzie	559	563	700	968	1106
Branch	511	514	664	895	910	Charlevoix	549	552	675	838	1119
Cheboygan	468	513	651	924	952	Chippewa	452	497	665	825	912
Clare	468	492	651	838	892	Crawford	479	498	667	828	1165
Delta	468	504	651	939	1061	Dickinson	468	486	651	808	1137
Emmet	521	568	761	948	1195	Gladwin	468	555	651	949	1137
Gogebic	468	486	651	830	1005	Grand Traverse	564	657	868	1185	1190
Gratiot	468	486	651	842	1056	Hillsdale	450	515	651	883	935
Houghton	430	486	651	808	987	Huron	495	498	651	880	1012
Ionia	511	514	688	936	1037	Iosco	402	510	651	857	912
Iron	464	486	651	808	1062	Isabella	478	577	694	929	1011
Kalkaska	482	501	671	881	980	Keweenaw	468	486	651	909	912
Lake	468	486	651	863	1052	Leelanau	569	658	792	990	1086
Lenawee	524	554	705	875	966	Luce	468	486	651	897	900
Mackinac	468	514	651	808	912	Manistee	468	486	651	889	892
Marquette	448	542	713	885	977	Mason	468	486	651	875	912
Mecosta	468	550	651	889	892	Menominee	468	517	651	899	907
Missaukee	468	562	651	889	892	Montmorency	481	501	670	935	939
Newaygo	468	516	651	855	892	Oceana	468	486	651	874	892
Ogemaw	473	492	659	818	926	Ontonagon	468	530	651	909	912
Osceola	468	488	651	882	977	Oscoda	496	516	691	857	947
Otsego	483	537	672	947	1030	Presque Isle	468	562	651	937	1137
Roscommon	468	486	651	925	941	St. Joseph	464	495	663	869	947
Sanilac	421	486	651	916	976	Schoolcraft	468	511	651	808	1088
Shiawassee	444	507	679	900	931	Tuscola	402	502	651	908	1044

SCHEDULE B - FY 2016 PROPOSED FAIR MARKET RENTS FOR EXISTING HOUSING PAGE 26

MICHIGAN continued

NONMETROPOLITAN COUNTIES	0 BR	1 BR	2 BR	3 BR	4 BR
Wexford	517	537	719	967	986

MINNESOTA

METROPOLITAN FMR AREAS	0 BR	1 BR	2 BR	3 BR	4 BR	Counties of FMR AREA within STATE
Duluth, MN-WI MSA	488	570	746	960	1110	Carlton, St. Louis
Fargo, ND-MN MSA	483	593	762	1111	1224	Clay
Fillmore County, MN HMFA	402	501	651	889	892	Fillmore
Grand Forks, ND-MN MSA	516	620	823	1107	1340	Polk
La Crosse-Onalaska, WI-MN MSA	505	611	818	1170	1428	Houston
Le Sueur County, MN HMFA	433	524	702	942	1133	Le Sueur
Mankato-North Mankato, MN MSA	580	658	805	1105	1405	Blue Earth, Nicollet
Mille Lacs County, MN HMFA	484	615	785	1064	1296	Mille Lacs
Minneapolis-St. Paul-Bloomington, MN-WI HMFA	648	804	1015	1427	1673	Anoka, Carver, Chisago, Dakota, Hennepin, Isanti, Ramsey, Scott, Sherburne, Washington, Wright
Rochester, MN HMFA	565	673	897	1163	1536	Dodge, Olmsted
Sibley County, MN HMFA	419	486	651	949	1017	Sibley
St. Cloud, MN MSA	537	582	727	976	1269	Benton, Stearns
Wabasha County, MN HMFA	433	543	685	998	1196	Wabasha

NONMETROPOLITAN COUNTIES	0 BR	1 BR	2 BR	3 BR	4 BR	NONMETROPOLITAN COUNTIES	0 BR	1 BR	2 BR	3 BR	4 BR
Aitkin	511	515	689	879	944	Becker	404	492	655	870	898
Beltrami	453	549	735	938	1007	Big Stone	414	537	651	838	892
Brown	414	493	651	808	892	Cass	531	535	716	888	1042
Chippewa	438	515	690	942	946	Clearwater	414	486	651	856	892
Cook	464	650	752	933	1290	Cottonwood	414	524	651	891	895
Crow Wing	486	589	788	1034	1080	Douglas	423	512	686	891	1198
Faribault	414	486	651	889	892	Freeborn	414	486	651	808	991
Goodhue	515	577	773	990	1184	Grant	414	562	651	949	1112
Hubbard	414	486	651	949	1137	Itasca	457	537	719	892	986
Jackson	414	510	651	868	892	Kanabec	486	571	765	949	1315
Kandiyohi	431	506	678	885	1041	Kittson	414	486	651	889	1013
Koochiching	414	486	651	889	892	Lac qui Parle	414	486	651	808	892
Lake	510	618	827	1026	1134	Lake of the Woods	414	486	651	838	892
Lincoln	414	486	651	808	892	Lyon	478	486	651	949	1137
McLeod	423	536	686	957	1075	Mahnomen	414	505	651	808	935
Marshall	495	498	651	911	1023	Martin	414	486	651	808	892
Meeker	455	595	738	916	1012	Morrison	414	486	651	839	1023
Mower	462	543	727	934	996	Murray	414	531	651	808	1137
Nobles	506	509	682	889	952	Norman	414	486	651	889	892
Otter Tail	414	486	651	891	917	Pennington	402	486	651	820	892
Pine	486	571	765	949	1117	Pipestone	414	562	651	946	950
Pope	461	542	725	972	994	Red Lake	414	517	651	851	892
Redwood	414	486	651	871	892	Renville	493	502	651	808	946

SCHEDULE B - FY 2016 PROPOSED FAIR MARKET RENTS FOR EXISTING HOUSING PAGE 27

MINNESOTA continued

NONMETROPOLITAN COUNTIES	0 BR	1 BR	2 BR	3 BR	4 BR	NONMETROPOLITAN COUNTIES	0 BR	1 BR	2 BR	3 BR	4 BR
Rice	570	671	898	1224	1415	Rock	414	486	651	934	951
Roseau	414	486	651	808	892	Steele	485	570	763	1026	1332
Stevens	414	556	651	814	981	Swift	483	486	651	949	1137
Todd	414	486	651	808	892	Traverse	414	486	651	808	892
Wadena	414	486	651	808	976	Waseca	414	486	651	900	903
Watonwan	414	499	651	889	892	Wilkin	414	486	651	889	892
Winona	446	542	712	971	1076	Yellow Medicine	414	492	651	883	1028

MISSISSIPPI

METROPOLITAN FMR AREAS	0 BR	1 BR	2 BR	3 BR	4 BR	Counties of FMR AREA within STATE
Benton County, MS HMFA	479	538	631	895	1005	Benton
Gulfport-Biloxi, MS HMFA	650	672	791	1071	1259	Hancock, Harrison
Hattiesburg, MS MSA	532	604	723	990	1010	Forrest, Lamar, Perry
Jackson, MS HMFA	522	678	821	1039	1173	Copiah, Hinds, Madison, Rankin
Marshall County, MS HMFA	468	471	631	840	1005	Marshall
Memphis, TN-MS-AR HMFA	595	692	817	1114	1293	DeSoto
Pascagoula, MS HMFA	623	645	759	1075	1293	Jackson
Simpson County, MS HMFA	453	545	631	812	934	Simpson
Tate County, MS HMFA	501	504	675	847	1078	Tate
Tunica County, MS HMFA	546	575	665	825	1059	Tunica
Yazoo County, MS HMFA	461	479	641	795	879	Yazoo

NONMETROPOLITAN COUNTIES	0 BR	1 BR	2 BR	3 BR	4 BR	NONMETROPOLITAN COUNTIES	0 BR	1 BR	2 BR	3 BR	4 BR
Adams	493	563	704	874	989	Alcorn	443	517	633	877	906
Amite	442	511	631	829	895	Attala	442	513	631	846	865
Bolivar	492	495	631	828	930	Calhoun	442	471	631	845	1023
Carroll	451	522	645	832	897	Chickasaw	389	471	631	783	949
Choctaw	442	507	631	874	878	Claiborne	442	511	631	783	878
Clarke	459	567	656	872	899	Clay	442	495	632	795	944
Coahoma	399	559	647	803	917	Covington	442	471	631	874	878
Franklin	442	471	631	838	878	George	442	511	631	814	878
Greene	518	545	631	814	878	Grenada	442	536	631	859	865
Holmes	442	545	631	787	865	Humphreys	442	471	631	783	925
Issaquena	442	511	631	814	878	Itawamba	442	527	631	895	976
Jasper	442	511	631	814	878	Jefferson	442	471	631	869	878
Jefferson Davis	442	471	631	874	878	Jones	440	569	713	885	977
Kemper	451	522	644	799	896	Lafayette	598	705	855	1125	1172
Lauderdale	513	574	733	997	1041	Lawrence	453	483	647	803	900
Leake	442	510	631	802	1096	Lee	490	544	700	901	1009
Leflore	414	483	644	823	883	Lincoln	468	471	631	783	896
Lowndes	476	585	680	949	952	Marion	442	518	631	807	915
Monroe	442	471	631	783	892	Montgomery	442	511	631	847	878
Neshoba	442	477	631	832	865	Newton	460	492	658	872	1123

SCHEDULE B - FY 2016 PROPOSED FAIR MARKET RENTS FOR EXISTING HOUSING PAGE 28

MISSISSIPPI continued

NONMETROPOLITAN COUNTIES	0 BR	1 BR	2 BR	3 BR	4 BR
Noxubee	442	545	631	858	878
Panola	442	545	631	845	917
Pike	488	521	698	866	957
Prentiss	442	545	631	827	1006
Scott	442	497	631	808	878
Smith	405	471	631	866	878
Sunflower	438	516	631	844	1102
Tippah	442	546	632	784	866
Union	442	545	631	850	891
Warren	551	554	692	859	958
Wayne	389	511	631	805	1102
Wilkinson	547	584	782	970	1072
Yalobusha	442	500	631	859	878

NONMETROPOLITAN COUNTIES	0 BR	1 BR	2 BR	3 BR	4 BR
Oktibbeha	509	652	776	983	1079
Pearl River	465	553	665	969	1092
Pontotoc	442	511	631	907	952
Quitman	389	484	631	783	878
Sharkey	442	477	631	783	865
Stone	502	582	718	891	999
Tallahatchie	404	545	631	826	913
Tishomingo	442	538	631	920	1020
Walthall	442	511	631	840	865
Washington	499	508	631	866	925
Webster	518	545	631	869	878
Winston	442	511	631	907	1102

MISSOURI

METROPOLITAN FMR AREAS	0 BR	1 BR	2 BR	3 BR	4 BR	Counties of FMR AREA within STATE
Bates County, MO HMFA	401	468	626	874	975	Bates
Callaway County, MO HMFA	465	468	626	881	998	Callaway
Cape Girardeau, MO-IL MSA	465	488	651	890	972	Bollinger, Cape Girardeau
Columbia, MO MSA	580	648	816	1134	1425	Boone
Dallas County, MO HMFA	449	468	626	777	921	Dallas
Jefferson City, MO HMFA	467	473	626	912	938	Cole, Osage
Joplin, MO MSA	480	500	659	906	920	Jasper, Newton
*Kansas City, MO-KS HMFA	555	712	882	1204	1368	Caldwell, Cass, Clay, Clinton, Jackson, Lafayette, Platte, Ray
McDonald County, MO HMFA	465	468	626	839	888	McDonald
Moniteau County, MO HMFA	386	475	626	777	998	Moniteau
Polk County, MO HMFA	449	468	626	899	1093	Polk
Springfield, MO HMFA	462	516	678	988	1013	Christian, Greene, Webster
St. Joseph, MO-KS MSA	475	516	691	865	1101	Andrew, Buchanan, DeKalb
St. Louis, MO-IL HMFA	551	637	830	1096	1269	Sullivan city part of Crawford, Franklin, Jefferson, Lincoln, St. Charles, St. Louis, Warren, St. Louis city

NONMETROPOLITAN COUNTIES	0 BR	1 BR	2 BR	3 BR	4 BR
Adair	443	465	623	894	1088
Audrain	474	520	696	864	1040
Barton	398	488	623	789	854
Butler	430	472	632	784	947
Carroll	424	465	623	773	931
Cedar	435	477	639	793	974
Clark	384	465	623	908	931
Crawford	489	492	659	857	1034
Daviess	424	516	623	908	931
Douglas	424	465	623	893	931

NONMETROPOLITAN COUNTIES	0 BR	1 BR	2 BR	3 BR	4 BR
Atchison	424	465	623	851	854
Barry	424	530	623	790	854
Benton	435	478	640	874	877
Camden	452	568	665	825	1124
Carter	493	544	630	887	918
Chariton	424	465	623	787	875
Cooper	424	489	623	888	936
Dade	424	465	623	773	854
Dent	437	480	643	810	881
Dunklin	452	465	623	883	1029

SCHEDULE B - FY 2016 PROPOSED FAIR MARKET RENTS FOR EXISTING HOUSING PAGE 29

MISSOURI continued

NONMETROPOLITAN COUNTIES	0 BR	1 BR	2 BR	3 BR	4 BR
Gasconade	424	465	623	908	1057
Grundy	384	465	623	908	944
Henry	461	506	677	944	989
Holt	424	465	623	807	976
Howell	422	465	623	789	1030
Johnson	440	533	714	1039	1215
Laclede	447	465	623	866	1002
Lewis	411	465	623	834	931
Livingston	462	465	623	869	1023
Madison	466	512	685	850	939
Marion	386	468	626	830	858
Miller	442	514	649	832	890
Monroe	424	465	623	789	1088
Morgan	400	484	648	804	888
Nodaway	437	480	643	822	939
Ozark	424	538	623	805	931
Perry	449	517	660	931	974
Phelps	426	515	690	916	1167
Pulaski	503	616	816	1189	1425
Ralls	450	495	662	821	1156
Reynolds	424	465	623	773	931
St. Clair	424	486	623	773	854
St. Francois	462	465	623	845	926
Schuyler	384	465	623	774	854
Scott	387	468	627	802	859
Shelby	424	465	623	817	854
Stone	463	574	750	946	1061
Taney	515	578	669	968	1168
Vernon	428	518	694	883	951
Wayne	424	492	623	773	1084
Wright	424	465	623	812	1074

NONMETROPOLITAN COUNTIES	0 BR	1 BR	2 BR	3 BR	4 BR
Gentry	424	465	623	776	854
Harrison	437	480	643	798	881
Hickory	441	465	623	773	952
Howard	424	494	623	851	854
Iron	424	531	623	872	1088
Knox	424	465	623	788	1076
Lawrence	443	465	623	869	1088
Linn	424	465	623	773	854
Macon	384	465	623	892	910
Maries	424	538	623	906	1036
Mercer	427	469	628	896	938
Mississippi	452	497	665	825	994
Montgomery	432	474	635	817	873
New Madrid	424	465	623	804	900
Oregon	424	509	623	789	854
Pemiscot	424	465	623	791	854
Pettis	520	524	701	975	1007
Pike	424	468	623	908	917
Putnam	424	465	623	908	931
Randolph	433	499	637	798	1081
Ripley	424	465	623	812	1088
Ste. Genevieve	436	550	641	880	883
Saline	428	465	623	856	947
Scotland	424	465	623	827	931
Shannon	384	465	623	773	931
Stoddard	424	465	623	798	854
Sullivan	476	522	699	867	1045
Texas	384	465	623	908	1024
Washington	468	472	623	773	931
Worth	424	465	623	773	931

MONTANA

METROPOLITAN FMR AREAS	0 BR	1 BR	2 BR	3 BR	4 BR	Counties of FMR AREA within STATE
Billings, MT HMFA	506	572	766	1067	1179	Carbon, Yellowstone
Golden Valley County, MT HMFA	424	489	651	916	1058	Golden Valley
Great Falls, MT MSA	510	552	729	1015	1224	Cascade
Missoula, MT MSA	638	713	874	1258	1526	Missoula

SCHEDULE B - FY 2016 PROPOSED FAIR MARKET RENTS FOR EXISTING HOUSING PAGE 30

MONTANA continued

NONMETROPOLITAN COUNTIES	0 BR	1 BR	2 BR	3 BR	4 BR	NONMETROPOLITAN COUNTIES	0 BR	1 BR	2 BR	3 BR	4 BR
Beaverhead	470	526	651	875	1137	Big Horn	470	526	651	852	1079
Blaine	470	534	651	808	892	Broadwater	569	589	788	978	1306
Carter	470	562	651	921	1079	Chouteau	470	562	651	837	954
Custer	501	562	651	949	1063	Daniels	470	518	651	921	1079
Dawson	470	562	651	846	1103	Deer Lodge	470	562	651	899	1137
Fallon	470	529	651	843	1079	Fergus	470	562	651	815	892
Flathead	484	582	746	1087	1237	Gallatin	525	631	779	1135	1360
Garfield	470	518	651	949	1079	Glacier	535	562	651	808	1079
Granite	525	543	727	902	1205	Hill	470	486	651	852	946
Jefferson	503	609	815	1011	1351	Judith Basin	470	562	651	808	1079
Lake	431	562	651	871	1101	Lewis and Clark	646	657	850	1239	1484
Liberty	470	518	651	808	1079	Lincoln	402	553	651	808	1137
McCone	470	562	651	881	1079	Madison	526	629	728	903	998
Meagher	470	498	651	869	1079	Mineral	470	562	651	889	892
Musselshell	443	549	670	948	1111	Park	512	598	801	998	1398
Petroleum	514	565	711	1006	1179	Phillips	529	562	651	808	1086
Pondera	470	562	651	949	1137	Powder River	480	496	664	824	1101
Powell	470	562	651	949	1079	Prairie	470	518	651	921	1079
Ravalli	537	541	724	960	1014	Richland	470	562	651	868	1079
Roosevelt	470	514	651	886	892	Rosebud	470	555	651	808	892
Sanders	476	537	651	849	1057	Sheridan	470	562	651	931	1079
Silver Bow	517	537	691	857	1206	Stillwater	479	535	692	960	1208
Sweet Grass	488	504	675	838	1119	Teton	430	509	682	846	1148
Toole	470	562	651	944	1137	Treasure	539	593	746	1055	1237
Valley	470	562	651	808	892	Wheatland	470	518	651	921	1079
Wibaux	470	518	651	921	1079						

NEBRASKA

METROPOLITAN FMR AREAS	0 BR	1 BR	2 BR	3 BR	4 BR	Counties of FMR AREA within STATE
Hall County, NE HMFA	414	502	672	891	921	Hall
Hamilton County, NE HMFA	384	465	623	877	1088	Hamilton
Howard County, NE HMFA	384	465	623	773	854	Howard
Lincoln, NE HMFA	464	563	753	1060	1270	Lancaster
Merrick County, NE HMFA	384	538	623	908	917	Merrick
Omaha-Council Bluffs, NE-IA HMFA	509	658	826	1113	1218	Cass, Douglas, Sarpy, Washington
Saunders County, NE HMFA	454	532	712	926	1094	Saunders
Seward County, NE HMFA	417	485	623	894	1088	Seward
Sioux City, IA-NE-SD HMFA	433	524	702	875	1002	Dakota, Dixon

NONMETROPOLITAN COUNTIES	0 BR	1 BR	2 BR	3 BR	4 BR	NONMETROPOLITAN COUNTIES	0 BR	1 BR	2 BR	3 BR	4 BR
Adams	416	477	639	817	893	Antelope	406	475	623	781	854
Arthur	503	577	773	968	1064	Banner	421	483	646	809	889

SCHEDULE B - FY 2016 PROPOSED FAIR MARKET RENTS FOR EXISTING HOUSING PAGE 31

NEBRASKA continued

NONMETROPOLITAN COUNTIES	0 BR	1 BR	2 BR	3 BR	4 BR	NONMETROPOLITAN COUNTIES	0 BR	1 BR	2 BR	3 BR	4 BR
Blaine	426	489	654	819	900	Boone	406	538	623	773	854
Box Butte	406	534	623	842	915	Boyd	406	538	623	780	939
Brown	426	489	654	812	896	Buffalo	417	505	676	909	1059
Burt	419	480	643	881	885	Butler	406	465	623	908	938
Cedar	406	465	623	848	1024	Chase	406	465	623	780	854
Cherry	406	465	623	773	858	Cheyenne	406	503	623	851	854
Clay	406	504	623	773	854	Colfax	415	477	638	823	901
Cuming	406	465	623	773	864	Custer	406	465	623	773	854
Dawes	408	468	627	856	859	Dawson	441	476	637	790	891
Deuel	406	465	623	854	858	Dodge	437	530	709	885	972
Dundy	406	465	623	854	858	Fillmore	406	511	623	869	1042
Franklin	406	465	623	908	1088	Frontier	424	486	651	808	892
Furnas	406	465	623	773	858	Gage	431	477	639	813	879
Garden	406	465	623	773	892	Garfield	430	494	661	820	906
Gosper	406	465	623	773	907	Grant	406	465	623	780	858
Greeley	406	465	623	811	854	Harlan	406	465	623	773	854
Hayes	432	495	663	830	913	Hitchcock	406	465	623	773	854
Holt	406	498	623	773	889	Hooker	532	610	817	1023	1125
Jefferson	406	465	623	773	858	Johnson	406	465	623	851	854
Kearney	468	536	718	935	984	Keith	406	467	623	778	854
Keya Paha	406	465	623	780	858	Kimball	438	503	673	835	922
Knox	406	538	623	908	1088	Lincoln	418	506	678	841	929
Logan	406	465	623	773	858	Loup	406	465	623	780	858
McPherson	406	465	623	780	858	Madison	404	489	655	830	1099
Morrill	406	465	623	804	918	Nance	406	465	623	773	973
Nemaha	462	465	623	836	946	Nuckolls	406	538	623	851	854
Otoe	406	488	623	908	1088	Pawnee	406	465	623	851	854
Perkins	406	465	623	773	858	Phelps	406	465	623	851	1032
Pierce	406	538	623	773	1001	Platte	498	501	623	826	953
Polk	406	487	623	773	854	Red Willow	406	476	623	818	985
Richardson	406	538	623	908	941	Rock	406	465	623	854	858
Saline	468	536	718	891	993	Scotts Bluff	419	502	672	834	956
Sheridan	406	538	623	790	854	Sherman	406	538	623	908	1088
Sioux	406	465	623	780	858	Stanton	406	511	623	908	970
Thayer	406	489	623	835	918	Thomas	406	465	623	773	858
Thurston	406	465	623	773	854	Valley	406	465	623	818	858
Wayne	406	465	623	894	1088	Webster	406	465	623	804	854
Wheeler	406	465	623	780	858	York	406	514	623	813	858

NEVADA

METROPOLITAN FMR AREAS	0 BR	1 BR	2 BR	3 BR	4 BR	Counties of FMR AREA within STATE
Carson City, NV MSA	525	643	831	1211	1451	Carson

SCHEDULE B - FY 2016 PROPOSED FAIR MARKET RENTS FOR EXISTING HOUSING PAGE 32

NEVADA continued

METROPOLITAN FMR AREAS	0 BR	1 BR	2 BR	3 BR	4 BR	Counties of FMR AREA within STATE
Las Vegas-Henderson-Paradise, NV MSA	625	772	957	1395	1671	Clark
Reno, NV MSA	567	703	920	1341	1606	Storey, Washoe

NONMETROPOLITAN COUNTIES	0 BR	1 BR	2 BR	3 BR	4 BR	NONMETROPOLITAN COUNTIES	0 BR	1 BR	2 BR	3 BR	4 BR
Churchill	633	637	853	1058	1411	Douglas	584	702	930	1355	1624
Elko	522	632	846	1156	1400	Esmeralda	402	562	651	911	1077
Eureka	504	610	817	1143	1352	Humboldt	504	612	817	1066	1352
Lander	437	530	709	999	1173	Lincoln	402	524	651	876	1077
Lyon	498	604	808	1172	1360	Mineral	402	486	651	911	1077
Nye	463	539	718	1034	1185	Pershing	402	486	651	949	1077
White Pine	479	671	777	1061	1065						

NEW HAMPSHIRE

METROPOLITAN FMR AREAS	0 BR	1 BR	2 BR	3 BR	4 BR	Components of FMR AREA within STATE
Boston-Cambridge-Quincy, MA-NH HMFA	1044	1247	1549	1922	2123	Rockingham County towns of Seabrook town, South Hampton town
Hillsborough County, NH (part) HMFA	650	851	1024	1271	1708	Hillsborough County towns of Antrim town, Bennington town, Deering town, Francestown town, Greenfield town, Hancock town, Hillsborough town, Lyndeborough town, New Boston town, Peterborough town, Sharon town, Temple town, Windsor town
Lawrence, MA-NH HMFA	767	897	1159	1438	1589	Rockingham County towns of Atkinson town, Chester town, Danville town, Derry town, Fremont town, Hampstead town, Kingston town, Newton town, Plaistow town, Raymond town, Salem town, Sandown town, Windham town
Manchester, NH HMFA	766	919	1147	1423	1618	Hillsborough County towns of Bedford town, Goffstown town, Manchester city, Weare town
Nashua, NH HMFA	749	924	1215	1667	1940	Hillsborough County towns of Amherst town, Brookline town, Greenville town, Hollis town, Hudson town, Litchfield town, Mason town, Merrimack town, Milford town, Mont Vernon town, Nashua city, New Ipswich town, Pelham town, Wilton town
Portsmouth-Rochester, NH HMFA	832	872	1094	1473	1660	Rockingham County towns of Brentwood town, East Kingston town, Epping town, Exeter town, Greenland town, Hampton town, Hampton Falls town, Kensington town, New Castle town, Newfields town, Newington town, Newmarket town, North Hampton town, Portsmouth city, Rye town, Stratham town Strafford County towns of Barrington town, Dover city, Durham town, Farmington town, Lee town, Madbury town, Middleton town, Milton town, New Durham town, Rochester city, Rollinsford town, Somersworth city, Strafford town
Western Rockingham County, NH HMFA	971	1001	1340	1663	1837	Rockingham County towns of Auburn town, Candia town, Deerfield town, Londonderry town, Northwood town, Nottingham town

SCHEDULE B - FY 2016 PROPOSED FAIR MARKET RENTS FOR EXISTING HOUSING PAGE 33

NEW HAMPSHIRE continued

NONMETROPOLITAN COUNTIES	0 BR	1 BR	2 BR	3 BR	4 BR	Towns within nonmetropolitan counties
Belknap County, NH	660	720	964	1294	1321	Alton town, Barnstead town, Belmont town, Center Harbor town, Gilford town, Gilmanton town, Laconia city, Meredith town, New Hampton town, Sanbornton town, Tilton town
Carroll County, NH	677	728	949	1178	1301	Albany town, Bartlett town, Brookfield town, Chatham town, Conway town, Eaton town, Effingham town, Freedom town, Hale's location, Hart's Location town, Jackson town, Madison town, Moultonborough town, Ossipee town, Sandwich town, Tamworth town, Tuftonboro town, Wakefield town, Wolfeboro town
Cheshire County, NH	661	804	1038	1323	1490	Alstead town, Chesterfield town, Dublin town, Fitzwilliam town, Gilsum town, Harrisville town, Hinsdale town, Jaffrey town, Keene city, Marlborough town, Marlow town, Nelson town, Richmond town, Rindge town, Roxbury town, Stoddard town, Sullivan town, Surry town, Swanzey town, Troy town, Walpole town, Westmoreland town, Winchester town
Coos County, NH	463	584	676	878	1077	Atkinson and Gilmanton Academy grant, Beans grant, Beans purchase, Berlin city, Cambridge township, Carroll town, Chandlers purchase, Clarksville town, Colebrook town, Columbia town, Crawfords purchase, Cutts grant, Dalton town, Dixs grant, Dixville township, Dummer town, Errol town, Ervings location, Gorham town, Greens grant, Hadleys purchase, Jefferson town, Kilkenny township, Lancaster town, Low and Burbanks grant, Martins location, Milan town, Millsfield township, Northumberland town, Odell township, Pinkhams grant, Pittsburg town, Randolph town, Sargents purchase, Second College grant, Shelburne town, Stark town, Stewartstown town, Stratford town, Success township, Thompson and Meserves purchase, Wentworth location, Whitefield town
Grafton County, NH	695	742	954	1202	1345	Alexandria town, Ashland town, Bath town, Benton town, Bethlehem town, Bridgewater town, Bristol town, Campton town, Canaan town, Dorchester town, Easton town, Ellsworth town, Enfield town, Franconia town, Grafton town, Groton town, Hanover town, Haverhill town, Hebron town, Holderness town, Landaff town, Lebanon city, Lincoln town, Lisbon town, Littleton town, Livermore town, Lyman town, Lyme town, Monroe town, Orange town, Orford town, Piermont town, Plymouth town, Rumney town, Sugar Hill town, Thornton town, Warren town, Waterville Valley town, Wentworth town, Woodstock town
Merrimack County, NH	670	807	1007	1346	1571	Allenstown town, Andover town, Boscawen town, Bow town, Bradford town, Canterbury town, Chichester town, Concord city, Danbury town, Dunbarton town, Epsom town, Franklin city, Henniker town, Hill town, Hooksett town, Hopkinton town, Loudon town, Newbury town, New London town, Northfield town, Pembroke town, Pittsfield town, Salisbury town, Sutton town, Warner town, Webster town,

SCHEDULE B - FY 2016 PROPOSED FAIR MARKET RENTS FOR EXISTING HOUSING PAGE 34

NEW HAMPSHIRE continued

NONMETROPOLITAN COUNTIES	0 BR	1 BR	2 BR	3 BR	4 BR	Towns within nonmetropolitan counties
Sullivan County, NH	648	721	947	1273	1315	Wilmot town Acworth town, Charlestown town, Claremont city, Cornish town, Croydon town, Goshen town, Grantham town, Langdon town, Lempster town, Newport town, Plainfield town, Springfield town, Sunapee town, Unity town, Washington town

NEW JERSEY

METROPOLITAN FMR AREAS	0 BR	1 BR	2 BR	3 BR	4 BR	Counties of FMR AREA within STATE
Atlantic City-Hammonton, NJ MSA	788	889	1138	1579	1799	Atlantic
Bergen-Passaic, NJ HMFA	1075	1213	1423	1837	2183	Bergen, Passaic
Jersey City, NJ HMFA	1064	1221	1443	1854	2008	Hudson
Middlesex-Somerset-Hunterdon, NJ HMFA	980	1239	1559	2001	2482	Hunterdon, Middlesex, Somerset
Monmouth-Ocean, NJ HMFA	894	1111	1401	1906	2220	Monmouth, Ocean
Newark, NJ HMFA	1031	1086	1308	1675	1898	Essex, Morris, Sussex, Union
Ocean City, NJ MSA	641	844	1039	1447	1654	Cape May
*Philadelphia-Camden-Wilmington, PA-NJ-DE-MD MSA	820	992	1196	1484	1639	Burlington, Camden, Gloucester, Salem
Trenton, NJ MSA	853	1075	1313	1726	2000	Mercer
Vineland-Bridgeton, NJ MSA	704	886	1116	1425	1639	Cumberland
Warren County, NJ HMFA	803	1001	1209	1500	1804	Warren

NEW MEXICO

METROPOLITAN FMR AREAS	0 BR	1 BR	2 BR	3 BR	4 BR	Counties of FMR AREA within STATE
*Albuquerque, NM MSA	584	758	930	1336	1624	Bernalillo, Sandoval, Torrance, Valencia
Farmington, NM MSA	602	609	777	964	1065	San Juan
Las Cruces, NM MSA	460	535	652	926	1116	Dona Ana
Santa Fe, NM MSA	715	773	932	1238	1299	Santa Fe

NONMETROPOLITAN COUNTIES	0 BR	1 BR	2 BR	3 BR	4 BR	NONMETROPOLITAN COUNTIES	0 BR	1 BR	2 BR	3 BR	4 BR
Catron	477	497	651	949	1043	Chaves	433	499	668	885	1166
Cibola	477	486	651	894	1127	Colfax	477	486	651	808	892
Curry	507	510	674	982	1177	De Baca	477	497	651	868	1043
Eddy	592	596	774	993	1150	Grant	477	562	651	932	1113
Guadalupe	477	562	651	949	1043	Harding	477	497	651	868	1043
Hidalgo	477	562	651	868	1043	Lea	542	545	730	932	1018
Lincoln	533	646	865	1100	1385	Los Alamos	635	769	1029	1304	1797
Luna	476	522	651	949	980	McKinley	471	562	651	808	892
Mora	477	562	651	847	1043	Otero	535	562	651	949	1137
Quay	477	486	651	808	892	Rio Arriba	496	521	651	808	1029
Roosevelt	510	542	697	877	1136	San Miguel	427	562	692	887	1108
Sierra	410	496	664	915	1063	Socorro	496	518	651	869	1137
Taos	577	732	869	1078	1191	Union	477	486	651	917	1043

SCHEDULE B - FY 2016 PROPOSED FAIR MARKET RENTS FOR EXISTING HOUSING PAGE 35

NEW YORK

METROPOLITAN FMR AREAS	0 BR	1 BR	2 BR	3 BR	4 BR	Counties of FMR AREA within STATE
Albany-Schenectady-Troy, NY MSA	677	813	993	1232	1361	Albany, Rensselaer, Saratoga, Schenectady, Schoharie
Binghamton, NY MSA	495	569	721	977	1113	Broome, Tioga
Buffalo-Cheektowaga-Niagara Falls, NY MSA	582	618	746	948	1085	Erie, Niagara
Elmira, NY MSA	561	704	885	1113	1213	Chemung
Glens Falls, NY MSA	555	705	861	1075	1273	Warren, Washington
Ithaca, NY MSA	807	925	1071	1389	1587	Tompkins
Kingston, NY MSA	699	894	1133	1476	1553	Ulster
Nassau-Suffolk, NY HMFA	991	1308	1589	2064	2322	Nassau, Suffolk
New York, NY HMFA	1276	1342	1553	1997	2199	Bronx, Kings, New York, Putnam, Queens, Richmond, Rockland
Poughkeepsie-Newburgh-Middletown, NY HMFA	832	1024	1256	1596	1831	Dutchess, Orange
Rochester, NY HMFA	569	694	853	1058	1169	Livingston, Monroe, Ontario, Orleans, Wayne
Syracuse, NY MSA	539	629	799	1047	1139	Madison, Onondaga, Oswego
Utica-Rome, NY MSA	549	581	732	942	1003	Herkimer, Oneida
Watertown-Fort Drum, NY MSA	664	802	1074	1333	1622	Jefferson
Westchester County, NY Statutory Exception Area	1024	1231	1493	1920	2204	Westchester
Yates County, NY HMFA	427	573	683	888	989	Yates

NONMETROPOLITAN COUNTIES	0 BR	1 BR	2 BR	3 BR	4 BR	NONMETROPOLITAN COUNTIES	0 BR	1 BR	2 BR	3 BR	4 BR
Allegany	505	546	651	824	1019	Cattaraugus	479	560	685	900	1022
Cayuga	528	569	752	986	1138	Chautauqua	530	533	666	891	947
Chenango	552	577	672	959	1056	Clinton	477	648	773	976	1060
Columbia	686	703	912	1151	1343	Cortland	575	601	732	947	1003
Delaware	570	574	721	896	1014	Essex	526	673	834	1035	1143
Franklin	541	566	738	954	1012	Fulton	541	596	717	921	1039
Genesee	488	619	742	992	1078	Greene	633	753	871	1164	1381
Hamilton	516	562	651	893	934	Lewis	535	572	675	881	1045
Montgomery	576	584	727	902	996	Otsego	640	644	813	1059	1184
St. Lawrence	549	610	754	984	1065	Schuyler	516	543	651	904	1137
Seneca	502	605	708	1003	1236	Steuben	535	624	762	970	1077
Sullivan	704	737	888	1189	1475	Wyoming	469	517	667	911	914

NORTH CAROLINA

METROPOLITAN FMR AREAS	0 BR	1 BR	2 BR	3 BR	4 BR	Counties of FMR AREA within STATE
Asheville, NC HMFA	581	656	809	1059	1343	Buncombe, Henderson, Madison
Brunswick County, NC HMFA	664	668	816	1040	1218	Brunswick
Burlington, NC MSA	628	635	800	1089	1194	Alamance
Charlotte-Concord-Gastonia, NC-SC HMFA	645	737	854	1159	1452	Cabarrus, Gaston, Mecklenburg, Union
Craven County, NC HMFA	672	677	906	1267	1479	Craven
Davidson County, NC HMFA	512	522	641	913	951	Davidson
Durham-Chapel Hill, NC HMFA	632	787	926	1247	1388	Chatham, Durham, Orange
Fayetteville, NC HMFA	653	657	825	1129	1400	Cumberland
Gates County, NC HMFA	527	531	641	934	1119	Gates
Goldsboro, NC MSA	548	551	738	991	1138	Wayne
Greensboro-High Point, NC HMFA	532	629	732	991	1171	Guilford, Randolph
Greenville, NC MSA	572	576	733	1022	1246	Pitt

SCHEDULE B - FY 2016 PROPOSED FAIR MARKET RENTS FOR EXISTING HOUSING PAGE 36

NORTH CAROLINA continued

METROPOLITAN FMR AREAS	0 BR	1 BR	2 BR	3 BR	4 BR	Counties of FMR AREA within STATE
Haywood County, NC HMFA	527	534	715	917	1248	Haywood
Hickory-Lenoir-Morganton, NC MSA	541	547	658	843	1004	Alexander, Burke, Caldwell, Catawba
Hoke County, NC HMFA	492	495	663	966	1099	Hoke
Iredell County, NC HMFA	693	729	844	1070	1474	Iredell
Jacksonville, NC MSA	643	648	783	1141	1367	Onslow
Jones County, NC HMFA	476	479	641	836	1013	Jones
Lincoln County, NC HMFA	603	659	763	1038	1332	Lincoln
Pamlico County, NC HMFA	512	515	668	974	1166	Pamlico
Pender County, NC HMFA	557	586	678	904	1184	Pender
Person County, NC HMFA	452	493	641	795	904	Person
Raleigh, NC MSA	636	808	935	1213	1494	Franklin, Johnston, Wake
Rockingham County, NC HMFA	476	479	641	818	879	Rockingham
Rocky Mount, NC MSA	530	533	663	897	998	Edgecombe, Nash
Rowan County, NC HMFA	521	525	676	875	995	Rowan
*Virginia Beach-Norfolk-Newport News, VA-NC HMFA	934	942	1137	1583	1985	Currituck
Wilmington, NC HMFA	677	682	886	1245	1495	New Hanover
Winston-Salem, NC HMFA	549	562	690	963	1093	Davie, Forsyth, Stokes, Yadkin

NONMETROPOLITAN COUNTIES	0 BR	1 BR	2 BR	3 BR	4 BR	NONMETROPOLITAN COUNTIES	0 BR	1 BR	2 BR	3 BR	4 BR
Alleghany	527	532	641	875	879	Anson	527	554	641	898	1119
Ashe	471	479	641	900	951	Avery	578	584	704	953	1108
Beaufort	496	499	641	916	971	Bertie	476	479	641	832	879
Bladen	476	479	641	795	879	Camden	657	661	809	1042	1412
Carteret	657	661	808	1078	1402	Caswell	476	479	641	934	1119
Cherokee	450	479	641	929	1026	Chowan	538	566	655	938	1031
Clay	527	554	641	820	1009	Cleveland	522	525	641	861	1077
Columbus	462	513	641	814	937	Dare	632	670	897	1262	1483
Duplin	517	520	641	832	1013	Graham	500	504	641	885	1119
Granville	538	542	725	900	1036	Greene	520	524	641	795	879
Halifax	527	542	641	837	979	Harnett	500	518	694	931	1212
Hertford	470	526	662	824	1042	Hyde	641	645	790	980	1243
Jackson	503	506	641	795	973	Lee	563	567	694	861	951
Lenoir	463	491	643	814	990	McDowell	486	522	641	804	952
Macon	515	545	695	872	1030	Martin	476	479	641	813	879
Mitchell	476	479	641	811	1009	Montgomery	517	520	641	879	1025
Moore	633	666	771	1053	1057	Northampton	476	479	641	878	1119
Pasquotank	614	618	827	1145	1398	Perquimans	581	585	783	1082	1232
Polk	540	544	728	903	1075	Richmond	527	530	641	861	956
Robeson	476	479	641	803	951	Rutherford	596	622	725	972	1128
Sampson	395	546	641	881	950	Scotland	484	487	652	844	964
Stanly	402	479	641	876	1119	Surry	556	576	677	966	1182
Swain	527	527	641	795	1038	Transylvania	532	539	648	909	1020
Tyrrell	520	524	641	934	1009	Vance	396	490	642	819	1005
Warren	395	479	641	934	1119	Washington	534	538	658	817	1149

SCHEDULE B - FY 2016 PROPOSED FAIR MARKET RENTS FOR EXISTING HOUSING PAGE 37

NORTH CAROLINA continued

NONMETROPOLITAN COUNTIES	0 BR	1 BR	2 BR	3 BR	4 BR
Watauga	532	667	862	1177	1182
Wilson	530	533	714	971	979
Wilkes	474	554	641	838	1082
Yancey	519	522	664	948	1045

NORTH DAKOTA

METROPOLITAN FMR AREAS	0 BR	1 BR	2 BR	3 BR	4 BR	Counties of FMR AREA within STATE
Bismarck, ND HMFA	563	617	811	1119	1416	Burleigh, Morton
Fargo, ND-MN MSA	483	593	762	1111	1224	Cass
Grand Forks, ND-MN MSA	516	620	823	1107	1340	Grand Forks
Oliver County, ND HMFA	451	493	645	898	1121	Oliver
Sioux County, ND HMFA	451	540	645	853	906	Sioux

NONMETROPOLITAN COUNTIES	0 BR	1 BR	2 BR	3 BR	4 BR
Adams	520	523	645	936	939
Benson	525	557	645	912	925
Bottineau	488	492	645	891	894
Burke	525	557	645	856	884
Dickey	525	557	645	891	939
Dunn	497	501	645	897	939
Emmons	525	557	645	936	939
Golden Valley	497	501	645	897	939
Griggs	525	529	645	940	1126
Kidder	497	500	645	842	939
Logan	561	564	727	1011	1184
McIntosh	479	482	645	800	955
McLean	525	557	645	940	1126
Mountrail	824	829	1110	1377	1616
Pembina	525	546	645	800	1120
Ramsey	482	485	645	919	939
Renville	497	501	645	940	1126
Rolette	497	501	645	940	1050
Sheridan	497	501	645	897	939
Stark	639	643	841	1065	1224
Stutsman	502	506	677	898	1008
Traill	492	495	645	842	939
Ward	786	866	1159	1677	1976
Williams	791	944	1094	1494	1500
Barnes	511	514	688	863	1017
Billings	524	527	679	944	988
Bowman	556	591	684	849	938
Cavalier	525	557	645	845	1013
Divide	497	501	645	897	939
Eddy	525	557	645	936	939
Foster	497	501	645	940	1126
Grant	525	557	645	936	939
Hettinger	525	557	645	936	939
LaMoure	479	482	645	800	884
McHenry	525	557	645	853	1068
McKenzie	542	546	731	957	1064
Mercer	488	492	645	800	1126
Nelson	525	557	645	872	939
Pierce	497	501	645	897	939
Ransom	521	524	702	934	1022
Richland	525	543	645	940	1087
Sargent	500	503	645	888	987
Slope	524	527	679	944	988
Steele	510	513	645	821	939
Towner	487	491	645	897	939
Walsh	525	557	645	830	976
Wells	510	513	645	940	998

OHIO

METROPOLITAN FMR AREAS	0 BR	1 BR	2 BR	3 BR	4 BR	Counties of FMR AREA within STATE
Akron, OH MSA	499	580	777	1005	1065	Portage, Summit
Brown County, OH HMFA	435	486	651	949	968	Brown

SCHEDULE B - FY 2016 PROPOSED FAIR MARKET RENTS FOR EXISTING HOUSING PAGE 38

OHIO continued

METROPOLITAN FMR AREAS	0 BR	1 BR	2 BR	3 BR	4 BR	Counties of FMR AREA within STATE
Canton-Massillon, OH MSA	417	510	676	863	927	Carroll, Stark
Cincinnati, OH-KY-IN..HMFA	502	591	775	1085	1277	Butler, Clermont, Hamilton, Warren
Cleveland-Elyria, OH MSA	493	606	764	1005	1061	Cuyahoga, Geauga, Lake, Lorain, Medina
Columbus, OH HMFA	525	630	821	1052	1228	Delaware, Fairfield, Franklin, Licking, Madison, Morrow, Pickaway
Dayton, OH MSA	500	562	734	989	1166	Greene, Miami, Montgomery
Hocking County, OH HMFA	518	521	651	889	892	Hocking
Huntington-Ashland, WV-KY-OH HMFA	402	519	651	880	1052	Lawrence
Lima, OH MSA	500	503	670	861	918	Allen
Mansfield, OH MSA	479	486	651	900	940	Richland
Perry County, OH HMFA	492	507	651	911	914	Perry
Springfield, OH MSA	489	516	673	872	997	Clark
Toledo, OH MSA	430	525	687	938	1024	Fulton, Lucas, Wood
Union County, OH HMFA	522	611	800	1068	1097	Union
Weirton-Steubenville, WV-OH MSA	454	525	651	857	927	Jefferson
Wheeling, WV-OH MSA	513	540	651	818	892	Belmont
Youngstown-Warren-Boardman, OH HMFA	448	524	652	857	938	Mahoning, Trumbull

NONMETROPOLITAN COUNTIES	0 BR	1 BR	2 BR	3 BR	4 BR	NONMETROPOLITAN COUNTIES	0 BR	1 BR	2 BR	3 BR	4 BR
Adams	462	505	651	808	892	Ashland	448	490	656	933	1021
Ashtabula	468	527	703	973	977	Athens	543	620	718	891	984
Auglaize	476	501	671	921	1107	Champaign	402	512	651	949	1059
Clinton	487	559	705	919	1097	Columbiana	428	508	652	847	972
Coshocton	462	506	651	819	977	Crawford	479	486	651	933	996
Darke	531	534	651	938	964	Defiance	483	486	651	850	1085
Erie	476	570	750	985	1028	Fayette	520	548	733	910	1156
Gallia	462	562	651	881	922	Guernsey	516	517	651	808	980
Hancock	458	527	689	993	1047	Hardin	434	498	666	907	1057
Harrison	402	486	651	889	892	Henry	462	519	651	908	959
Highland	422	518	651	867	892	Holmes	515	518	651	817	892
Huron	407	499	651	883	991	Jackson	462	559	651	889	892
Knox	470	502	659	912	1000	Logan	498	524	702	886	1095
Marion	441	534	715	887	980	Meigs	462	486	651	828	933
Mercer	484	487	652	846	894	Monroe	462	490	651	808	906
Morgan	535	562	651	889	892	Muskingum	415	541	673	922	1011
Noble	535	547	651	808	892	Ottawa	482	527	679	897	1078
Paulding	462	531	651	810	892	Pike	483	486	651	949	1037
Preble	445	499	668	912	916	Putnam	471	515	664	824	910
Ross	460	486	651	808	999	Sandusky	463	535	651	886	1084
Scioto	422	562	651	833	988	Seneca	508	512	651	889	892
Shelby	487	533	686	881	940	Tuscarawas	456	542	726	923	995
Van Wert	462	486	651	808	911	Vinton	462	562	651	949	995
Washington	465	519	651	902	1017	Wayne	462	535	677	840	928
Williams	462	534	651	842	1060	Wyandot	535	562	651	931	1063

SCHEDULE B - FY 2016 PROPOSED FAIR MARKET RENTS FOR EXISTING HOUSING PAGE 39

OKLAHOMA

METROPOLITAN FMR AREAS	0 BR	1 BR	2 BR	3 BR	4 BR	Counties of FMR AREA within STATE
Cotton County, OK HMFA	499	562	651	808	965	Cotton
Fort Smith, AR-OK HMFA	484	486	651	869	1047	Sequoyah
Grady County, OK HMFA	463	511	651	885	981	Grady
Lawton, OK HMFA	544	548	733	1033	1153	Comanche
Le Flore County, OK HMFA	498	501	651	851	1009	Le Flore
Lincoln County, OK HMFA	463	541	651	816	914	Lincoln
Oklahoma City, OK HMFA	535	607	782	1075	1290	Canadian, Cleveland, Logan, McClain, Oklahoma
Okmulgee County, OK HMFA	402	562	651	810	892	Okmulgee
Pawnee County, OK HMFA	434	554	651	809	950	Pawnee
Tulsa, OK HMFA	488	596	774	1049	1140	Creek, Osage, Rogers, Tulsa, Wagoner

NONMETROPOLITAN COUNTIES	0 BR	1 BR	2 BR	3 BR	4 BR	NONMETROPOLITAN COUNTIES	0 BR	1 BR	2 BR	3 BR	4 BR
Adair	458	486	651	877	892	Alfalfa	458	493	651	909	1093
Atoka	458	486	651	808	892	Beaver	458	506	651	808	972
Beckham	606	610	817	1014	1220	Blaine	402	486	651	808	892
Bryan	531	535	684	898	990	Caddo	407	496	651	808	1115
Carter	430	517	676	853	927	Cherokee	427	499	651	866	1090
Choctaw	485	488	651	949	970	Cimarron	458	506	651	808	972
Coal	458	486	651	949	1100	Craig	535	550	651	904	940
Custer	491	494	651	949	1074	Delaware	498	502	651	916	1001
Dewey	471	501	670	831	1000	Ellis	507	561	721	895	1002
Garfield	462	551	685	954	1196	Garvin	516	554	651	841	935
Grant	458	562	651	808	972	Greer	497	528	707	877	1056
Harmon	458	506	651	808	972	Harper	458	518	651	867	972
Haskell	458	486	651	877	892	Hughes	458	543	651	818	972
Jackson	492	501	670	957	1170	Jefferson	458	486	651	808	1014
Johnston	458	486	651	845	892	Kay	468	498	666	889	998
Kingfisher	461	509	656	914	1057	Kiowa	458	486	651	877	1002
Latimer	458	543	651	895	992	Love	458	562	651	949	990
McCurtain	430	486	651	836	1134	McIntosh	410	486	651	846	1035
Major	458	486	651	867	1137	Marshall	419	507	679	847	1004
Mayes	402	488	652	871	974	Murray	460	489	655	862	898
Muskogee	411	498	667	913	916	Noble	458	562	651	949	1066
Nowata	489	540	696	864	1039	Okfuskee	458	524	651	892	932
Ottawa	459	500	669	897	1079	Payne	468	550	713	1039	1245
Pittsburg	435	527	705	880	1231	Pontotoc	472	562	674	920	1061
Pottawatomie	510	513	687	874	974	Pushmataha	465	486	651	949	1043
Roger Mills	458	506	651	889	892	Seminole	402	517	651	866	957
Stephens	441	490	656	894	1035	Texas	474	582	674	859	1177
Tillman	458	486	651	873	972	Washington	480	569	683	911	1173
Washita	402	562	651	949	1137	Woods	458	562	651	808	972
Woodward	511	581	673	892	1175						

SCHEDULE B - FY 2016 PROPOSED FAIR MARKET RENTS FOR EXISTING HOUSING PAGE 40

OREGON

METROPOLITAN FMR AREAS	0 BR	1 BR	2 BR	3 BR	4 BR	Counties of FMR AREA within STATE
Albany, OR MSA	510	613	820	1195	1402	Linn
Bend-Redmond, OR MSA	658	693	817	1169	1426	Deschutes
Corvallis, OR MSA	525	654	829	1208	1447	Benton
Eugene-Springfield, OR MSA	554	672	899	1293	1546	Lane
Grants Pass, OR MSA	542	666	869	1266	1396	Josephine
Medford, OR MSA	607	633	848	1236	1348	Jackson
Portland-Vancouver-Hillsboro, OR-WA MSA	744	857	1014	1474	1770	Clackamas, Columbia, Multnomah, Washington, Yamhill
Salem, OR MSA	529	589	788	1148	1376	Marion, Polk

NONMETROPOLITAN COUNTIES	0 BR	1 BR	2 BR	3 BR	4 BR	NONMETROPOLITAN COUNTIES	0 BR	1 BR	2 BR	3 BR	4 BR
Baker	485	488	653	857	1068	Clatsop	614	624	804	1172	1404
Coos	451	602	731	1065	1244	Crook	442	508	680	991	1132
Curry	545	627	839	1184	1307	Douglas	452	529	708	1032	1236
Gilliam	424	494	652	882	1094	Grant	423	562	651	949	1137
Harney	423	520	651	832	981	Hood River	565	726	870	1268	1479
Jefferson	495	562	651	949	1137	Klamath	462	533	713	1020	1133
Lake	423	486	651	808	1137	Lincoln	524	629	807	1162	1259
Malheur	465	486	651	854	983	Morrow	509	512	651	949	1036
Sherman	488	649	751	932	1029	Tillamook	467	578	757	1062	1221
Umatilla	453	566	735	969	1135	Union	411	498	666	936	1102
Wallowa	423	559	651	949	1060	Wasco	513	573	767	1061	1269
Wheeler	423	493	651	816	1092						

PENNSYLVANIA

METROPOLITAN FMR AREAS	0 BR	1 BR	2 BR	3 BR	4 BR	Counties of FMR AREA within STATE
Allentown-Bethlehem-Easton, PA HMFA	609	772	987	1257	1365	Carbon, Lehigh, Northampton
Altoona, PA MSA	543	645	802	1008	1169	Blair
Armstrong County, PA HMFA	408	484	643	798	881	Armstrong
Chambersburg-Waynesboro, PA MSA	533	647	865	1123	1289	Franklin
Columbia County, PA HMFA	534	600	734	951	1273	Columbia
East Stroudsburg, PA MSA	695	750	936	1300	1377	Monroe
Erie, PA MSA	546	577	733	932	1044	Erie
Gettysburg, PA MSA	676	683	881	1187	1281	Adams
Harrisburg-Carlisle, PA MSA	588	695	875	1118	1199	Cumberland, Dauphin, Perry
Johnstown, PA MSA	451	523	630	814	864	Cambria
Lancaster, PA MSA	591	699	887	1137	1216	Lancaster
Lebanon, PA MSA	576	613	774	1004	1194	Lebanon
Montour County, PA HMFA	604	701	830	1030	1138	Montour
*Philadelphia-Camden-Wilmington, PA-NJ-DE-MD MSA	820	992	1196	1484	1639	Bucks, Chester, Delaware, Montgomery, Philadelphia
Pike County, PA HMFA	856	862	1154	1552	1803	Pike
Pittsburgh, PA HMFA	549	649	817	1014	1120	Allegheny, Beaver, Butler, Fayette, Washington, Westmoreland
Reading, PA MSA	543	663	881	1093	1208	Berks
Scranton--Wilkes-Barre, PA MSA	432	568	698	897	1047	Lackawanna, Luzerne, Wyoming
Sharon, PA HMFA	478	515	678	841	929	Mercer
State College, PA MSA	698	712	875	1178	1199	Centre

SCHEDULE B - FY 2016 PROPOSED FAIR MARKET RENTS FOR EXISTING HOUSING PAGE 41

PENNSYLVANIA continued

METROPOLITAN FMR AREAS	0 BR	1 BR	2 BR	3 BR	4 BR	Counties of FMR AREA within STATE
Williamsport, PA MSA	601	603	745	997	1021	Lycoming
York-Hanover, PA MSA	554	676	883	1143	1235	York

NONMETROPOLITAN COUNTIES	0 BR	1 BR	2 BR	3 BR	4 BR	NONMETROPOLITAN COUNTIES	0 BR	1 BR	2 BR	3 BR	4 BR
Bedford	518	534	630	782	874	Bradford	476	480	642	882	885
Cameron	482	544	630	918	1100	Clarion	482	536	630	782	864
Clearfield	427	510	630	844	871	Clinton	531	534	715	887	1085
Crawford	473	506	641	795	927	Elk	477	480	630	782	864
Forest	467	471	630	782	1100	Fulton	482	544	630	795	912
Greene	518	543	630	786	867	Huntingdon	513	516	630	851	864
Indiana	543	571	661	859	906	Jefferson	468	510	630	784	864
Juniata	445	499	630	795	864	Lawrence	412	514	668	871	916
McKean	393	503	638	792	875	Mifflin	489	492	630	807	864
Northumberland	481	518	663	839	909	Potter	482	534	630	782	957
Schuylkill	411	506	630	857	866	Snyder	515	551	674	836	924
Somerset	455	492	630	817	866	Sullivan	469	503	630	918	1031
Susquehanna	543	547	668	875	972	Tioga	404	566	655	875	1057
Union	542	546	731	1036	1099	Venango	490	516	630	782	864
Warren	518	528	630	820	936	Wayne	426	597	691	1007	1007

RHODE ISLAND

METROPOLITAN FMR AREAS	0 BR	1 BR	2 BR	3 BR	4 BR	Components of FMR AREA within STATE
Newport-Middleton-Portsmouth, RI HMFA	743	951	1205	1756	2104	Newport County towns of Middletown town, Newport city, Portsmouth town
Providence-Fall River, RI-MA HMFA	647	791	960	1191	1434	Bristol County towns of Barrington town, Bristol town, Warren town Kent County towns of Coventry town, East Greenwich town, Warwick city, West Greenwich town, West Warwick town Newport County towns of Jamestown town, Little Compton town, Tiverton town Providence County towns of Burrillville town, Central Falls city, Cranston city, Cumberland town, East Providence city, Foster town, Glocester town, Johnston town, Lincoln town, North Providence town, North Smithfield town, Pawtucket city, Providence city, Scituate town, Smithfield town, Woonsocket city Washington County towns of Charlestown town, Exeter town, Narragansett town, North Kingstown town, Richmond town, South Kingstown town
Westerly-Hopkinton-New Shoreham, RI HMFA	651	789	1056	1402	1844	Washington County towns of Hopkinton town, New Shoreham town, Westerly town

SCHEDULE B - FY 2016 PROPOSED FAIR MARKET RENTS FOR EXISTING HOUSING PAGE 42

SOUTH CAROLINA

METROPOLITAN FMR AREAS	0 BR	1 BR	2 BR	3 BR	4 BR	Counties of FMR AREA within STATE
Anderson, SC HMFA	522	525	655	883	947	Anderson
Augusta-Richmond County, GA-SC HMFA	527	605	726	985	1253	Aiken, Edgefield
Beaufort County, SC HMFA	771	810	938	1230	1638	Beaufort
Charleston-North Charleston, SC MSA	726	763	916	1199	1548	Berkeley, Charleston, Dorchester
Charlotte-Concord-Gastonia, NC-SC HMFA	645	737	854	1159	1452	York
Chester County, SC HMFA	463	466	624	815	886	Chester
Columbia, SC HMFA	534	681	796	1050	1289	Calhoun, Fairfield, Lexington, Richland, Saluda
Darlington County, SC HMFA	498	539	624	853	912	Darlington
Florence, SC HMFA	481	484	643	811	881	Florence
Greenville-Mauldin-Easley, SC HMFA	495	606	721	953	1183	Greenville, Pickens
Jasper County, SC HMFA	600	604	749	976	1027	Jasper
Kershaw County, SC HMFA	505	508	635	808	1109	Kershaw
Lancaster County, SC HMFA	385	489	624	845	855	Lancaster
Laurens County, SC HMFA	471	474	635	793	870	Laurens
Myrtle Beach-North Myrtle Beach-Conway, SC HMFA	647	657	788	1032	1176	Horry
Spartanburg, SC HMFA	415	553	669	895	1001	Spartanburg
Sumter, SC MSA	635	639	811	1033	1136	Sumter
Union County, SC HMFA	408	466	624	803	855	Union

NONMETROPOLITAN COUNTIES	0 BR	1 BR	2 BR	3 BR	4 BR	NONMETROPOLITAN COUNTIES	0 BR	1 BR	2 BR	3 BR	4 BR
Abbeville	419	466	624	909	1089	Allendale	385	466	624	894	1024
Bamberg	452	504	674	836	976	Barnwell	425	473	633	835	868
Cherokee	507	510	624	847	872	Chesterfield	419	539	624	791	904
Clarendon	419	466	624	808	896	Colleton	461	563	688	854	943
Dillon	419	466	624	852	855	Georgetown	540	544	728	982	1099
Greenwood	425	474	634	857	869	Hampton	419	466	624	806	855
Lee	419	539	624	905	1058	McCormick	419	466	624	774	855
Marion	513	539	624	874	911	Marlboro	426	474	635	791	870
Newberry	450	501	671	833	1097	Oconee	419	510	624	783	1089
Orangeburg	528	532	712	908	1091	Williamsburg	385	539	624	898	950

SOUTH DAKOTA

METROPOLITAN FMR AREAS	0 BR	1 BR	2 BR	3 BR	4 BR	Counties of FMR AREA within STATE
Custer County, SD HMFA	486	563	753	1013	1128	Custer
Meade County, SD HMFA	452	577	700	1002	1006	Meade
Rapid City, SD HMFA	535	610	816	1116	1361	Pennington
Sioux City, IA-NE-SD HMFA	433	524	702	875	1002	Union
Sioux Falls, SD MSA	459	586	736	1003	1204	Lincoln, McCook, Minnehaha, Turner

NONMETROPOLITAN COUNTIES	0 BR	1 BR	2 BR	3 BR	4 BR	NONMETROPOLITAN COUNTIES	0 BR	1 BR	2 BR	3 BR	4 BR
Aurora	452	501	671	833	920	Beadle	429	476	637	870	873
Bennett	429	550	637	928	931	Bon Homme	429	550	637	928	1112
Brookings	459	544	715	976	980	Brown	411	498	666	946	976
Brule	429	477	637	870	873	Buffalo	510	654	757	939	1038

SCHEDULE B - FY 2016 PROPOSED FAIR MARKET RENTS FOR EXISTING HOUSING PAGE 43

SOUTH DAKOTA continued

NONMETROPOLITAN COUNTIES	0 BR	1 BR	2 BR	3 BR	4 BR
Butte	429	502	637	870	873
Charles Mix	429	550	637	790	873
Clay	478	548	710	1002	1240
Corson	429	477	637	862	873
Day	429	476	637	851	911
Dewey	559	581	681	930	933
Edmunds	446	495	662	900	1021
Faulk	429	476	637	866	873
Gregory	429	550	637	855	940
Hamlin	486	489	637	870	873
Hanson	429	477	637	866	873
Hughes	450	514	668	974	1166
Hyde	429	477	637	866	873
Jerauld	429	528	637	870	873
Kingsbury	399	476	637	928	1093
Lawrence	463	522	660	901	905
McPherson	431	480	640	870	877
Mellette	429	477	637	928	1112
Moody	429	535	637	870	873
Potter	429	477	637	790	873
Sanborn	429	550	637	928	1112
Spink	523	525	637	870	873
Sully	429	477	637	870	873
Tripp	429	476	637	790	873
Yankton	441	476	637	895	1112

NONMETROPOLITAN COUNTIES	0 BR	1 BR	2 BR	3 BR	4 BR
Campbell	429	477	637	866	1112
Clark	429	477	637	870	873
Codington	422	511	684	912	1194
Davison	427	517	692	874	1089
Deuel	429	550	637	870	873
Douglas	543	602	806	1000	1105
Fall River	531	589	788	993	1080
Grant	429	522	637	904	1112
Haakon	482	536	715	887	980
Hand	429	515	637	866	873
Harding	429	477	637	866	873
Hutchinson	431	478	640	794	877
Jackson	429	499	637	870	873
Jones	429	477	637	866	873
Lake	429	550	637	928	1112
Lyman	429	535	637	797	873
Marshall	444	492	659	887	903
Miner	429	484	637	921	925
Perkins	458	508	680	844	932
Roberts	429	535	637	866	873
Shannon	429	477	637	834	873
Stanley	464	515	689	941	944
Todd	429	550	637	790	879
Walworth	429	550	637	866	873
Ziebach	429	477	637	897	1028

TENNESSEE

METROPOLITAN FMR AREAS	0 BR	1 BR	2 BR	3 BR	4 BR	Counties of FMR AREA within STATE
Campbell County, TN HMFA	373	433	579	741	1011	Campbell
Chattanooga, TN-GA MSA	509	608	758	1007	1233	Hamilton, Marion, Sequatchie
Clarksville, TN-KY MSA	508	598	788	1065	1175	Montgomery
Cleveland, TN MSA	466	565	756	955	1219	Bradley, Polk
Crockett County, TN HMFA	501	519	663	826	1122	Crockett
Hickman County, TN HMFA	476	492	658	899	902	Hickman
Jackson, TN HMFA	450	605	729	1002	1134	Chester, Madison
Johnson City, TN MSA	447	510	650	846	1066	Carter, Unicoi, Washington
Kingsport-Bristol-Bristol, TN-VA MSA	426	493	652	849	935	Hawkins, Sullivan
Knoxville, TN HMFA	492	656	798	1040	1338	Anderson, Blount, Knox, Loudon, Union
Macon County, TN HMFA	419	433	579	718	898	Macon
Maury County, TN HMFA	547	573	684	983	1115	Maury
Memphis, TN-MS-AR HMFA	595	692	817	1114	1293	Fayette, Shelby, Tipton
Morgan County, TN HMFA	400	531	614	816	962	Morgan
Morristown, TN HMFA	373	433	579	844	874	Grainger

SCHEDULE B - FY 2016 PROPOSED FAIR MARKET RENTS FOR EXISTING HOUSING PAGE 44

TENNESSEE continued

METROPOLITAN FMR AREAS	0 BR	1 BR	2 BR	3 BR	4 BR	Counties of FMR AREA within STATE
Morristown, TN MSA	448	464	621	890	912	Hamblen, Jefferson
Nashville-Davidson--Murfreesboro--Franklin, TN HMF	653	747	914	1213	1416	Cannon, Cheatham, Davidson, Dickson, Robertson, Rutherford, Sumner, Trousdale, Williamson, Wilson
Roane County, TN HMFA	442	513	687	897	975	Roane
Smith County, TN HMFA	438	452	605	762	842	Smith

NONMETROPOLITAN COUNTIES	0 BR	1 BR	2 BR	3 BR	4 BR	NONMETROPOLITAN COUNTIES	0 BR	1 BR	2 BR	3 BR	4 BR
Bedford	469	557	645	940	1097	Benton	421	433	579	844	857
Bledsoe	421	492	579	718	842	Carroll	421	433	579	718	899
Claiborne	421	488	579	718	1011	Clay	421	433	579	718	794
Cocke	421	433	579	839	842	Coffee	402	487	652	872	894
Cumberland	461	474	634	787	869	Decatur	476	500	579	789	942
DeKalb	421	433	579	791	794	Dyer	442	445	596	814	817
Fentress	421	433	579	718	816	Franklin	421	433	579	798	870
Gibson	453	456	579	797	863	Giles	428	506	588	790	855
Greene	437	440	579	748	832	Grundy	421	467	579	770	842
Hancock	421	444	579	764	1003	Hardeman	421	451	579	739	834
Hardin	453	465	623	773	1088	Haywood	392	479	635	806	923
Henderson	450	462	618	767	847	Henry	428	440	589	731	856
Houston	357	433	579	743	870	Humphreys	447	469	614	762	842
Jackson	421	480	579	839	842	Johnson	421	500	579	718	1011
Lake	421	484	579	839	842	Lauderdale	421	440	579	784	933
Lawrence	357	473	579	724	861	Lewis	421	500	579	844	1011
Lincoln	426	448	586	796	803	McMinn	369	497	599	775	901
McNairy	421	433	579	739	794	Marshall	496	509	682	846	935
Meigs	421	481	579	839	842	Monroe	444	447	598	847	888
Moore	421	449	579	774	842	Obion	421	433	579	766	901
Overton	426	438	586	727	952	Perry	362	487	579	718	842
Pickett	421	449	579	760	842	Putnam	516	520	650	888	891
Rhea	485	511	591	755	859	Scott	421	433	579	844	1011
Sevier	549	556	687	922	942	Stewart	421	485	579	844	884
Van Buren	435	447	598	742	820	Warren	421	433	579	806	1011
Wayne	421	500	579	718	942	Weakley	357	450	579	773	829
White	421	433	579	765	794						

TEXAS

METROPOLITAN FMR AREAS	0 BR	1 BR	2 BR	3 BR	4 BR	Counties of FMR AREA within STATE
Abilene, TX MSA	518	583	777	964	1318	Callahan, Jones, Taylor
Amarillo, TX HMFA	500	615	804	1063	1265	Armstrong, Carson, Potter, Randall
Aransas County, TX HMFA	572	659	828	1207	1446	Aransas
Atascosa County, TX HMFA	464	544	719	932	1116	Atascosa
Austin County, TX HMFA	582	607	807	1057	1404	Austin

SCHEDULE B - FY 2016 PROPOSED FAIR MARKET RENTS FOR EXISTING HOUSING PAGE 45

TEXAS continued

METROPOLITAN FMR AREAS	0 BR	1 BR	2 BR	3 BR	4 BR	Counties of FMR AREA within STATE
Austin-Round Rock, TX MSA	731	892	1113	1505	1824	Bastrop, Caldwell, Hays, Travis, Williamson
Beaumont-Port Arthur, TX HMFA	500	653	795	1023	1090	Hardin, Jefferson, Orange
Brazoria County, TX HMFA	695	699	860	1136	1501	Brazoria
Brownsville-Harlingen, TX MSA	476	517	670	867	1012	Cameron
College Station-Bryan, TX MSA	647	695	852	1236	1432	Brazos, Burleson, Robertson
Corpus Christi, TX HMFA	729	784	985	1297	1470	Nueces, San Patricio
Dallas, TX HMFA	650	787	974	1314	1655	Collin, Dallas, Denton, Ellis, Hunt, Kaufman, Rockwall
El Paso, TX HMFA	546	661	807	1150	1369	El Paso
Falls County, TX HMFA	463	486	651	817	1081	Falls
Fort Worth-Arlington, TX HMFA	616	709	902	1234	1543	Johnson, Parker, Tarrant
Hood County, TX HMFA	603	607	813	1084	1419	Hood
Houston-The Woodlands-Sugar Land, TX HMFA	677	766	939	1279	1634	Chambers, Fort Bend, Galveston, Harris, Liberty, Montgomery, Waller
Hudspeth County, TX HMFA	464	611	716	888	1242	Hudspeth
Kendall County, TX HMFA	654	845	1013	1476	1769	Kendall
Killeen-Temple, TX HMFA	574	578	774	1104	1351	Bell, Coryell
Lampasas County, TX HMFA	535	550	651	949	1056	Lampasas
Laredo, TX MSA	533	578	747	984	1096	Webb
Longview, TX HMFA	634	644	772	976	1264	Gregg, Upshur
Lubbock, TX HMFA	537	619	789	1150	1378	Crosby, Lubbock
Lynn County, TX HMFA	444	528	651	889	892	Lynn
Martin County, TX HMFA	402	519	651	874	892	Martin
McAllen-Edinburg-Mission, TX MSA	522	555	721	895	1087	Hidalgo
Medina County, TX HMFA	420	486	651	944	1050	Medina
Midland, TX HMFA	765	970	1241	1540	1701	Midland
Newton County, TX HMFA	426	562	651	889	892	Newton
Odessa, TX MSA	637	834	1012	1256	1532	Ector
Oldham County, TX HMFA	448	542	726	942	1268	Oldham
Rusk County, TX HMFA	455	489	654	866	896	Rusk
San Angelo, TX MSA	539	673	870	1230	1358	Irion, Tom Green
San Antonio-New Braunfels, TX HMFA	590	730	918	1208	1413	Bandera, Bexar, Comal, Guadalupe, Wilson
Sherman-Denison, TX MSA	497	617	778	1059	1196	Grayson
Somervell County, TX HMFA	440	526	651	949	1117	Somervell
Texarkana, TX-Texarkana, AR HMFA	441	556	703	882	964	Bowie
Tyler, TX MSA	591	683	836	1098	1146	Smith
Victoria, TX MSA	673	677	846	1127	1283	Goliad, Victoria
Waco, TX HMFA	484	577	770	1043	1233	McLennan
Wichita Falls, TX MSA	469	601	760	1060	1327	Archer, Clay, Wichita
Wise County, TX HMFA	550	666	892	1107	1223	Wise

NONMETROPOLITAN COUNTIES	0 BR	1 BR	2 BR	3 BR	4 BR	NONMETROPOLITAN COUNTIES	0 BR	1 BR	2 BR	3 BR	4 BR
Anderson	521	589	692	886	1208	Andrews	605	619	804	1157	1275
Angelina	546	620	717	942	1027	Bailey	490	516	651	856	1033
Baylor	483	486	651	856	1033	Bee	570	573	725	1057	1132
Blanco	587	588	780	1091	1362	Borden	514	541	683	898	1083
Bosque	490	543	651	875	941	Brewster	554	558	747	927	1185
Briscoe	490	516	651	821	1033	Brooks	490	516	651	833	1033
Brown	430	544	681	905	1181	Burnet	550	597	746	1087	1302

SCHEDULE B - FY 2016 PROPOSED FAIR MARKET RENTS FOR EXISTING HOUSING PAGE 46

TEXAS continued

NONMETROPOLITAN COUNTIES	0 BR	1 BR	2 BR	3 BR	4 BR
Calhoun	583	620	774	982	1221
Cass	414	486	651	889	1137
Cherokee	507	510	683	931	992
Cochran	483	486	651	949	1033
Coleman	483	486	651	949	1137
Colorado	472	498	651	949	1137
Concho	801	843	1064	1399	1688
Cottle	490	516	651	856	1033
Crockett	490	562	651	856	1033
Dallam	490	562	651	949	1033
Deaf Smith	520	544	691	937	1055
DeWitt	527	530	651	922	1033
Dimmit	490	562	651	877	892
Duval	556	585	738	916	1171
Edwards	490	516	651	856	1033
Fannin	432	523	700	979	1123
Fisher	483	486	651	850	1033
Foard	490	516	651	949	1033
Freestone	483	486	651	859	1033
Gaines	490	516	651	949	1033
Gillespie	690	707	917	1179	1455
Gonzales	483	486	651	926	1033
Grimes	483	486	651	904	1033
Hall	452	528	651	949	1033
Hansford	495	521	657	828	920
Harrison	506	552	672	889	1029
Haskell	490	516	651	927	1033
Henderson	611	675	839	1130	1307
Hockley	581	585	783	972	1073
Houston	403	489	654	889	906
Hutchinson	513	517	692	859	1208
Jackson	534	538	720	969	1257
Jeff Davis	740	779	983	1292	1559
Jim Wells	587	590	768	953	1053
Kenedy	589	620	782	1028	1240
Kerr	577	676	807	1075	1280
King	699	736	929	1221	1474
Kleberg	561	565	744	1084	1299
Lamar	539	563	656	940	1145
La Salle	531	559	705	1027	1118
Lee	490	562	651	889	892
Limestone	471	570	763	947	1210

NONMETROPOLITAN COUNTIES	0 BR	1 BR	2 BR	3 BR	4 BR
Camp	478	562	651	922	976
Castro	556	586	739	917	1172
Childress	502	576	667	972	1058
Coke	483	486	651	808	1033
Collingsworth	535	563	710	933	1126
Comanche	483	486	651	871	892
Cooke	603	607	813	1012	1114
Crane	490	516	651	808	1033
Culberson	490	516	651	856	1033
Dawson	490	503	651	949	1033
Delta	490	516	651	948	1137
Dickens	483	486	651	856	1033
Donley	483	486	651	816	1033
Eastland	435	486	651	808	935
Erath	607	610	747	949	1054
Fayette	499	503	673	981	1068
Floyd	490	562	651	949	1137
Franklin	483	486	651	888	1137
Frio	490	493	660	926	1047
Garza	490	516	651	949	1033
Glasscock	514	541	683	898	1083
Gray	490	562	651	845	1033
Hale	445	514	651	908	1033
Hamilton	513	516	691	924	1151
Hardeman	546	575	725	900	1150
Hartley	560	590	744	978	1180
Hemphill	490	562	651	856	1033
Hill	526	530	709	900	1047
Hopkins	535	538	720	895	1168
Howard	559	596	743	956	1072
Jack	630	723	837	1039	1222
Jasper	565	568	761	944	1043
Jim Hogg	490	527	651	855	1033
Karnes	514	518	651	949	1099
Kent	514	541	683	898	1083
Kimble	500	526	664	824	910
Kinney	483	486	651	856	1033
Knox	490	516	651	889	1033
Lamb	490	518	651	867	1020
Lavaca	402	489	651	929	1137
Leon	483	486	651	842	1052
Lipscomb	501	575	665	825	912

SCHEDULE B - FY 2016 PROPOSED FAIR MARKET RENTS FOR EXISTING HOUSING PAGE 47

TEXAS continued

NONMETROPOLITAN COUNTIES	0 BR	1 BR	2 BR	3 BR	4 BR	NONMETROPOLITAN COUNTIES	0 BR	1 BR	2 BR	3 BR	4 BR
Live Oak	513	516	651	928	1033	Llano	556	611	738	1076	1171
Loving	514	541	683	898	1083	McCulloch	490	516	651	856	1033
McMullen	514	541	683	898	1083	Madison	483	486	651	949	1033
Marion	490	516	651	808	1033	Mason	745	784	990	1301	1570
Matagorda	524	530	696	864	1203	Maverick	505	562	651	821	1033
Menard	490	516	651	893	1033	Milam	498	507	661	912	1048
Mills	490	523	651	866	1033	Mitchell	483	486	651	808	1033
Montague	526	603	698	953	957	Moore	504	508	669	830	1138
Morris	402	486	651	949	1137	Motley	490	516	651	856	1033
Nacogdoches	617	620	764	948	1250	Navarro	556	564	739	917	1046
Nolan	490	562	651	837	1033	Ochiltree	553	624	734	932	1281
Palo Pinto	563	567	759	1024	1204	Panola	484	487	652	813	1135
Parmer	490	562	651	851	1033	Pecos	454	562	692	859	1098
Polk	442	518	693	951	1210	Presidio	490	562	651	949	1033
Rains	483	486	651	949	1033	Reagan	490	516	651	930	1033
Real	490	516	651	949	1033	Red River	483	486	651	893	1078
Reeves	490	516	651	831	1033	Refugio	490	533	651	863	1033
Roberts	514	541	683	898	1083	Runnels	490	493	651	883	1033
Sabine	495	521	658	817	1044	San Augustine	483	486	651	848	1111
San Jacinto	483	486	651	891	892	San Saba	490	516	651	949	1033
Schleicher	483	486	651	949	1033	Scurry	584	588	787	1038	1374
Shackelford	490	562	651	949	1137	Shelby	483	486	651	820	985
Sherman	490	516	651	857	1033	Starr	490	507	651	839	998
Stephens	483	486	651	863	892	Sterling	519	596	690	856	1094
Stonewall	490	516	651	856	1033	Sutton	490	555	651	823	1033
Swisher	490	516	651	865	1033	Terrell	490	516	651	915	1033
Terry	484	487	652	929	1034	Throckmorton	514	541	683	898	1083
Titus	483	486	651	830	1137	Trinity	486	489	654	894	1142
Tyler	490	545	651	949	953	Upton	490	516	651	949	1033
Uvalde	535	562	651	895	1033	Val Verde	501	518	666	971	1056
Van Zandt	539	543	727	960	1027	Walker	610	709	820	1105	1124
Ward	490	562	651	814	1033	Washington	576	623	721	922	1227
Wharton	489	571	741	920	1016	Wheeler	522	525	699	867	1109
Wilbarger	490	492	651	949	1137	Willacy	483	486	651	949	1137
Winkler	483	486	651	808	1033	Wood	521	524	702	938	1226
Yoakum	490	516	651	808	1033	Young	506	509	682	846	935
Zapata	490	516	651	949	1033	Zavala	437	548	651	808	892

UTAH

METROPOLITAN FMR AREAS	0 BR	1 BR	2 BR	3 BR	4 BR	Counties of FMR AREA within STATE
Box Elder County, UT HMFA	416	514	653	922	1140	Box Elder

SCHEDULE B - FY 2016 PROPOSED FAIR MARKET RENTS FOR EXISTING HOUSING PAGE 48

UTAH continued

METROPOLITAN FMR AREAS	0 BR	1 BR	2 BR	3 BR	4 BR	Counties of FMR AREA within STATE
Logan, UT-ID MSA	474	520	651	949	1084	Cache
Ogden-Clearfield, UT HMFA	503	637	816	1151	1360	Davis, Morgan, Weber
Provo-Orem, UT MSA	549	660	779	1135	1360	Juab, Utah
Salt Lake City, UT HMFA	596	748	927	1335	1557	Salt Lake
St. George, UT MSA	547	649	785	1133	1371	Washington
Tooele County, UT HMFA	566	635	760	1064	1327	Tooele

NONMETROPOLITAN COUNTIES	0 BR	1 BR	2 BR	3 BR	4 BR	NONMETROPOLITAN COUNTIES	0 BR	1 BR	2 BR	3 BR	4 BR
Beaver	429	558	653	892	895	Carbon	483	496	664	849	974
Daggett	548	642	835	1176	1326	Duchesne	504	652	768	1083	1269
Emery	427	562	651	834	919	Garfield	427	486	651	808	1034
Grand	475	555	723	1054	1148	Iron	462	536	651	949	1137
Kane	515	586	785	1036	1246	Millard	427	528	651	941	1131
Piute	549	643	837	1039	1329	Rich	574	672	875	1256	1389
San Juan	427	500	651	949	1034	Sanpete	515	518	694	861	951
Sevier	430	489	655	819	1042	Summit	691	880	1018	1484	1777
Uintah	564	642	860	1071	1216	Wasatch	601	751	916	1251	1256
Wayne	427	562	651	949	1119						

VERMONT

METROPOLITAN FMR AREAS	0 BR	1 BR	2 BR	3 BR	4 BR	Components of FMR AREA within STATE
Burlington-South Burlington, VT MSA	742	886	1158	1534	1697	Chittenden County towns of Bolton town, Buels gore, Burlington city, Charlotte town, Colchester town, Essex town, Hinesburg town, Huntington town, Jericho town, Milton town, Richmond town, St. George town, Shelburne town, South Burlington city, Underhill town, Westford town, Williston town, Winooski city Franklin County towns of Bakersfield town, Berkshire town, Enosburg town, Fairfax town, Fairfield town, Fletcher town, Franklin town, Georgia town, Highgate town, Montgomery town, Richford town, St. Albans city, St. Albans town, Sheldon town, Swanton town Grand Isle County towns of Alburgh town, Grand Isle town, Isle La Motte town, North Hero town, South Hero town

NONMETROPOLITAN COUNTIES	0 BR	1 BR	2 BR	3 BR	4 BR	Towns within nonmetropolitan counties
Addison County, VT	722	808	935	1282	1555	Addison town, Bridport town, Bristol town, Cornwall town, Ferrisburgh town, Goshen town, Granville town, Hancock town, Leicester town, Lincoln town, Middlebury town, Monkton town, New Haven town, Orwell town, Panton town, Ripton town, Salisbury town, Shoreham town, Starksboro town, Vergennes city, Waltham town, Weybridge town, Whiting town
Bennington County, VT	743	797	962	1333	1393	Arlington town, Bennington town, Dorset town, Glastenbury town, Landgrove town, Manchester town, Peru town,

SCHEDULE B - FY 2016 PROPOSED FAIR MARKET RENTS FOR EXISTING HOUSING PAGE 49

VERMONT continued

NONMETROPOLITAN COUNTIES	0 BR	1 BR	2 BR	3 BR	4 BR	Towns within nonmetropolitan counties
						Pownal town, Readsboro town, Rupert town, Sandgate town, Searsburg town, Shaftsbury town, Stamford town, Sunderland town, Winhall town, Woodford town
Caledonia County, VT	654	659	837	1039	1195	Barnet town, Burke town, Danville town, Groton town, Hardwick town, Kirby town, Lyndon town, Newark town, Peacham town, Ryegate town, St. Johnsbury town, Sheffield town, Stannard town, Sutton town, Walden town, Waterford town, Wheelock town
Essex County, VT	580	605	751	932	1029	Averill town, Avery's gore, Bloomfield town, Brighton town, Brunswick town, Canaan town, Concord town, East Haven town, Ferdinand town, Granby town, Guildhall town, Lemington town, Lewis town, Lunenburg town, Maidstone town, Norton town, Victory town, Warner's grant, Warren's gore
Lamoille County, VT	582	760	944	1295	1600	Belvidere town, Cambridge town, Eden town, Elmore town, Hyde Park town, Johnson town, Morristown town, Stowe town, Waterville town, Wolcott town
Orange County, VT	676	719	909	1162	1426	Bradford town, Braintree town, Brookfield town, Chelsea town, Corinth town, Fairlee town, Newbury town, Orange town, Randolph town, Strafford town, Thetford town, Topsham town, Tunbridge town, Vershire town, Washington town, West Fairlee town, Williamstown town
Orleans County, VT	585	616	758	941	1039	Albany town, Barton town, Brownington town, Charleston town, Coventry town, Craftsbury town, Derby town, Glover town, Greensboro town, Holland town, Irasburg town, Jay town, Lowell town, Morgan town, Newport city, Newport town, Troy town, Westfield town, Westmore town
Rutland County, VT	660	701	885	1098	1298	Benson town, Brandon town, Castleton town, Chittenden town, Clarendon town, Danby town, Fair Haven town, Hubbardton town, Ira town, Killington town, Mendon town, Middletown Springs town, Mount Holly town, Mount Tabor town, Pawlet town, Pittsfield town, Pittsford town, Poultney town, Proctor town, Rutland city, Rutland town, Shrewsbury town, Sudbury town, Tinmouth town, Wallingford town, Wells town, West Haven town, West Rutland town
Washington County, VT	723	728	974	1209	1461	Barre city, Barre town, Berlin town, Cabot town, Calais town, Duxbury town, East Montpelier town, Fayston town, Marshfield town, Middlesex town, Montpelier city, Moretown town, Northfield town, Plainfield town, Roxbury town, Waitsfield town, Warren town, Waterbury town, Woodbury town, Worcester town
Windham County, VT	766	801	1007	1312	1550	Athens town, Brattleboro town, Brookline town, Dover town, Dummerston town, Grafton town, Guilford town, Halifax town, Jamaica town, Londonderry town, Marlboro town, Newfane town, Putney town, Rockingham town, Somerset town, Stratton town, Townshend town, Vernon town, Wardsboro town, Westminster town, Whitingham town, Wilmington town, Windham town
Windsor County, VT	803	838	1029	1404	1652	Andover town, Baltimore town, Barnard town, Bethel town, Bridgewater town, Cavendish town, Chester town,

SCHEDULE B - FY 2016 PROPOSED FAIR MARKET RENTS FOR EXISTING HOUSING PAGE 50

VERMONT continued

NONMETROPOLITAN COUNTIES	0 BR	1 BR	2 BR	3 BR	4 BR	Towns within nonmetropolitan counties
						Hartford town, Hartland town, Ludlow town, Norwich town, Plymouth town, Pomfret town, Reading town, Rochester town, Royalton town, Sharon town, Springfield town, Stockbridge town, Weathersfield town, Weston town, West Windsor town, Windsor town, Woodstock town

VIRGINIA

METROPOLITAN FMR AREAS	0 BR	1 BR	2 BR	3 BR	4 BR	Counties of FMR AREA within STATE
Blacksburg-Christiansburg-Radford, VA HMFA	554	679	786	1122	1372	Montgomery, Radford city
Buckingham County, VA HMFA	443	621	719	1019	1255	Buckingham
Charlottesville, VA HMFA	714	998	1157	1436	1658	Albemarle, Fluvanna, Greene, Nelson, Charlottesville city
Culpeper County, VA HMFA	589	825	955	1385	1667	Culpeper
Floyd County, VA HMFA	402	562	651	808	1137	Floyd
Franklin County, VA HMFA	457	515	683	944	1082	Franklin
Giles County, VA HMFA	438	521	651	853	1132	Giles
Harrisonburg, VA MSA	630	631	799	1060	1395	Rockingham, Harrisonburg city
Kingsport-Bristol-Bristol, TN-VA MSA	426	493	652	849	935	Scott, Washington, Bristol city
Lynchburg, VA MSA	564	601	741	992	1122	Amherst, Appomattox, Bedford, Campbell, Bedford city, Lynchburg city
Pulaski County, VA HMFA	535	562	651	808	1137	Pulaski
Rappahannock County, VA HMFA	849	857	1034	1303	1805	Rappahannock
Richmond, VA MSA	784	825	955	1261	1539	Amelia, Caroline, Charles, Chesterfield, Dinwiddie, Goochland, Hanover, Henrico, King William, New Kent, Powhatan, Prince George, Sussex, Colonial Heights city, Hopewell city, Petersburg city, Richmond city
Roanoke, VA HMFA	540	661	835	1116	1294	Botetourt, Craig, Roanoke, Roanoke city, Salem city
Staunton-Waynesboro, VA MSA	459	586	744	941	1244	Augusta, Staunton city, Waynesboro city
*Virginia Beach-Norfolk-Newport News, VA-NC HMFA	934	942	1137	1583	1985	Gloucester, Isle of Wight, James, Mathews, York, Chesapeake city, Hampton city, Newport News city, Norfolk city, Poquoson city, Portsmouth city, Suffolk city, Virginia Beach city, Williamsburg city
Warren County, VA HMFA	701	706	945	1301	1305	Warren
*Washington-Arlington-Alexandria, DC-VA-MD HMFA	1292	1386	1604	2119	2694	Arlington, Clarke, Fairfax, Fauquier, Loudoun, Prince William, Spotsylvania, Stafford, Alexandria city, Fairfax city, Falls Church city, Fredericksburg city, Manassas city, Manassas Park city
Winchester, VA-WV MSA	680	685	917	1308	1601	Frederick, Winchester city

NONMETROPOLITAN COUNTIES	0 BR	1 BR	2 BR	3 BR	4 BR	NONMETROPOLITAN COUNTIES	0 BR	1 BR	2 BR	3 BR	4 BR
Accomack	605	637	737	915	1223	Alleghany	528	531	651	889	892
Bath	535	538	651	862	1007	Bland	483	486	651	821	1007
Brunswick	515	518	694	861	1162	Buchanan	535	562	651	814	892
Carroll	535	562	651	935	1007	Charlotte	483	486	651	808	920
Cumberland	635	639	773	1127	1196	Dickenson	535	562	651	808	1007
Essex	566	696	806	1020	1247	Grayson	402	562	651	879	1066

SCHEDULE B - FY 2016 PROPOSED FAIR MARKET RENTS FOR EXISTING HOUSING PAGE 51

VIRGINIA continued

NONMETROPOLITAN COUNTIES	0 BR	1 BR	2 BR	3 BR	4 BR	NONMETROPOLITAN COUNTIES	0 BR	1 BR	2 BR	3 BR	4 BR
Greensville	515	518	656	907	1015	Halifax	535	541	651	808	892
Henry	535	562	651	869	931	Highland	535	538	651	862	1007
King and Queen	737	741	897	1113	1388	King George	789	794	1016	1338	1642
Lancaster	573	577	772	1118	1194	Lee	535	562	651	836	1007
Louisa	668	684	813	1185	1193	Lunenburg	549	552	668	869	1027
Madison	684	720	833	1138	1142	Mecklenburg	540	568	657	815	1006
Middlesex	732	737	987	1295	1694	Northampton	554	557	746	926	1023
Northumberland	535	538	651	949	1007	Nottoway	556	560	715	1000	1248
Orange	600	604	779	1135	1360	Page	550	579	670	945	1056
Patrick	535	562	651	924	1007	Pittsylvania	402	486	651	870	1084
Prince Edward	592	596	798	1012	1094	Richmond	539	542	726	974	995
Rockbridge	520	603	698	866	1219	Russell	535	561	651	872	1007
Shenandoah	483	592	775	1108	1183	Smyth	535	548	651	816	896
Southampton	562	566	752	933	1163	Surry	535	538	651	862	1007
Tazewell	513	517	651	808	1007	Westmoreland	532	536	717	1045	1109
Wise	518	521	651	808	930	Wythe	483	486	651	808	1109
Buena Vista city	520	603	698	866	1219	Clifton Forge city	528	531	651	889	892
Covington city	528	531	651	889	892	Danville city	515	518	651	909	1013
Emporia city	515	518	656	907	1015	Franklin city	562	566	752	933	1163
Galax city	535	562	651	935	1007	Lexington city	520	603	698	866	1219
Martinsville city	535	562	651	869	931	Norton city	518	521	651	808	930

WASHINGTON

METROPOLITAN FMR AREAS	0 BR	1 BR	2 BR	3 BR	4 BR	Counties of FMR AREA within STATE
Bellingham, WA MSA	598	692	900	1312	1571	Whatcom
Bremerton-Silverdale, WA MSA	619	770	1003	1437	1658	Kitsap
Columbia County, WA HMFA	541	591	791	1153	1288	Columbia
Kennewick-Richland, WA MSA	541	662	831	1113	1451	Benton, Franklin
Lewiston, ID-WA MSA	453	538	720	923	1171	Asotin
Longview, WA MSA	476	599	739	1077	1290	Cowlitz
Mount Vernon-Anacortes, WA MSA	655	711	951	1316	1404	Skagit
Olympia-Tumwater, WA MSA	742	817	1009	1471	1762	Thurston
Pend Oreille County, WA HMFA	444	514	688	1003	1108	Pend Oreille
Portland-Vancouver-Hillsboro, OR-WA MSA	744	857	1014	1474	1770	Clark, Skamania
Seattle-Bellevue, WA HMFA	1025	1197	1488	2169	2557	King, Snohomish
Spokane, WA HMFA	482	583	780	1130	1249	Spokane
Stevens County, WA HMFA	489	492	651	887	1054	Stevens
*Tacoma, WA HMFA	733	863	1113	1622	1943	Pierce
Walla Walla County, WA HMFA	617	654	875	1207	1528	Walla Walla
Wenatchee, WA MSA	523	584	782	1040	1245	Chelan, Douglas
Yakima, WA MSA	487	581	750	1026	1173	Yakima

SCHEDULE B - FY 2016 PROPOSED FAIR MARKET RENTS FOR EXISTING HOUSING PAGE 52

WASHINGTON continued

NONMETROPOLITAN COUNTIES	0 BR	1 BR	2 BR	3 BR	4 BR	NONMETROPOLITAN COUNTIES	0 BR	1 BR	2 BR	3 BR	4 BR
Adams	425	562	651	926	930	Clallam	480	582	779	1130	1134
Ferry	542	545	730	949	1188	Garfield	425	562	651	949	1059
Grant	476	538	693	945	1021	Grays Harbor	543	622	821	1169	1312
Island	675	792	972	1417	1511	Jefferson	606	704	943	1238	1646
Kittitas	634	650	870	1268	1519	Klickitat	663	697	807	1111	1406
Lewis	561	646	850	1126	1294	Lincoln	425	486	651	818	1137
Mason	585	708	948	1277	1299	Okanogan	469	589	717	940	1242
Pacific	519	629	842	1115	1154	San Juan	784	814	998	1363	1368
Wahkiakum	425	557	651	949	1059	Whitman	546	600	776	1131	1355

WEST VIRGINIA

METROPOLITAN FMR AREAS	0 BR	1 BR	2 BR	3 BR	4 BR	Counties of FMR AREA within STATE
Boone County, WV HMFA	364	429	574	731	1002	Boone
Charleston, WV HMFA	499	640	787	977	1079	Clay, Kanawha
Cumberland, MD-WV MSA	446	562	651	899	1100	Mineral
Fayette County, WV HMFA	363	455	589	776	1028	Fayette
Huntington-Ashland, WV-KY-OH HMFA	402	519	651	880	1052	Cabell, Wayne
Jefferson County, WV HMFA	640	644	862	1253	1408	Jefferson
Lincoln County, WV HMFA	419	474	586	793	962	Lincoln
Martinsburg, WV HMFA	566	638	784	1113	1369	Berkeley
Morgantown, WV MSA	518	619	716	931	981	Monongalia, Preston
Parkersburg-Vienna, WV MSA	532	563	681	981	1059	Wirt, Wood
Putnam County, WV HMFA	524	593	734	994	1205	Putnam
Raleigh County, WV HMFA	482	605	703	872	964	Raleigh
Weirton-Steubenville, WV-OH MSA	454	525	651	857	927	Brooke, Hancock
Wheeling, WV-OH MSA	513	540	651	818	892	Marshall, Ohio
Winchester, VA-WV MSA	680	685	917	1308	1601	Hampshire

NONMETROPOLITAN COUNTIES	0 BR	1 BR	2 BR	3 BR	4 BR	NONMETROPOLITAN COUNTIES	0 BR	1 BR	2 BR	3 BR	4 BR
Barbour	381	430	575	723	841	Braxton	467	490	575	784	807
Calhoun	457	468	575	725	841	Doddridge	427	430	575	734	841
Gilmer	457	464	575	733	839	Grant	462	465	622	772	1086
Greenbrier	403	547	653	810	938	Hardy	429	432	575	714	841
Harrison	517	520	649	821	890	Jackson	459	497	588	819	1027
Lewis	395	444	595	738	816	Logan	472	487	575	724	788
McDowell	457	497	575	714	1004	Marion	535	539	672	939	983
Mason	457	460	575	806	809	Mercer	405	468	577	766	872
Mingo	355	460	575	723	841	Monroe	469	502	590	732	856
Morgan	431	569	658	921	963	Nicholas	457	472	575	737	834
Pendleton	439	442	575	838	901	Pleasants	470	473	633	785	868
Pocahontas	443	446	586	795	857	Randolph	447	477	575	714	866
Ritchie	457	470	575	791	841	Roane	457	471	575	735	788
Summers	457	497	575	785	788	Taylor	355	497	575	806	809
Tucker	432	435	575	740	890	Tyler	457	497	575	714	1004

SCHEDULE B - FY 2016 PROPOSED FAIR MARKET RENTS FOR EXISTING HOUSING PAGE 53

WEST VIRGINIA continued

NONMETROPOLITAN COUNTIES	0 BR	1 BR	2 BR	3 BR	4 BR	NONMETROPOLITAN COUNTIES	0 BR	1 BR	2 BR	3 BR	4 BR
Upshur	439	442	592	769	924	Webster	427	430	575	714	788
Wetzel	457	486	575	714	1004	Wyoming	472	489	575	769	1004

WISCONSIN

METROPOLITAN FMR AREAS	0 BR	1 BR	2 BR	3 BR	4 BR	Counties of FMR AREA within STATE
Appleton, WI MSA	438	557	710	1023	1027	Calumet, Outagamie
Columbia County, WI HMFA	469	568	760	1103	1121	Columbia
Duluth, MN-WI MSA	488	570	746	960	1110	Douglas
Eau Claire, WI MSA	461	553	727	1036	1188	Chippewa, Eau Claire
Fond du Lac, WI MSA	459	525	700	910	1051	Fond du Lac
Green Bay, WI HMFA	461	562	747	1025	1028	Brown, Kewaunee
Green County, WI HMFA	465	499	663	904	966	Green
Iowa County, WI HMFA	515	542	726	901	995	Iowa
Janesville-Beloit, WI MSA	502	581	761	990	1043	Rock
Kenosha County, WI HMFA	560	685	908	1268	1502	Kenosha
La Crosse-Onalaska, WI-MN MSA	505	611	818	1170	1428	La Crosse
Madison, WI HMFA	647	771	925	1278	1462	Dane
*Milwaukee-Waukesha-West Allis, WI MSA	589	715	897	1134	1252	Milwaukee, Ozaukee, Washington, Waukesha
Minneapolis-St. Paul-Bloomington, MN-WI HMFA	648	804	1015	1427	1673	Pierce, St. Croix
Oconto County, WI HMFA	486	531	651	913	932	Oconto
Oshkosh-Neenah, WI MSA	519	541	696	927	1165	Winnebago
Racine, WI MSA	646	656	878	1190	1203	Racine
Sheboygan, WI MSA	417	519	676	844	938	Sheboygan
Wausau, WI MSA	487	557	725	955	1096	Marathon

NONMETROPOLITAN COUNTIES	0 BR	1 BR	2 BR	3 BR	4 BR	NONMETROPOLITAN COUNTIES	0 BR	1 BR	2 BR	3 BR	4 BR
Adams	444	552	651	878	1071	Ashland	444	486	651	808	902
Barron	512	514	688	854	995	Bayfield	444	486	651	863	1114
Buffalo	468	512	686	861	975	Burnett	444	486	651	889	892
Clark	443	486	651	808	892	Crawford	483	486	651	832	997
Dodge	552	556	744	1000	1020	Door	494	615	724	980	992
Dunn	478	529	700	956	959	Florence	461	504	675	899	930
Forest	452	500	651	884	897	Grant	492	512	651	827	1133
Green Lake	444	486	651	841	1008	Iron	402	486	651	904	1094
Jackson	444	486	651	808	892	Jefferson	545	660	883	1209	1213
Juneau	431	522	675	918	1039	Lafayette	444	499	651	860	1007
Langlade	502	515	690	947	950	Lincoln	444	486	651	911	1006
Manitowoc	437	530	709	880	1000	Marinette	444	486	651	854	1137
Marquette	493	539	722	906	990	Menominee	444	486	651	808	892
Monroe	474	574	768	969	1207	Oneida	498	560	720	893	1193
Pepin	402	562	651	949	1016	Polk	472	572	766	1002	1050
Portage	431	516	690	857	982	Price	444	486	651	808	892
Richland	411	498	666	901	967	Rusk	446	498	666	826	913
Sauk	586	621	792	1035	1086	Sawyer	462	541	724	898	992

SCHEDULE B - FY 2016 PROPOSED FAIR MARKET RENTS FOR EXISTING HOUSING PAGE 54

WISCONSIN continued

NONMETROPOLITAN COUNTIES	0 BR	1 BR	2 BR	3 BR	4 BR
Shawano	492	495	658	854	979
Trempealeau	444	486	651	869	1006
Vilas	480	535	704	874	975
Washburn	493	539	722	896	990
Waushara	464	508	680	844	932
Taylor	402	486	651	808	892
Vernon	477	498	666	826	913
Walworth	524	618	827	1122	1185
Waupaca	502	505	676	923	927
Wood	487	516	691	942	947

WYOMING

METROPOLITAN FMR AREAS	0 BR	1 BR	2 BR	3 BR	4 BR	Counties of FMR AREA within STATE
Casper, WY MSA	527	650	813	1153	1397	Natrona
Cheyenne, WY MSA	515	571	765	1088	1247	Laramie

NONMETROPOLITAN COUNTIES	0 BR	1 BR	2 BR	3 BR	4 BR
Albany	539	598	795	1154	1388
Campbell	639	700	929	1239	1273
Converse	487	596	708	967	970
Fremont	472	534	715	887	980
Hot Springs	458	520	651	949	1137
Lincoln	574	624	835	1081	1164
Park	471	570	685	973	1137
Sheridan	598	649	869	1078	1517
Sweetwater	635	690	923	1151	1611
Uinta	484	529	703	954	1203
Weston	517	649	751	1010	1124
Big Horn	448	503	651	851	1020
Carbon	508	584	738	1026	1069
Crook	486	610	706	932	1057
Goshen	448	532	651	829	975
Johnson	528	624	767	1118	1148
Niobrara	456	495	663	823	993
Platte	458	562	651	879	1000
Sublette	572	719	832	1213	1453
Teton	949	962	1155	1662	1729
Washakie	448	562	651	949	1137

AMERICAN SAMOA

NONMETROPOLITAN COUNTIES	0 BR	1 BR	2 BR	3 BR	4 BR
American Samoa	490	493	660	962	1043

GUAM

NONMETROPOLITAN COUNTIES	0 BR	1 BR	2 BR	3 BR	4 BR
Guam	621	700	937	1366	1636

NORTHERN MARIANA ISL

NONMETROPOLITAN COUNTIES	0 BR	1 BR	2 BR	3 BR	4 BR
Northern Mariana Islands	400	484	648	944	1131

SCHEDULE B - FY 2016 PROPOSED FAIR MARKET RENTS FOR EXISTING HOUSING PAGE 55

PUERTO RICO

METROPOLITAN FMR AREAS	0 BR	1 BR	2 BR	3 BR	4 BR	Counties of FMR AREA within STATE
Aguadilla-Isabela, PR HMFA	329	346	401	531	580	Aguada, Aguadilla, Añasco, Isabela, Lares, Moca, Rincón, San Sebastián
Arecibo, PR HMFA	409	422	498	667	702	Arecibo, Camuy, Hatillo
Barranquitas-Aibonito, PR HMFA	314	329	393	527	636	Aibonito, Barranquitas, Ciales, Maunabo, Orocovis
Caguas, PR HMFA	435	438	546	787	889	Caguas, Cayey, Cidra, Gurabo, San Lorenzo
Fajardo, PR HMFA	382	414	527	768	916	Ceiba, Fajardo, Luquillo
Guayama, PR MSA	356	361	433	553	600	Arroyo, Guayama, Patillas
Mayagüez, PR MSA	384	404	467	590	813	Hormigueros, Mayagüez
Ponce, PR HMFA	416	438	507	739	885	Juana Díaz, Ponce, Villalba
Quebradillas Municipio, PR HMFA	341	359	415	562	596	Quebradillas
San German, PR MSA	327	341	398	534	675	Cabo Rojo, Lajas, Sabana Grande, San Germán
San Juan-Guaynabo, PR HMFA	418	467	562	755	918	Aguas Buenas, Barceloneta, Bayamón, Canóvanas, Carolina, Cataño, Comerío, Corozal, Dorado, Florida, Guaynabo, Humacao, Juncos, Las Piedras, Loíza, Manatí, Morovis, Naguabo, Naranjito, Río Grande, San Juan, Toa Alta, Toa Baja, Trujillo Alto, Vega Alta, Vega Baja, Yabucoa
Utuado Municipio, PR HMFA	357	375	434	560	595	Utuado
Yauco, PR HMFA	348	350	424	546	740	Guánica, Guayanilla, Peñuelas, Yauco

NONMETROPOLITAN COUNTIES	0 BR	1 BR	2 BR	3 BR	4 BR	NONMETROPOLITAN COUNTIES	0 BR	1 BR	2 BR	3 BR	4 BR
Adjuntas	301	302	388	531	652	Coamo	301	302	388	531	652
Culebra	301	302	388	531	652	Jayuya	301	302	388	531	652
Las Marías	301	302	388	531	652	Maricao	301	302	388	531	652
Salinas	301	302	388	531	652	Santa Isabel	301	302	388	531	652
Vieques	301	302	388	531	652						

VIRGIN ISLANDS

NONMETROPOLITAN COUNTIES	0 BR	1 BR	2 BR	3 BR	4 BR	NONMETROPOLITAN COUNTIES	0 BR	1 BR	2 BR	3 BR	4 BR
St. Croix	657	694	876	1116	1302	St. John	848	1052	1375	1706	1885
St. Thomas	684	779	1014	1320	1390						

Note1: The FMRs for unit sizes larger than 4 BRs are calculated by adding 15% to the 4 BR FMR for each extra bedroom.
Note2: 50th percentile FMRs are indicated by an * before the FMR Area name.
Note3: PHAs participating in the Small Area Demonstration Program and the PHAs serving Dallas, TX using small area FMRs will use the FMRs found on Schedule B Addendum.

08/26/2015

SCHEDULE B Addendum - PROPOSED FY 2016 SMALL AREA FAIR MARKET RENTS FOR DEMONSTRATION PARTICIPANTS AND THE DALLAS, TX HUD METRO FMR AREA

All Housing Authorities within the Dallas, TX HMFA -- ZIP Codes

ZIP Codes	0 BR	1 BR	2 BR	3 BR	4 BR	ZIP Codes	0 BR	1 BR	2 BR	3 BR	4 BR
75001	680	820	1010	1370	1730	75002	830	990	1230	1670	2110
75006	630	750	930	1260	1600	75007	700	840	1040	1410	1780
75009	610	730	900	1220	1540	75010	830	990	1230	1670	2110
75011	620	740	920	1250	1580	75013	890	1060	1310	1780	2250
75014	620	740	920	1250	1580	75015	620	740	920	1250	1580
75016	620	740	920	1250	1580	75017	620	740	920	1250	1580
75019	810	970	1200	1630	2060	75022	950	1140	1410	1910	2420
75023	760	910	1130	1530	1940	75024	780	940	1160	1570	1990
75025	790	940	1170	1590	2010	75026	740	890	1100	1490	1890
75027	660	790	980	1330	1680	75028	950	1140	1410	1910	2420
75029	660	790	980	1330	1680	75030	620	740	920	1250	1580
75032	950	1140	1410	1910	2420	75033	680	820	1010	1370	1730
75034	800	960	1190	1610	2040	75035	940	1120	1390	1890	2390
75038	620	730	910	1230	1560	75039	810	970	1200	1630	2060
75040	750	900	1110	1510	1900	75041	610	730	900	1220	1540
75042	560	670	830	1130	1420	75043	660	790	980	1330	1680
75044	720	860	1060	1440	1820	75045	620	740	920	1250	1580
75046	620	740	920	1250	1580	75047	620	740	920	1250	1580
75048	830	990	1220	1650	2090	75049	620	740	920	1250	1580
75050	570	690	850	1150	1460	75051	580	690	860	1170	1480
75052	750	900	1110	1510	1900	75053	620	740	920	1250	1580
75054	620	740	920	1250	1580	75056	790	940	1170	1590	2010
75057	640	770	950	1290	1630	75058	740	890	1100	1490	1890
75060	580	690	860	1170	1480	75061	530	640	790	1070	1360
75062	590	700	870	1180	1490	75063	710	850	1050	1420	1800
75065	650	780	960	1300	1650	75067	660	780	970	1320	1660
75068	890	1060	1310	1780	2250	75069	630	750	930	1260	1600
75070	900	1070	1330	1800	2280	75071	760	900	1120	1520	1920
75074	690	820	1020	1380	1750	75075	680	810	1000	1360	1720
75077	850	1010	1250	1700	2150	75078	870	1030	1280	1740	2200
75080	720	860	1070	1450	1840	75081	750	900	1110	1510	1900
75082	830	990	1230	1670	2110	75083	620	740	920	1250	1580
75085	620	740	920	1250	1580	75086	740	890	1100	1490	1890
75087	790	940	1170	1590	2010	75088	940	1120	1390	1890	2390
75089	950	1140	1410	1910	2420	75093	760	900	1120	1520	1920
75094	950	1140	1410	1910	2420	75098	750	900	1110	1510	1900
75101	630	750	930	1260	1600	75104	800	950	1180	1600	2020
75106	620	740	920	1250	1580	75114	830	990	1230	1670	2110
75115	660	780	970	1320	1660	75116	640	770	950	1290	1630
75119	600	720	890	1210	1530	75123	620	740	920	1250	1580
75125	580	690	860	1170	1480	75126	950	1140	1410	1910	2420
75132	870	1030	1280	1740	2200	75134	660	780	970	1320	1660

SCHEDULE B Addendum - PROPOSED FY 2016 SMALL AREA FAIR MARKET RENTS FOR DEMONSTRATION PARTICIPANTS AND THE DALLAS, TX HUD METRO FMR AREA

All Housing Authorities within the Dallas, TX HMFA -- ZIP Codes continued

ZIP Codes	0 BR	1 BR	2 BR	3 BR	4 BR	ZIP Codes	0 BR	1 BR	2 BR	3 BR	4 BR
75135	550	650	810	1100	1390	75137	790	940	1170	1590	2010
75138	620	740	920	1250	1580	75141	570	680	840	1140	1440
75142	600	710	880	1190	1510	75143	550	650	810	1100	1390
75146	640	770	950	1290	1630	75147	510	610	750	1020	1290
75149	690	820	1020	1380	1750	75150	660	780	970	1320	1660
75152	560	670	830	1130	1420	75154	800	960	1190	1610	2040
75156	630	750	930	1260	1600	75157	630	750	930	1260	1600
75158	550	660	820	1110	1410	75159	640	770	950	1290	1630
75160	600	720	890	1210	1530	75161	630	750	930	1260	1600
75164	690	820	1020	1380	1750	75165	630	750	930	1260	1600
75166	950	1140	1410	1910	2420	75167	890	1070	1320	1790	2270
75168	630	750	930	1260	1600	75169	550	650	810	1100	1390
75172	490	580	720	980	1240	75173	760	910	1130	1530	1940
75180	620	740	920	1250	1580	75181	950	1140	1410	1910	2420
75182	500	600	740	1000	1270	75185	620	740	920	1250	1580
75187	620	740	920	1250	1580	75189	700	840	1040	1410	1780
75201	930	1110	1380	1870	2370	75202	910	1080	1340	1820	2300
75203	490	590	730	990	1250	75204	800	960	1190	1610	2040
75205	840	1000	1240	1680	2130	75206	670	800	990	1340	1700
75207	950	1140	1410	1910	2420	75208	540	650	800	1080	1370
75209	800	950	1180	1600	2020	75210	470	570	700	950	1200
75211	550	660	820	1110	1410	75212	530	630	780	1060	1340
75214	600	710	880	1190	1510	75215	530	630	780	1060	1340
75216	540	650	800	1080	1370	75217	620	740	920	1250	1580
75218	720	860	1070	1450	1840	75219	680	820	1010	1370	1730
75220	510	610	750	1020	1290	75221	620	740	920	1250	1580
75222	620	740	920	1250	1580	75223	550	660	820	1110	1410
75224	530	640	790	1070	1360	75225	950	1140	1410	1910	2420
75226	730	870	1080	1460	1850	75227	560	670	830	1130	1420
75228	510	610	760	1030	1300	75229	600	720	890	1210	1530
75230	550	660	820	1110	1410	75231	490	580	720	980	1240
75232	550	660	820	1110	1410	75233	570	690	850	1150	1460
75234	640	770	950	1290	1630	75235	620	740	920	1250	1580
75236	580	690	860	1170	1480	75237	540	650	800	1080	1370
75238	530	630	780	1060	1340	75240	570	680	840	1140	1440
75241	660	790	980	1330	1680	75242	620	740	920	1250	1580
75243	520	620	770	1040	1320	75244	750	900	1110	1510	1900
75246	470	560	690	940	1180	75247	600	710	880	1190	1510
75248	660	790	980	1330	1680	75249	830	990	1230	1670	2110
75250	620	740	920	1250	1580	75251	830	990	1230	1670	2110
75252	560	670	830	1130	1420	75253	620	740	920	1250	1580

SCHEDULE B Addendum - PROPOSED FY 2016 SMALL AREA FAIR MARKET RENTS FOR DEMONSTRATION PARTICIPANTS AND THE DALLAS, TX HUD METRO FMR AREA

All Housing Authorities within the Dallas, TX HMFA -- ZIP Codes continued

ZIP Codes	0 BR	1 BR	2 BR	3 BR	4 BR	ZIP Codes	0 BR	1 BR	2 BR	3 BR	4 BR
75254	620	730	910	1230	1560	75270	620	740	920	1250	1580
75287	600	710	880	1190	1510	75313	620	740	920	1250	1580
75315	620	740	920	1250	1580	75336	620	740	920	1250	1580
75339	620	740	920	1250	1580	75342	620	740	920	1250	1580
75354	620	740	920	1250	1580	75355	620	740	920	1250	1580
75356	620	740	920	1250	1580	75357	620	740	920	1250	1580
75360	620	740	920	1250	1580	75367	620	740	920	1250	1580
75370	740	890	1100	1490	1890	75371	620	740	920	1250	1580
75372	620	740	920	1250	1580	75374	620	740	920	1250	1580
75376	620	740	920	1250	1580	75378	620	740	920	1250	1580
75379	620	740	920	1250	1580	75380	620	740	920	1250	1580
75381	620	740	920	1250	1580	75382	620	740	920	1250	1580
75390	620	740	920	1250	1580	75401	510	610	750	1020	1290
75402	550	660	820	1110	1410	75403	530	630	780	1060	1340
75404	530	630	780	1060	1340	75407	610	730	900	1220	1540
75409	720	860	1060	1440	1820	75422	580	690	860	1170	1480
75423	600	710	880	1190	1510	75424	660	790	980	1330	1680
75428	490	590	730	990	1250	75442	610	730	900	1220	1540
75448	530	630	780	1060	1340	75449	440	520	650	880	1120
75452	450	540	670	910	1150	75453	680	820	1010	1370	1730
75454	680	820	1010	1370	1730	75469	530	630	780	1060	1340
75474	470	570	700	950	1200	75491	740	890	1100	1490	1890
75495	600	710	880	1190	1510	75496	490	580	720	980	1240
76041	630	750	930	1260	1600	76050	510	610	750	1020	1290
76052	950	1140	1410	1910	2420	76055	630	750	930	1260	1600
76064	500	600	740	1000	1270	76065	700	840	1040	1410	1780
76078	640	770	950	1290	1630	76084	520	620	770	1040	1320
76092	620	740	920	1250	1580	76177	910	1080	1340	1820	2300
76201	510	610	760	1030	1300	76202	660	790	980	1330	1680
76204	660	790	980	1330	1680	76205	620	730	910	1230	1560
76206	660	790	980	1330	1680	76207	650	780	960	1300	1650
76208	660	790	980	1330	1680	76209	590	700	870	1180	1490
76210	820	980	1210	1640	2080	76226	950	1140	1410	1910	2420
76227	920	1100	1360	1840	2330	76234	570	680	840	1140	1440
76247	730	870	1080	1460	1850	76249	820	980	1210	1640	2080
76258	620	730	910	1230	1560	76259	690	820	1020	1380	1750
76262	740	880	1090	1480	1870	76266	680	820	1010	1370	1730
76272	520	620	770	1040	1320	76623	630	750	930	1260	1600
76626	630	750	930	1260	1600	76641	630	750	930	1260	1600
76651	540	650	800	1080	1370	76670	510	610	760	1030	1300

SCHEDULE B Addendum - PROPOSED FY 2016 SMALL AREA FAIR MARKET RENTS FOR DEMONSTRATION PARTICIPANTS AND THE DALLAS, TX HUD METRO FMR AREA

Chattanooga Housing Authority -- ZIP Codes

ZIP Codes	0 BR	1 BR	2 BR	3 BR	4 BR	ZIP Codes	0 BR	1 BR	2 BR	3 BR	4 BR
37302	570	700	870	1150	1420	37308	420	520	640	850	1050
37311	470	570	710	940	1160	37315	510	630	780	1030	1280
37336	560	700	860	1140	1410	37338	420	520	640	850	1050
37341	600	740	910	1200	1490	37343	530	650	810	1070	1320
37350	600	740	920	1220	1500	37351	510	630	780	1030	1280
37353	470	580	720	950	1180	37363	560	690	850	1120	1390
37373	420	520	640	850	1050	37377	600	740	920	1220	1500
37379	520	640	790	1040	1290	37384	510	630	780	1030	1280
37401	510	630	780	1030	1280	37402	420	520	640	850	1050
37403	450	550	680	900	1110	37404	470	570	710	940	1160
37405	540	660	820	1080	1340	37406	430	530	650	860	1060
37407	510	620	770	1020	1260	37408	420	520	640	850	1050
37409	420	520	640	850	1050	37410	420	520	640	850	1050
37411	450	560	690	910	1130	37412	500	610	760	1000	1240
37414	510	630	780	1030	1280	37415	490	610	750	990	1230
37416	540	660	820	1080	1340	37419	450	560	690	910	1130
37421	580	710	880	1160	1440	37422	510	630	780	1030	1280
37424	510	630	780	1030	1280	37450	510	630	780	1030	1280

The Housing Authority of the City of Laredo -- ZIP Codes

ZIP Codes	0 BR	1 BR	2 BR	3 BR	4 BR	ZIP Codes	0 BR	1 BR	2 BR	3 BR	4 BR
78040	470	510	650	860	990	78041	560	610	770	1020	1170
78043	510	550	700	930	1060	78045	730	790	1000	1320	1520
78046	550	590	750	990	1140						

The Housing Authority of the City of Long Beach -- ZIP Codes

ZIP Codes	0 BR	1 BR	2 BR	3 BR	4 BR	ZIP Codes	0 BR	1 BR	2 BR	3 BR	4 BR
90802	760	930	1220	1650	1850	90803	990	1200	1580	2140	2390
90804	830	1010	1330	1800	2010	90805	790	960	1260	1700	1910
90806	780	940	1240	1680	1880	90807	880	1070	1410	1910	2140
90808	1070	1300	1710	2310	2590	90810	780	940	1240	1680	1880
90813	720	880	1150	1550	1740	90815	1140	1390	1830	2470	2770
90822	900	1100	1440	1950	2180						

The Housing Authority of the County of Cook -- ZIP Codes

ZIP Codes	0 BR	1 BR	2 BR	3 BR	4 BR	ZIP Codes	0 BR	1 BR	2 BR	3 BR	4 BR
60004	930	1070	1240	1580	1860	60005	840	970	1130	1440	1700
60006	780	900	1050	1340	1580	60007	800	920	1070	1360	1610
60008	870	1010	1170	1490	1760	60009	780	900	1050	1340	1580
60010	1160	1340	1560	1990	2340	60011	780	900	1050	1340	1580

SCHEDULE B Addendum - PROPOSED FY 2016 SMALL AREA FAIR MARKET RENTS FOR DEMONSTRATION PARTICIPANTS AND THE DALLAS, TX HUD METRO FMR AREA

The Housing Authority of the County of Cook -- ZIP Codes continued

ZIP Codes	0 BR	1 BR	2 BR	3 BR	4 BR	ZIP Codes	0 BR	1 BR	2 BR	3 BR	4 BR
60015	1170	1350	1570	2000	2360	60016	800	920	1070	1360	1610
60017	780	900	1050	1340	1580	60018	710	820	950	1210	1430
60022	1170	1350	1570	2000	2360	60025	910	1050	1220	1560	1830
60026	1040	1190	1390	1770	2090	60029	780	900	1050	1340	1580
60043	1170	1350	1570	2000	2360	60053	1150	1320	1540	1960	2310
60056	780	890	1040	1330	1560	60062	1160	1330	1550	1980	2330
60065	780	900	1050	1340	1580	60067	930	1070	1250	1590	1880
60068	910	1050	1220	1560	1830	60070	790	910	1060	1350	1590
60074	850	980	1140	1450	1710	60076	910	1050	1220	1560	1830
60077	860	990	1150	1470	1730	60078	780	900	1050	1340	1580
60089	990	1130	1320	1680	1980	60090	820	950	1100	1400	1650
60091	1170	1350	1570	2000	2360	60093	1150	1320	1540	1960	2310
60103	1020	1180	1370	1750	2060	60104	780	900	1050	1340	1580
60107	1170	1350	1570	2000	2360	60120	750	870	1010	1290	1520
60126	960	1100	1280	1630	1920	60130	750	870	1010	1290	1520
60131	670	770	900	1150	1350	60133	850	980	1140	1450	1710
60141	780	900	1050	1340	1580	60153	720	830	970	1240	1460
60154	1140	1310	1530	1950	2300	60155	660	760	890	1130	1340
60159	780	900	1050	1340	1580	60160	690	800	930	1190	1400
60161	780	900	1050	1340	1580	60162	710	820	950	1210	1430
60163	770	880	1030	1310	1550	60164	660	760	890	1130	1340
60165	720	820	960	1220	1440	60168	780	900	1050	1340	1580
60169	830	950	1110	1420	1670	60171	690	800	930	1190	1400
60172	840	970	1130	1440	1700	60173	990	1130	1320	1680	1980
60176	690	800	930	1190	1400	60192	1170	1350	1570	2000	2360
60193	940	1080	1260	1610	1890	60194	990	1130	1320	1680	1980
60195	960	1110	1290	1640	1940	60201	1010	1160	1350	1720	2030
60202	870	1010	1170	1490	1760	60203	1110	1280	1490	1900	2240
60204	780	900	1050	1340	1580	60301	1100	1270	1480	1890	2220
60302	800	920	1070	1360	1610	60303	780	900	1050	1340	1580
60304	800	920	1070	1360	1610	60305	810	930	1080	1380	1620
60402	730	840	980	1250	1470	60406	660	760	890	1130	1340
60409	720	830	970	1240	1460	60411	750	870	1010	1290	1520
60412	780	900	1050	1340	1580	60415	700	810	940	1200	1410
60419	870	1010	1170	1490	1760	60422	970	1120	1300	1660	1950
60423	820	950	1100	1400	1650	60425	780	890	1040	1330	1560
60426	750	870	1010	1290	1520	60428	1030	1190	1380	1760	2070
60429	1040	1190	1390	1770	2090	60430	800	920	1070	1360	1610
60438	750	860	1000	1280	1500	60439	750	860	1000	1280	1500
60443	920	1060	1230	1570	1850	60445	730	840	980	1250	1470
60452	760	880	1020	1300	1530	60453	770	880	1030	1310	1550

SCHEDULE B Addendum - PROPOSED FY 2016 SMALL AREA FAIR MARKET RENTS FOR DEMONSTRATION PARTICIPANTS AND THE DALLAS, TX HUD METRO FMR AREA

The Housing Authority of the County of Cook -- ZIP Codes continued

ZIP Codes	0 BR	1 BR	2 BR	3 BR	4 BR	ZIP Codes	0 BR	1 BR	2 BR	3 BR	4 BR
60454	780	900	1050	1340	1580	60455	710	820	950	1210	1430
60456	490	560	650	830	980	60457	700	810	940	1200	1410
60458	730	840	980	1250	1470	60459	810	940	1090	1390	1640
60461	780	900	1050	1340	1580	60462	810	940	1090	1390	1640
60463	1170	1350	1570	2000	2360	60464	1170	1350	1570	2000	2360
60465	760	880	1020	1300	1530	60466	770	880	1030	1310	1550
60467	1170	1350	1570	2000	2360	60469	830	950	1110	1420	1670
60471	790	910	1060	1350	1590	60472	680	780	910	1160	1370
60473	1120	1290	1500	1910	2250	60475	680	780	910	1160	1370
60476	610	700	820	1050	1230	60477	790	910	1060	1350	1590
60478	1160	1340	1560	1990	2340	60480	690	790	920	1170	1380
60482	710	820	950	1210	1430	60487	900	1040	1210	1540	1820
60499	780	900	1050	1340	1580	60501	690	800	930	1190	1400
60513	780	890	1040	1330	1560	60521	1150	1320	1540	1960	2310
60525	780	900	1050	1340	1580	60526	790	910	1060	1350	1590
60527	880	1010	1180	1500	1770	60534	750	870	1010	1290	1520
60546	700	810	940	1200	1410	60558	1170	1350	1570	2000	2360
60601	1170	1350	1570	2000	2360	60602	1170	1350	1570	2000	2360
60603	1170	1350	1570	2000	2360	60604	1170	1350	1570	2000	2360
60605	1170	1350	1570	2000	2360	60606	1170	1350	1570	2000	2360
60607	1160	1330	1550	1980	2330	60608	640	740	860	1100	1290
60609	650	750	870	1110	1310	60610	1050	1210	1410	1800	2120
60611	1170	1350	1570	2000	2360	60612	780	900	1050	1340	1580
60613	920	1060	1230	1570	1850	60614	1060	1220	1420	1810	2130
60615	760	880	1020	1300	1530	60616	750	860	1000	1280	1500
60617	670	770	900	1150	1350	60618	810	930	1080	1380	1620
60619	690	790	920	1170	1380	60620	720	830	970	1240	1460
60621	710	820	950	1210	1430	60622	930	1070	1240	1580	1860
60623	640	740	860	1100	1290	60624	770	880	1030	1310	1550
60625	770	880	1030	1310	1550	60626	690	800	930	1190	1400
60628	790	910	1060	1350	1590	60629	720	820	960	1220	1440
60630	780	890	1040	1330	1560	60631	870	1000	1160	1480	1740
60632	660	760	890	1130	1340	60633	720	830	970	1240	1460
60634	750	870	1010	1290	1520	60636	730	840	980	1250	1470
60637	730	840	980	1250	1470	60638	730	840	980	1250	1470
60639	750	860	1000	1280	1500	60640	710	820	950	1210	1430
60641	720	830	970	1240	1460	60642	960	1110	1290	1640	1940
60643	730	840	980	1250	1470	60644	710	820	950	1210	1430
60645	810	930	1080	1380	1620	60646	730	840	980	1250	1470
60647	810	930	1080	1380	1620	60649	670	770	900	1150	1350

60651	760	880	1020	1300	1530	60652	810	940	1090	1390	1640

SCHEDULE B Addendum - PROPOSED FY 2016 SMALL AREA FAIR MARKET RENTS FOR DEMONSTRATION PARTICIPANTS AND THE DALLAS, TX HUD METRO FMR AREA

The Housing Authority of the County of Cook -- ZIP Codes continued

ZIP Codes	0 BR	1 BR	2 BR	3 BR	4 BR	ZIP Codes	0 BR	1 BR	2 BR	3 BR	4 BR
60653	630	720	840	1070	1260	60654	1170	1350	1570	2000	2360
60655	780	900	1050	1340	1580	60656	840	960	1120	1430	1680
60657	960	1100	1280	1630	1920	60659	790	910	1060	1350	1590
60660	690	790	920	1170	1380	60661	1170	1350	1570	2000	2360
60666	780	900	1050	1340	1580	60677	780	900	1050	1340	1580
60681	780	900	1050	1340	1580	60682	780	900	1050	1340	1580
60690	780	900	1050	1340	1580	60693	780	900	1050	1340	1580
60694	780	900	1050	1340	1580	60706	750	860	1000	1280	1500
60707	720	820	960	1220	1440	60712	1170	1350	1570	2000	2360
60714	780	890	1040	1330	1560	60803	700	810	940	1200	1410
60804	670	770	900	1150	1350	60805	760	880	1020	1300	1530
60827	740	850	990	1260	1490						

Town of Mamaroneck Public Housing Agency -- ZIP Codes

ZIP Codes	0 BR	1 BR	2 BR	3 BR	4 BR	ZIP Codes	0 BR	1 BR	2 BR	3 BR	4 BR
10501	1300	1370	1580	2040	2310	10502	1680	1770	2050	2650	3000
10503	1300	1370	1580	2040	2310	10504	1680	1760	2040	2630	2980
10505	1300	1370	1580	2040	2310	10506	1310	1380	1600	2070	2340
10507	1380	1450	1680	2170	2460	10509	1290	1360	1570	2030	2290
10510	1730	1810	2100	2710	3070	10511	1440	1510	1750	2260	2560
10514	1500	1580	1830	2360	2670	10517	1620	1700	1970	2540	2880
10518	1400	1480	1710	2210	2500	10519	1300	1370	1580	2040	2310
10520	1190	1250	1450	1870	2120	10522	1360	1430	1650	2130	2410
10523	1730	1810	2100	2710	3070	10526	1300	1370	1580	2040	2310
10527	1300	1370	1580	2040	2310	10528	1730	1810	2100	2710	3070
10530	1490	1560	1810	2340	2650	10532	1770	1860	2150	2780	3140
10533	1340	1410	1630	2100	2380	10535	1550	1630	1890	2440	2760
10536	1400	1480	1710	2210	2500	10537	1070	1120	1300	1680	1900
10538	1480	1560	1800	2320	2630	10540	1300	1370	1580	2040	2310
10541	1270	1340	1550	2000	2270	10543	1500	1580	1830	2360	2670
10545	1300	1370	1580	2040	2310	10546	1300	1370	1580	2040	2310
10547	1220	1280	1480	1910	2160	10548	1400	1480	1710	2210	2500

10549	1310	1380	1600	2070	2340	10550	1110	1170	1350	1740	1970
10551	1300	1370	1580	2040	2310	10552	1160	1220	1410	1820	2060
10553	1170	1230	1420	1830	2080	10560	1820	1920	2220	2870	3240
10562	1320	1390	1610	2080	2350	10566	1240	1300	1510	1950	2210
10567	1410	1490	1720	2220	2510	10570	1480	1560	1800	2320	2630
10573	1400	1480	1710	2210	2500	10576	1820	1920	2220	2870	3240
10577	1300	1370	1580	2040	2310	10578	1300	1370	1580	2040	2310
10580	1740	1830	2120	2740	3100	10583	1820	1920	2220	2870	3240

SCHEDULE B Addendum - PROPOSED FY 2016 SMALL AREA FAIR MARKET RENTS FOR DEMONSTRATION PARTICIPANTS AND THE DALLAS, TX HUD METRO FMR AREA

Town of Mamaroneck Public Housing Agency -- ZIP Codes continued

ZIP Codes	0 BR	1 BR	2 BR	3 BR	4 BR	ZIP Codes	0 BR	1 BR	2 BR	3 BR	4 BR
10587	1300	1370	1580	2040	2310	10588	990	1040	1200	1550	1750
10589	1820	1920	2220	2870	3240	10590	1820	1920	2220	2870	3240
10591	1390	1460	1690	2180	2470	10594	1550	1630	1890	2440	2760
10595	1450	1520	1760	2270	2570	10596	1040	1100	1270	1640	1860
10597	1300	1370	1580	2040	2310	10598	1270	1330	1540	1990	2250
10601	1340	1410	1630	2100	2380	10602	1300	1370	1580	2040	2310
10603	1410	1490	1720	2220	2510	10604	1500	1570	1820	2350	2660
10605	1310	1370	1590	2050	2320	10606	1430	1500	1740	2250	2540
10607	1720	1810	2090	2700	3050	10701	1130	1190	1380	1780	2020
10702	1300	1370	1580	2040	2310	10703	1220	1290	1490	1920	2180
10704	1220	1290	1490	1920	2180	10705	1090	1150	1330	1720	1940
10706	1420	1490	1730	2230	2530	10707	1500	1580	1830	2360	2670
10708	1380	1450	1680	2170	2460	10709	1430	1500	1740	2250	2540
10710	1220	1280	1480	1910	2160	10801	1240	1300	1510	1950	2210
10802	1300	1370	1580	2040	2310	10803	1400	1470	1700	2200	2480
10804	1380	1450	1680	2170	2460	10805	1290	1360	1570	2030	2290

SCHEDULE D—FY 2016 EXCEPTION FAIR MARKET RENTS FOR MANUFACTURED HOME SPACES IN THE SECTION 8 HOUSING CHOICE VOUCHER PROGRAM

State	Area name	Space rent
California	Los Angeles-Long Beach, CA HUD Metro FMR Area	$714
	Santa Anna-Anaheim-Irvine, CA HMFA	867
	Riverside-San Bernardino-Ontario, CA MSA*	565
	San Diego-Carlsbad-San Marcos, CA MSA	859
	Santa Rosa-Petaluma, CA MSA	814
	Vallejo-Fairfield, CA MSA	655
Maryland	California-Lexington Park, MD MSA	536
Oregon	Bend, OR MSA	371
	Salem, OR MSA	548
Pennsylvania	Gettysburg, PA MSA	589
Washington	Olympia, WA MSA	659
	Seattle-Bellevue, WA HMFA	728
West Virginia	Logan County	485
	McDowell County	485
	Mercer County	485
	Mingo County	485
	Wyoming County	485

*50th percentile FMR area.

[FR Doc. 2015–22023 Filed 9–4–15; 8:45 am]

BILLING CODE 4210–67–C

DEPARTMENT OF THE INTERIOR

National Park Service

[NPS–AKRO–CAKR–19169;PPAKAKROR4; PPMPRLE1Y.LS0000]

Amended Meeting Notice for the National Park Service Subsistence Resource Commission for the Cape Krusenstern National Monument

AGENCY: National Park Service, Interior.

ACTION: Amended meeting notice.

SUMMARY: In accordance with the Federal Advisory Committee Act (16 U.S.C. Appendix 1–16), notice is hereby given of a change in the meeting schedule of the Cape Krusenstern National Monument Subsistence Resource Commission (SRC), July 22, 2015, meeting to September 17–18, 2015, at the Northwest Arctic Heritage Center in Kozebue, Alaska which was published in the **Federal Register**, Vol. 80, July 6, 2015, pp. 38461–38462. The SRC will meet on Thursday, September 17, 2015, from 1:00 p.m. to 5:00 p.m. or until business is completed on Friday, September 18, 2015. Teleconference participants must call the Cape Krusenstern National Monument office at (907) 442–3890 by Wednesday, September 16, 2015, prior to the meeting to receive teleconference passcode information.

FOR FURTHER INFORMATION CONTACT: For more detailed information regarding this meeting or if you are interested in applying for SRC membership contact Designated Federal Official Frank Hays, Superintendent, at (907) 442–3890, or via email at *frank_hays@nps.gov,* or Clarence Summers, Subsistence Manager, at (907) 644–3603 or via email at *clarence_summers@nps.gov.*

Dated: September 2, 2015.

Alma Ripps,

Chief, Office of Policy.

[FR Doc. 2015–22559 Filed 9–4–15; 8:45 am]

BILLING CODE 4310–EE–P

DEPARTMENT OF THE INTERIOR

National Park Service

[NPS–NER–FIIS–18494; PX.P0201786A.00.1]

Notice of Intent To Prepare an Environmental Impact Statement for a Breach Management Plan for Fire Island National Seashore, New York

AGENCY: National Park Service, Interior.

ACTION: Notice of intent.

SUMMARY: The National Park Service (NPS) will prepare an Environmental Impact Statement (EIS) for a Breach Management Plan at Fire Island National Seashore (Seashore), New York. The purpose of the Breach Management Plan is to address issues associated with a breach that developed within the Otis Pike Fire Island High Dune Wilderness at the Seashore. The Breach Management Plan and EIS process is needed to analyze all the feasible alternatives and to make a decision on whether or not to close the breach.

DATES: The public scoping period will commence on the date this notice is published in the **Federal Register** and last for 30 days.

ADDRESSES: Information will be available for public review online at *http://parkplanning.nps.gov/fiis,* at Seashore Headquarters, the Fire Island Lighthouse, and the Wilderness Visitor Center. Comments can be submitted via the Internet at *http://parkplanning.nps.gov/fiis* and by mailing or hand-delivering comments to Fire Island National Seashore, Attn: Breach Management Plan, 120 Laurel St, Patchogue, NY 11772.

FOR FURTHER INFORMATION CONTACT: Elizabeth Rogers (631–687–4766) or Michael Bilecki (631–687–4760)

SUPPLEMENTARY INFORMATION: Pursuant to the National Environmental Policy Act of 1969, 42 U.S.C. 4332(2)(C), the NPS is preparing a Breach Management Plan and EIS to address issues associated with a breach that developed within the Otis Pike Fire Island High Dune Wilderness at the Seashore.

In October 2012, Hurricane Sandy caused two breaches on Fire Island within the boundaries of Fire Island National Seashore (FIIS): (1) within Smith Point County Park (which was subsequently closed by Suffolk County); and (2) within the vicinity of Old Inlet in the only federally designated wilderness in the State of New York.

Since Hurricane Sandy, and in accordance with the 1997 Breach Contingency Plan (BCP) prepared by the U.S. Army Corps of Engineers (USACE), the NPS, US Geological Survey (USGS), USACE, and other coastal experts have been monitoring the breach at Old Inlet and associated water levels and water quality in Great South Bay and breach channel conditions.

The Breach Management Plan and EIS process is needed to analyze all the feasible alternatives and to make a

decision on whether or not to close the breach. Actions addressing these issues will be designed and undertaken in support of the long-term protection, preservation, and restoration of Seashore resources. Information collected as part of the breach monitoring program will be utilized in the analysis of alternatives for the Draft Environmental Impact Statement. A scoping newsletter will be prepared which identifies the issues and statements of purpose, need, and objectives identified to date during internal scoping meetings. Copies of that information and other updates may be obtained online at *http://parkplanning.nps.gov/fiis* or at the address and phone numbers listed below.

If you wish to comment on the purpose, need, objectives, or on any other issues associated with the plan, you may submit your comments via the Internet at *http://parkplanning.nps.gov/fiis* and by mailing or hand-delivering comments to Fire Island National Seashore, Attn: Breach Management Plan, 120 Laurel St, Patchogue, NY 11772. Before including your address, phone number, email address, or other personal identifying information in your comment, you should be aware that your entire comment—including your personal identifying information—may be made publicly available at any time. While you can ask us in your comment to withhold your personal identifying information from public review, we cannot guarantee that we will be able to do so.

The responsible official for this Draft Breach Management Plan/EIS is the Regional Director, NPS Northeast Region, U.S. Custom House, 200 Chestnut Street, Fifth Floor, Philadelphia, PA 19106.

Dated: August 31, 2015.

Michael A. Caldwell,

Regional Director, Northeast Region, National Park Service.

[FR Doc. 2015–22560 Filed 9–4–15; 8:45 am]

BILLING CODE 4310–WV–P

DEPARTMENT OF THE INTERIOR

Office of Surface Mining Reclamation and Enforcement

[S1D1 SS08011000SX064A000156S180110; S2D2SS08011000SX064A00015X501520]

Notice of Proposed Information Collection; Request for Comments for 1029–0094

AGENCY: Office of Surface Mining Reclamation and Enforcement, Interior.

ACTION: Notice and request for comments.

SUMMARY: In compliance with the Paperwork Reduction Act of 1995, the Office of Surface Mining Reclamation and Enforcement (OSMRE) is announcing its intention to seek the Office of Management and Budget (OMB) approval to continue the collection of information for our General provisions. This information collection activity was previously approved by OMB and assigned clearance number 1029–0094.

DATES: Comments on the proposed information collection activity must be received by November 9, 2015, to be assured of consideration.

ADDRESSES: Submit comments to John Trelease, Office of Surface Mining Reclamation and Enforcement, 1951 Constitution Ave, NW., Room 203–SIB, Washington, DC 20240. Comments may also be submitted electronically to *jtrelease@osmre.gov.*

FOR FURTHER INFORMATION CONTACT: To receive a copy of the information collection request contact John Trelease, at (202) 208–2783 or via email at *jtrelease@osmre.gov.*

SUPPLEMENTARY INFORMATION: The Office of Management and Budget (OMB) regulations at 5 CFR 1320, which implement provisions of the Paperwork Reduction Act of 1995 (Pub. L. 104–13), require that interested members of the public and affected agencies have an opportunity to comment on information collection and recordkeeping activities [see 5 CFR 1320.8 (d)]. This notice identifies an information collection that OSMRE will be submitting to OMB for approval. This collection is contained in 30 CFR part 700—General. OSMRE will request a 3-year term of approval for this information collection activity. Responses are required to obtain a benefit. We may not conduct or sponsor, and a person is not required to respond to a collection of information unless it displays a currently valid OMB control number.

Before including your address, phone number, email address, or other personal identifying information in your comment, you should be aware that your entire comment, including your personal identifying information, may be made publicly available at any time. While you can ask us in your comment to withhold your personal identifying information from public review, we cannot guarantee that we will be able to do so. Comments are invited on: (1) The need for the collection of information for the performance of the functions of the agency; (2) the accuracy of the agency's burden estimates; (3) ways to enhance the quality, utility and clarity of the information collection; and (4) ways to minimize the information collection burden on respondents, such as use of automated means of collection of the information. A summary of the public comments will accompany OSMRE's submission of the information collection request to OMB.

This notice provides the public with 60 days in which to comment on the following information collection activity:

Title: 30 CFR part 700—General.

OMB Control Number: 1029–0094.

Summary: This Part establishes procedures and requirements for terminating jurisdiction of surface coal mining and reclamation operations, petitions for rulemaking, and citizen suits filed under the Surface Mining Control and Reclamation Act of 1977.

Bureau Form Number: None.

Frequency of Collection: Once.

Description of Respondents: State and tribal regulatory authorities, private citizens and citizen groups, and surface coal mining companies.

Total Annual Responses: 23.

Total Annual Burden Hours: 80.

Dated: September 1, 2015.

John A. Trelease,

Acting Chief, Division of Regulatory Support.

[FR Doc. 2015–22551 Filed 9–4–15;8:45 am]

BILLING CODE 4310–05–P

INTERNATIONAL TRADE COMMISSION

[Investigation No. 337–TA–949]

Certain Audio Processing Hardware and Software Products Containing Same; Commission Determination Not To Review an Initial Determination Granting Intervenor Status to Conexant Systems Inc. and Waves Audio, Ltd.

AGENCY: U.S. International Trade Commission.

ACTION: Notice.

SUMMARY: Notice is hereby given that the U.S. International Trade Commission has determined not to review an initial determination (''ID'') (Order No. 15) granting intervenor status to Conexant Systems Inc. and Waves Audio Ltd.

FOR FURTHER INFORMATION CONTACT: Robert Needham, Office of the General Counsel, U.S. International Trade Commission, 500 E Street SW., Washington, DC 20436, telephone (202) 708–5468. Copies of non-confidential documents filed in connection with this

investigation are or will be available for inspection during official business hours (8:45 a.m. to 5:15 p.m.) in the Office of the Secretary, U.S. International Trade Commission, 500 E Street SW., Washington, DC 20436, telephone (202) 205–2000. General information concerning the Commission may also be obtained by accessing its Internet server (*http://www.usitc.gov*). The public record for this investigation may be viewed on the Commission's electronic docket (EDIS) at *http://edis.usitc.gov.* Hearing-impaired persons are advised that information on this matter can be obtained by contacting the Commission's TDD terminal on (202) 205–1810.

SUPPLEMENTARY INFORMATION: The Commission instituted this investigation on March 18, 2015, based on a complaint filed by Andrea Electronics Corp. of Bohemia, New York (''Andrea''). 80 FR 14159–60 (March 18, 2015). The complaint alleges violations of section 337 of the Tariff Act of 1930, as amended (19 U.S.C. 1337), in the importation, sale for importation, and sale after importation of audio processing articles that infringe five U.S. patents. The notice of investigation named numerous respondents, some of whom have been previously terminated. The notice also named the Office of Unfair Import Investigations as a party.

On July 2, 2015, Conexant Systems Inc. (''Conexant'') moved to obtain intervenor status in the investigation. Conexant argued that, because Andrea alleges that Conexant's audio technology contained in the respondents' products infringes the asserted patents, Conexant has an interest in the subject matter of the investigation. Conexant further argues that the respondents do not adequately represent Conexant's interests because Andrea has accused the audio technology made by multiple companies, so the respondents may not necessarily have an interest in defending Conexant's specific audio technology. On July 14, 2015, Andrea filed a response in opposition to the motion and the Commission Investigative Attorney (''IA'') filed a response in support of the motion.

On July 14, 2015, Waves Audio, Ltd. (''Waves Audio'') moved to obtain intervenor status in the investigation for substantially the same reasons as Conexant. Additionally, Waves Audio argued that it has indemnity obligations to the extent that its products are a part of the investigation. On July 20, 2015, Andrea filed a response in opposition to the motion and the IA filed a response in support of the motion.

On August 7, 2015, the ALJ issued the subject ID, granting intervenor status to Conexant and Waves Audio. The ALJ found that the motions complied with 19 CFR 210.19 and Federal Rule of Civil Procedure 24 because the motions were timely and showed that Conexant and Waves Audio had an interest in the subject matter of the investigation that was not adequately represented by the existing parties. No petitions for review of the subject ID were filed.

The Commission has determined not to review the subject ID.

The authority for the Commission's determination is contained in section 337 of the Tariff Act of 1930, as amended (19 U.S.C. 1337), and in Part 210 of the Commission's Rules of Practice and Procedure (19 CFR part 210).

By order of the Commission.

Issued: September 2, 2015.

Lisa R. Barton,

Secretary to the Commission.

[FR Doc. 2015–22575 Filed 9–4–15; 8:45 am]

BILLING CODE 7020–02–P

INTERNATIONAL TRADE COMMISSION

[Investigation No. 731–TA–130 (Fourth Review)]

Chloropicrin From China

Determination

On the basis of the record [1] developed in the subject five-year review, the United States International Trade Commission (''Commission'') determines, pursuant to the Tariff Act of 1930, that revocation of the antidumping duty order on chloropicrin from China would be likely to lead to continuation or recurrence of material injury to an industry in the United States within a reasonably foreseeable time.

Background

The Commission, pursuant to section 751(c) of the Tariff Act of 1930 (19 U.S.C. 1675(c)), instituted this review on April 1, 2015 (80 FR 17496) and determined on July 6, 2015 that it would conduct an expedited review (80 FR 43461, July 22, 2015).

The Commission made this determination pursuant to section 751(c) of the Tariff Act of 1930 (19 U.S.C. 1675(c)). It completed and filed its determination in this review on August 20, 2015. The views of the Commission are contained in USITC Publication 4561 (August 2015), entitled *Chloropicrin from China: Investigation No. 731–TA–130 (Fourth Review).*

By order of the Commission.

Issued: September 1, 2015.

Lisa R. Barton,

Secretary to the Commission.

[FR Doc. 2015–22061 Filed 9–4–15; 8:45 am]

BILLING CODE 7020–02–P

[1] The record is defined in sec. 207.2(f) of the Commission's Rules of Practice and Procedure (19 CFR 207.2(f)).

INTERNATIONAL TRADE COMMISSION

[Investigation No. 731–TA–1070A (Second Review)]

Crepe Paper From China

Determination

On the basis of the record[1] developed in the subject five-year review, the United States International Trade Commission (''Commission'') determines, pursuant to the Tariff Act of 1930, that revocation of the antidumping duty order on crepe paper from China would be likely to lead to continuation or recurrence of material injury to an industry in the United States within a reasonably foreseeable time.

Background

The Commission, pursuant to section 751(c) of the Tariff Act of 1930 (19 U.S.C. 1675(c)), instituted this review on April 1, 2015 (80 FR 17499) and determined on July 6, 2015 that it would conduct an expedited review (80 FR 43118, July 21, 2015).[2]

The Commission made this determination pursuant to section 751(c) of the Tariff Act of 1930 (19 U.S.C. 1675(c)). It completed and filed its determination in this review on August 31, 2015. The views of the Commission are contained in USITC Publication 4560 (August 2015), entitled *Crepe Paper from China: Investigation No. 731–TA–1070A (Second Review).*

By order of the Commission.

Issued: September 1, 2015.

Lisa R. Barton,

Secretary to the Commission.

[FR Doc. 2015–22056 Filed 9–4–15; 8:45 am]

BILLING CODE 7020–02–P

[1] The record is defined in sec. 207.2(f) of the Commission's Rules of Practice and Procedure (19 CFR 207.2(f)).

[2] Chairman Broadbent and Commissioner Kieff concluded that the respondent group response was inadequate, but that the circumstances warranted a full review.

INTERNATIONAL TRADE COMMISSION

[Investigation No. 337–TA–960]

Certain Toner Supply Containers and Components Thereof; Commission Determination Not To Review an Initial Determination Terminating the Investigation Based Upon a Consent Order Stipulation and Consent Order; Issuance of a Consent Order; Termination of the Investigation

AGENCY: U.S. International Trade Commission.

ACTION: Notice.

SUMMARY: Notice is hereby given that the U.S. International Trade Commission has determined not to review an initial determination (''ID'') (Order No. 4) of the presiding administrative law judge (''ALJ'') terminating the above-captioned investigation based upon a consent order stipulation and consent order. The Commission has also determined to issue a consent order.

FOR FURTHER INFORMATION CONTACT: Robert Needham, Office of the General Counsel, U.S. International Trade Commission, 500 E Street SW., Washington, DC 20436, telephone (202) 708–5468. Copies of non-confidential documents filed in connection with this investigation are or will be available for inspection during official business hours (8:45 a.m. to 5:15 p.m.) in the Office of the Secretary, U.S. International Trade Commission, 500 E Street SW., Washington, DC 20436, telephone (202) 205–2000. General information concerning the Commission may also be obtained by accessing its Internet server at *http://www.usitc.gov.* The public record for this investigation may be viewed on the Commission's electronic docket (EDIS) at *http://edis.usitc.gov.* Hearing-impaired persons are advised that information on this matter can be obtained by contacting the Commission's TDD terminal on (202) 205–1810.

SUPPLEMENTARY INFORMATION: The Commission instituted this investigation on July 16, 2015, based on a complaint filed by Canon Inc. of Tokyo, Japan; Canon U.S.A., Inc. of Melville, New York; and Canon Virginia, Inc. of Newport News, Virginia (together, ''Canon''). 80 FR 42119–20. The complaint alleges that respondents General Plastic Industrial Co., Ltd. of Wu-Chi Town, Taiwan, and Color Imaging, Inc., of Norcross, Georgia (together, ''Respondents''), are in violation of section 337 of the Tariff Act of 1930, as amended, 19 U.S.C. 1337, by reason of infringement of certain claims of U.S. Patent Nos. 8,909,094 and 9,046,820. *Id.* The Office of Unfair Import Investigations is not a party to the investigation. *Id.* at 42120.

On August 4, 2015, Respondents filed an unopposed motion to terminate the investigation based upon a consent order stipulation and proposed consent order. The ALJ granted the motion that same day. He found that the motion for termination by consent order stipulation complies with the requirements of Commission Rule 210.21(c), 19 CFR 210.21(c). He further found, pursuant to Commission Rule 210.50(b)(2), that termination of the investigation would not be contrary to the public interest. No petitions for review of the ID were received.

The Commission has determined not to review the ID and to issue a consent order. The investigation is terminated in its entirety.

The authority for the Commission's determination is contained in section 337 of the Tariff Act of 1930, as amended, 19 U.S.C. 1337, and in part 210 of the Commission's Rules of Practice and Procedure, 19 CFR part 210.

By order of the Commission.

Issued: September 2, 2015.

Lisa R. Barton,

Secretary to the Commission.

[FR Doc. 2015–22526 Filed 9–4–15; 8:45 am]

BILLING CODE 7020–02–P

DEPARTMENT OF JUSTICE

Agency Information Collection Activities; Proposed eCollection; eComments Requested; Request for Recognition of a Non-profit Religious, Charitable, Social Service, or Similar Organization (Form EOIR–31)

AGENCY: Executive Office for Immigration Review, Department of Justice.

ACTION: 30-day notice.

SUMMARY: The Department of Justice (DOJ), Executive Office for Immigration Review, will be submitting the following information collection request to the Office of Management and Budget (OMB) for review and approval in accordance with the Paperwork Reduction Act of 1995. This proposed information collection was previously published in the **Federal Register** at 80 FR 38233, on July 2, 2015, allowing for a 60 day comment period.

DATES: Comments are encouraged and will be accepted for an additional 30 days until October 8, 2015.

FOR FURTHER INFORMATION CONTACT: If you have additional comments especially on the estimated public burden or associated response time, suggestions, or need a copy of the proposed information collection instrument with instructions or additional information, please contact Charles Adkins-Blanch, Acting General Counsel, Executive Office for Immigration Review, U.S. Department of Justice, Suite 2600, 5107 Leesburg Pike, Falls Church, Virginia 22041; telephone: (703) 305–0470. Written comments and/or suggestions can also be directed to the Office of Management and Budget, Office of Information and Regulatory Affairs, Attention Department of Justice Desk Officer, Washington, DC 20530 or sent to *OIRA_submissions@omb.eop.gov.*

SUPPLEMENTARY INFORMATION: Written comments and suggestions from the public and affected agencies concerning the proposed collection of information are encouraged. Your comments should address one or more of the following four points:

— Evaluate whether the proposed collection of information is necessary for the proper performance of the functions of the agency, including whether the information will have practical utility;

— Evaluate the accuracy of the agency's estimate of the burden of the proposed collection of information, including the validity of the methodology and assumptions used;

— Enhance the quality, utility, and clarity of the information to be collected; and/or

— Minimize the burden of the collection of information on those who are to respond, including through the use of appropriate automated, electronic, mechanical, or other technological collection techniques or other forms of information technology, *e.g.,* permitting electronic submission of responses.

Overview of This Information Collection

1 *Type of Information Collection:* Extension of a Currently Approved Collection.

2 *The Title of the Form/Collection:* Request for Recognition of a Non-profit Religious, Charitable, Social Service, or Similar Organization.

3 *The agency form number, if any, and the applicable component of the Department sponsoring the collection:* Form EOIR–31. The applicable component within the Department of Justice is the Board of Immigration

Appeals, Executive Office for Immigration Review.

4 *Affected public who will be asked or required to respond, as well as a brief abstract:* Non-profit organizations seeking to be recognized as legal service providers by the Board of Immigration Appeals (Board) of the Executive Office for Immigration Review (EOIR). Abstract: This information collection is necessary to determine whether the organization meets the regulatory and relevant case law requirements for recognition by the Board as a legal service provider, which then would allow its designated representative or representatives to seek full or partial accreditation to practice before EOIR and/or the Department of Homeland Security.

5 *An estimate of the total number of respondents and the amount of time estimated for an average respondent to respond:* It is estimated that 128 respondents will complete the form annually with an average of 2 hours per response.

6 *An estimate of the total public burden (in hours) associated with the collection:* There are an estimated 256 total annual burden hours associated with this collection.

If additional information is required contact: Jerri Murray, Department Clearance Officer, United States Department of Justice, Justice Management Division, Policy and Planning Staff, Two Constitution Square, 145 N Street NE., 3E.405B, Washington, DC 20530.

Dated: September 1, 2015.

Jerri Murray,

Department Clearance Officer for PRA, U.S. Department of Justice.

[FR Doc. 2015–22052 Filed 9–4–15; 8:45 am]

BILLING CODE 4410–30–P

DEPARTMENT OF JUSTICE

Notice of Lodging of Proposed Consent Decree Under the Comprehensive Environmental Response, Compensation, and Liability Act

On September 1, 2015, the Department of Justice lodged a proposed consent decree with the United States District Court for the District of Maine in the lawsuit entitled *United States and State of Maine* v. *Maine Mack, Inc., et al.,* Civil No.: 1:15–00358–NT.

In this action the United States sought recovery, pursuant to the Comprehensive Environmental Response, Compensation, and Liability Act (''CERCLA''), 42 U.S.C. 9601 *et seq.,* of response costs regarding the Hows Corner Superfund Site in Plymouth, Maine (''Site''). The settlement requires two parties to pay $98,409 into a trust account that was established to help fund the cleanup at the Site. The settlement resolves the United States' and the State's claims against these defendants regarding the Site.

The publication of this notice opens a period for public comment on the proposed consent decree. Comments should be addressed to the Assistant Attorney General, Environment and Natural Resources Division, and should refer to *United States and State of Maine* v. *Maine Mack, Inc., et al.,* Civ. No. 1:15–00358, D.J. Ref. No. 90–11–3–1733/11. All comments must be submitted no later than thirty (30) days after the publication date of this notice. Comments may be submitted either by email or by mail:

To submit comments:	*Send them to:*
By e-mail	*pubcomment-ees.enrd@usdoj.gov.*
By mail	Assistant Attorney General, U.S. DOJ—ENRD, P.O. Box 7611, Washington, DC 20044–7611.

During the public comment period, the proposed consent decree may be examined and downloaded at this Justice Department Web site: *http://www.justice.gov/enrd/consent-decrees.* We will provide a paper copy of the proposed consent decree upon written request and payment of reproduction costs. Please mail your request and payment to: Consent Decree Library, U.S. DOJ—ENRD, P.O. Box 7611, Washington, DC 20044–7611.

Please enclose a check or money order for $4.00 (25 cents per page reproduction cost) payable to the United States Treasury.

Robert E. Maher Jr.,

Assistant Section Chief, Environmental Enforcement Section, Environment and Natural Resources Division.

[FR Doc. 2015–22520 Filed 9–4–15; 8:45 am]

BILLING CODE 4410–15–P

DEPARTMENT OF JUSTICE

Notice of Lodging of Proposed Consent Decree Under the Clean Air Act, Clean Water Act, Resource Conservation and Recovery Act, Toxic Substances Control Act, and Emergency Planning and Community Right-To-Know Act

On September 1, 2015, the Department of Justice lodged a proposed Consent Decree with the United States District Court for the Northern District of Alabama in the lawsuit entitled *United States and the Alabama Department of Environmental Management* v. *McWane, Inc.,* Civil Action No. cv–15–JHE–1504–S.

In this action, the United States seeks civil penalties for violations of the Clean Air Act, Clean Water Act, Resource Conservation and Recovery Act, Toxic Substances Control Act, and the reporting requirements of the Emergency Planning and Community Right-to-Know Act, together with their implementing regulations and permits, at two of McWane's facilities, one in Birmingham, Alabama and one in Phillipsburg, New Jersey. McWane is a national company that operates iron foundries, brass foundries, and various valve and tank manufacturing facilities. The Alabama Department of Environmental Management is a co-plaintiff in this action.

Under the proposed Consent Decree, McWane will pay a total civil penalty of $471,031, of which $341,383 will go to the United States Treasury, $2,782 to the Oil Spill Liability Trust Fund to resolve alleged violations relating to its spill prevention program, and $126,866 to the State of Alabama. McWane will also implement a Supplemental Environmental Project, at an estimated cost of $2,500,000. McWane has already undertaken corrective measures to resolve all historical violations alleged in the Complaint, at an estimated cost of over $10 million. The proposed Consent Decree resolves only the specific violations alleged in the Complaint.

The publication of this notice opens a period for public comment on the Consent Decree. Comments should be addressed to the Assistant Attorney General, Environment and Natural Resources Division, and should refer to *United States and the Alabama Department of Environmental Protection* v. *McWane, Inc.,* D.J. Ref. No. 90–5–1–1–08282/5. All comments must be submitted no later than thirty (30) days after the publication date of this notice. Comments may be submitted either by email or by mail:

To submit comments:	*Send them to:*
By email	*pubcomment-ees.enrd@usdoj.gov.*
By mail	Assistant Attorney General, U.S. DOJ—ENRD, P.O. Box 7611, Washington, DC 20044–7611.

During the public comment period, the Consent Decree may be examined and downloaded at this Justice

Department Web site: *http://www.justice.gov/enrd/consent-decrees.* We will provide a paper copy of the Consent Decree upon written request and payment of reproduction costs. Please mail your request and payment to: Consent Decree Library, U.S. DOJ—ENRD, P.O. Box 7611, Washington, DC 20044–7611.

Please enclose a check or money order for $12.25 (25 cents per page reproduction cost) payable to the United States Treasury.

Randall M. Stone,

Acting Assistant Section Chief, Environmental Enforcement Section, Environment and Natural Resources Division.

[FR Doc. 2015–22531 Filed 9–4–15; 8:45 am]

BILLING CODE 4410–15–P

DEPARTMENT OF JUSTICE

[OMB Number 1103–NEW]

Agency Information Collection Activities; Proposed eCollection eComments Requested; Acquisition 360 Survey

AGENCY: Department of Justice.

ACTION: 60-day notice.

SUMMARY: The Department of Justice (DOJ) will submit the following information collection request to the Office of Management and Budget (OMB) for review and approval in accordance with the Paperwork Reduction Act of 1995.

DATES: Comments are encouraged and will be accepted for 60 days until November 9, 2015.

FOR FURTHER INFORMATION CONTACT: If you have additional comments especially on the estimated public burden or associated response time, suggestions, or need a copy of the proposed information collection instrument with instructions or additional information, please contact Mr. Neil Ryder, Director—Internal Review and Evaluation Office, United States Department of Justice, Justice Management Division, Two Constitution Square, 145 N Street NE., Room 8W–222, Washington, DC 20530.

SUPPLEMENTARY INFORMATION: Written comments and suggestions from the public and affected agencies concerning the proposed collection of information are encouraged. Your comments should address one or more of the following four points:

- Evaluate whether the proposed collection of information is necessary for the proper performance of the functions of the agency, including whether the information will have practical utility;
- Evaluate the accuracy of the agency's estimate of the burden of the proposed collection of information, including the validity of the methodology and assumptions used;
- Evaluate whether and if so how the quality, utility, and clarity of the information to be collected can be enhanced; and
- Minimize the burden of the collection of information on those who are to respond, including through the use of appropriate automated, electronic, mechanical, or other technological collection techniques or other forms of information technology, *e.g.,* permitting electronic submission of responses.

Overview of This Information Collection

1. *Type of Information Collection:* New Collection.
2. *The Title of the Form/Collection:* Acquisition 360 Survey.
3. *The agency form number, if any, and the applicable component of the Department sponsoring the collection:*
Form number: None.
Component: Department of Justice, Justice Management Division.
4. *Affected public who will be asked or required to respond, as well as a brief abstract:*
Primary: Business or other for-profit.
Other: Not-for-profit institutions and Federal Government stakeholders.
Abstract: The Department of Justice (DOJ) Senior Procurement Executive will use the information to help identify DOJ acquisition process improvements and increase customer satisfaction.
5. *An estimate of the total number of respondents and the amount of time estimated for an average respondent to respond:* An estimated 450 respondents will take 20 minutes to complete the survey.
6. *An estimate of the total public burden (in hours) associated with the collection:* The estimated annual public burden associated with this collection is 150 hours.

If additional information is required contact: Jerri Murray, Department Clearance Officer, United States Department of Justice, Justice Management Division, Policy and Planning Staff, Two Constitution Square, 145 N Street NE., Room 3E–405B, Washington, DC 20530.

Dated: September 2, 2015.

Jerri Murray,

Department Clearance Officer for PRA, U.S. Department of Justice.

[FR Doc. 2015–22523 Filed 9–4–15; 8:45 am]

BILLING CODE 4410–ML–P

NATIONAL AERONAUTICS AND SPACE ADMINISTRATION

[Notice: (15–076)]

Notice of Information Collection

AGENCY: National Aeronautics and Space Administration (NASA).

ACTION: Notice of information collection.

SUMMARY: The National Aeronautics and Space Administration, as part of its continuing effort to reduce paperwork and respondent burden, invites the general public and other Federal agencies to take this opportunity to comment on proposed and/or continuing information collections, as required by the Paperwork Reduction Act of 1995 (Pub. L. 104–13, 44 U.S.C. 3506(c)(2)(A)).

DATES: All comments should be submitted within 60 calendar days from the date of this publication.

ADDRESSES: All comments should be addressed to Ms. Frances Teel, JF000, National Aeronautics and Space Administration, Washington, DC 20546–0001.

FOR FURTHER INFORMATION CONTACT: Requests for additional information or copies of the information collection instrument(s) and instructions should be directed to Frances Teel, NASA Clearance Officer, NASA Headquarters, 300 E Street SW., JF0000, Washington, DC 20546, *Frances.C.Teel@nasa.gov.*

SUPPLEMENTARY INFORMATION:

I. Abstract

To ensure accurate reporting of Government-owned, contractor-held property on the financial statements and to provide information necessary for effective property management in accordance with FAR Part 45, NASA obtains summary data annually from the official Government property records maintained by its contractors. The information is submitted via the NASA Form 1018, at the end of each fiscal year.

II. Method of Collection

Electronic.

III. Data

Title: NASA Property in the Custody of Contractors.
OMB Number: 2700–0017.
Type of review: Revision of currently approved collection.
Affected Public: Business or other for-profit and not-for-profit institutions.
Estimated Number of Respondents: 661.
Estimated Time per Response: 4 hrs.
Estimated Total Annual Burden Hours: 2644.

Estimated Total Annual Cost: $0.00.

IV. Request for Comments

Comments are invited on: (1) Whether the proposed collection of information is necessary for the proper performance of the functions of NASA, including whether the information collected has practical utility; (2) the accuracy of NASA's estimate of the burden (including hours and cost) of the proposed collection of information; (3) ways to enhance the quality, utility, and clarity of the information to be collected; and (4) ways to minimize the burden of the collection of information on respondents, including automated collection techniques or the use of other forms of information technology.

Comments submitted in response to this notice will be summarized and included in the request for OMB approval of this information collection. They will also become a matter of public record.

Frances Teel,

NASA PRA Clearance Officer.

[FR Doc. 2015–22512 Filed 9–4–15; 8:45 am]

BILLING CODE 7510–13–P

NUCLEAR REGULATORY COMMISSION

[Docket Nos. 50–382; NRC– 2015–0205]

Entergy Operations, Inc.; Waterford Steam Electric Station, Unit 3

AGENCY: Nuclear Regulatory Commission.

ACTION: License amendment application; opportunity to comment, request a hearing, and petition for leave to intervene; order.

SUMMARY: The U.S. Nuclear Regulatory Commission (NRC) is considering issuance of an amendment to Facility Operating License No. NPF–038, issued to Entergy Operations, Inc. (the licensee), for operation of the Waterford Steam Electric Station, Unit 3. The proposed amendment will modify Technical Specification (TS) 3.1.3.4, ''Control Element Assembly [CEA] Drop Time,'' and the Final Safety Analysis Report (FSAR), Chapter 15, ''Accident Analyses.'' Specifically, the amendment would change TS 3.1.3.4 to revise the arithmetic average of all CEA drop times to be less than or equal to 3.5 seconds.

DATES: Submit comments by October 8, 2015. Requests for a hearing or petition for leave to intervene must be filed by November 9, 2015.

ADDRESSES: You may submit comments by any of the following methods (unless this document describes a different method for submitting comments on a specific subject):

- Federal Rulemaking Web site: Go to *http://www.regulations.gov* and search for Docket ID NRC–2015–0205. Address questions about NRC dockets to Carol Gallagher; telephone: 301–415–3463; email: *Carol.Gallagher@nrc.gov.* For technical questions, contact the individual listed in the **FOR FURTHER INFORMATION CONTACT** section of this document.
- Mail comments to: Cindy Bladey, Office of Administration, Mail Stop: OWFN–12–H08, U.S. Nuclear Regulatory Commission, Washington, DC 20555–0001.

For additional direction on obtaining information and submitting comments, see ''Obtaining Information and Submitting Comments'' in the **SUPPLEMENTARY INFORMATION** section of this document.

FOR FURTHER INFORMATION CONTACT: Michael D. Orenak, Office of Nuclear Reactor Regulation, U.S. Nuclear Regulatory Commission, Washington DC 20555–0001; telephone: 301–415–3229, email: *Michael.Orenak@NRC.gov.*

SUPPLEMENTARY INFORMATION:

I. Obtaining Information and Submitting Comments

A. Obtaining Information

Please refer to Docket ID NRC–2015–0205 when contacting the NRC about the availability of information for this action. You may obtain publicly-available information related to this action by any of the following methods:

- Federal Rulemaking Web site: Go to *http://www.regulations.gov* and search for Docket ID NRC–2015–0205.
- NRC's Agencywide Documents Access and Management System (ADAMS): You may obtain publicly-available documents online in the ADAMS Public Documents collection at *http://www.nrc.gov/reading-rm/adams.html.* To begin the search, select ''*ADAMS Public Documents''* and then select ''*Begin Web-based ADAMS Search.''* For problems with ADAMS, please contact the NRC's Public Document Room (PDR) reference staff at 1–800–397–4209, 301–415–4737, or by email to *pdr.resource@nrc.gov.* The ADAMS accession number for each document referenced (if it is available in ADAMS) is provided the first time that it is mentioned in the **SUPPLEMENTARY INFORMATION** section.
- NRC's PDR: You may examine and purchase copies of public documents at the NRC's PDR, Room O1–F21, One White Flint North, 11555 Rockville Pike, Rockville, Maryland 20852.

B. Submitting Comments

Please include Docket ID NRC–2015–0205 in your comment submission.

The NRC cautions you not to include identifying or contact information that you do not want to be publicly disclosed in your comment submission. The NRC will post all comment submissions at *http://www.regulations.gov* as well as enter the comment submissions into ADAMS. The NRC does not routinely edit comment submissions to remove identifying or contact information.

If you are requesting or aggregating comments from other persons for submission to the NRC, then you should inform those persons not to include identifying or contact information that they do not want to be publicly disclosed in their comment submission. Your request should state that the NRC does not routinely edit comment submissions to remove such information before making the comment submissions available to the public or entering the comment into ADAMS.

II. Introduction

The NRC is considering issuance of an amendment to Facility Operating License No. NPF–38, issued to Entergy Operations, Inc., for operation of the Waterford Steam Electric Station, Unit 3, located in St. Charles County, Louisiana.

By letter dated July 2, 2015 (ADAMS Accession No. ML15197A106), as supplemented by letter dated August 14, 2015 (ADAMS Accession No. ML15226A346), the licensee submitted an application for a license amendment request. The proposed amendment would change TS 3.1.3.4 to revise the arithmetic average of all CEA drop times to be less than or equal to 3.5 seconds.

Before any issuance of the proposed license amendment, the NRC will need to make the findings required by the Atomic Energy Act of 1954, as amended (the Act), and NRC's regulations.

The NRC has made a proposed determination that the license amendment request involves no significant hazards consideration. Under the NRC's regulations in § 50.92 of Title 10 of the *Code of Federal Regulations* (10 CFR), this means that operation of the facility in accordance with the proposed amendment would not (1) involve a significant increase in the probability or consequences of an accident previously evaluated; or (2) create the possibility of a new or different kind of accident from any accident previously evaluated; or (3) involve a significant reduction in a margin of safety. As required by 10 CFR

50.91(a), the licensee has provided its analysis of the issue of no significant hazards consideration, which is presented below:

1. Does the proposed change involve a significant increase in the probability or consequences of an accident previously evaluated?

Response: No.

The proposed change increases the TS 3.1.3.4 average and individual CEA drop time limits. The CEA drop time is required to be verified prior to Modes 1 or 2 of plant operations. The probability of an accident previously evaluated remains unchanged since the CEAs drop into the core as a result of an accident or transient condition, and the fact that the CEA drop time was increased does not in itself initiate an accident.

The proposed change to the CEA drop time requirements have been evaluated for impact on the accident analyses. The accident analyses all remain within the regulatory acceptance criteria.

Therefore, the proposed change does not involve a significant increase in the probability or consequences of an accident previously evaluated.

2. Does the proposed change create the possibility of a new or different kind of accident from any accident previously evaluated?

Response: No.

The proposed change increases the TS 3.1.3.4 average and individual CEA drop time limits. The proposed change does not involve a physical alteration of the plant (no new or different type of equipment will be installed) or a change in the methods governing plant operations. The proposed change will not introduce new failure modes or effects and will not, in the absence of other unrelated failures, lead to an accident whose consequences exceed the consequences of accidents previously analyzed.

Therefore, the proposed change does not create the possibility of a new or different kind of accident from any accident previously evaluated.

3. Does the proposed change involve a significant reduction in a margin of safety?

Response: No.

The increase in CEA drop time as proposed in this TS 3.1.3.4 change has been determined to have no significant impact on the accident analyses described in the FSAR which means this change does not have a significant reduction on the existing margins of safety for the fuel, the fuel cladding, the reactor coolant system boundary, or the containment building. The change in CEA drop time does not impact the fuel rod design or mechanical design analysis. The slightly slower drop time would produce a smaller impact on the fuel assembly and lower stresses on the CEAs. The accident analysis consequences became slightly more adverse but all remained within the regulatory acceptance limits, thus this change does not involve a significant reduction in a margin of safety.

The NRC staff has reviewed the licensee's analysis and, based on this review, it appears that the three standards of 10 CFR 50.92(c) are satisfied. Therefore, the NRC staff proposes to determine that the license amendment request involves a No Significant Hazards Consideration.

The NRC is seeking public comments on this proposed determination that the license amendment request involves no significant hazards consideration. Any comments received within 30 days after the date of publication of this notice will be considered in making any final determination.

Normally, the Commission will not issue the amendment until the expiration of 60 days after the date of publication of this notice. The Commission may issue the license amendment before expiration of the 60-day notice period if the Commission concludes the amendment involves no significant hazards consideration. In addition, the Commission may issue the amendment prior to the expiration of the 30-day comment period should circumstances change during the 30-day comment period such that failure to act in a timely way would result, for example, in derating or shutdown of the facility. Should the Commission take action prior to the expiration of either the comment period or the notice period, it will publish in the **Federal Register** a notice of issuance. Should the Commission make a final No Significant Hazards Consideration Determination, any hearing will take place after issuance. The Commission expects that the need to take this action will occur very infrequently.

III. Opportunity To Request a Hearing and Petition for Leave To Intervene

Within 60 days after the date of publication of this **Federal Register** notice, any person whose interest may be affected by this proceeding and who desires to participate as a party in the proceeding must file a written request for hearing or a petition for leave to intervene specifying the contentions which the person seeks to have litigated in the hearing with respect to the license amendment request. Requests for hearing and petitions for leave to intervene shall be filed in accordance with the NRC's ''Agency Rules of Practice and Procedure'' in 10 CFR part 2. Interested person(s) should consult a current copy of 10 CFR 2.309, which is available at the NRC's PDR. The NRC's regulations are accessible electronically from the NRC Library on the NRC's Web site at *http://www.nrc.gov/reading-rm/doc-collections/cfr/*.

As required by 10 CFR 2.309, a request for hearing or petition for leave to intervene must set forth with particularity the interest of the petitioner in the proceeding and how that interest may be affected by the results of the proceeding. The hearing request or petition must specifically explain the reasons why intervention should be permitted, with particular reference to the following general requirements: (1) The name, address, and telephone number of the requestor or petitioner; (2) the nature of the requestor's/petitioner's right under the Act to be made a party to the proceeding; (3) the nature and extent of the requestor's/petitioner's property, financial, or other interest in the proceeding; and (4) the possible effect of any decision or order which may be entered in the proceeding on the requestor's/petitioner's interest. The hearing request or petition must also include the specific contentions that the requestor/petitioner seeks to have litigated at the proceeding.

For each contention, the requestor/petitioner must provide a specific statement of the issue of law or fact to be raised or controverted, as well as a brief explanation of the basis for the contention. Additionally, the requestor/petitioner must demonstrate that the issue raised by each contention is within the scope of the proceeding and is material to the findings that the NRC must make to support the granting of a license amendment in response to the application. The hearing request or petition must also include a concise statement of the alleged facts or expert opinion that support the contention and on which the requestor/petitioner intends to rely at the hearing, together with references to those specific sources and documents. The hearing request or petition must provide sufficient information to show that a genuine dispute exists with the applicant on a material issue of law or fact, including references to specific portions of the application for amendment that the petitioner disputes and the supporting reasons for each dispute. If the requestor/petitioner believes that the application for amendment fails to contain information on a relevant matter as required by law, the requestor/petitioner must identify each failure and the supporting reasons for the requestor's/petitioner's belief. Each contention must be one which, if proven, would entitle the requestor/petitioner to relief. A requestor/petitioner who does not satisfy these requirements for at least one contention will not be permitted to participate as a party.

Those permitted to intervene become parties to the proceeding, subject to any limitations in the order granting leave to intervene, and have the opportunity to participate fully in the conduct of the

hearing with respect to resolution of that person's admitted contentions, including the opportunity to present evidence and to submit a cross-examination plan for cross-examination of witnesses, consistent with NRC regulations, policies, and procedures. The Atomic Safety and Licensing Board will set the time and place for any prehearing conferences and evidentiary hearings, and the appropriate notices will be provided.

Hearing requests or petitions for leave to intervene must be filed no later than 60 days from the date of publication of this notice. Requests for hearing, petitions for leave to intervene, and motions for leave to file new or amended contentions that are filed after the 60-day deadline will not be entertained absent a determination by the presiding officer that the filing demonstrates good cause by satisfying the three factors in 10 CFR 2.309(c)(1)(i)–(iii).

If a hearing is requested, the Commission will make a final determination on the issue of no significant hazards consideration. The final determination will serve to decide when the hearing is held. If the final determination is that the amendment request involves no significant hazards consideration, the Commission may issue the amendment and make it immediately effective, notwithstanding the request for a hearing. Any hearing held would take place after issuance of the amendment. If the final determination is that the amendment request involves a significant hazards consideration, then any hearing held would take place before the issuance of any amendment unless the Commission finds an imminent danger to the health or safety of the public, in which case it will issue an appropriate order or rule under 10 CFR part 2.

IV. Electronic Submissions (E-Filing)

All documents filed in NRC adjudicatory proceedings, including a request for hearing, a petition for leave to intervene, any motion or other document filed in the proceeding prior to the submission of a request for hearing or petition to intervene, and documents filed by interested governmental entities participating under 10 CFR 2.315(c), must be filed in accordance with the NRC's E-Filing rule (72 FR 49139; August 28, 2007). The E-Filing process requires participants to submit and serve all adjudicatory documents over the internet, or in some cases to mail copies on electronic storage media. Participants may not submit paper copies of their filings unless they seek an exemption in accordance with the procedures described below.

To comply with the procedural requirements of E-Filing, at least 10 days prior to the filing deadline, the participant should contact the Office of the Secretary by email at *hearing.docket@nrc.gov,* or by telephone at 301–415–1677, to request (1) a digital identification (ID) certificate, which allows the participant (or its counsel or representative) to digitally sign documents and access the E-Submittal server for any proceeding in which it is participating; and (2) advise the Secretary that the participant will be submitting a request or petition for hearing (even in instances in which the participant, or its counsel or representative, already holds an NRC-issued digital ID certificate). Based upon this information, the Secretary will establish an electronic docket for the hearing in this proceeding if the Secretary has not already established an electronic docket.

Information about applying for a digital ID certificate is available on the NRC's public Web site at *http://www.nrc.gov/site-help/e-submittals/getting-started.html.* System requirements for accessing the E-Submittal server are detailed in the NRC's ''Guidance for Electronic Submission,'' which is available on the agency's public Web site at *http://www.nrc.gov/site-help/e-submittals.html.* Participants may attempt to use other software not listed on the Web site, but should note that the NRC's E-Filing system does not support unlisted software, and the NRC Meta System Help Desk will not be able to offer assistance in using unlisted software.

If a participant is electronically submitting a document to the NRC in accordance with the E-Filing rule, the participant must file the document using the NRC's online, Web-based submission form. In order to serve documents through the Electronic Information Exchange System, users will be required to install a Web browser plug-in from the NRC's Web site. Further information on the Web-based submission form, including the installation of the Web browser plug-in, is available on the NRC's public Web site at *http://www.nrc.gov/site-help/e-submittals.html.*

Once a participant has obtained a digital ID certificate and a docket has been created, the participant can then submit a request for hearing or petition for leave to intervene. Submissions should be in Portable Document Format (PDF) in accordance with NRC guidance available on the NRC's public Web site at *http://www.nrc.gov/site-help/e-submittals.html.* A filing is considered complete at the time the documents are submitted through the NRC's E-Filing system. To be timely, an electronic filing must be submitted to the E-Filing system no later than 11:59 p.m. Eastern Time on the due date. Upon receipt of a transmission, the E-Filing system time-stamps the document and sends the submitter an email notice confirming receipt of the document. The E-Filing system also distributes an email notice that provides access to the document to the NRC's Office of the General Counsel and any others who have advised the Office of the Secretary that they wish to participate in the proceeding, so that the filer need not serve the documents on those participants separately. Therefore, applicants and other participants (or their counsel or representative) must apply for and receive a digital ID certificate before a hearing request/petition to intervene is filed so that they can obtain access to the document via the E-Filing system.

A person filing electronically using the NRC's adjudicatory E-Filing system may seek assistance by contacting the NRC Meta System Help Desk through the ''Contact Us'' link located on the NRC's public Web site at *http://www.nrc.gov/site-help/e-submittals.html,* by email to *MSHD.Resource@nrc.gov,* or by a toll-free call at 1–866–672–7640. The NRC Meta System Help Desk is available between 8 a.m. and 8 p.m., Eastern Time, Monday through Friday, excluding government holidays.

Participants who believe that they have a good cause for not submitting documents electronically must file an exemption request, in accordance with 10 CFR 2.302(g), with their initial paper filing requesting authorization to continue to submit documents in paper format. Such filings must be submitted by: (1) First class mail addressed to the Office of the Secretary of the Commission, U.S. Nuclear Regulatory Commission, Washington, DC 20555–0001, Attention: Rulemaking and Adjudications Staff; or (2) courier, express mail, or expedited delivery service to the Office of the Secretary, Sixteenth Floor, One White Flint North, 11555 Rockville Pike, Rockville, Maryland 20852, Attention: Rulemaking and Adjudications Staff. Participants filing a document in this manner are responsible for serving the document on all other participants. Filing is considered complete by first-class mail as of the time of deposit in the mail, or by courier, express mail, or expedited delivery service upon depositing the

document with the provider of the service. A presiding officer, having granted an exemption request from using E-Filing, may require a participant or party to use E-Filing if the presiding officer subsequently determines that the reason for granting the exemption from use of E-Filing no longer exists.

Documents submitted in adjudicatory proceedings will appear in the NRC's electronic hearing docket which is available to the public at *http://ehd1.nrc.gov/ehd/,* unless excluded pursuant to an order of the Commission, or the presiding officer. Participants are requested not to include personal privacy information, such as social security numbers, home addresses, or home phone numbers in their filings, unless an NRC regulation or other law requires submission of such information. However, in some instances, a request to intervene will require including information on local residence in order to demonstrate a proximity assertion of interest in the proceeding. With respect to copyrighted works, except for limited excerpts that serve the purpose of the adjudicatory filings and would constitute a Fair Use application, participants are requested not to include copyrighted materials in their submission.

For further details with respect to this action, see the application for license amendment dated July 2, 2015, and supplement dated August 14, 2015.

Attorney for licensee: Joseph A. Aluise, Associate General Counsel—Nuclear, Entergy Services, Inc., 639 Loyola Avenue, New Orleans, Louisiana 70113.

NRC Branch Chief: Meena K. Khanna.

Order Imposing Procedures for Access to Sensitive Unclassified Non-Safeguards Information for Contention Preparation

A. This Order contains instructions regarding how potential parties to this proceeding may request access to documents containing SUNSI.

B. Within 10 days after publication of this notice of hearing and opportunity to petition for leave to intervene, any potential party who believes access to SUNSI is necessary to respond to this notice may request such access. A ''potential party'' is any person who intends to participate as a party by demonstrating standing and filing an admissible contention under 10 CFR 2.309. Requests for access to SUNSI submitted later than 10 days after publication of this notice will not be considered absent a showing of good cause for the late filing, addressing why the request could not have been filed earlier.

C. The requester shall submit a letter requesting permission to access SUNSI to the Office of the Secretary, U.S. Nuclear Regulatory Commission, Washington, DC 20555–0001, Attention: Rulemakings and Adjudications Staff, and provide a copy to the Associate General Counsel for Hearings, Enforcement and Administration, Office of the General Counsel, Washington, DC 20555–0001. The expedited delivery or courier mail address for both offices is: U.S. Nuclear Regulatory Commission, 11555 Rockville Pike, Rockville, Maryland 20852. The email address for the Office of the Secretary and the Office of the General Counsel are *Hearing.Docket@nrc.gov* and *OGCmailcenter@nrc.gov,* respectively.[1] The request must include the following information:

(1) A description of the licensing action with a citation to this **Federal Register** notice;

(2) The name and address of the potential party and a description of the potential party's particularized interest that could be harmed by the action identified in C.(1); and

(3) The identity of the individual or entity requesting access to SUNSI and the requester's basis for the need for the information in order to meaningfully participate in this adjudicatory proceeding. In particular, the request must explain why publicly-available versions of the information requested would not be sufficient to provide the basis and specificity for a proffered contention.

D. Based on an evaluation of the information submitted under paragraph C.(3) the NRC staff will determine within 10 days of receipt of the request whether:

(1) There is a reasonable basis to believe the petitioner is likely to establish standing to participate in this NRC proceeding; and

(2) The requestor has established a legitimate need for access to SUNSI.

E. If the NRC staff determines that the requestor satisfies both D.(1) and D.(2) above, the NRC staff will notify the requestor in writing that access to SUNSI has been granted. The written notification will contain instructions on how the requestor may obtain copies of the requested documents, and any other conditions that may apply to access to those documents. These conditions may include, but are not limited to, the signing of a Non-Disclosure Agreement or Affidavit, or Protective Order[2] setting forth terms and conditions to prevent the unauthorized or inadvertent disclosure of SUNSI by each individual who will be granted access to SUNSI.

F. Filing of Contentions. Any contentions in these proceedings that are based upon the information received as a result of the request made for SUNSI must be filed by the requestor no later than 25 days after the requestor is granted access to that information. However, if more than 25 days remain between the date the petitioner is granted access to the information and the deadline for filing all other contentions (as established in the notice of hearing or opportunity for hearing), the petitioner may file its SUNSI contentions by that later deadline. This provision does not extend the time for filing a request for a hearing and petition to intervene, which must comply with the requirements of 10 CFR 2.309.

G. Review of Denials of Access.

(1) If the request for access to SUNSI is denied by the NRC staff after a determination on standing and need for access, the NRC staff shall immediately notify the requestor in writing, briefly stating the reason or reasons for the denial.

(2) The requester may challenge the NRC staff's adverse determination by filing a challenge within 5 days of receipt of that determination with: (a) The presiding officer designated in this proceeding; (b) if no presiding officer has been appointed, the Chief Administrative Judge, or if he or she is unavailable, another administrative judge, or an administrative law judge with jurisdiction pursuant to 10 CFR 2.318(a); or (c) officer if that officer has been designated to rule on information access issues.

H. Review of Grants of Access. A party other than the requester may challenge an NRC staff determination granting access to SUNSI whose release would harm that party's interest independent of the proceeding. Such a challenge must be filed with the Chief Administrative Judge within 5 days of the notification by the NRC staff of its grant of access.

If challenges to the NRC staff determinations are filed, these procedures give way to the normal process for litigating disputes concerning access to information. The availability of interlocutory review by

[1] While a request for hearing or petition to intervene in this proceeding must comply with the filing requirements of the NRC's ''E-Filing Rule,'' the initial request to access SUNSI under these procedures should be submitted as described in this paragraph.

[2] Any motion for Protective Order or draft Non-Disclosure Affidavit or Agreement for SUNSI must be filed with the presiding officer or the Chief Administrative Judge if the presiding officer has not yet been designated, within 30 days of the deadline for the receipt of the written access request.

the Commission of orders ruling on such NRC staff determinations (whether granting or denying access) is governed by 10 CFR 2.311.[3]

I. The Commission expects that the NRC staff and presiding officers (and any other reviewing officers) will consider and resolve requests for access to SUNSI, and motions for protective orders, in a timely fashion in order to minimize any unnecessary delays in identifying those petitioners who have standing and who have propounded contentions meeting the specificity and basis requirements in 10 CFR part 2. Attachment 1 to this Order summarizes the general target schedule for processing and resolving requests under these procedures.

It is so ordered.

Dated at Rockville, Maryland, this 1 day of September, 2015.

For the Nuclear Regulatory Commission.

Rochelle C. Bavol,

Acting, Secretary of the Commission.

ATTACHMENT 1—GENERAL TARGET SCHEDULE FOR PROCESSING AND RESOLVING REQUESTS FOR ACCESS TO SENSITIVE UNCLASSIFIED NON-SAFEGUARDS INFORMATION IN THIS PROCEEDING

Day	Event/activity
0	Publication of **Federal Register** notice of hearing and opportunity to petition for leave to intervene, including order with instructions for access requests.
10	Deadline for submitting requests for access to Sensitive Unclassified Non-Safeguards Information (SUNSI) with information: Supporting the standing of a potential party identified by name and address; describing the need for the information in order for the potential party to participate meaningfully in an adjudicatory proceeding.
60	Deadline for submitting petition for intervention containing: (i) Demonstration of standing; and (ii) all contentions whose formulation does not require access to SUNSI (+25 Answers to petition for intervention; +7 petitioner/requestor reply).
20	U.S. Nuclear Regulatory Commission (NRC) staff informs the requester of the staff's determination whether the request for access provides a reasonable basis to believe standing can be established and shows need for SUNSI. (NRC staff also informs any party to the proceeding whose interest independent of the proceeding would be harmed by the release of the information.) If NRC staff makes the finding of need for SUNSI and likelihood of standing, NRC staff begins document processing (preparation of redactions or review of redacted documents).
25	If NRC staff finds no ''need'' or no likelihood of standing, the deadline for petitioner/requester to file a motion seeking a ruling to reverse the NRC staff's denial of access; NRC staff files copy of access determination with the presiding officer (or Chief Administrative Judge or other designated officer, as appropriate). If NRC staff finds ''need'' for SUNSI, the deadline for any party to the proceeding whose interest independent of the proceeding would be harmed by the release of the information to file a motion seeking a ruling to reverse the NRC staff's grant of access.
30	Deadline for NRC staff reply to motions to reverse NRC staff determination(s).
40	(Receipt +30) If NRC staff finds standing and need for SUNSI, deadline for NRC staff to complete information processing and file motion for Protective Order and draft Non-Disclosure Affidavit. Deadline for applicant/licensee to file Non-Disclosure Agreement for SUNSI.
A	If access granted: issuance of presiding officer or other designated officer decision on motion for protective order for access to sensitive information (including schedule for providing access and submission of contentions) or decision reversing a final adverse determination by the NRC staff.
A + 3	Deadline for filing executed Non-Disclosure Affidavits. Access provided to SUNSI consistent with decision issuing the protective order.
A + 28	Deadline for submission of contentions whose development depends upon access to SUNSI. However, if more than 25 days remain between the petitioner's receipt of (or access to) the information and the deadline for filing all other contentions (as established in the notice of hearing or opportunity for hearing), the petitioner may file its SUNSI contentions by that later deadline.
A + 53	(Contention receipt +25) Answers to contentions whose development depends upon access to SUNSI.
A + 60	(Answer receipt +7) Petitioner/Intervenor reply to answers.
>A + 60	Decision on contention admission.

[3] Requesters should note that the filing requirements of the NRC's E-Filing Rule (72 FR 49139; August 28, 2007) apply to appeals of NRC staff determinations (because they must be served on a presiding officer or the Commission, as applicable), but not to the initial SUNSI request submitted to the NRC staff under these procedures.

[FR Doc. 2015–22553 Filed 9–4–15; 8:45 am]

BILLING CODE 7590–01–P

NUCLEAR REGULATORY COMMISSION

Advisory Committee on the Medical Uses of Isotopes: Meeting Notice

AGENCY: U.S. Nuclear Regulatory Commission.

ACTION: Notice of meeting.

SUMMARY: The U.S. Nuclear Regulatory Commission will convene a teleconference meeting of the Advisory Committee on the Medical Uses of Isotopes (ACMUI) on October 28, 2015, to discuss the ACMUI subcommittee's report on the ACMUI review and comments of Petitions for Rulemaking (PRM)–20–28, 20–29, and 20–30, ''Linear No-Threshold Model and Standards for Protection Against Radiation.'' Meeting information, including a copy of the agenda and handouts, will be available at *http://www.nrc.gov/reading-rm/doc-collections/acmui/meetings/2015.html.* The agenda and handouts may also be obtained by contacting Ms. Sophie Holiday using the information below.

DATES: The teleconference meeting will be held on Wednesday, October 28, 2015, 2:00 p.m. to 4:00 p.m. Eastern Standard Time.

PUBLIC PARTICIPATION: Any member of the public who wishes to participate in the teleconference should contact Ms. Holiday using the contact information below.

FOR FURTHER INFORMATION CONTACT: Ms. Sophie Holiday, email: *sophie.holiday@nrc.gov,* telephone: (404) 997–4691.

Conduct of the Meeting

Dr. Philip Alderson, ACMUI Vice Chairman, will preside over the meeting. Dr. Alderson will conduct the meeting in a manner that will facilitate the orderly conduct of business. The following procedures apply to public participation in the meeting:

1. Persons who wish to provide a written statement should submit an electronic copy to Ms. Holiday at the contact information listed above. All submittals must be received by October 23, 2015, three business days prior to the meeting, and must pertain to the topic on the agenda for the meeting.

2. Questions and comments from members of the public will be permitted during the meetings, at the discretion of the Vice Chairman.

3. The draft transcript and meeting summary will be available on ACMUI's Web site *http://www.nrc.gov/reading-rm/doc-collections/acmui/meetings/2015.html* on or about December 11, 2015.

This meeting will be held in accordance with the Atomic Energy Act of 1954, as amended (primarily section 161a); the Federal Advisory Committee Act (5 U.S.C. App); and the Commission's regulations in title 10 of the *Code of Federal Regulations,* part 7.

Dated at Rockville, Maryland, this 31st day of August, 2015.

For the Nuclear Regulatory Commission.

Andrew L. Bates,

Advisory Committee Management Officer.

[FR Doc. 2015–22552 Filed 9–4–15; 8:45 am]

BILLING CODE 7590–01–P

NUCLEAR REGULATORY COMMISSION

[NRC–2015–0193]

Applications and Amendments to Facility Operating Licenses and Combined Licenses Involving Proposed No Significant Hazards Considerations and Containing Sensitive Unclassified Non-Safeguards Information and Order Imposing Procedures for Access to Sensitive Unclassified Non-Safeguards Information

AGENCY: Nuclear Regulatory Commission.

ACTION: License amendment request; opportunity to comment, request a hearing, and petition for leave to intervene; order.

SUMMARY: The U.S. Nuclear Regulatory Commission (NRC) received and is considering approval of one amendment request. The amendment request is for Vermont Yankee Nuclear Power Station. For this amendment request, the NRC proposes to determine that it involves no significant hazards consideration. In addition, the amendment request contains sensitive unclassified non-safeguards information (SUNSI).

DATES: Comments must be filed by October 8, 2015. A request for a hearing must be filed by November 9, 2015. Any potential party as defined in § 2.4 of Title 10 of the *Code of Federal Regulations* (10 CFR), who believes access to SUNSI is necessary to respond to this notice must request document access by September 18, 2015.

ADDRESSES: You may submit comments by any of the following methods (unless this document describes a different method for submitting comments on a specific subject):

- *Federal Rulemaking Web site:* Go to *http://www.regulations.gov* and search for Docket ID NRC–2015–0193. Address questions about NRC dockets to Carol Gallagher; telephone: 301–415–3463; email: *Carol.Gallagher@nrc.gov.* For technical questions, contact the individual listed in the **FOR FURTHER INFORMATION CONTACT** section of this document.
- *Mail comments to:* Cindy Bladey, Office of Administration, Mail Stop: OWFN–12–H08, U.S. Nuclear Regulatory Commission, Washington, DC 20555–0001.

For additional direction on obtaining information and submitting comments, see ''Obtaining Information and Submitting Comments'' in the **SUPPLEMENTARY INFORMATION** section of this document.

FOR FURTHER INFORMATION CONTACT: Janet Burkhardt, Office of Nuclear Reactor Regulation, U.S. Nuclear Regulatory Commission, Washington DC 20555–0001; telephone: 301–415–1384, email: *Janet.Burkhardt@nrc.gov.*

SUPPLEMENTARY INFORMATION:

I. Obtaining Information and Submitting Comments

A. Obtaining Information

Please refer to Docket ID NRC–2015–0193 when contacting the NRC about the availability of information for this action. You may obtain publicly-available information related to this action by any of the following methods:

- *Federal Rulemaking Web site:* Go to *http://www.regulations.gov* and search for Docket ID NRC–2015–0193.
- *NRC's Agencywide Documents Access and Management System (ADAMS):* You may obtain publicly-available documents online in the ADAMS Public Documents collection at *http://www.nrc.gov/reading-rm/adams.html.* To begin the search, select ''*ADAMS Public Documents''* and then select ''*Begin Web-based ADAMS Search.''* For problems with ADAMS, please contact the NRC's Public Document Room (PDR) reference staff at 1–800–397–4209, 301–415–4737, or by email to *pdr.resource@nrc.gov.* The ADAMS accession number for each document referenced (if it is available in ADAMS) is provided the first time that it is mentioned in the **SUPPLEMENTARY INFORMATION** section.
- *NRC's PDR:* You may examine and purchase copies of public documents at the NRC's PDR, Room O1–F21, One White Flint North, 11555 Rockville Pike, Rockville, Maryland 20852.

B. Submitting Comments

Please include Docket ID NRC–2015–0193, facility name, unit number(s), application date, and subject in your comment submission.

The NRC cautions you not to include identifying or contact information that you do not want to be publicly disclosed in your comment submission. The NRC will post all comment submissions at *http://www.regulations.gov* as well as enter the comment submissions into ADAMS. The NRC does not routinely edit comment submissions to remove identifying or contact information.

If you are requesting or aggregating comments from other persons for submission to the NRC, then you should inform those persons not to include identifying or contact information that they do not want to be publicly disclosed in their comment submission. Your request should state that the NRC does not routinely edit comment submissions to remove such information before making the comment submissions available to the public or entering the comment submissions into ADAMS.

II. Background

Pursuant to Section 189a.(2) of the Atomic Energy Act of 1954, as amended (the Act), the NRC is publishing this notice. The Act requires the Commission to publish notice of any amendments issued, or proposed to be issued and grants the Commission the authority to issue and make immediately effective any amendment to an operating license or combined license, as applicable, upon a determination by the Commission that such amendment involves no significant hazards consideration, notwithstanding the pendency before the Commission of a request for a hearing from any person.

This notice includes notice of an amendment containing SUNSI.

III. Notice of Consideration of Issuance of Amendment to Facility Operating Licenses and Combined Licenses, Proposed No Significant Hazards Consideration Determination, and Opportunity for a Hearing

The Commission has made a proposed determination that the following amendment request involves no significant hazards consideration. Under the Commission's regulations in 10 CFR 50.92, this means that operation of the facility in accordance with the proposed amendment would not (1) involve a significant increase in the probability or consequences of an accident previously evaluated, or (2) create the possibility of a new or different kind of accident from any accident previously evaluated, or (3) involve a significant reduction in a margin of safety. The basis for this proposed determination for the amendment request is shown below.

The Commission is seeking public comments on this proposed determination. Any comments received within 30 days after the date of publication of this notice will be considered in making any final determination.

Normally, the Commission will not issue the amendment until the expiration of 60 days after the date of publication of this notice. The Commission may issue the license amendment before expiration of the 60-day period provided that its final determination is that the amendment involves no significant hazards consideration. In addition, the Commission may issue the amendment prior to the expiration of the 30-day comment period should circumstances change during the 30-day comment period such that failure to act in a timely way would result, for example, in derating or shutdown of the facility. Should the Commission take action prior to the expiration of either the comment period or the notice period, it will publish a notice of issuance in the **Federal Register.** Should the Commission make a final No Significant Hazards Consideration Determination, any hearing will take place after issuance. The Commission expects that the need to take this action will occur very infrequently.

A. Opportunity To Request a Hearing and Petition for Leave To Intervene

Within 60 days after the date of publication of this notice, any person(s) whose interest may be affected by this action may file a request for a hearing and a petition to intervene with respect to issuance of the amendment to the subject facility operating license or combined license. Requests for a hearing and a petition for leave to intervene shall be filed in accordance with the Commission's ''Agency Rules of Practice and Procedure'' in 10 CFR part 2. Interested person(s) should consult a current copy of 10 CFR 2.309, which is available at the NRC's PDR, located at One White Flint North, Room O1–F21, 11555 Rockville Pike (first floor), Rockville, Maryland 20852. The NRC's regulations are accessible electronically from the NRC Library on the NRC's Web site at *http://www.nrc.gov/reading-rm/doc-collections/cfr/.* If a request for a hearing or petition for leave to intervene is filed within 60 days, the Commission or a presiding officer designated by the Commission or by the Chief Administrative Judge of the Atomic Safety and Licensing Board Panel, will rule on the request and/or petition; and the Secretary or the Chief Administrative Judge of the Atomic Safety and Licensing Board will issue a notice of a hearing or an appropriate order.

As required by 10 CFR 2.309, a petition for leave to intervene shall set forth with particularity the interest of the petitioner in the proceeding, and how that interest may be affected by the results of the proceeding. The petition should specifically explain the reasons why intervention should be permitted with particular reference to the following general requirements: (1) The name, address, and telephone number of the requestor or petitioner; (2) the nature of the requestor's/petitioner's right under the Act to be made a party to the proceeding; (3) the nature and extent of the requestor's/petitioner's property, financial, or other interest in the proceeding; and (4) the possible effect of any decision or order which may be entered in the proceeding on the requestor's/petitioner's interest. The petition must also set forth the specific contentions which the requestor/petitioner seeks to have litigated at the proceeding.

Each contention must consist of a specific statement of the issue of law or fact to be raised or controverted. In addition, the requestor/petitioner shall provide a brief explanation of the bases for the contention and a concise statement of the alleged facts or expert opinion which support the contention and on which the requestor/petitioner intends to rely in proving the contention at the hearing. The requestor/petitioner must also provide references to those specific sources and documents of which the petitioner is aware and on which the requestor/petitioner intends to rely to establish those facts or expert opinion. The petition must include sufficient information to show that a genuine dispute exists with the applicant on a material issue of law or fact. Contentions shall be limited to matters within the scope of the amendment under consideration. The contention must be one which, if proven, would entitle the requestor/petitioner to relief. A requestor/petitioner who fails to satisfy these requirements with respect to at least one contention will not be permitted to participate as a party.

Those permitted to intervene become parties to the proceeding, subject to any limitations in the order granting leave to intervene, and have the opportunity to participate fully in the conduct of the hearing.

If a hearing is requested, and the Commission has not made a final determination on the issue of no significant hazards consideration, the Commission will make a final determination on the issue of no significant hazards consideration. The final determination will serve to decide when the hearing is held. If the final determination is that the amendment request involves no significant hazards consideration, the Commission may issue the amendment and make it immediately effective, notwithstanding the request for a hearing. Any hearing held would take place after issuance of the amendment. If the final determination is that the amendment request involves a significant hazards consideration, then any hearing held would take place before the issuance of any amendment unless the Commission finds an imminent danger to the health or safety of the public, in which case it will issue an appropriate order or rule under 10 CFR part 2.

B. Electronic Submissions (E-Filing)

All documents filed in NRC adjudicatory proceedings, including a request for hearing, a petition for leave to intervene, any motion or other document filed in the proceeding prior to the submission of a request for hearing or petition to intervene, and documents filed by interested governmental entities participating under 10 CFR 2.315(c), must be filed in accordance with the NRC's E-Filing rule (72 FR 49139; August 28, 2007). The E-Filing process requires participants to submit and serve all adjudicatory documents over the internet, or in some cases to mail copies on electronic storage media. Participants may not submit paper copies of their filings unless they seek an exemption in

accordance with the procedures described below.

To comply with the procedural requirements of E-Filing, at least 10 days prior to the filing deadline, the participant should contact the Office of the Secretary by email at *hearing.docket@nrc.gov,* or by telephone at 301–415–1677, to request (1) a digital identification (ID) certificate, which allows the participant (or its counsel or representative) to digitally sign documents and access the E-Submittal server for any proceeding in which it is participating; and (2) advise the Secretary that the participant will be submitting a request or petition for hearing (even in instances in which the participant, or its counsel or representative, already holds an NRC-issued digital ID certificate). Based upon this information, the Secretary will establish an electronic docket for the hearing in this proceeding if the Secretary has not already established an electronic docket.

Information about applying for a digital ID certificate is available on the NRC's public Web site at *http://www.nrc.gov/site-help/e-submittals/getting-started.html.* System requirements for accessing the E-Submittal server are detailed in the NRC's ''Guidance for Electronic Submission,'' which is available on the agency's public Web site at *http://www.nrc.gov/site-help/e-submittals.html.* Participants may attempt to use other software not listed on the Web site, but should note that the NRC's E-Filing system does not support unlisted software, and the NRC Meta System Help Desk will not be able to offer assistance in using unlisted software.

If a participant is electronically submitting a document to the NRC in accordance with the E-Filing rule, the participant must file the document using the NRC's online, Web-based submission form. In order to serve documents through the Electronic Information Exchange System, users will be required to install a Web browser plug-in from the NRC's Web site. Further information on the Web-based submission form, including the installation of the Web browser plug-in, is available on the NRC's public Web site at *http://www.nrc.gov/site-help/e-submittals.html.*

Once a participant has obtained a digital ID certificate and a docket has been created, the participant can then submit a request for hearing or petition for leave to intervene. Submissions should be in Portable Document Format (PDF) in accordance with NRC guidance available on the NRC's public Web site at *http://www.nrc.gov/site-help/e-submittals.html.* A filing is considered complete at the time the documents are submitted through the NRC's E-Filing system. To be timely, an electronic filing must be submitted to the E-Filing system no later than 11:59 p.m. Eastern Time on the due date. Upon receipt of a transmission, the E-Filing system time-stamps the document and sends the submitter an email notice confirming receipt of the document. The E-Filing system also distributes an email notice that provides access to the document to the NRC's Office of the General Counsel and any others who have advised the Office of the Secretary that they wish to participate in the proceeding, so that the filer need not serve the documents on those participants separately. Therefore, applicants and other participants (or their counsel or representative) must apply for and receive a digital ID certificate before a hearing request/petition to intervene is filed so that they can obtain access to the document via the E-Filing system.

A person filing electronically using the NRC's adjudicatory E-Filing system may seek assistance by contacting the NRC Meta System Help Desk through the ''Contact Us'' link located on the NRC's public Web site at *http://www.nrc.gov/site-help/e-submittals.html,* by email to *MSHD.Resource@nrc.gov,* or by a toll-free call at 1–866–672–7640. The NRC Meta System Help Desk is available between 8 a.m. and 8 p.m., Eastern Time, Monday through Friday, excluding government holidays.

Participants who believe that they have a good cause for not submitting documents electronically must file an exemption request, in accordance with 10 CFR 2.302(g), with their initial paper filing requesting authorization to continue to submit documents in paper format. Such filings must be submitted by: (1) First class mail addressed to the Office of the Secretary of the Commission, U.S. Nuclear Regulatory Commission, Washington, DC 20555–0001, Attention: Rulemaking and Adjudications Staff; or (2) courier, express mail, or expedited delivery service to the Office of the Secretary, Sixteenth Floor, One White Flint North, 11555 Rockville Pike, Rockville, Maryland 20852, Attention: Rulemaking and Adjudications Staff. Participants filing a document in this manner are responsible for serving the document on all other participants. Filing is considered complete by first-class mail as of the time of deposit in the mail, or by courier, express mail, or expedited delivery service upon depositing the document with the provider of the service. A presiding officer, having granted an exemption request from using E-Filing, may require a participant or party to use E-Filing if the presiding officer subsequently determines that the reason for granting the exemption from use of E-Filing no longer exists.

Documents submitted in adjudicatory proceedings will appear in the NRC's electronic hearing docket which is available to the public at *http://ehd1.nrc.gov/ehd/,* unless excluded pursuant to an order of the Commission, or the presiding officer. Participants are requested not to include personal privacy information, such as social security numbers, home addresses, or home phone numbers in their filings, unless an NRC regulation or other law requires submission of such information. However, in some instances, a request to intervene will require including information on local residence in order to demonstrate a proximity assertion of interest in the proceeding. With respect to copyrighted works, except for limited excerpts that serve the purpose of the adjudicatory filings and would constitute a Fair Use application, participants are requested not to include copyrighted materials in their submission.

Petitions for leave to intervene must be filed no later than 60 days from the date of publication of this notice. Requests for hearing, petitions for leave to intervene, and motions for leave to file new or amended contentions that are filed after the 60-day deadline will not be entertained absent a determination by the presiding officer that the filing demonstrates good cause by satisfying the three factors in 10 CFR 2.309(c)(1)(i)–(iii).

For further details with respect to this amendment action, see the application for amendment which is available for public inspection at the NRC's PDR, located at One White Flint North, Room O1–F21, 11555 Rockville Pike (first floor), Rockville, Maryland 20852. Publicly available documents created or received at the NRC are accessible electronically through ADAMS in the NRC Library at *http://www.nrc.gov/reading-rm/adams.html.* If you do not have access to ADAMS or if there are problems in accessing the documents located in ADAMS, contact the PDR's Reference staff at 1–800–397–4209, 301–415–4737, or by email to *pdr.resource@nrc.gov.*

Entergy Nuclear Vermont Yankee, LLC and Entergy Nuclear Operations, Inc., Docket No. 50–271, Vermont Yankee Nuclear Power Station (VY), Vernon, Vermont

Date of amendment request: June 24, 2015. A publicly-available version is in ADAMS under Accession No. ML15177A016.

Description of amendment request: This amendment request contains sensitive unclassified non-safeguards information (SUNSI). The amendment would revise the VY Cyber Security Plan (CSP) Milestone 8 Implementation Schedule, full implementation date from June 30, 2016, to December 15, 2017. The proposed amendment would also revise the existing facility operating license Security Plan license condition.

Basis for proposed no significant hazards consideration determination: As required by 10 CFR 50.91(a), the licensee has provided its analysis of the issue of no significant hazards consideration which is presented below:

1. Does the proposed change involve a significant increase in the probability or consequences of an accident previously evaluated?

Response: No.

The proposed change to the CSP Implementation Schedule is administrative in nature. This change does not alter accident analysis assumptions, add any initiators, or affect the function of plant systems or the manner in which systems are operated, maintained, modified, tested, or inspected. The proposed change does not require any plant modifications which affect the performance capability of the structures, systems, and components (SSCs) relied upon to mitigate the consequences of postulated accidents and has no impact on the probability or consequences of an accident previously evaluated.

Therefore, the proposed change does not involve a significant increase in the probability or consequences of an accident previously evaluated.

2. Does the proposed change create the possibility of a new or different kind of accident from any accident previously evaluated?

Response: No.

The proposed change to the CSP Implementation Schedule is administrative in nature. This change does not alter accident analysis assumptions, add any initiators, or affect the function of plant systems or the manner in which systems are operated, maintained, modified, tested, or inspected. The proposed change does not require any plant modifications which affect the performance capability of the SSCs relied upon to mitigate the consequences of postulated accidents and does not create the possibility of a new or different kind of accident previously evaluated.

Therefore, the proposed change does not create the possibility of a new or different kind of accident from any accident previously evaluated.

3. Does the proposed change involve a significant reduction in a margin of safety?

Response: No.

Plant safety margins are established through limiting conditions for operation, limiting safety system settings, and safety limits specified in the Technical Specifications. The proposed change to the CSP Implementation Schedule is administrative in nature. In addition, the milestone date delay for full implementation of the CSP has no substantive impact because other measures have been taken which provide adequate protection during this period of time. Because there is no change to established safety margins as a result of this change, the proposed change does not involve a significant reduction in a margin of safety.

Therefore, the proposed change does not involve a significant reduction in a margin of safety.

The NRC staff has reviewed the licensee's analysis and, based on this review, it appears that the three standards of 10 CFR 50.92(c) are satisfied. Therefore, the NRC staff proposes to determine that the amendment request involves no significant hazards consideration.

Attorney for licensee: Ms. Susan Raimo, Senior Counsel, Entergy Services, Inc., 101 Constitution Avenue NW., Suite 200 East, Washington DC 20001.

NRC Branch Chief: Meena K. Khanna.

Entergy Nuclear Vermont Yankee, LLC and Entergy Nuclear Operations, Inc., Docket No. 50–271, Vermont Yankee Nuclear Power Station, Vernon, Vermont

Order Imposing Procedures for Access to Sensitive Unclassified Non-Safeguards Information for Contention Preparation

A. This Order contains instructions regarding how potential parties to this proceeding may request access to documents containing SUNSI.

B. Within 10 days after publication of this notice of hearing and opportunity to petition for leave to intervene, any potential party who believes access to SUNSI is necessary to respond to this notice may request such access. A ''potential party'' is any person who intends to participate as a party by demonstrating standing and filing an admissible contention under 10 CFR 2.309. Requests for access to SUNSI submitted later than 10 days after publication of this notice will not be considered absent a showing of good cause for the late filing, addressing why the request could not have been filed earlier.

C. The requester shall submit a letter requesting permission to access SUNSI to the Office of the Secretary, U.S. Nuclear Regulatory Commission, Washington, DC 20555–0001, Attention: Rulemakings and Adjudications Staff, and provide a copy to the Associate General Counsel for Hearings, Enforcement and Administration, Office of the General Counsel, Washington, DC 20555–0001. The expedited delivery or courier mail address for both offices is: U.S. Nuclear Regulatory Commission, 11555 Rockville Pike, Rockville, Maryland 20852. The email address for the Office of the Secretary and the Office of the General Counsel are *Hearing.Docket@nrc.gov* and *OGCmailcenter@nrc.gov,* respectively.[1] The request must include the following information:

(1) A description of the licensing action with a citation to this **Federal Register** notice;

(2) The name and address of the potential party and a description of the potential party's particularized interest that could be harmed by the action identified in C.(1); and

(3) The identity of the individual or entity requesting access to SUNSI and the requester's basis for the need for the information in order to meaningfully participate in this adjudicatory proceeding. In particular, the request must explain why publicly-available versions of the information requested would not be sufficient to provide the basis and specificity for a proffered contention.

D. Based on an evaluation of the information submitted under paragraph C.(3) the NRC staff will determine within 10 days of receipt of the request whether:

(1) There is a reasonable basis to believe the petitioner is likely to establish standing to participate in this NRC proceeding; and

(2) The requestor has established a legitimate need for access to SUNSI.

E. If the NRC staff determines that the requestor satisfies both D.(1) and D.(2) above, the NRC staff will notify the requestor in writing that access to SUNSI has been granted. The written notification will contain instructions on how the requestor may obtain copies of the requested documents, and any other conditions that may apply to access to those documents. These conditions may include, but are not limited to, the signing of a Non-Disclosure Agreement or Affidavit, or Protective Order[2] setting

[1] While a request for hearing or petition to intervene in this proceeding must comply with the filing requirements of the NRC's ''E-Filing Rule,'' the initial request to access SUNSI under these procedures should be submitted as described in this paragraph.

[2] Any motion for Protective Order or draft Non-Disclosure Affidavit or Agreement for SUNSI must

forth terms and conditions to prevent the unauthorized or inadvertent disclosure of SUNSI by each individual who will be granted access to SUNSI.

F. Filing of Contentions. Any contentions in these proceedings that are based upon the information received as a result of the request made for SUNSI must be filed by the requestor no later than 25 days after the requestor is granted access to that information. However, if more than 25 days remain between the date the petitioner is granted access to the information and the deadline for filing all other contentions (as established in the notice of hearing or opportunity for hearing), the petitioner may file its SUNSI contentions by that later deadline. This provision does not extend the time for filing a request for a hearing and petition to intervene, which must comply with the requirements of 10 CFR 2.309.

G. Review of Denials of Access.

(1) If the request for access to SUNSI is denied by the NRC staff after a determination on standing and need for access, the NRC staff shall immediately notify the requestor in writing, briefly stating the reason or reasons for the denial.

(2) The requester may challenge the NRC staff's adverse determination by filing a challenge within 5 days of receipt of that determination with: (a) The presiding officer designated in this proceeding; (b) if no presiding officer has been appointed, the Chief Administrative Judge, or if he or she is unavailable, another administrative judge, or an administrative law judge with jurisdiction pursuant to 10 CFR 2.318(a); or (c) officer if that officer has been designated to rule on information access issues.

H. Review of Grants of Access. A party other than the requester may challenge an NRC staff determination granting access to SUNSI whose release would harm that party's interest independent of the proceeding. Such a challenge must be filed with the Chief Administrative Judge within 5 days of the notification by the NRC staff of its grant of access.

If challenges to the NRC staff determinations are filed, these procedures give way to the normal process for litigating disputes concerning access to information. The availability of interlocutory review by the Commission of orders ruling on such NRC staff determinations (whether granting or denying access) is governed by 10 CFR 2.311.[3]

I. The Commission expects that the NRC staff and presiding officers (and any other reviewing officers) will consider and resolve requests for access to SUNSI, and motions for protective orders, in a timely fashion in order to minimize any unnecessary delays in identifying those petitioners who have standing and who have propounded contentions meeting the specificity and basis requirements in 10 CFR part 2. Attachment 1 to this Order summarizes the general target schedule for processing and resolving requests under these procedures.

It is so ordered.

Dated at Rockville, Maryland, this 27th day of August, 2015.

For the Nuclear Regulatory Commission.

Annette L. Vietti-Cook,

Secretary of the Commission.

ATTACHMENT 1—General Target Schedule for Processing and Resolving Requests for Access to Sensitive Unclassified Non-Safeguards Information in This Proceeding

Day	Event/activity
0	Publication of **Federal Register** notice of hearing and opportunity to petition for leave to intervene, including order with instructions for access requests.
10	Deadline for submitting requests for access to Sensitive Unclassified Non-Safeguards Information (SUNSI) with information: supporting the standing of a potential party identified by name and address; describing the need for the information in order for the potential party to participate meaningfully in an adjudicatory proceeding.
60	Deadline for submitting petition for intervention containing: (i) demonstration of standing; and (ii) all contentions whose formulation does not require access to SUNSI (+25 Answers to petition for intervention; +7 petitioner/requestor reply).
20	U.S. Nuclear Regulatory Commission (NRC) staff informs the requester of the staff's determination whether the request for access provides a reasonable basis to believe standing can be established and shows need for SUNSI. (NRC staff also informs any party to the proceeding whose interest independent of the proceeding would be harmed by the release of the information.) If NRC staff makes the finding of need for SUNSI and likelihood of standing, NRC staff begins document processing (preparation of redactions or review of redacted documents).
25	If NRC staff finds no "need" or no likelihood of standing, the deadline for petitioner/requester to file a motion seeking a ruling to reverse the NRC staff's denial of access; NRC staff files copy of access determination with the presiding officer (or Chief Administrative Judge or other designated officer, as appropriate). If NRC staff finds "need" for SUNSI, the deadline for any party to the proceeding whose interest independent of the proceeding would be harmed by the release of the information to file a motion seeking a ruling to reverse the NRC staff's grant of access.
30	Deadline for NRC staff reply to motions to reverse NRC staff determination(s).
40	(Receipt +30) If NRC staff finds standing and need for SUNSI, deadline for NRC staff to complete information processing and file motion for Protective Order and draft Non-Disclosure Affidavit. Deadline for applicant/licensee to file Non-Disclosure Agreement for SUNSI.
A	If access granted: issuance of presiding officer or other designated officer decision on motion for protective order for access to sensitive information (including schedule for providing access and submission of contentions) or decision reversing a final adverse determination by the NRC staff.
A + 3	Deadline for filing executed Non-Disclosure Affidavits. Access provided to SUNSI consistent with decision issuing the protective order.
A + 28	Deadline for submission of contentions whose development depends upon access to SUNSI. However, if more than 25 days remain between the petitioner's receipt of (or access to) the information and the deadline for filing all other contentions (as established in the notice of hearing or opportunity for hearing), the petitioner may file its SUNSI contentions by that later deadline.
A + 53	(Contention receipt +25) Answers to contentions whose development depends upon access to SUNSI.
A + 60	(Answer receipt +7) Petitioner/Intervenor reply to answers.

be filed with the presiding officer or the Chief Administrative Judge if the presiding officer has not yet been designated, within 30 days of the deadline for the receipt of the written access request.

[3] Requesters should note that the filing requirements of the NRC's E-Filing Rule (72 FR 49139; August 28, 2007) apply to appeals of NRC staff determinations (because they must be served on a presiding officer or the Commission, as applicable), but not to the initial SUNSI request submitted to the NRC staff under these procedures.

ATTACHMENT 1—GENERAL TARGET SCHEDULE FOR PROCESSING AND RESOLVING REQUESTS FOR ACCESS TO SENSITIVE UNCLASSIFIED NON-SAFEGUARDS INFORMATION IN THIS PROCEEDING—Continued

Day	Event/activity
>A + 60	Decision on contention admission.

[FR Doc. 2015–21795 Filed 9–4–15; 8:45 am]

BILLING CODE 7590–01–P

NUCLEAR REGULATORY COMMISSION

[NRC–2015–0001]

Sunshine Act Meeting Notice

DATE: September 7, 14, 21, 28, October 5, 12, 2015.

PLACE: Commissioners' Conference Room, 11555 Rockville Pike, Rockville, Maryland.

STATUS: Public and Closed.

Week of September 7, 2015

Tuesday, September 8, 2015

9:25 a.m. Affirmation Session (Public Meeting)—Tentative

(a) Final Rule: Hearing on Challenges to the Immediate Effectiveness of Orders (10 CFR parts 2 and 150; RIN 3150–AJ27). (Tentative)

(b) *DTE Electric Co.* (Fermi Nuclear Power Plant, Unit 2), *Applicant's Appeal of LBP–15–5* (Mar. 3, 2015). (Tentative)

This meeting will be webcast live at the Web address—*http://www.nrc.gov/*.

9:30 a.m. Briefing on Project AIM 2020 (Public Meeting) (Contact: Karen Fitch: 301–415–7358)

This meeting will be webcast live at the Web address—*http://www.nrc.gov/*.

Thursday, September 10, 2015

9:30 a.m. Briefing on NRC International Activities (Closed—Ex. 1 & 9)

Week of September 14, 2015—Tentative

There are no meetings scheduled for the week of September 14, 2015.

Week of September 21, 2015—Tentative

Tuesday, September 22, 2015

9:30 a.m. Discussion of Management and Personnel Issues (Closed—Ex. 2 & 6)

Thursday, September 24, 2015

9:30 a.m. Strategic Programmatic Overview of the New Reactors Business Line (Public Meeting) (Contact: Donna Williams: 301–415–1322)

This meeting will be webcast live at the Web address—*http://www.nrc.gov/*.

Week of September 28, 2015—Tentative

Monday, September 28, 2015

1:30 p.m. NRC All Employees Meeting (Public Meeting), Marriott Bethesda North Hotel, 5701 Marinelli Road, Rockville, MD 20852

Thursday, October 1, 2015

9:00 a.m. Strategic Programmatic Overview of the Decommissioning and Low-Level Waste and Spent Fuel Storage and Transportation Business Lines (Public Meeting) (Contact: Damaris Marcano: 301–415–7328)

This meeting will be webcast live at the Web address—*http://www.nrc.gov/*.

Week of October 5, 2015—Tentative

There are no meetings scheduled for the week of October 5, 2015.

Week of October 12, 2015—Tentative

There are no meetings scheduled for the week of October 12, 2015.

* * * * *

The schedule for Commission meetings is subject to change on short notice. For more information or to verify the status of meetings, contact Glenn Ellmers at 301–415–0442 or via email at *Glenn.Ellmers@nrc.gov.*

* * * * *

The NRC Commission Meeting Schedule can be found on the Internet at: *http://www.nrc.gov/public-involve/public-meetings/schedule.html.*

* * * * *

The NRC provides reasonable accommodation to individuals with disabilities where appropriate. If you need a reasonable accommodation to participate in these public meetings, or need this meeting notice or the transcript or other information from the public meetings in another format (*e.g.* braille, large print), please notify Kimberly Meyer, NRC Disability Program Manager, at 301–287–0727, by videophone at 240–428–3217, or by email at *Kimberly.Meyer-Chambers@nrc.gov*. Determinations on requests for reasonable accommodation will be made on a case-by-case basis.

* * * * *

Members of the public may request to receive this information electronically. If you would like to be added to the distribution, please contact the Nuclear Regulatory Commission, Office of the Secretary, Washington, DC 20555 (301–415–1969), or email *Brenda.Akstulewicz@nrc.gov* or *Patricia.Jimenez@nrc.gov.*

Dated: September 2, 2015.

Glenn Ellmers,

Policy Coordinator, Office of the Secretary.

[FR Doc. 2015–22613 Filed 9–3–15; 11:15 am]

BILLING CODE 7590–01–P

NUCLEAR REGULATORY COMMISSION

[NRC–2014–0204]

Quality Assurance Program Description—Design Certification, Early Site Permit and New License Applicants

AGENCY: Nuclear Regulatory Commission.

ACTION: Standard review plan-final section; issuance.

SUMMARY: The U.S. Nuclear Regulatory Commission (NRC) is issuing a final revision to NUREG–0800, ''Standard Review Plan for the Review of Safety Analysis Reports for Nuclear Power Plants: LWR Edition,'' Section 17.5, ''Quality Assurance Program Description—Design Certification, Early Site Permit and New License Applicants.''

DATES: The effective date of this Standard Review Plan (SRP) update is October 8, 2015.

ADDRESSES: Please refer to Docket ID NRC–2014–0204 when contacting the NRC about the availability of information regarding this document. You may obtain publicly-available information related to this document using any of the following methods:

- *Federal Rulemaking Web site:* Go to *http://www.regulations.gov* and search for Docket ID NRC–2014–0204. Address questions about NRC dockets to Carol Gallagher; telephone: 301–415–3463; email: *Carol.Gallagher@nrc.gov.* For technical questions, contact the individual listed in the **FOR FURTHER INFORMATION CONTACT** section of this document.
- *NRC's Agencywide Documents Access and Management System (ADAMS):* You may obtain publicly-available documents online in the

ADAMS Public Documents collection at *http://www.nrc.gov/reading-rm/adams.html.* To begin the search, select ''*ADAMS Public Documents*'' and then select ''*Begin Web-based ADAMS Search.*'' For problems with ADAMS, please contact the NRC's Public Document Room (PDR) reference staff at 1–800–397–4209, 301–415–4737, or by email to *pdr.resource@nrc.gov.* The ADAMS accession number for each document referenced (if it available in ADAMS) is provided the first time that a document is referenced. The final revision for Standard Review Plan (SRP) Section 17.5, ''Quality Assurance Program Description—Design Certification, Early Site Permit and New License Applicants,'' is available in ADAMS under Accession No. ML15037A441.

- *NRC's PDR:* You may examine and purchase copies of public documents at the NRC's PDR, Room O1–F21, One White Flint North, 11555 Rockville Pike, Rockville, Maryland 20852.
- The NRC posts its issued staff guidance on the NRC's external Web page (*http://www.nrc.gov/reading-rm/doc-collections/nuregs/staff/sr0800/*).

FOR FURTHER INFORMATION CONTACT: Mark Notich, Office of New Reactors, U.S. Nuclear Regulatory Commission, Washington, DC 20555–0001; telephone: 301–415–3053; email: *Mark.Notich@nrc.gov.*

SUPPLEMENTARY INFORMATION:

I. Background

On September 24, 2014 (79 FR 57143), the NRC published for public comment the proposed SRP Section 17.5, ''Quality Assurance Program Description—Design Certification, Early Site Permit and New License Applicants,'' in Chapter 17, ''Quality Assurance,'' of NUREG–0800. The staff received a total of nine comments on the draft section. A summary of the comments and the staff's disposition of the comments are available in a separate document, ''*Response to Public Comments on Draft Standard Review Plan, Section 17.5, Quality Assurance Program Description—Design Certification, Early Site Permit and New License Applicants*'' (ADAMS Accession No. ML15037A303).

II. Backfitting and Issue Finality

The SRP Section 17.5 provides guidance to the staff for reviewing applications for a construction permit and an operating license under part 50 of Title 10 of the *Code of Federal Regulations* (10 CFR), ''Domestic Licensing of Production and Utilization Facilities,'' with respect to compliance with the ''Quality Assurance Program Description—Certification, Early Site Permit and New License Applicants,'' 10 CFR 50.65 and the guidance in Nuclear Management and Resources Council 93–01 as approved for use by the NRC in Regulatory Guide 1.160, ''Monitoring the Effectiveness of Maintenance at Nuclear Power Plants,'' SRP Section 17.5 also provides guidance for reviewing an application for a standard design approval, a standard design certification, a combined license, and a manufacturing license under 10 CFR part 52, ''Licenses, Certifications, and Approvals for Nuclear Power Plants,'' with respect to those same subject matters.

Issuance of this SRP section revision does not constitute backfitting as defined in 10 CFR 50.109 (the Backfit Rule) nor is it inconsistent with the issue finality provisions in 10 CFR part 52. The NRC's position is based upon the following considerations.

1. *The SRP positions would not constitute backfitting, inasmuch as the SRP is internal guidance to NRC staff.*

The SRP provides internal guidance to the NRC staff on how to review an application for NRC regulatory approval in the form of licensing. Changes in internal staff guidance are not matters for which either nuclear power plant applicants or licensees are protected under either the Backfit Rule or the issue finality provisions of 10 CFR part 52.

2. *The NRC staff has no intention to impose the SRP positions on existing licensees either now or in the future.*

The NRC staff does not intend to impose or apply the positions described in the SRP to existing licenses and regulatory approvals. Hence, the issuance of this SRP—even if considered guidance within the purview of the issue finality provisions in 10 CFR part 52—does not need to be evaluated as if it were a backfit or as being inconsistent with issue finality provisions. If, in the future, the NRC staff seeks to impose a position in the SRP on holders of already issued licenses in a manner that does not provide issue finality as described in the applicable issue finality provision, then the staff must make the showing as set forth in the Backfit Rule or address the criteria for avoiding issue finality as described in the applicable issue finality provision.

3. *Backfitting and issue finality do not—with limited exceptions not applicable here—protect current or future applicants.*

Applicants and potential applicants are not, with certain exceptions, protected by either the Backfit Rule or any issue finality provisions under 10 CFR part 52. Neither the Backfit Rule nor the issue finality provisions under 10 CFR part 52—with certain exclusions—were intended to apply to every NRC action that substantially changes the expectations of current and future applicants.

The exceptions to the general principle are applicable whenever an applicant references a 10 CFR part 52 license (*e.g.,* an early site permit) or NRC regulatory approval (*e.g.,* a design certification rule) with specified issue finality provisions. The NRC staff does not, at this time, intend to impose the positions represented in the SRP in a manner that is inconsistent with any issue finality provisions. If, in the future, the staff seeks to impose a position in the SRP section in a manner that does not provide issue finality as described in the applicable issue finality provision, then the staff must address the criteria for avoiding issue finality as described in the applicable issue finality provision.

III. Congressional Review Act

This action is a rule as defined in the Congressional Review Act (5 U.S.C. 801–808). However, the Office of Management and Budget has not found it to be a major rule as defined in the Congressional Review Act.

Dated at Rockville, Maryland, this 28th day of August, 2015.

For the Nuclear Regulatory Commission.

Carolyn Lauron,

Acting Chief, New Reactor Rulemaking and Guidance Branch, Division of Advanced Reactors and Rulemaking, Office of New Reactors.

[FR Doc. 2015–22555 Filed 9–4–15; 8:45 am]

BILLING CODE 7590–01–P

POSTAL REGULATORY COMMISSION

[Docket No. CP2015–133; Order No. 2692]

New Postal Product

AGENCY: Postal Regulatory Commission.

ACTION: Notice.

SUMMARY: The Commission is noticing a recent Postal Service filing concerning an additional Global Expedited Package Services 3 negotiated service agreement. This notice informs the public of the filing, invites public comment, and takes other administrative steps.

DATES: *Comments are due:* September 9, 2015.

ADDRESSES: Submit comments electronically via the Commission's Filing Online system at *http://www.prc.gov.* Those who cannot submit

comments electronically should contact the person identified in the **FOR FURTHER INFORMATION CONTACT** section by telephone for advice on filing alternatives.

FOR FURTHER INFORMATION CONTACT: David A. Trissell, General Counsel, at 202–789–6820.

SUPPLEMENTARY INFORMATION:

Table of Contents

I. Introduction
II. Notice of Commission Action
III. Ordering Paragraphs

I. Introduction

On August 31, 2015, the Postal Service filed notice that it has entered into an additional Global Expedited Package Services 3 (GEPS 3) negotiated service agreement (Agreement).[1]

To support its Notice, the Postal Service filed a copy of the Agreement, a copy of the Governors' Decision authorizing the product, a certification of compliance with 39 U.S.C. 3633(a), and an application for non-public treatment of certain materials. It also filed supporting financial workpapers.

II. Notice of Commission Action

The Commission establishes Docket No. CP2015–133 for consideration of matters raised by the Notice.

The Commission invites comments on whether the Postal Service's filing is consistent with 39 U.S.C. 3632, 3633, or 3642, 39 CFR part 3015, and 39 CFR part 3020, subpart B. Comments are due no later than September 9, 2015. The public portions of the filing can be accessed via the Commission's Web site (*http://www.prc.gov*).

The Commission appoints Kenneth R. Moeller to serve as Public Representative in this docket.

III. Ordering Paragraphs

It is ordered:

1. The Commission establishes Docket No. CP2015–133 for consideration of the matters raised by the Postal Service's Notice.
2. Pursuant to 39 U.S.C. 505, Kenneth R. Moeller is appointed to serve as an officer of the Commission to represent the interests of the general public in this proceeding (Public Representative).
3. Comments are due no later than September 9, 2015.
4. The Secretary shall arrange for publication of this order in the **Federal Register**.

[1] Notice of United States Postal Service of Filing a Functionally Equivalent Global Expedited Package Services 3 Negotiated Service Agreement and Application for Non-Public Treatment of Materials Filed Under Seal, August 31, 2015 (Notice).

By the Commission.

Shoshana M. Grove,

Secretary.

[FR Doc. 2015–22506 Filed 9–4–15; 8:45 am]

BILLING CODE 7710–FW–P

POSTAL REGULATORY COMMISSION

[Docket No. CP2015–132; Order No. 2691]

New Postal Product

AGENCY: Postal Regulatory Commission.

ACTION: Notice.

SUMMARY: The Commission is noticing a recent Postal Service filing concerning an additional Global Expedited Package Services 3 negotiated service agreement. This notice informs the public of the filing, invites public comment, and takes other administrative steps.

DATES: *Comments are due:* September 9, 2015.

ADDRESSES: Submit comments electronically via the Commission's Filing Online system at *http://www.prc.gov.* Those who cannot submit comments electronically should contact the person identified in the **FOR FURTHER INFORMATION CONTACT** section by telephone for advice on filing alternatives.

FOR FURTHER INFORMATION CONTACT: David A. Trissell, General Counsel, at 202–789–6820.

SUPPLEMENTARY INFORMATION:

Table of Contents

I. Introduction
II. Notice of Commission Action
III. Ordering Paragraphs

I. Introduction

On August 31, 2015, the Postal Service filed notice that it has entered into an additional Global Expedited Package Services 3 (GEPS 3) negotiated service agreement (Agreement).[1]

To support its Notice, the Postal Service filed a copy of the Agreement, a copy of the Governors' Decision authorizing the product, a certification of compliance with 39 U.S.C. 3633(a), and an application for non-public treatment of certain materials. It also filed supporting financial workpapers.

II. Notice of Commission Action

The Commission establishes Docket No. CP2015–132 for consideration of matters raised by the Notice.

[1] Notice of United States Postal Service of Filing a Functionally Equivalent Global Expedited Package Services 3 Negotiated Service Agreement and Application for Non-Public Treatment of Materials Filed Under Seal, August 31, 2015 (Notice).

The Commission invites comments on whether the Postal Service's filing is consistent with 39 U.S.C. 3632, 3633, or 3642, 39 CFR part 3015, and 39 CFR part 3020, subpart B. Comments are due no later than September 9, 2015. The public portions of the filing can be accessed via the Commission's Web site (*http://www.prc.gov*).

The Commission appoints JP Klingenberg to serve as Public Representative in this docket.

III. Ordering Paragraphs

It is ordered:

1. The Commission establishes Docket No. CP2015–132 for consideration of the matters raised by the Postal Service's Notice.
2. Pursuant to 39 U.S.C. 505, JP Klingenberg is appointed to serve as an officer of the Commission to represent the interests of the general public in this proceeding (Public Representative).
3. Comments are due no later than September 9, 2015.
4. The Secretary shall arrange for publication of this order in the **Federal Register**.

By the Commission.

Shoshana M. Grove,

Secretary.

[FR Doc. 2015–22505 Filed 9–4–15; 8:45 am]

BILLING CODE 7710–FW–P

SECURITIES AND EXCHANGE COMMISSION

[Release Nos. 33–9899; 34–75812; File No. 265–27]

SEC Advisory Committee on Small and Emerging Companies

AGENCY: Securities and Exchange Commission.

ACTION: Notice of meeting.

SUMMARY: The Securities and Exchange Commission Advisory Committee on Small and Emerging Companies is providing notice that it will hold a public meeting on Wednesday, September 23, 2015, in Multi-Purpose Room LL–006 at the Commission's headquarters, 100 F Street NE., Washington, DC. The meeting will begin at 9:30 a.m. (EDT) and will be open to the public. The meeting will be webcast on the Commission's Web site at *www.sec.gov.* Persons needing special accommodations to take part because of a disability should notify the contact person listed below. The public is invited to submit written statements to the Committee. The agenda for the meeting includes matters relating to rules and regulations affecting small and

emerging companies under the federal securities laws.

DATES: The public meeting will be held on Wednesday, September 23, 2015. Written statements should be received on or before September 21, 2015.

ADDRESSES: The meeting will be held at the Commission's headquarters, 100 F Street NE., Washington, DC. Written statements may be submitted by any of the following methods:

Electronic Statements

- Use the Commission's Internet submission form (*http://www.sec.gov/info/smallbus/acsec.shtml*); or
- Send an email message to *rule-comments@sec.gov.* Please include File Number 265–27 on the subject line; or

Paper Statements

- Send paper statements to Brent J. Fields, Federal Advisory Committee Management Officer, Securities and Exchange Commission, 100 F Street NE., Washington, DC 20549–1090.

All submissions should refer to File No. 265–27. This file number should be included on the subject line if email is used. To help us process and review your statement more efficiently, please use only one method. The Commission will post all statements on the Advisory Committee's Web site (*http://www.sec.gov/spotlight/acsec-spotlight.shtml*).

Statements also will be available for Web site viewing and printing in the Commission's Public Reference Room, 100 F Street NE., Washington, DC 20549, on official business days between the hours of 10 a.m. and 3 p.m. All statements received will be posted without change; we do not edit personal identifying information from submissions. You should submit only information that you wish to make available publicly.

FOR FURTHER INFORMATION CONTACT: Julie Z. Davis, Senior Special Counsel, at (202) 551–3460, Office of Small Business Policy, Division of Corporation Finance, Securities and Exchange Commission, 100 F Street NE., Washington, DC 20549–3628.

SUPPLEMENTARY INFORMATION: In accordance with Section 10(a) of the Federal Advisory Committee Act, 5 U.S.C.-App. 1, and the regulations thereunder, Keith Higgins, Designated Federal Officer of the Committee, has ordered publication of this notice.

Dated: September 2, 2015.

Brent J. Fields,

Committee Management Officer.

[FR Doc. 2015–22533 Filed 9–4–15; 8:45 am]

BILLING CODE 8011–01–P

SECURITIES AND EXCHANGE COMMISSION

[Release No. 34–75801; File No. SR–NYSEARCA–2015–56]

Self-Regulatory Organizations; NYSE Arca, Inc.; Notice of Designation of a Longer Period for Commission Action on Proposed Rule Change Adopting New Equity Trading Rules Relating to Orders and Modifiers and the Retail Liquidity Program To Reflect the Implementation of Pillar, the Exchange's New Trading Technology Platform

September 1, 2015.

On July 7, 2015, NYSE Arca, Inc. (the ''Exchange'' or ''NYSE Arca'') filed with the Securities and Exchange Commission (''Commission''), pursuant to section 19(b)(1) of the Securities Exchange Act of 1934 (''Act'') [1] and Rule 19b–4 thereunder,[2] a proposed rule change adopting new equity trading rules relating to orders and modifiers and the Retail Liquidity Program to reflect the implementation of Pillar, the Exchange's new trading technology platform. The proposed rule change was published for comment in the **Federal Register** on July 28, 2015.[3]

Section 19(b)(2) of the Act [4] provides that within 45 days of the publication of notice of the filing of a proposed rule change, or within such longer period up to 90 days as the Commission may designate if it finds such longer period to be appropriate and publishes its reasons for so finding or as to which the self-regulatory organization consents, the Commission shall either approve the proposed rule change, disapprove the proposed rule change, or institute proceedings to determine whether the proposed rule change should be disapproved. The 45th day for this filing is September 11, 2015. The Commission is extending this 45-day time period.

The Commission finds it appropriate to designate a longer period within which to take action on the proposed rule change, so that it has sufficient time to consider this proposed rule change.

Accordingly, the Commission, pursuant to section 19(b)(2) of the Act,[5] designates October 26, 2015, as the date by which the Commission should either approve or disapprove, or institute proceedings to determine whether to disapprove, the proposed rule change (File No. SR–NYSEARCA–2015–56).

For the Commission, by the Division of Trading and Markets, pursuant to delegated authority.[6]

Robert W. Errett,

Deputy Secretary.

[FR Doc. 2015–22491 Filed 9–4–15; 8:45 am]

BILLING CODE 8011–01–P

[1] 15 U.S.C. 78s(b)(1).

[2] 17 CFR 240.19b–4.

[3] *See* Securities Exchange Act Release No. 75497 (July 21, 2015), 80 FR 45022.

[4] 15 U.S.C. 78s(b)(2).

[5] 15 U.S.C. 78s(b)(2).

[6] 17 CFR 200.30–3(a)(31).

SECURITIES AND EXCHANGE COMMISSION

[Release No. 34–75803; File No. TP 15–14]

Order Granting Greenbacker Renewable Energy Company LLC a Limited Exemption

September 1, 2015.

By letter dated September 1, 2015 (the ''Letter''), as supplemented by conversations with the staff of the Division of Trading and Markets, counsel for Greenbacker Renewable Energy Company LLC (the ''Company'') requested that the Commission grant an exemption from Rule 102(a) of Regulation M to permit the Company to effect repurchases of shares of its common stock pursuant to its proposed share repurchase program (the ''Repurchase Program'').

As a consequence of the continuous offering of the Company's shares, the Company will be engaged in a distribution of shares of its common stock pursuant to Rule 102 of Regulation M. As a result, bids for or purchases of shares of its common stock or any reference security by the Company or any affiliated purchaser of the Company are prohibited during the restricted period specified in Rule 102, unless specifically excepted by or exempted from Rule 102.

Based on the representations and facts presented in its Letter, we find that it is appropriate in the public interest and consistent with the protection of investors to grant a conditional exemption from Rule 102 of Regulation M to permit the Company to repurchase shares of its common stock under its Repurchase Program while the Company is engaged in a distribution of shares of its common stock. In granting this exemption, we considered the following representations and facts, among others:

- There is no trading market for the Company's common stock;
- The Company will terminate its Repurchase Program in the event a secondary market for its common stock develops;

• Shares of the Company will be offered on a continuous basis until the earlier of when the full amount of shares registered under the registration statement have been sold and August 7, 2016, though the Company may decide to extend the offering beyond this date if Greenbacker Capital Management LLC, the Company's advisor (''Advisor''), determines, and the Company's board agrees, that the maximum amount has not been met at the expiration date but the Advisor believes there is sufficient investor interest or a need for additional capital to pursue an additional investment;

• The Company represents that the structure is similar to non-listed REITs;

• Net asset value (''NAV'') is computed based on the fair value of the Company's assets, which is determined by the Advisor, on a quarterly basis in accordance with ASC 820; [1]

• The report prepared by the Advisor regarding its NAV determination and methodology is reviewed and approved by the Company's audit committee and board of directors on a quarterly basis, reviewed by the Company's independent auditors on a quarterly basis, and audited by the Company's independent auditors as part of its annual audit;

• The Company disclosed in its prospectus the original valuation methodology and will disclose in a prospectus supplement any material changes to the valuation methodology prior to implementation;

• The Company will repurchase shares of its common stock under its Repurchase Program at a price that does not exceed the then current public offering price of its common stock;

• The offering price for each class of shares consists of the NAV per share plus selling commissions and dealer manager fees, which are set at a fixed percentage of the offering price depending on the share class, and organization and offering expenses, which have been calculated as a percentage of gross offering proceeds;

• The method of calculating these commissions and fees and their current values are set forth in the prospectus;

• Because the Company will repurchase shares at a price equal to the then-current offering price less the selling commissions and dealer manager fees associated with such class of shares, the Company will purchase at a price directly and mechanically linked to NAV; and

• The terms of the Repurchase Program, including the above methodology regarding the repurchase price, will be fully disclosed in the Company's prospectus.

[1] ASC 820, a widely accepted accounting standard which defines fair value, establishes a framework for measuring fair value in accordance with generally accepted accounting principles, and requires certain disclosures about fair value measurements.

Conclusion

It is hereby ordered, pursuant to Rule 102(e) of Regulation M, that the Company, based on the representations and the facts presented in its Letter (as supplemented by conversations with the staff of the Division of Trading and Markets) and subject to the conditions contained in this order, is exempt from the requirements of Rule 102 with respect to the Company's Repurchase Program as described in its Letter.

This exemptive relief is subject to the following conditions:

• The Company shall terminate its Repurchase Program during the distribution of its common stock if a secondary market for its common stock develops.

• The Company will repurchase shares of its common stock under its Repurchase Program at a price that does not exceed the then current public offering price, a price directly and mechanically linked to NAV, of its common stock.

This exemptive relief is subject to modification or revocation at any time the Commission determines that such action is necessary or appropriate in furtherance of the purposes of the Exchange Act. This exemption is based on the facts presented and the representations made in the Letter. Any different facts or representations may require a different response. In the event that any material change occurs in the facts or representations in the Letter, the Repurchase Program must be discontinued, pending presentation of the facts for our consideration. In addition, persons relying on this exemption are directed to the anti-fraud and anti-manipulation provisions of the federal securities laws, particularly Section 10(b) of the Exchange Act, and Rule 10b–5 thereunder. Responsibility for compliance with these and any other applicable provisions of the federal securities laws must rest with the persons relying on this exemption. This order should not be considered a view with respect to any other question that the proposed transactions may raise, including, but not limited to, the adequacy of the disclosure concerning, and the applicability of other federal or state laws to, the proposed transactions.

For the Commission, by the Division of Trading and Markets, pursuant to delegated authority.[2]

Robert W. Errett,

Deputy Secretary.

[FR Doc. 2015–22492 Filed 9–4–15; 8:45 am]

BILLING CODE P

[2] 17 CFR 200.30–3(a)(6).

SECURITIES AND EXCHANGE COMMISSION

[Release No. 34–75804; File No. SR–ISE Gemini-2015–14]

Self-Regulatory Organizations; ISE Gemini, LLC; Notice of Filing and Immediate Effectiveness of Proposed Rule Change Adopting a Principles-Based Approach to Prohibit the Misuse of Material, Non-public Information by Market Makers by Deleting Rule 810

September 1, 2015.

Pursuant to Section 19(b)(1) of the Securities Exchange Act of 1934 (the ''Act''),[1] and Rule 19b–4 thereunder,[2] notice is hereby given that on August 31, 2015, ISE Gemini, LLC (the ''Exchange'' or the ''ISE Gemini'') filed with the Securities and Exchange Commission the proposed rule change as described in Items I, II, and III below, which Items have been prepared by the self-regulatory organization. The Exchange has designated this proposal as a ''non-controversial'' proposed rule change pursuant to Section 19(b)(3)(A) of the Act [3] and Rule 19b–4(f)(6)(iii) thereunder,[4] which renders it effective upon filing with the Commission. The Commission is publishing this notice to solicit comments on the proposed rule change from interested persons.

I. Self-Regulatory Organization's Statement of the Terms of Substance of the Proposed Rule Change

ISE Gemini proposes to adopt a principles-based approach to prohibit the misuse of material, non-public information by market makers by deleting Rule 810. The text of the proposed rule change is available on the Exchange's Web site at *www.ise.com,* at the principal office of the Exchange, and at the Commission's Public Reference Room.

II. Self-Regulatory Organization's Statement of the Purpose of, and Statutory Basis for, the Proposed Rule Change

In its filing with the Commission, the self-regulatory organization included

[1] 15 U.S.C. 78s(b)(1).

[2] 17 CFR 240.19b–4.

[3] 15 U.S.C. 78s(b)(3)(A).

[4] 17 CFR 240.19b–4(f)(6)(iii).

statements concerning the purpose of, and basis for, the proposed rule change and discussed any comments it received on the proposed rule change. The text of these statements may be examined at the places specified in Item IV below. The Exchange has prepared summaries, set forth in sections A, B, and C below, of the most significant aspects of such statements.

A. Self-Regulatory Organization's Statement of the Purpose of, and Statutory Basis for, the Proposed Rule Change

(a) Purpose

The Exchange proposes to adopt a principles-based approach to prohibit the misuse of material, non-public information by market makers by deleting Rule 810. In so doing, the Exchange would harmonize its rules amongst its Members [5] relating to protecting against the misuse of material, non-public information. The Exchange believes that Rule 810 is no longer necessary because all Members, including market makers, are subject to the Exchange's general principles-based requirements governing the protection against the misuse of material, non-public information, pursuant to Exchange Rules, Chapter 4—Business Conduct, Rule 408 (Prevention of the Misuse of Material Nonpublic Information), section (a) (''Rule 408(a)''), which obviates the need for separately-prescribed requirements for a subset of market participants on the Exchange.

Background

The Exchange has two classes of registered market makers. Pursuant to Rule 800, a market maker is a Member with Designated Trading Representatives that is registered with the Exchange for the purpose of making transactions as a dealer-specialist. As the rule further provides, a market maker can be either a CMM or a PMM. All market makers are subject to the requirements of Rules 803 and 804, which set forth the obligations of market makers, particularly relating to quoting.

Rule 803 specifies the obligations of market makers, which include making markets that, absent changed market conditions, will be honored for the number of contracts entered into the Exchange's System in all series of options classes to which the market maker is appointed. The quoting obligations of market makers are set forth in Rule 804. That rule sets forth the main difference between PMMs and CMMs, namely that PMMs have a heightened quoting obligation as compared to CMMs.[6] In addition to a heightened quoting obligation pursuant to Rule 804, an Electronic Access Member may designate a Preferred Market Maker [7] on orders it enters into the System (''Preferenced Orders''). These Preferred Market Makers, quoting at the NBBO at the time the Preferenced Order is received, are eligible to receive a greater allocation of participation rights.[8]

Importantly, all market makers have access to the same information in the order book that is available to all other market participants. Moreover, none of the Exchange's market makers have agency obligations to the Exchange's order book. As such, the distinctions between PMMs and CMMs are the quoting requirements set forth in Rule 804.

Notwithstanding that market makers have access to the same Exchange trading information as all other market participants on the Exchange, the Exchange has specific rules governing how market makers may operate. Rule 810 allows market makers to engage in Other Business Activities [9] and to be affiliated with a broker-dealer that engages in Other Business Activities *only if* there is an Information Barrier between the marking making activities and the Other Business Activities. The Rule further provides that market makers must implement detailed Exchange-approved procedures to restrict the flow of material, non-public information. Rule 810(b) outlines the organizational structure of the Information Barrier, which a market maker must implement to meet the requirements of Rule 810(a). The Information Barrier is meant to ensure that a market maker will not have access to material, non-public information while engaging in Other Business Activities and that a market maker will not misuse material, non-public information obtained from an affiliated broker-dealer engaged in the Other Business Activities.

Proposed Rule Change

The Exchange believes that the guidelines in Rule 810, for market makers, are no longer necessary and proposes to delete it. Rather, the Exchange believes that Rule 408(a) governing the misuse of material, non-public information provides for an appropriate, principles-based approach to prevent the market abuses Rule 810 is designed to address. Specifically Rule 408(a) requires every Exchange Member to establish, maintain and enforce written policies and procedures reasonably designed, taking into consideration the nature of the Member's business, to prevent the misuse of material, non-public information by such Member or associated person. For purposes of this requirement, the misuse of material, non-public information includes, but is not limited to, the following:

(a) Trading in any securities issued by a corporation, partnership, or Funds, as defined in Rule 502(h), or a trust or similar entities, or in any related securities or related options or other derivative securities, or in any related non-U.S. currency, non-U.S. currency options, futures or options on futures on such currency, or any other derivatives based on such currency, or in any related commodity, related commodity futures or options on commodity futures or any other related commodity derivatives, while in possession of material nonpublic information concerning that corporation or those Funds or that trust or similar entities;

(b) trading in an underlying security or related options or other derivative securities, or in any related non-U.S. currency, non-U.S. currency options, futures or options on futures on such currency, or in any related commodity, related commodity futures or options on commodity futures or any other related commodity derivatives, or any other derivatives based on such currency while in possession of material nonpublic information concerning imminent transactions in the above; and

[5] The term ''Member'' means an organization that has been approved to exercise trading rights associated with Exchange Rights. *See* Rule 100(a)(23).

[6] Compare Rule 804(e)(1) (''Primary Market Makers. Primary Market Makers must enter continuous quotations and enter into any resulting transactions in all of the series listed on the Exchange of the options classes to which it is appointed on a daily basis.'') *with* 804(e)(2) (''Competitive Market Makers. (i) On any given day, a Competitive Market Maker is not required to enter quotations in the options classes to which it is appointed. (ii) A Competitive Market Maker may initiate quoting in options classes to which it is appointed intraday. (iii) Whenever a Competitive Market Maker enters a quote in an options class to which it is appointed, it must maintain continuous quotations in that class for 60% of the time the class is open for trading on the Exchange; provided, however, that a Competitive Market Maker shall be required to maintain continuous quotations for 90% of the time the class is open for trading on the Exchange in any options class in which it receives Preferenced Orders. . . .'').

[7] A Preferred Market Maker may be the PMM appointed to the options class or any CMM appointed to the options class.

[8] .03 of Supplementary Material to Rule 713.

[9] Other Business Activities means ''(1) conducting an investment or banking or public securities business; (2) making markets in the stocks underlying the options in which it makes markets; or (3) handling listed options orders as agent on behalf of Public Customers or broker-dealers; (4) conducting non-market making proprietary listed options trading activities.''

(c) disclosing to another person any material nonpublic information involving a corporation, partnership, or Funds or a trust or similar entities whose shares are publicly traded or an imminent transaction in an underlying security or related securities or in the underlying non-U.S. currency or any related non-U.S. currency options, futures or options on futures on such currency, or in any related commodity, related commodity futures or options on commodity futures or any other related commodity derivatives, or any other derivatives based on such currency for the purpose of facilitating the possible misuse of such material nonpublic information.

Because market makers are already subject to the requirements of Rule 408(a) and because market makers do not have any trading or information advantage over other Members, the Exchange does not believe that it is necessary to separately require specific limitations on dealings between market makers and their affiliates. Deleting Rule 810 would provide market makers and Members with the flexibility to adapt their policies and procedures as reasonably designed to reflect changes to their business model, business activities, or the securities market in a manner similar to how Members on the Exchange currently operate and consistent with Rule 408(a). However, the Exchange notes that deleting Rule 810 does not obviate the need for reasonably designed information barriers in certain situations.

As noted above, PMMs and CMMs are distinguished under Exchange rules only to the extent that PMMs have heightened obligations and allocation guarantees. However, none of these heightened obligations provides different or greater access to non-public information than any other market participant on the Exchange.[10] Specifically, market makers on the Exchange do not have access to trading information provided by the Exchange, either at, or prior to, the point of execution, that is not made available to all other market participants on the Exchange in a similar manner. Further, as noted above, market makers on the Exchange do not have any agency responsibilities for orders on the order book. Accordingly, because market makers do not have any trading advantages at the Exchange due to their market role, the Exchange believes that they should be subject to the same rules as Members regarding the protection against the misuse of material, non-public information, which in this case, is existing Rule 408(a).

The Exchange notes that even with this proposed rule change, pursuant to Rule 408(a), a market maker would still be obligated to ensure that its policies and procedures reflect the current state of its business and continue to be reasonably designed to achieve compliance with applicable federal securities law and regulations, and with applicable Exchange rules, including being reasonably designed to protect against the misuse of material, non-public information. While information barriers would not specifically be required under the proposal, Rule 408(a) already requires that a Member consider its business model or business activities in structuring its policies and procedures, which may dictate that an information barrier or a functional separation be part of the set of policies and procedures that would be reasonably designed to achieve compliance with applicable securities law and regulations, and with applicable Exchange rules.

The Exchange is not proposing to change what is considered to be material, non-public information and, thus does not expect there to be any changes to the types of information that an affiliated brokerage business of a market maker could share with such market maker. In that regard, the proposed rule change will not permit the EAM unit of a member to have access to any non-public order or quote information of the affiliated market maker, including hidden or undisplayed size or price information of such orders and quotes. Market makers are not allowed to post hidden or undisplayed orders and quotes on the Exchange. Members do not expect to receive any additional order or quote information as a result of this proposed rule change.

Further, the Exchange does not believe that there will be any material change to member information barriers as a result of removal of the Exchange's pre-approval requirements. In fact, the Exchange anticipates that eliminating the pre-approval requirement should facilitate implementation of changes to member information barriers as necessary to protect against the misuse of material, non-public information. The Exchange also suggests that the pre-approval requirement is unnecessary because market makers do not have agency responsibilities to the book, or time and place information advantages because of their market role. However, as is the case today with market makers, information barriers of new entrants would be subject to review as part of a new firm application. Moreover, the policies and procedures of market makers, including those relating to information barriers, would be subject to review by FINRA, on behalf of the Exchange, pursuant to a Regulatory Services Agreement.

The Exchange further notes that under Rule 408(a), a Member would be able to structure its firm to provide for its options market makers, as applicable, to be structured with its equities and customer-facing businesses, provided that any such structuring would be done in a manner reasonably designed to protect against the misuse of material, non-public information. For example, pursuant to Rule 408(a) a market maker on the Exchange could be in the same independent trading unit, as defined in Rule 200(f) of Regulation SHO,[11] as an equities market maker and other trading desks within the firm, including options trading desks, so that the firm could share post-trade information to better manage its risk across related securities. The Exchange believes it is appropriate, and consistent with Rule 408(a) and Section 15(g) of the Act[12] for a firm to share options position and related hedging position information (*e.g.,* equities, futures, and foreign currency) within a firm to better manage risk on a firm-wide basis. The Exchange notes, however, that if so structured, a firm would need to have policies and procedures, including information barriers as applicable, reasonably designed to protect against the misuse of material, non-public information, and specifically customer information, consistent with Rule 408(a).

The Exchange believes that the proposed reliance on the principles-based Rule 408(a) would ensure that a Member that operates a market maker would be required to protect against the misuse of any material, non-public information. As noted above, Rule 408(a) already requires that firms refrain from trading while in possession of material, non-public information concerning imminent transactions in the security or related product. The Exchange believes that moving to a principles-based approach rather than prescribing how and when to wall off a market maker from the rest of the firm would provide Members operating as market makers with appropriate tools to better manage risk across a firm, including integrating options positions with other positions of the firm or, as applicable, by the respective independent trading unit. Specifically, the Exchange believes that it is appropriate for risk management

[10] *See* Rules 802(e) and 803.

[11] 17 CFR part 242.200(f).

[12] 15 U.S.C. 78o(g).

purposes for a member operating a market maker to be able to consider both options market makers traded positions for purposes of calculating net positions consistent with Rule 200 of Regulation SHO, calculating intra-day net capital positions, and managing risk both generally as well as in compliance with Rule 15c3–5 under the Act (the ''Market Access Rule'').[13] The Exchange notes that any risk management operations would need to operate consistent with the requirement to protect against the misuse of material, non-public information.

The Exchange further notes that if market makers are integrated with other market making operations, they would be subject to existing rules that prohibit Members from disadvantaging their customers or other market participants by improperly capitalizing on a member organization's access to the receipt of material, non-public information. As such, a member organization that integrates its market maker operations together with equity market making would need to protect customer information consistent with existing obligations to protect such information. The Exchange has rules prohibiting Members from disadvantaging their customers or other market participants by improperly capitalizing on the Members' access to or receipt of material, nonpublic information. For example, Rule 609 requires members to establish, maintain, enforce, and keep current a system of compliance and supervisory controls, reasonably designed to achieve compliance with applicable securities laws and Exchange rules. Additionally, Rule 400 prevents a person associated with a Member, who has knowledge of all material terms and conditions of (i) an order and a solicited order, (ii) an order being facilitated, or (iii) orders being crossed; the execution of which are imminent, to enter, based on such knowledge, an order to buy or sell an option for the same underlying security as any option that is the subject of the order, or an order to buy or sell the security underlying such class, or an order to buy or sell any related instrument unless certain circumstances are met.[14]

Additionally, the Exchange proposes to amend the text of Supplementary Material .06 to Rule 717 to match a recent change made by International Securities Exchange, LLC (''ISE'').[15] The Exchange further notes that the changes proposed in this filing to Rule 717 have no substantive effect on the rule—Members may still demonstrate that orders were entered without knowledge of a pre-existing order on the book represented by the same firm by providing evidence that effective information barriers between the persons, business units and/or systems entering the orders onto the Exchange were in existence at the time the orders were entered. The rule requires that such information barriers be fully documented and provided to the Exchange upon request.

(b) Basis

The Exchange believes that its proposal is consistent with Section 6(b) of the Act[16] in general, and furthers the objectives of Section 6(b)(5)[17] in particular, in that it is designed to prevent fraudulent and manipulative acts and practices, to promote just and equitable principles of trade, to remove impediments to and perfect the mechanism of a free and open market and a national market system, and, in general, to protect investors and the public interest.

The Exchange believes that the proposed rule change would remove impediments to and perfect the mechanism of a free and open market by adopting a principles based approach to permit a Member operating a market maker to maintain and enforce policies and procedures to, among other things, prohibit the misuse of material, non-public information and eliminate restrictions on how a Member structures its market making operations. The Exchange notes that the proposed rule change is based on an approved rule of the Exchange to which market makers are already subject—Rule 408(a)—and harmonizes the rules governing market makers and Members. Moreover, Members operating market makers would continue to be subject to federal and Exchange requirements for protecting material, non-public order information.[18] The Exchange believes that the proposed rule change would remove impediments to and perfect the mechanism of a free and open market because it would harmonize the Exchange's approach to protecting against the misuse of material, non-public information and no longer subject market makers to additional requirements. The Exchange does not believe that the existing requirements applicable to market makers are narrowly tailored to their respective roles because neither market participant has access to Exchange trading information in a manner different from any other market participant on the Exchange and they do not have agency responsibilities to the order book. Additionally, concerning Rule 717, the Exchange believes that appropriate information barriers can be used to demonstrate that the execution of two orders within one second was inadvertent because the orders were entered without knowledge of each other, will clarify the intent and application of Supplementary Material .06 to Rule 717.

The Exchange further believes the proposal is designed to prevent fraudulent and manipulative acts and practices and to promote just and equitable principles of trade because existing rules make clear to market makers and Members the type of conduct that is prohibited by the Exchange. While the proposal eliminates requirements relating to the misuse of material, non-public information, market makers and Members would remain subject to existing Exchange rules requiring them to establish and maintain systems to supervise their activities, and to create, implement, and maintain written procedures that are reasonably designed to comply with applicable securities laws and Exchange rules, including the prohibition on the misuse of material, non-public information.

The Exchange notes that the proposed rule change would still require that Members operating market makers maintain and enforce policies and procedures reasonably designed to ensure compliance with applicable federal securities laws and regulations and with Exchange rules. Even though there would no longer be pre-approval of market maker information barriers, any market maker's written policies and procedures would continue to be subject to oversight by the Exchange and therefore the elimination of prescribed restrictions should not reduce the effectiveness of the Exchange rules to protect against the misuse of material, non-public information. Rather, Members will be able to utilize a flexible, principles-based approach to modify their policies and procedures as appropriate to reflect changes to their business model, business activities, or to the securities market itself. Moreover, while specified information barriers may no longer be required, a Member's business model or business activities may dictate that an information barrier or functional separation be part of the set of policies and procedures that would be reasonably designed to achieve compliance with applicable

[13] 17 CFR part 240.15c3–5.

[14] .02 of Supplementary Material to Rule 400.

[15] *See* SR–ISE–2015–26 (notice pending publication in the **Federal Register**).

[16] 15 U.S.C. 78f(b).

[17] 15 U.S.C. 78f(b)(5).

[18] *See* 15 U.S.C. 78o(g) and Rule 408(a).

securities laws and regulations, and with applicable Exchange rules. The Exchange therefore believes that the proposed rule change will maintain the existing protection of investors and the public interest that is currently applicable to market makers, while at the same time removing impediments to and perfecting a free and open market by moving to a principles-based approach to protect against the misuse of material non-public information.

Finally, the Exchange believes that proposed rule change to Rule 717 is consistent with Section 6(b)(5) of the Act,[19] which requires the rules of an exchange to prevent fraudulent and manipulative acts and practices, promote just and equitable principles of trade, remove impediments to, and perfect the mechanism of, a free and open market and a national market system, and, in general, protect investors and the public interest. In particular, by continuing to specify that the information barriers must be fully documented, members will be better prepared to properly respond to requests for information by the Exchange in the course of a regulatory investigation. Moreover, while members are generally required to provide information to the Exchange as requested, continuing to specify that members must provide written documentation regarding information barriers within the context of this rule will assure that all members adhere to the existing standard for demonstrating compliance with the rule.

B. Self-Regulatory Organization's Statement on Burden on Competition

The Exchange does not believe that the proposed rule change will impose any burden on competition not necessary or appropriate in furtherance of the purposes of the Act. To the contrary, the Exchange believes that the proposal will enhance competition by allowing market makers to comply with applicable Exchange rules in a manner best suited to their business models, business activities, and the securities markets, thus reducing regulatory burdens while still ensuring compliance with applicable securities laws and regulations and Exchange rules. The Exchange believes that the proposal will foster a fair and orderly marketplace without being overly burdensome upon market makers.

Moreover, the Exchange believes that the proposed rule change would eliminate a burden on competition for Members which currently exists as a result of disparate rule treatment between the options and equities markets regarding how to protect against the misuse of material, non-public information. For those Members that are also members of equity exchanges, their respective equity market maker operations are now subject to a principles-based approach to protecting against the misuse of material non-public information.[20] The Exchange believes it would remove a burden on competition to enable Members to similarly apply a principles-based approach to protecting against the misuse of material, non-public information in the options space. To this end, the Exchange notes that Rule 408(a) still requires a Member that operates as a market maker on the Exchange to evaluate its business to assure that its policies and procedures are reasonably designed to protect against the misuse of material, non-public information. However, with this proposed rule change, a Member that trades equities and options could look at its firm more holistically to structure its operations in a manner that provides it with better tools to manage its risks across multiple security classes, while at the same time protecting against the misuse of material non-public information.

C. Self-Regulatory Organization's Statement on Comments on the Proposed Rule Change Received from Members, Participants or Others

The Exchange has not solicited, and does not intend to solicit, comments on this proposed rule change. The Exchange has not received any written comments from members or other interested parties.

III. Date of Effectiveness of the Proposed Rule Change and Timing for Commission Action

The Exchange believes that the foregoing proposed rule change may take effect upon filing with the Commission pursuant to Section19(b)(3)(A) of the Act and Rule 19b–4(f)(6) thereunder because the foregoing proposed rule change does not (i) significantly affect the protection of investors or the public interest, (ii) impose any significant burden on competition, and (iii) become operative for 30 days after its filing date, or such shorter time as the Commission may designate.

At any time within 60 days of the filing of the proposed rule change, the Commission summarily may temporarily suspend such rule change if it appears to the Commission that such action is: (i) Necessary or appropriate in the public interest; (ii) for the protection of investors; or (iii) otherwise in furtherance of the purposes of the Act. If the Commission takes such action, the Commission shall institute proceedings to determine whether the proposed rule should be approved or disapproved.

IV. Solicitation of Comments

Interested persons are invited to submit written data, views, and arguments concerning the foregoing, including whether the proposed rule change is consistent with the Act. Comments may be submitted by any of the following methods:

Electronic Comments

- Use the Commission's Internet comment form (*http://www.sec.gov/rules/sro.shtml*); or
- Send an email to *rule-comments@sec.gov*. Please include File Number SR–ISE Gemini-2015–14 on the subject line.

Paper Comments

- Send paper comments in triplicate to Brent J. Fields, Secretary, Securities and Exchange Commission, 100 F Street NE., Washington, DC 20549–1090.

All submissions should refer to File Number SR–ISE Gemini-2015–14. This file number should be included on the subject line if email is used. To help the Commission process and review your comments more efficiently, please use only one method. The Commission will post all comments on the Commission's Internet Web site (*http://www.sec.gov/rules/sro.shtml*). Copies of the submission, all subsequent amendments, all written statements with respect to the proposed rule change that are filed with the Commission, and all written communications relating to the proposed rule change between the Commission and any person, other than those that may be withheld from the public in accordance with the provisions of 5 U.S.C. 552, will be available for Web site viewing and printing in the Commission's Public

[19] 15 U.S.C. 78f(b)(5).

[20] *See* Securities Exchange Act Release Nos. 60604 (Sept. 2, 2009), 76 FR 46272 (Sept. 8, 2009) (SR–NYSEArca–2009–78) (Order approving elimination of NYSE Arca rule that required market makers to establish and maintain specifically prescribed information barriers, including discussion of NYSE Arca and Nasdaq rules) (''Arca Approval Order''); 61574 (Feb. 23, 2010), 75 FR 9455 (Mar. 2, 2010) (SR–BATS–2010–003) (Order approving amendments to BATS Rule 5.5 to move to a principles-based approach to protecting against the misuse of material, non-public information, and noting that the proposed change is consistent with the approaches of NYSE Arca and Nasdaq) (''BATS Approval Order''); and 72534 (July 3, 2014), 79 FR 39440 (July 10, 2014), SR–NYSE–2014–12) (Order approving amendments to NYSE Rule 98 governing designated market makers to move to a principles-based approach to prohibit the misuse of material non-public information) (''NYSE Approval Order'').

Reference Room, 100 F Street NE., Washington, DC 20549, on official business days between the hours of 10:00 a.m. and 3:00 p.m. Copies of the filing will also be available for inspection and copying at the principal office of the Exchange. All comments received will be posted without change; the Commission does not edit personal identifying information from submissions. You should submit only information that you wish to make available publicly. All submissions should refer to File Number SR–ISE Gemini-2015–14 and should be submitted on or before September 29, 2015.

For the Commission, by the Division of Trading and Markets, pursuant to delegated authority.[21]

Robert W. Errett,

Deputy Secretary.

[FR Doc. 2015–22493 Filed 9–4–15; 8:45 am]

BILLING CODE 8011–01–P

SECURITIES AND EXCHANGE COMMISSION

[Release No. 34–75800; File No. SR–NYSEARCA–2015–58]

Self-Regulatory Organizations; NYSE Arca, Inc.; Notice of Designation of a Longer Period for Commission Action on Proposed Rule Change Adopting New Equity Trading Rules Relating to Trading Halts, Short Sales, Limit Up-Limit Down, and Odd Lots and Mixed Lots To Reflect the Implementation of Pillar, the Exchange's New Trading Technology Platform

September 1, 2015.

On July 1, 2015, NYSE Arca, Inc. (the ''Exchange'' or ''NYSE Arca'') filed with the Securities and Exchange Commission (''Commission''), pursuant to Section 19(b)(1) of the Securities Exchange Act of 1934 (''Act'') [1] and Rule 19b–4 thereunder,[2] a proposed rule change adopting new equity trading rules relating to trading halts, short sales, limit up-limit down, and odd lots and mixed lots to reflect the implementation of Pillar, the Exchange's new trading technology platform. The proposed rule change was published for comment in the **Federal Register** on July 22, 2015.[3]

Section 19(b)(2) of the Act [4] provides that within 45 days of the publication of notice of the filing of a proposed rule change, or within such longer period up to 90 days as the Commission may designate if it finds such longer period to be appropriate and publishes its reasons for so finding or as to which the self-regulatory organization consents, the Commission shall either approve the proposed rule change, disapprove the proposed rule change, or institute proceedings to determine whether the proposed rule change should be disapproved. The 45th day for this filing is September 5, 2015. The Commission is extending this 45-day time period.

The Commission finds it appropriate to designate a longer period within which to take action on the proposed rule change, so that it has sufficient time to consider this proposed rule change.

Accordingly, the Commission, pursuant to Section 19(b)(2) of the Act,[5] designates October 20, 2015, as the date by which the Commission should either approve or disapprove, or institute proceedings to determine whether to disapprove, the proposed rule change (File No. SR–NYSEARCA–2015–58).

For the Commission, by the Division of Trading and Markets, pursuant to delegated authority.[6]

Robert W. Errett,

Deputy Secretary.

[FR Doc. 2015–22490 Filed 9–4–15; 8:45 am]

BILLING CODE 8011–01–P

[21] 17 CFR 200.30–3(a)(12).

[1] 15 U.S.C. 78s(b)(1).

[2] 17 CFR 240.19b–4.

[3] *See* Securities Exchange Act Release No. 75467 (July 16, 2015), 80 FR 43515.

[4] 15 U.S.C. 78s(b)(2).

[5] 15 U.S.C. 78s(b)(2).

[6] 17 CFR 200.30–3(a)(31).

DEPARTMENT OF TRANSPORTATION

National Highway Traffic Safety Administration

[Docket No. NHTSA–2015–0066; Notice 1]

Mitsubishi Motors North America, Inc., Receipt of Petition for Decision of Inconsequential Noncompliance

AGENCY: National Highway Traffic Safety Administration (NHTSA), Department of Transportation (DOT).

ACTION: Receipt of petition.

SUMMARY: Mitsubishi Motors North America, Inc. (MMNA), has determined that certain model year (MY) 2015 Mitsubishi Outlander Sport multipurpose passenger vehicles do not fully comply with paragraph S6 of Federal Motor Vehicle Safety Standard (FMVSS) No. 205, *Glazing Materials.* MMNA has filed an appropriate report dated June 4, 2015, pursuant to 49 CFR part 573, *Defect and Noncompliance Responsibility and Reports.*

DATES: The closing date for comments on the petition is October 8, 2015.

ADDRESSES: Interested persons are invited to submit written data, views, and arguments on this petition. Comments must refer to the docket and notice number cited at the beginning of this notice and submitted by any of the following methods:

- *Mail:* Send comments by mail addressed to: U.S. Department of Transportation, Docket Operations, M–30, West Building Ground Floor, Room W12–140, 1200 New Jersey Avenue SE., Washington, DC 20590.
- *Hand Deliver:* Deliver comments by hand to: U.S. Department of Transportation, Docket Operations, M–30, West Building Ground Floor, Room W12–140, 1200 New Jersey Avenue SE., Washington, DC 20590. The Docket Section is open on weekdays from 10 a.m. to 5 p.m. except Federal Holidays.
- *Electronically:* Submit comments electronically by: logging onto the Federal Docket Management System (FDMS) Web site at *http://www.regulations.gov/.* Follow the online instructions for submitting comments.

Comments may also be faxed to (202) 493–2251.

Comments must be written in the English language, and be no greater than 15 pages in length, although there is no limit to the length of necessary attachments to the comments. If comments are submitted in hard copy form, please ensure that two copies are provided. If you wish to receive confirmation that your comments were received, please enclose a stamped, self-addressed postcard with the comments. Note that all comments received will be posted without change to *http://www.regulations.gov,* including any personal information provided.

Documents submitted to a docket may be viewed by anyone at the address and times given above. The documents may also be viewed on the Internet at *http://www.regulations.gov* by following the online instructions for accessing the dockets. DOT's complete Privacy Act Statement is available for review in the **Federal Register** published on April 11, 2000, (65 FR 19477–78).

The petition, supporting materials, and all comments received before the close of business on the closing date indicated above will be filed and will be considered. All comments and supporting materials received after the closing date will also be filed and will be considered to the extent possible. When the petition is granted or denied, notice of the decision will be published in the **Federal Register** pursuant to the authority indicated below.

SUPPLEMENTARY INFORMATION:

I. *MMNA's Petition:* Pursuant to 49 U.S.C. 30118(d) and 30120(h) (see

implementing rule at 49 CFR part 556), MMNA submitted a petition for an exemption from the notification and remedy requirements of 49 U.S.C. Chapter 301 on the basis that this noncompliance is inconsequential to motor vehicle safety.

This notice of receipt of MMNA's petition is published under 49 U.S.C. 30118 and 30120 and does not represent any agency decision or other exercise of judgment concerning the merits of the petition.

II. *Vehicles Involved:* Affected are approximately 300 MY 2015 Mitsubishi Outlander Sport multipurpose passenger vehicles manufactured between December 8, 2014 and December 22, 2014.

III. *Noncompliance:* MMNA explains that the quarter panel window glazing installed in the subject vehicles were labeled with the manufacturer's model number ''M–66'', indicating a tempered glass construction and ''AS2'', incorrectly indicating the glass is relatively transparent (light transmission of at least 70%). The correct manufacturer's model number, which should have been affixed to the quarter panel glass window, is ''M–131'' (which corresponds to a tempered ''privacy'' glass construction and a light transmission of 25%).

IV. *Rule Text:* Paragraph S6 of FMVSS No. 205 requires in pertinent part:

S6 Tire Markings. Except as specified in paragraphs, each tire shall be marked on each sidewall with the information specified in paragraphs (a) through (j) of this section. . .

V. *Summary of MMNA's Analyses:* MMNA stated its belief that the subject noncompliance is inconsequential to motor vehicle safety for the following reasons:

(A) MMNA stated that the quarter panel glass windows otherwise meet all other marking and performance requirements of FMVSS No. 205.

(B) MMNA believes that because the affected glazing fully meets all of the applicable performance requirements, the absence of the correct ''M'' number in their monogram has no effect upon the degree of driver visibility or the possibility of occupants being thrown through the vehicle windows in a collision.

(C) MMNA stated its belief that NHTSA has previously granted inconsequential noncompliance petitions regarding what it believes are similar noncompliances.

(D) MMNA is not aware of any crashes, injuries, customer complaints or field reports associated with this condition.

In summation, MMNA believes that the described noncompliance of the subject vehicles is inconsequential to motor vehicle safety, and that its petition, to exempt MMNA from providing recall notification of noncompliance as required by 49 U.S.C. 30118 and remedying the recall noncompliance as required by 49 U.S.C. 30120 should be granted.

NHTSA notes that the statutory provisions (49 U.S.C. 30118(d) and 30120(h)) that permit manufacturers to file petitions for a determination of inconsequentiality allow NHTSA to exempt manufacturers only from the duties found in sections 30118 and 30120, respectively, to notify owners, purchasers, and dealers of a defect or noncompliance and to remedy the defect or noncompliance. Therefore, any decision on this petition only applies to the subject vehicles that MMNA no longer controlled at the time it determined that the noncompliance existed. However, any decision on this petition does not relieve vehicle distributors and dealers of the prohibitions on the sale, offer for sale, or introduction or delivery for introduction into interstate commerce of the noncompliant vehicles under their control after MMNA notified them that the subject noncompliance existed.

Authority: (49 U.S.C. 30118, 30120: delegations of authority at 49 CFR 1.95 and 501.8)

Jeffrey Giuseppe,

Director, Office of Vehicle Safety Compliance.

[FR Doc. 2015–22572 Filed 9–4–15; 8:45 am]

BILLING CODE 4910–59–P

DEPARTMENT OF TRANSPORTATION

National Highway Traffic Safety Administration

[Docket No. NHTSA–2014–0034; Notice 1]

Maserati S.p.A and Maserati North America, Inc., Receipt of Petition for Decision of Inconsequential Noncompliance

AGENCY: National Highway Traffic Safety Administration (NHTSA), Department of Transportation (DOT).

ACTION: Receipt of Petition.

SUMMARY: Maserati S.p.A and Maserati North America, Inc. (collectively referred to as ''MNA'') has determined that certain MY 2011–2014 Maserati passenger vehicles do not fully comply with paragraph S4.4(c)(2), of Federal Motor Vehicle Safety Standard (FMVSS) No. 138, *Tire Pressure Monitoring Systems.* MNA has filed an appropriate report dated March 3, 2014, pursuant to 49 CFR part 573, *Defect and Noncompliance Responsibility and Reports.*

DATES: The closing date for comments on the petition is October 8, 2015.

ADDRESSES: Interested persons are invited to submit written data, views, and arguments on this petition. Comments must refer to the docket and notice number cited at the beginning of this notice and submitted by any of the following methods:

- Mail: Send comments by mail addressed to: U.S. Department of Transportation, Docket Operations, M–30, West Building Ground Floor, Room W12–140, 1200 New Jersey Avenue SE., Washington, DC 20590.
- Hand Deliver: Deliver comments by hand to: U.S. Department of Transportation, Docket Operations, M–30, West Building Ground Floor, Room W12–140, 1200 New Jersey Avenue SE., Washington, DC 20590. The Docket Section is open on weekdays from 10 a.m. to 5 p.m. except Federal Holidays.
- Electronically: Submit comments electronically by: logging onto the Federal Docket Management System (FDMS) Web site at *http://www.regulations.gov/.* Follow the online instructions for submitting comments. Comments may also be faxed to (202) 493–2251.

Comments must be written in the English language, and be no greater than 15 pages in length, although there is no limit to the length of necessary attachments to the comments. If comments are submitted in hard copy form, please ensure that two copies are provided. If you wish to receive confirmation that your comments were received, please enclose a stamped, self-addressed postcard with the comments. Note that all comments received will be posted without change to *http://www.regulations.gov,* including any personal information provided.

Documents submitted to a docket may be viewed by anyone at the address and times given above. The documents may also be viewed on the Internet at *http://www.regulations.gov* by following the online instructions for accessing the dockets. DOT's complete Privacy Act Statement is available for review in the **Federal Register** published on April 11, 2000, (65 FR 19477–78).

The petition, supporting materials, and all comments received before the close of business on the closing date indicated above will be filed and will be considered. All comments and supporting materials received after the closing date will also be filed and will be considered to the extent possible. When the petition is granted or denied, notice of the decision will be published in the **Federal Register** pursuant to the authority indicated below.

SUPPLEMENTARY INFORMATION:

I. MNA's Petition

Pursuant to 49 U.S.C. 30118(d) and 30120(h) and the rule implementing those provisions at 49 CFR part 556, MNA submitted a petition for an exemption from the notification and remedy requirements of 49 U.S.C. Chapter 301 on the basis that this noncompliance is inconsequential to motor vehicle safety.

This notice of receipt of MNA's petition is published under 49 U.S.C. 30118 and 30120 and does not represent any agency decision or other exercise of judgment concerning the merits of the petition.

II. Vehicles Involved

Affected are approximately 8,789 MY 2011–2013 Maserati Quattroporte and 2011–2014 Maserati Granturismo/Granturismo Convertible passenger vehicles.

III. Noncompliance

MNA explains that the noncompliance is that when the vehicle's TPMS detects a missing or inactive wheel sensor the vehicles do not fully comply with paragraph S4.4(c)(2) of FMVSS No. 138 because the malfunction indicator does not always illuminate as required.

Specifically, after the car's ignition is switched to the on position, the TPMS immediately seeks to confirm if all wheel sensors are present. If the TPMS then detects a sensor is not present, an internal timer is started. If the sensor detected as missing was also detected as missing during the previous ignition cycle, and the engine is not restarted, then the TPMS malfunction indicator will illuminate as required to indicate a hardware fault is still present. If the engine is then started and left in its steady state (engine not cold) idle, the warning lamp will continue to remain illuminated as required. However, if the car is then driven, the warning lamp will extinguish [in violation of the standard] as the system prepares to confirm that all wheel sensors are fitted to the vehicle. Once the vehicle has been moving above 22 mph for a period of 15 seconds the TPMS will seek to confirm that all wheel sensors are fitted to the vehicle. If the internal timer reaches 160 seconds, and the vehicle has been moving above 22 mph for 15 seconds, the TPMS malfunction indicator will illuminate correctly. Once the malfunction indicator is illuminated, it remains so throughout that ignition cycle, regardless of the vehicle's speed.

Rule Text: Paragraph S4.4(c)(2) of FMVSS No. 138 requires in pertinent part:

S4.4 *TPMS Malfunction.*

(c) *Combination low tire pressure/TPMS malfunction telltale.* The vehicle meets the requirements of S4.4(a) when equipped with a combined Low Tire Pressure/TPMS malfunction telltale that:

(2) Flashes for a period of at least 60 seconds but no longer than 90 seconds upon detection of any condition specified in S4.4(a) after the ignition locking system is activated to the ''On'' (''Run'') position. After each period of prescribed flashing, the telltale must remain continuously illuminated as long as a malfunction exists and the ignition locking system is in the ''On'' (''Run'') position. This flashing and illumination sequence must be repeated each time the ignition locking system is placed in the ''On'' (''Run'') position until the situation causing the malfunction has been corrected . . .

V. Summary of MNA's Analyses

MNA stated its belief that the subject noncompliance is inconsequential to motor vehicle safety for the following reasons:

(A) MNA states that the malfunction indicator will illuminate no later than 160 seconds after the vehicle's ignition is switched on, and the car has traveled above 22 mph for at least 15 seconds.

(B) MNA also states that if the TPMS fails to detect the wheel sensors, the TPMS will display on the TPMS pressures screen contained within the instrument cluster no value for the tire pressure, indicating that the status of the wheel sensor is unconfirmed.

(C) MNA further stated that the primary function of the TPMS is not affected by the noncompliance and the vehicle will operate as intended. Adding, that the noncompliance is confined to one particular aspect of the functionality of an otherwise compliant TPMS malfunction indicator and that all other aspects of the low-pressure monitoring system functionality are fully compliant with the requirements of FMVSS No. 138. Along with this argument, MNA also made mention that on April 8, 2005, NHTSA published a rule where it states ''A TPMS malfunction does not itself represent a safety risk to vehicle occupants, and we expect that the chances of having a TPMS malfunction and a significantly under-inflated tire at the same time are unlikely.''

(D) MNA says that NHTSA has previously granted petitions for Inconsequential Non-Compliances pertaining to FMVSS No. 138, Tire Pressure Monitoring System (TPMS), in which the monitoring system would not illuminate in the manner required by FMVSS No. 138 due to a software malfunction.

(E) MNA is not aware of any customer complaints, field communications, incidents or injuries related to this condition.

MNA has additionally informed NHTSA that all unsold vehicles in MNA's custody and control will have a reprogramming of the TPMS Electronic Control Unit prior to sale.

In summation, MNA believes that the described noncompliance of the subject vehicles is inconsequential to motor vehicle safety, and that its petition, to exempt MNA from providing recall notification of noncompliance as required by 49 U.S.C. 30118 and remedying the recall noncompliance as required by 49 U.S.C. 30120 should be granted.

NHTSA notes that the statutory provisions (49 U.S.C. 30118(d) and 30120(h)) that permit manufacturers to file petitions for a determination of inconsequentiality allow NHTSA to exempt manufacturers only from the duties found in sections 30118 and 30120, respectively, to notify owners, purchasers, and dealers of a defect or noncompliance and to remedy the defect or noncompliance. Therefore, any decision on this petition only applies to the subject vehicles that MNA no longer controlled at the time it determined that the noncompliance existed. However, any decision on this petition does not relieve vehicle distributors and dealers of the prohibitions on the sale, offer for sale, or introduction or delivery for introduction into interstate commerce of the noncompliant vehicles under their control after MNA notified them that the subject noncompliance existed.

Authority: 49 U.S.C. 30118, 30120: delegations of authority at 49 CFR 1.95 and 501.8.

Jeffrey Giuseppe,

Director, Office of Vehicle Safety Compliance.

[FR Doc. 2015–22569 Filed 9–4–15; 8:45 am]

BILLING CODE 4910–59–P

DEPARTMENT OF TRANSPORTATION

National Highway Traffic Safety Administration

[Docket No. NHTSA–2015–0074; Notice 1]

Baby Jogger, LLC, Receipt of Petition for Decision of Inconsequential Noncompliance

AGENCY: National Highway Traffic Safety Administration (NHTSA), Department of Transportation (DOT).

ACTION: Receipt of petition.

SUMMARY: Baby Jogger, LLC (Baby Jogger), has determined that certain Baby Jogger rear-facing infant seats and bases do not fully comply with paragraphs S5.5, S5.6, S5.8, and S8.1 of Federal Motor Vehicle Safety Standard (FMVSS) No. 213, *Child Restraint Systems.* Baby Jogger has filed an appropriate report dated June 4, 2015, pursuant to 49 CFR part 573, *Defect and Noncompliance Responsibility and Reports.*

DATES: The closing date for comments on the petition is October 8, 2015.

ADDRESSES: Interested persons are invited to submit written data, views, and arguments on this petition. Comments must refer to the docket and notice number cited at the beginning of this notice and submitted by any of the following methods:

- Mail: Send comments by mail addressed to: U.S. Department of Transportation, Docket Operations, M–30, West Building Ground Floor, Room W12–140, 1200 New Jersey Avenue SE., Washington, DC 20590.
- Hand Deliver: Deliver comments by hand to: U.S. Department of Transportation, Docket Operations, M–30, West Building Ground Floor, Room W12–140, 1200 New Jersey Avenue SE., Washington, DC 20590. The Docket Section is open on weekdays from 10 a.m. to 5 p.m. except Federal Holidays.
- Electronically: Submit comments electronically by: logging onto the Federal Docket Management System (FDMS) Web site at *http://www.regulations.gov/*. Follow the online instructions for submitting comments.

Comments may also be faxed to (202) 493–2251.

Comments must be written in the English language, and be no greater than 15 pages in length, although there is no limit to the length of necessary attachments to the comments. If comments are submitted in hard copy form, please ensure that two copies are provided. If you wish to receive confirmation that your comments were received, please enclose a stamped, self-addressed postcard with the comments. Note that all comments received will be posted without change to *http://www.regulations.gov,* including any personal information provided.

Documents submitted to a docket may be viewed by anyone at the address and times given above. The documents may also be viewed on the Internet at *http://www.regulations.gov* by following the online instructions for accessing the dockets. DOT's complete Privacy Act Statement is available for review in the **Federal Register** published on April 11, 2000, (65 FR 19477–78).

The petition, supporting materials, and all comments received before the close of business on the closing date indicated below will be filed and will be considered. All comments and supporting materials received after the closing date will also be filed and will be considered to the extent possible. When the petition is granted or denied, notice of the decision will be published in the **Federal Register** pursuant to the authority indicated below.

SUPPLEMENTARY INFORMATION:

I. Overview

Pursuant to 49 U.S.C. 30118(d) and 30120(h) (see implementing rule at 49 CFR part 556), Baby Jogger submitted a petition for an exemption from the notification and remedy requirements of 49 U.S.C. Chapter 301 on the basis that this noncompliance is inconsequential to motor vehicle safety.

This notice of receipt of Baby Jogger's petition is published under 49 U.S.C. 30118 and 30120 and does not represent any agency decision or other exercise of judgment concerning the merits of the petition.

II. Child Restraints Involved

Affected are approximately 15,103 of the following Baby Jogger rear-facing infant seats and bases manufactured between November 3, 2014 and April 30, 2015:

- City GO Infant Car Seat/Model No. BJ64510
- City GO Infant Car Seat/Model No. BJ64529
- City GO Base for Infant Car Seat/Model No. BJ80400
- City GO Base for Infant Car Seat/Model No. BJ61500
- City Mini Infant Cars Seat/Stroller Travel System/Model No.BJ72510
- Vue Lite Infant Car Seat/Stroller Travel System/Model No. BJ70411
- Vue Lite Infant Car Seat/Stroller Travel System/Model No. BJ70424
- Vue Lite Infant Car Seat/Stroller Travel System/Model No. BJ70431

III. Noncompliances

Baby Jogger explains that the affected child restraints do not fully comply with the numerous paragraphs of FMVSS No. 213 for the following reasons:

Paragraph S5.5.2—The required information in English is no smaller than 10 point type, but the Spanish information is smaller at about 7 point type. This only applies to models BJ64510 and BJ64529.

Paragraph S5.5.2(d)—The ''manufactured in address'' on the label is in about 8 font which is smaller than the required 10 point type.

Paragraph S5.5.2(m)—The required ''Child restraints could be recalled for safety reasons . . .'' text is on a black background with white text instead of black text on a white background.

Paragraph S5.5.2(g)(1)—The label has the ''Follow all instructions. . .'' ahead of the ''Secure this child restraint statement . . .'' instead of the reverse order as required. This noncompliance only affects models BJ64510 and BJ64529.

Paragraph S5.5.2(n)—The label has ''This child restraint is certified for use in motor vehicles and aircraft.'' Other than the first word, no words other words are capitalized.

Paragraph S5.5.2.(k)(3)(ii)—The message area measures 23.4 square cm on models BJ70411, BJ70424 and BJ70431 which is less than the minimum required message area of 30 square cm.

Paragraph S5.5.2.(k)(3)(iii)—On models BJ70411, BJ70424 and BJ70431 the red circle on the required pictogram is 29mm in diameter which is less than the required 30mm in diameter.

Paragraph S5.6.1.7—The instruction manuals do not include reference to the required Web site in the section regarding child restraint recalls.

Paragraph S5.6.3—The instruction manuals do not include the required statement ''A snug strap should not allow any slack . . .''

Paragraph S5.8.2(a)(1)—The electronic registration form does not have the required statement ''FOR YOUR CHILD'S CONTINUED SAFETY . . .''

Paragraph S5.8.1(b)(2)—Figure 9a requires minimum 10% screen tint on the lower half of the form. The form is missing the required tinting.

Paragraph S8.1—No instructions for installing the system in an aircraft passenger seat were provided.

IV. Summary of Baby Jogger's Analyses

Baby Jogger organized its reasoning to substantiate inconsequentiality into the following five groupings that it believes are similar issues between the numerous noncompliances:

a. Information Type Size/Capitalization/Presentation order
b. Background color
c. On-Product Label Message Area and Pictogram Sizes
d. Omitted Information
e. Spanish Language Type Size

Refer to Baby Jogger's petition for their complete reasoning and associated

illustrations. To view the petition and all supporting documents log onto the Federal Docket Management System (FDMS) Web site at: *http://www.regulations.gov/*. Then follow the online search instructions to locate docket number ''NHTSA–2015–0074.''

Baby Jogger additionally informed NHTSA that they have corrected all labeling noncompliances and that all future productions of the infant car seat/stroller systems and stand-alone units will be in full compliance with FMVSS No. 213.

In summation, Baby Jogger believes that the described noncompliance of the subject infant car seat/stroller systems and standalone units is inconsequential to motor vehicle safety, and that its petition, to exempt Baby Jogger from providing recall notification of noncompliance as required by 49 U.S.C. 30118 and remedying the recall noncompliance as required by 49 U.S.C. 30120 should be granted.

NHTSA notes that the statutory provisions (49 U.S.C. 30118(d) and 30120(h)) that permit manufacturers to file petitions for a determination of inconsequentiality allow NHTSA to exempt manufacturers only from the duties found in sections 30118 and 30120, respectively, to notify owners, purchasers, and dealers of a defect or noncompliance and to remedy the defect or noncompliance. Therefore, any decision on this petition only applies to the subject child restraints that Baby Jogger no longer controlled at the time it determined that the noncompliance existed. However, any decision on this petition does not relieve child restraint distributors and dealers of the prohibitions on the sale, offer for sale, or introduction or delivery for introduction into interstate commerce of the noncompliant child restraints under their control after Baby Jogger notified them that the subject noncompliance existed.

Authority: 49 U.S.C. 30118, 30120: delegations of authority at 49 CFR 1.95 and 501.8.

Jeffrey Giuseppe,

Director, Office of Vehicle Safety Compliance.

[FR Doc. 2015–22573 Filed 9–4–15; 8:45 am]

BILLING CODE 4910–59–P

DEPARTMENT OF TRANSPORTATION

Surface Transportation Board

[Docket No. FD 34075]

Six County Association of Governments—Construction and Operation Exemption—A Rail Line Between Levan and Salina, Utah

AGENCY: Surface Transportation Board, DOT.

ACTION: Notice of construction and operation exemption.

SUMMARY: The Board is granting an exemption under 49 U.S.C. 10502 from the prior approval requirements of 49 U.S.C. 10901 for Six County Association of Governments (Six County) to construct and operate a new line of railroad between Salina, Utah, and a connection with an existing line of the Union Pacific Railroad Company near Juab, Utah. The rail line would provide an alternative rail service option to local industries, particularly the Southern Utah Fuel Company coal mine located about 30 miles northeast of Salina. This exemption is subject to environmental mitigation conditions.

DATES: The exemption will be effective on October 3, 2015; petitions for reconsideration must be filed by September 23, 2015.

ADDRESSES: An original and 10 copies of all pleadings, referring to Docket No. FD 34075 must be filed with the Surface Transportation Board, 395 E Street SW., Washington DC 20423–0001. In addition, one copy of each filing in this proceeding must be served on petitioner's representative: Sandra L. Brown, Thompson Hine LLP, 1919 M Street NW., Suite 700, Washington, DC 20036–1600.

FOR FURTHER INFORMATION CONTACT: Nathaniel Bawcombe, (202) 245–0376. (Assistance for the hearing impaired is available through the Federal Information Relay Service (FIRS) at: (800) 877–8339). Copies of written filings will be available for viewing and self-copying at the Board's Public Docket Room, Room 131, and will be posted to the Board's Web site.

SUPPLEMENTARY INFORMATION: Additional information is contained in the Board's decision. Board decisions and notices are available on our Web site at ''*WWW.STB.DOT.GOV.*''

By the Board, Chairman Elliott, Vice Chairman Begeman, and Commissioner Miller.

Decided: August 31, 2015.

Kenyatta Clay,

Clearance Clerk.

[FR Doc. 2015–22537 Filed 9–4–15; 8:45 am]

BILLING CODE 4915–01–P

DEPARTMENT OF TRANSPORTATION

Surface Transportation Board

Information Collection Activities: Statutory Licensing and Consolidation Authority

AGENCY: Surface Transportation Board, DOT.

ACTION: 30-day notice and request for comments.

SUMMARY: As part of its continuing effort to reduce paperwork burdens, and as required by the Paperwork Reduction Act of 1995, 44 U.S.C. 3501–3519 (PRA), the Surface Transportation Board (Board) gives notice that it is requesting from the Office of Management and Budget (OMB) approval of an extension of the information collection—Statutory Licensing and Consolidation Authority—further described below. The Board previously published a notice about this collection in the **Federal Register**. 80 FR 38,508 (July 6, 2015). That notice allowed for a 60-day public review and comment period. One comment was received and is addressed in the agency's submission to OMB as part of this approval process.

Under 49 U.S.C. 10901–03 and §§ 11323–26, rail carriers and non-carriers are required to file an application with the Board, or seek an exemption (through petition or notice) from the full application process under § 10502, before they may construct, acquire, or operate a line of railroad; abandon or discontinue operations over a line of railroad; or consolidate their interests through a merger or common-control arrangement. (The relevant information collections are described in more detail below.)

Comments are requested concerning: (1) The accuracy of the Board's burden estimates; (2) ways to enhance the quality, utility, and clarity of the information collected; (3) ways to minimize the burden of the collection of information on the respondents, including the use of automated collection techniques or other forms of information technology, when appropriate; and (4) whether the collection of information is necessary for the proper performance of the functions of the Board, including whether the collection has practical utility.

Description of Collections

Title: Statutory Licensing and Consolidation Authority.

OMB Control Number: 2140–0023.

STB Form Number: None.

Type of Review: Extension without change.

Respondents: Rail carriers and non-carriers seeking statutory licensing or consolidation authority or an exemption from filing an application for such authority.

Number of Respondents: 74.[1]

Frequency: On occasion.

TABLE—NUMBER OF RESPONSES IN FY 2011

Type of filing	Number of filings under 49 U.S.C. 10901–03 and 11323–26
Applications	2
Petitions*	18
Notices*	103

* Under § 10502, petitions for exemption and notices of exemption are permitted in lieu of an application.

Total Burden Hours (annually including all respondents): 4,049 hours (sum total of estimated hours per response × number of responses for each type of filing).

TABLE—ESTIMATED HOURS PER RESPONSE

Type of filing	Number of hours per response under 49 U.S.C. 10901–03 and 11323–26
Applications	524
Petitions	58
Notices	19

Total Annual ''Non-hour Burden'' Cost: Approximately $1,537.50 (sum total of the cost per response × number of responses for each type of filing). Filings are submitted electronically to the Board; so there is no cost for filing with the Board. However, respondents are sometimes required, as part of this collection, to send letters to certain governmental agencies notifying them of the proposed action being sought before the Board. (Copies of these letters are part of an environmental and historic report that is sometimes required as part of this collection.) Because some of these agencies may require hard copy letters, there may be some limited mailing costs, which we have estimated at approximately $12.50 per response.

Needs and Uses: Under the Interstate Commerce Act, as amended by the ICC Termination Act of 1995, Public Law 104–88, 109 Stat. 803 (1995), persons seeking to construct, acquire or operate a line of railroad and railroads seeking to abandon or to discontinue operations over a line of railroad or, in the case of two or more railroads, to consolidate their interests through merger or a common-control arrangement are required to file an application for prior approval and authority with the Board. *See* 49 U.S.C. 10901–03 and 11323–26. Under 49 U.S.C. 10502, persons may seek an exemption from many of the application requirements of §§ 10901–03 and 11323–26 by filing with the Board a petition for exemption or notice of exemption in lieu of an application. The collection by the Board of these applications, petitions, and notices enables the Board to meet its statutory duty to regulate the referenced rail transactions. *See Table—Statutory and Regulatory Provisions* below.

Retention Period: Information in these collections is maintained by the Board for ten years, after which it is transferred to the National Archives as permanent records.

DATES: Comments on this information collection should be submitted by October 8, 2015.

ADDRESSES: Written comments should be identified as ''Paperwork Reduction Act Comments, Surface Transportation Board, Statutory Licensing and Consolidation Authority.'' These comments should be directed to the Office of Management and Budget, Office of Information and Regulatory Affairs, Attention: Chandana L. Achanta, Surface Transportation Board Desk Officer, by email at *OIRA_SUBMISSION@OMB.EOP.GOV;* by fax at (202) 395–6974; or by mail to Room 10235, 725 17th Street NW., Washington, DC 20503.

FOR FURTHER INFORMATION CONTACT: For further information regarding the Statutory Licensing and Consolidation Authority, contact Chris Oehrle, Surface Transportation Board, via mail at 395 E Street SW., Washington, DC 20423–0001, telephone at (202) 245–0271, or email at *PRA@stb.dot.gov.* [Federal Information Relay Service (FIRS) for the hearing impaired: (800) 877–8339.]

SUPPLEMENTARY INFORMATION: Under §§ 10901–03 and 11323–26, an application must be filed to seek authority under these sections, but an applicant may file a petition or notice pursuant to an exemption under 49 U.S.C. 10502. Respondents seeking authority from the Board under these provisions must submit certain information required under the Board's related regulations. The table below shows the statutory and regulatory provisions under which the Board requires the information collections that are the subject of this notice.

TABLE—STATUTORY AND REGULATORY PROVISIONS*

Certificate required	Statutory provision	Regulations
Construct, Acquire, or Operate Railroad Lines	49 U.S.C. 10901	49 CFR pt. 1150.
Short Line purchases by Class II and Class III Rail Carriers	49 U.S.C. 10902	49 CFR 1150.41–45.
Abandonments and Discontinuances	49 U.S.C. 10903	49 CFR pt. 1152.
Railroad Acquisitions, Trackage Rights, and Leases	49 U.S.C. 11323–26	49 CFR pt. 1180.

* STB regulations may be viewed on the STB Web site under E-Library > Reference: STB Rules (*http://www.stb.dot.gov/stb/elibrary/ref_stbrules.html*).

Under the PRA, a federal agency conducting or sponsoring a collection of information must display a currently valid OMB control number. A collection of information, which is defined in 44 U.S.C. 3502(3) and 5 CFR 1320.3(c), includes agency requirements or requests that persons submit reports, keep records, or provide information to the agency, third parties, or the public. Section 3507(b) of the PRA requires, concurrent with an agency's submitting a collection to OMB for approval, a 30-day notice and comment period through publication in the **Federal Register** concerning each proposed collection of information, including each proposed

[1] Approximately 40% of the filings were additional filings submitted by railroads that had already submitted filings during the time period. Therefore, the number of respondents (74) is approximately 40% less than the number of filings (123).

extension of an existing collection of information.

Dated: September 2, 2015.

Jeffrey Herzig,

Clearance Clerk.

[FR Doc. 2015–22521 Filed 9–4–15; 8:45 am]

BILLING CODE 4915–01–P

DEPARTMENT OF TRANSPORTATION

Surface Transportation Board

Information Collection Activities: Statutory Authority To Preserve Rail Service (49 U.S.C. 10904–05 and 10907, and 16 U.S.C. 1247(d))

AGENCY: Surface Transportation Board, DOT.

ACTION: 30-day notice and request for comments.

SUMMARY: As part of its continuing effort to reduce paperwork burdens, and as required by the Paperwork Reduction Act of 1995, 44 U.S.C. 3501–3519 (PRA), the Surface Transportation Board (Board) gives notice that it is requesting from the Office of Management and Budget (OMB) approval of an extension of the information collection—Statutory Authority to Preserve Rail Service—further described below. The Board previously published a notice about this collection in the **Federal Register**. 80 FR 38509 (July 6, 2015). That notice allowed for a 60-day public review and comment period. No comments were received.

Under these statutory provisions, the Board administers programs designed to preserve railroad service or rail rights-of-way. When a line is proposed for abandonment, affected shippers, communities, or other interested persons may seek to preserve rail service by filing with the Board: an offer of financial assistance (OFA) to subsidize or purchase a rail line for which a railroad is seeking abandonment (49 U.S.C. 10904), including a request for the Board to set terms and conditions of the financial assistance; a request for a public use condition (§ 10905); or a trail-use request (16 U.S.C. 1247(d)). Similarly, when a line is placed on a system diagram map identifying it as an anticipated or potential candidate for abandonment, affected shippers, communities, or other interested persons may seek to preserve rail service by filing with the Board a feeder line application to purchase the identified rail line (§ 10907). When a line is so placed on the map, the feeder line applicant need not demonstrate that the public convenience and necessity require or permit the sale of the line, but need only pay the constitutional minimum value to acquire it. Additionally, the railroad owning the rail line subject to abandonment must, in some circumstances, provide information to the applicant or offeror. The relevant information collections are described in more detail below.

Comments are requested concerning: (1) The accuracy of the Board's burden estimates; (2) ways to enhance the quality, utility, and clarity of the information collected; (3) ways to minimize the burden of the collection of information on the respondents, including the use of automated collection techniques or other forms of information technology when appropriate; and (4) whether the collection of information is necessary for the proper performance of the functions of the Board, including whether the collection has practical utility.

Description of Collections

Title: Statutory Authority to Preserve Rail Service.

OMB Control Number: 2140–0022.

STB Form Number: None.

Type of Review: Extension without change.

Respondents: Affected shippers, communities, or other interested persons seeking to preserve rail service over rail lines that are proposed or identified for abandonment, and railroads that are required to provide information to the offeror or applicant.

Number of Respondents: 40 (including informational filings required of railroads).

Frequency: On occasion.

TABLE—NUMBER OF YEARLY RESPONSES

Type of filing	Number of filings
Offer of Financial Assistance	1
OFA—Railroad Reply to Request for Information	2
OFA—Request to Set Terms and Conditions	1
Request for Public Use Condition	1
Feeder Line Application	1
Trail-Use Request	27
Trail-Use Request Extension	[1] 24

Total Burden Hours (annually including all respondents): 368 hours (sum total of estimated hours per response × number of responses for each type of filing).

TABLE—ESTIMATED HOURS PER RESPONSE

Type of filing	Number of hours per response
Offer of Financial Assistance	32
OFA—Railroad Reply to Request for Information	10
OFA—Request to Set Terms and Conditions	[2] 40
Request for Public Use Condition	2
Feeder Line Application	70
Trail-Use Request	4
Trail-Use Request Extension	4

Total "Non-hour Burden" Cost: None identified. Filings are submitted electronically to the Board.

Needs and Uses: Under the Interstate Commerce Act, as amended by the ICC Termination Act of 1995, Public Law 104–88, 109 Stat. 803 (1995), and Section 8(d) of the National Trails System Act, 16 U.S.C. 1247(d) (Trails Act), persons seeking to preserve rail service may file pleadings before the Board to acquire or subsidize a rail line for continued service, or to impose a trail use or public use condition. Under 49 U.S.C. 10904, the filing of an OFA starts a process of negotiations to define the financial assistance needed to purchase or subsidize the rail line sought for abandonment. Once the OFA is filed, the offeror may request additional information from the railroad, which the railroad must provide. If the parties cannot agree to the sale or subsidy, either party also may file a request for the Board to set the terms and conditions of the financial assistance. Under § 10905, a public use request allows the Board to impose a 180-day public use condition on the abandonment of a rail line, permitting the parties to negotiate a public use for the rail line. Under § 10907, a feeder line application provides the basis for authorizing an involuntary sale of a rail line. Finally, under 16 U.S.C. 1247(d), a trail-use request, if agreed upon by the abandoning carrier, requires the Board to condition the abandonment by issuing a Notice of Interim Trail Use (NITU) or Certificate of Interim Trail Use (CITU), permitting the parties to

[1] In the 60-day notice for this collection, the Board estimated that the number of Trail-Use Request Extensions would be 94, but, upon further review, staff has revised the number to 24 because staff believes that number more accurately reflects the annual number of this type of filing.

[2] In the 60-day notice, the Board used four hours for the estimated hours for filing of an "OFA-Request to Set Terms and Conditions," but, upon review, staff updated this amount to more accurately reflect the hourly burden for this filing, estimating it to be 40 hours rather than four. Therefore, this notice updates those burden hours.

negotiate an interim trail use/rail banking agreement for the rail line.

The collection by the Board of these offers, requests, and applications, and the railroad's replies (when required), enables the Board to meet its statutory duty to regulate the referenced rail transactions.

Retention Period: Information in these collections is maintained by the Board for ten years, after which it is transferred to the National Archives as permanent records.

DATES: Comments on this information collection should be submitted by October 8, 2015.

ADDRESSES: Written comments should be identified as ''Paperwork Reduction Act Comments, Surface Transportation Board, Statutory Authority to Preserve Rail Service.'' These comments should be directed to the Office of Management and Budget, Office of Information and Regulatory Affairs, Attention: Chandana L. Achanta, Surface Transportation Board Desk Officer, by email at *OIRA_SUBMISSION@OMB.EOP.GOV*; by fax at (202) 395–6974; or by mail to Room 10235, 725 17th Street NW., Washington, DC 20503.

FOR FURTHER INFORMATION CONTACT: For further information regarding the Statutory Authority to Preserve Rail Service, contact Chris Oehrle, Surface Transportation Board, 395 E Street SW., Washington, DC 20423–0001, or email *PRA@stb.dot.gov.* [Federal Information Relay Service (FIRS) for the hearing impaired: (800) 877–8339.]

SUPPLEMENTARY INFORMATION: Respondents seeking authority from the Board to preserve rail lines must submit certain information required under the Board's related regulations and, in some circumstances, railroads seeking to abandon a line must disclose certain information to the offeror or applicant.

Offer of Financial Assistance. When a rail line would otherwise be approved for abandonment (or discontinuance), any financially responsible person may seek to acquire the line for continued rail service (after abandonment has been approved), or may seek to temporarily subsidize continued operations by the incumbent railroad (after abandonment or discontinuance has been approved), by filing an OFA under 49 U.S.C. 10904 and 49 CFR 1152.27. An OFA may be submitted to the Board as soon as the railroad seeks abandonment (or discontinuance) authority. Once an OFA is submitted, the abandoning railroad must, upon request, promptly provide to any party considering an OFA and to the Board an estimate of the annual subsidy or minimum purchase price; a report on the physical condition of the line; and data on traffic, revenues, net liquidation value, and the cost to rehabilitate to class I (minimum) track standards. If the parties are not able to agree upon the purchase price or subsidy, then, to move forward, either party may ask the Board to set the price or subsidy, which will be binding upon the parties if the offeror chooses to accept the terms set by the Board and proceed with the purchase.

Public Use Request. Any person may request that the Board prohibit an abandoning railroad from disposing of the right-of-way—for up to 180 days—without first offering the right-of-way (on reasonable terms) for other suitable public purposes (such as mass transit, pipeline, transmission lines, recreation, etc.). Such requests are governed by 49 U.S.C. 10905 and 49 CFR 1152.28.

Feeder Line Application. When a line has been identified on a railroad's system diagram map as a potential candidate for abandonment (or discontinuance), but before abandonment (or discontinuance) authority has been sought, any financially responsible person (other than a Class I or II railroad) may, by filing a feeder line application under 49 U.S.C. 10907 and 49 CFR 1151, seek to acquire the line for continued rail service under the forced sale provisions of the feeder railroad development program.

Trail-Use Request. The Trails Act provides a mechanism whereby any interested person may seek to ''rail bank'' a rail right-of-way that has been approved for abandonment and use the property in the interim as a recreational trail. The Board has a ministerial role in this process; under 49 CFR 1152.29, interested persons may submit a request to the Board for a trail-use condition, and if the statutory conditions are met, the Board must authorize the parties to negotiate a trail-use agreement by issuing a CITU, or, in an exemption proceeding, a NITU. The CITU or NITU typically permit negotiations for 180 days, but the negotiations can be extended upon request to the Board. Under the Trails Act, trail-use agreements are consensual, not forced. The abandoning railroad is free to choose whether or not to enter into or continue negotiations to transfer (all or part of) the right-of-way to a trail sponsor.

Under the PRA, a federal agency conducting or sponsoring a collection of information must display a currently valid OMB control number. A collection of information, which is defined in 44 U.S.C. 3502(3) and 5 CFR 1320.3(c), includes agency requirements or requests that persons submit reports, keep records, or provide information to the agency, third parties, or the public. Section 3507(b) of the PRA requires, concurrent with an agency's submitting a collection to OMB for approval, a 30-day notice and comment period through publication in the **Federal Register** concerning each proposed collection of information, including each proposed extension of an existing collection of information.

Dated: September 2, 2015.

Jeffrey Herzig,

Clearance Clerk.

[FR Doc. 2015–22522 Filed 9–4–15; 8:45 am]

BILLING CODE 4915–01–P

DEPARTMENT OF THE TREASURY

Internal Revenue Service

Open Meeting of the Taxpayer Advocacy Panel Joint Committee

AGENCY: Internal Revenue Service (IRS), Treasury.

ACTION: Notice of meeting.

SUMMARY: An open meeting of the Taxpayer Advocacy Panel Joint Committee will be conducted. The Taxpayer Advocacy Panel is soliciting public comments, ideas, and suggestions on improving customer service at the Internal Revenue Service.

DATES: The meeting will be held Wednesday, October 28, 2015.

FOR FURTHER INFORMATION CONTACT: Lisa Billups at 1–888–912–1227 or (214) 413–6523.

SUPPLEMENTARY INFORMATION: Notice is hereby given pursuant to section 10(a)(2) of the Federal Advisory Committee Act, 5 U.S.C. App. (1988) that an open meeting of the Taxpayer Advocacy Panel Joint Committee will be held Wednesday, October 28, 2015, at 1:00 p.m. Eastern Time via teleconference. The public is invited to make oral comments or submit written statements for consideration. For more information please contact Lisa Billups at 1–888–912–1227 or 214–413–6523, or write TAP Office 1114 Commerce Street, Dallas, TX 75242–1021, or post comments to the Web site: *http://www.improveirs.org.*

The agenda will include various committee issues for submission to the IRS and other TAP related topics. Public input is welcomed.

Dated: September 1, 2015.

Sheila Andrews,

Director, Taxpayer Advocacy Panel.

[FR Doc. 2015–22580 Filed 9–4–15; 8:45 am]

BILLING CODE 4830–01–P

DEPARTMENT OF THE TREASURY

Internal Revenue Service

Proposed Collection; Comment Request for Form 5472.

AGENCY: Internal Revenue Service (IRS), Treasury.

ACTION: Notice and request for comments.

SUMMARY: The Department of the Treasury, as part of its continuing effort to reduce paperwork and respondent burden, invites the general public and other Federal agencies to take this opportunity to comment on proposed and/or continuing information collections, as required by the Paperwork Reduction Act of 1995, Public Law 104–13 (44 U.S.C. 3506(c)(2)(A)). Currently, the IRS is soliciting comments concerning Form 5472, Information Return of a 25% Foreign-Owned U.S. Corporation or a Foreign Corporation Engaged in a U.S. Trade or Business.

DATES: Written comments should be received on or before October 8, 2015 to be assured of consideration.

ADDRESSES: Direct all written comments to Martha Brinson, Internal Revenue Service, Room 6129, 1111 Constitution Avenue NW., Washington, DC 20224.

FOR FURTHER INFORMATION CONTACT: Requests for additional information or copies of the form and instructions should be directed to Kerry Dennis, Internal Revenue Service, Room 6129, 1111 Constitution Avenue NW., Washington, DC 20224 or through the internet at *Kerry.Dennis@irs.gov.*

SUPPLEMENTARY INFORMATION:

Title: Information Return of a 25% Foreign-Owned U.S. Corporation or a Foreign Corporation Engaged in a U.S. Trade or Business.

OMB Number: 1545–0805.

Form Number: 5472.

Abstract: Form 5472 is used to report information about transactions between a U.S. corporation that is 25% foreign owned or a foreign corporation that is engaged in a U.S. trade or business and related foreign parties. The IRS uses Form 5472 to determine if inventory or other costs deducted by the U.S. or foreign corporation are correct.

Current Actions: There are no changes being made to the form at this time.

Type of Review: Extension of a currently approved collection.

Affected Public: Business or other for-profit organizations.

Estimated Number of Responses: 103,784.

Estimated Time per Response: 24 hrs. 31 min.

Estimated Total Annual Burden Hours: 2,544,784.

The following paragraph applies to all of the collections of information covered by this notice:

An agency may not conduct or sponsor, and a person is not required to respond to, a collection of information unless the collection of information displays a valid OMB control number. Books or records relating to a collection of information must be retained as long as their contents may become material in the administration of any internal revenue law. Generally, tax returns and tax return information are confidential, as required by 26 U.S.C. 6103.

Request For Comments: Comments submitted in response to this notice will be summarized and/or included in the request for OMB approval. All comments will become a matter of public record. Comments are invited on: (a) Whether the collection of information is necessary for the proper performance of the functions of the agency, including whether the information shall have practical utility; (b) the accuracy of the agency's estimate of the burden of the collection of information; (c) ways to enhance the quality, utility, and clarity of the information to be collected; (d) ways to minimize the burden of the collection of information on respondents, including through the use of automated collection techniques or other forms of information technology; and (e) estimates of capital or start-up costs and costs of operation, maintenance, and purchase of services to provide information.

Approved: August 19, 2015.

Martha Brinson,

IRS Tax Analyst.

[FR Doc. 2015–22584 Filed 9–4–15; 8:45 am]

BILLING CODE 4830–01–P

DEPARTMENT OF THE TREASURY

Internal Revenue Service

Open Meeting of the Taxpayer Advocacy Panel Tax Forms and Publications Project Committee

AGENCY: Internal Revenue Service (IRS), Treasury.

ACTION: Notice of meeting.

SUMMARY: An open meeting of the Taxpayer Advocacy Panel Tax Forms and Publications Project Committee will be conducted. The Taxpayer Advocacy Panel is soliciting public comments, ideas and suggestions on improving customer service at the Internal Revenue Service.

DATES: The meeting will be held October 6, 2015.

FOR FURTHER INFORMATION CONTACT: Donna Powers at 1–888–912–1227 or (954) 423–7977.

SUPPLEMENTARY INFORMATION: Notice is hereby given pursuant to section 10(a)(2) of the Federal Advisory Committee Act, 5 U.S.C. App. (1988) that an open meeting of the Taxpayer Advocacy Panel Tax Forms and Publications Project Committee will be held Tuesday October 6, 2015 at 1:00 p.m.. Eastern Time via teleconference. The public is invited to make oral comments or submit written statements for consideration. Due to limited conference lines, notification of intent to participate must be made with Donna Powers. For more information please contact: Donna Powers at 1–888–912–1227 or (954) 423–7977 or write: TAP Office, 1000 S. Pine Island Road, Plantation, FL 33324 or contact us at the Web site: *http://www.improveirs.org.* The committee will be discussing various issues related to Tax Forms and Publications and public input is welcomed.

Dated: September 1, 2015.

Sheila Andrews,

Director, Taxpayer Advocacy Panel.

[FR Doc. 2015–22585 Filed 9–4–15; 8:45 am]

BILLING CODE 4830–01–P

DEPARTMENT OF THE TREASURY

Internal Revenue Service

Open meeting of the Taxpayer Advocacy Panel Toll-Free Phone Line Project Committee

AGENCY: Internal Revenue Service (IRS), Treasury.

ACTION: Notice of meeting.

SUMMARY: An open meeting of the Taxpayer Advocacy Panel Toll-Free Phone Line Project Committee will be conducted. The Taxpayer Advocacy Panel is soliciting public comments, ideas, and suggestions on improving customer service at the Internal Revenue Service.

DATES: The meeting will be held Wednesday, October 21, 2015.

FOR FURTHER INFORMATION CONTACT: Linda Rivera at 1–888–912–1227 or (202) 317–3337.

SUPPLEMENTARY INFORMATION: Notice is hereby given pursuant to section 10(a)(2) of the Federal Advisory Committee Act, 5 U.S.C. App. (1988) that an open meeting of the Taxpayer Advocacy Panel Toll-Free Phone Line Project Committee will be held

Wednesday, October 21, 2015 at 2:30 p.m. Eastern Time via teleconference. The public is invited to make oral comments or submit written statements for consideration. Due to limited conference lines, notification of intent to participate must be made with Linda Rivera. For more information please contact: Ms. Rivera at 1–888–912–1227 or (202) 317–3337, or write TAP Office, 1111 Constitution Avenue NW., Room 1509, National Office, Washington, DC 20224, or contact us at the Web site: *http://www.improveirs.org.*

The committee will be discussing Toll-free issues and public input is welcomed.

Dated: September 1, 2015.

Sheila Andrews,

Director, Taxpayer Advocacy Panel.

[FR Doc. 2015–22583 Filed 9–4–15; 8:45 am]

BILLING CODE 4830–01–P

DEPARTMENT OF THE TREASURY

Internal Revenue Service

Members of Senior Executive Service Performance Review Boards

AGENCY: Internal Revenue Service (IRS), Department of the Treasury (Treasury).

ACTION: Notice.

SUMMARY: The purpose of this notice is to publish the names of those IRS employees who will serve as members on IRS's Fiscal Year 2015 Senior Executive Service (SES) Performance Review Boards.

DATES: This notice is effective September 1, 2015.

FOR FURTHER INFORMATION CONTACT: Cheryl Huffman, IRS, 250 Murall Drive, Kearneysville, WV 25430, (304) 264–5572.

SUPPLEMENTARY INFORMATION: Pursuant to 5 U.S.C. 4314(c)(4), this notice announces the appointment of members to the IRS's SES Performance Review Boards. The names and titles of the executives serving on the boards are as follows:

John M. Dalrymple, Deputy Commissioner for Services and Enforcement (DCSE)
Jeffrey J. Tribiano, Deputy Commissioner for Operations Support (DCOS)
David P. Alito, Deputy Division Commissioner, Wage & Investment (W&I)
Brenda S. Alwin, Director Operations, Information Technology (IT)
Sergio E. Arellano, Director, International Business Compliance, Large Business &International (LB&I)
Thomas A. Brandt, Chief Risk Officer and Senior Advisor to the Commissioner, Office of the Commissioner (COMM)
Carol A. Campbell, Director, Return Preparer Office, Deputy Commissioner for Services and Enforcement (DCSE)
Robin L. Canady, Chief Financial Officer (CFO)
Daniel B. Chaddock, Associate Chief Information Officer (CIO), Enterprise Services, Information Technology (IT)
Robert S. Choi, Director, Employee Plans, Tax Exempt & Government Entities (TEGE)
Cheryl P. Claybough, Industry Director, Communications, Technology and Media, Large Business & International (LB&I)
James P. Clifford, Director, Accounts Management, Wage & Investment (W&I)
Kenneth C. Corbin, Director, Return Integrity and Compliance Services, Wage & Investment (W&I)
Nanette M. Downing, Assistant Deputy Commissioner, Government Entities/Shared Services, Tax Exempt & Government Entities (TEGE)
Alain Dubois, Deputy Director, Research, Analysis & Statistics, Office of the Commissioner (COMM)
Nicole M. Elliott, Senior Director for Operations, Affordable Care Act, Office of the Commissioner (COMM)
John D. Fort, Deputy Chief, Criminal Investigations (CI)
Shelley M. Foster, Director, Examination Field, Small Business/Self-Employed (SB/SE)
Karen L. Freeman, Associate CIO, Enterprise Operations, Information Technology (IT)
Julieta Garcia, Director, Customer Assistance, Relationships and Education, Wage & Investment (W&I)
Silvana G. Garza, Deputy CIO for Operations, Information Technology (IT)
Linda K. Gilpin, Director, Submission Processing, Information Technology (IT)
Rena C. Girinakis, Deputy National Taxpayer Advocate, Taxpayer Advocate Service (TAS)
Dietra D. Grant, Director, Stakeholder Partnership, Education and Communication, Wage & Investment (W&I)
Susan B. Greer, Acting Executive Director, Office of Equity, Diversity and Inclusion, Office of the Commissioner (COMM)
Darren J. Guillot, Director, Collection—Field, Small Business/Self-Employed (SB/SE)
Daniel S. Hamilton, Director Enterprise Systems Testing, Information Technology (IT)
Donna C. Hansberry, Deputy Division Commissioner, Tax Exempt & Government Entities (TEGE)
Nancy E. Hauth, Director, Examination Headquarters, Small Business/Self-Employed (SB/SE)
Mary R. Hernandez, Deputy Associate CIO, Enterprise Operations, Information Technology (IT)
Shenita L. Hicks, Director, Examination, Small Business/Self-Employed (SB/SE)
Debra S. Holland, Commissioner, Wage & Investment (W&I)
David W. Horton, Acting Deputy Commissioner (International), Large Business & International (LB&I)
Mary J. Howard, Director, Privacy, Governmental Liaison and Disclosure (PGLD)
Cecil T. Hua, Director, Enterprise Technology Implementation, Information Technology (IT)
Robert L. Hunt, Director, Operations Support, Small Business/Self-Employed (SB/SE)
Sharon C. James, Associate CIO, Cybersecurity, Information Technology (IT)
Robin DelRey Jenkins, Director, Collection—Campus, Small Business/Self-Employed (SB/SE)
Gregory E. Kane, Deputy Chief Financial Officer, Chief Financial Officer (CFO)
Thomas J. Kelly, Director of Field Operations—Northern Area, Criminal Investigation (CI)
Donna J. Kramer, Director, Field Assistance, Wage & Investment (W&I)
Susan L. Latham, Director, Shared Support, Large Business & International (LB&I)
Robert M. Leahy Jr., Associate CIO, Strategy and Planning, Information Technology (IT)
Ronald J. Leidner Jr., Director, Compliance, Information Technology (IT)
Terry Lemons, Chief, Communications & Liaison (C&L)
Sunita B. Lough, Commissioner, Tax Exempt & Government Entities (TEGE)
Deborah Lucas-Trumbull, Director, Demand Management and Project Governance, Information Technology (IT)
William H. Maglin II, Associate CFO for Financial Management, Chief Financial Officer (CFO)
Paul J. Mamo, Director, Submission Processing, Wage & Investment (W&I)
Lee D. Martin, Director, Deputy Director, Office of Professional Responsibility, Deputy Commissioner for Services and Enforcement (DCSE)
Thomas D. Mathews, Director, Collection Headquarters, Small Business/Self-Employed (SB/SE)

Rajive K. Mathur, Director, Online Services, Deputy Commissioner for Services and Enforcement (DCSE)
Ivy S. McChesney, Director, Customer Accounts Services, Wage & Investment (W&I)
Kevin Q. McIver, Director, Facilities Management and Security Awareness, Agency-Wide Shared Services (AWSS)
Tina D. Meaux, Director, Pre-Filing and Technical Guidance, Large Business & International (LB&I)
Terence V. Milholland, Chief Technology Officer/Chief Information Officer, Information Technology (IT)
Mary Beth Murphy, Deputy Commissioner, Small Business/Self-Employed (SB/SE)
Douglas W. O'Donnell, Commissioner, Large Business & International (LB&I)
Verlinda F. Paul, Director, Office of Program Coordination and Integration, Wage & Investment (W&I)
Kimberly A. Petty, Associate CIO, Applications Development, Information Technology (IT)
Crystal K. Philcox, Chief of Staff, Office of the Commissioner (COMM)
Scott B. Prentky, Director Collection, Small Business/Self-Employed (SB/SE)
Robert A. Ragano, Director, Corporate Data, Information Technology (IT)
Daniel T. Riordan, IRS Human Capital Officer, Human Capital Office (HCO)
Tamera L. Ripperda, Director, Exempt Organizations, Tax Exempt & Government Entities (TEGE)
Kathy J. Robbins, Industry Director, Natural Resources and Construction, Large Business & International (LB&I)
Karen M. Schiller, Commissioner, Small Business/Self-Employed (SB/SE)
Rene S. Schwartzman, Business Modernization Executive, Wage & Investment (W&I)
Rosemary Sereti, Industry Director, Financial Services, Large Business & International (LB&I)
Verline A. Shepherd, Associate CIO for User and Network Services, Information Technology (IT)
Nancy A. Sieger, Deputy Associate CIO, Applications Development, Information Technology (IT)
Sudhanshu K. Sinha, Director, Enterprise Architecture, Information Technology (IT)
Marla L. Somerville, Associate CIO, Enterprise Information Technology Program Management Office, Information Technology (IT)
Carolyn A. Tavenner, Director, Affordable Care Act, Affordable Care Act Office (ACA)
Kathryn D. Vaughan, Director, Examination—Campus, Small Business/Self-Employed (SB/SE)
Peter C. Wade, Director, Technology Solutions, Small Business/Self-Employed (SB/SE)
Kathleen E. Walters, Deputy IRS Human Capital Officer, Human Capital Office (HCO)
Richard Weber, Chief, Criminal Investigation (CI)
Stephen A. Whitlock, Director, Whistleblower Office, Deputy Commissioner for Services and Enforcement (DCSE)
Kirsten B. Wielobob, Chief, Appeals (AP)
Joseph L. Wilson, Project Director ACA Project Office (ACA), Small Business/Self-Employed (SB/SE)
Johnny E. Witt, Deputy Director, Affordable Care Act Office (ACA)

This document does not meet the Treasury's criteria for significant regulations.

John M. Dalrymple,

Deputy Commissioner for Services and Enforcement, Internal Revenue Service.

[FR Doc. 2015–22577 Filed 9–4–15; 8:45 am]

BILLING CODE 4830–01–P

DEPARTMENT OF THE TREASURY

Internal Revenue Service

Open meeting of the Taxpayer Advocacy Panel Notices and Correspondence Project Committee

AGENCY: Internal Revenue Service (IRS), Treasury.

ACTION: Notice of meeting.

SUMMARY: An open meeting of the Taxpayer Advocacy Panel Notices and Correspondence Project Committee will be conducted. The Taxpayer Advocacy Panel is soliciting public comments, ideas, and suggestions on improving customer service at the Internal Revenue Service.

DATES: The meeting will be held Thursday, October 8, 2015.

FOR FURTHER INFORMATION CONTACT: Theresa Singleton at 1–888–912–1227 or 202–317–3329.

SUPPLEMENTARY INFORMATION: Notice is hereby given pursuant to section 10(a)(2) of the Federal Advisory Committee Act, 5 U.S.C. App. (1988) that a meeting of the Taxpayer Advocacy Panel Notices and Correspondence Project Committee will be held Thursday, October 8, 2015, at 12:00 p.m. Eastern Time via teleconference. The public is invited to make oral comments or submit written statements for consideration. Due to limited conference lines, notification of intent to participate must be made with Theresa Singleton. For more information please contact: Theresa Singleton at 1–888–912–1227 or 202–317–3329, TAP Office, 1111 Constitution Avenue NW., Room 1509, National Office, Washington, DC 20224, or contact us at the Web site: *http://www.improveirs.org.*

The agenda will include a discussion on various letters, and other issues related to written communications from the IRS.

Dated: September 1, 2015.

Sheila Andrews,

Director, Taxpayer Advocacy Panel.

[FR Doc. 2015–22591 Filed 9–4–15; 8:45 am]

BILLING CODE 4830–01–P

DEPARTMENT OF THE TREASURY

Internal Revenue Service

Open Meeting of the Taxpayer Advocacy Panel Special Projects Committee

AGENCY: Internal Revenue Service (IRS) Treasury

ACTION: Notice of Meeting.

SUMMARY: An open meeting of the Taxpayer Advocacy Panel Special Projects Committee will be conducted. The Taxpayer Advocacy Panel is soliciting public comments, ideas, and suggestions on improving customer service at the Internal Revenue Service.

DATES: The meeting will be held Thursday, October 1, 2015.

FOR FURTHER INFORMATION CONTACT: Kim Vinci at 1–888–912–1227 or 916–974–5086.

SUPPLEMENTARY INFORMATION: Notice is hereby given pursuant to Section 10(a)(2) of the Federal Advisory Committee Act, 5 U.S.C. App. (1988) that a meeting of the Taxpayer Advocacy Panel Special Projects Committee will be held Thursday, October 1, 2015, at 2:00 p.m. Eastern Time via teleconference. The public is invited to make oral comments or submit written statements for consideration. Due to limited conference lines, notification of intent to participate must be made with Kim Vinci. For more information please contact: Kim Vinci at 1–888–912–1227 or 916–974–5086, TAP Office, 4330 Watt Ave, Sacramento, CA 95821, or contact us at the Web site: *http://www.improveirs.org.*

The agenda will include a discussion on various special topics with IRS processes.

Dated: September 1, 2015.

Sheila Andrews,

Director, Taxpayer Advocacy Panel.

[FR Doc. 2015–22578 Filed 9–4–15; 8:45 am]

BILLING CODE 4830–01–P

DEPARTMENT OF THE TREASURY

Internal Revenue Service

Open meeting of the Taxpayer Advocacy Panel Taxpayer Communications Project Committee

AGENCY: Internal Revenue Service (IRS), Treasury.

ACTION: Notice of meeting.

SUMMARY: An open meeting of the Taxpayer Advocacy Panel Taxpayer Communications Project Committee will be conducted. The Taxpayer Advocacy Panel is soliciting public comments, ideas, and suggestions on improving customer service at the Internal Revenue Service.

DATES: The meeting will be held Thursday, October 1, 2015.

FOR FURTHER INFORMATION CONTACT: Antoinette Ross at 1–888–912–1227 or (202) 317–4110.

SUPPLEMENTARY INFORMATION: Notice is hereby given pursuant to section 10(a)(2) of the Federal Advisory Committee Act, 5 U.S.C. App. (1988) that an open meeting of the Taxpayer Advocacy Panel Taxpayer Communications Project Committee will be held Thursday, October 1, 2015, at 3:00 p.m. Eastern Time via teleconference. The public is invited to make oral comments or submit written statements for consideration. Due to limited conference lines, notification of intent to participate must be made with Antoinette Ross. For more information please contact: Antoinette Ross at 1–888–912–1227 or (202) 317–4110, or write TAP Office, 1111 Constitution Avenue NW., Room 1509, National Office, Washington, DC 20224, or contact us at the Web site: *http://www.improveirs.org.*

The committee will be discussing various issues related to Taxpayer Communications and public input is welcome.

Dated: September 1, 2015.

Sheila Andrews,

Director, Taxpayer Advocacy Panel.

[FR Doc. 2015–22590 Filed 9–4–15; 8:45 am]

BILLING CODE 4830–01–P

DEPARTMENT OF THE TREASURY

Internal Revenue Service

Proposed Information Collection; Comment Request

AGENCY: Internal Revenue Service (IRS), Treasury.

ACTION: Notice and request for comments.

SUMMARY: The Department of the Treasury, as part of its continuing effort to reduce paperwork and respondent burden, invites the general public and other Federal agencies to take this opportunity to comment on proposed and/or continuing information collections, as required by the Paperwork Reduction Act of 1995, Public Law 104–13 (44 U.S.C. 3506(c)(2)(A)).

DATES: Written comments should be received on or before November 9, 2015 to be assured of consideration.

ADDRESSES: Direct all written comments to Christie A. Preston, Internal Revenue Service, Room 6129, 1111 Constitution Avenue NW., Washington, DC 20224.

Please send separate comments for each specific information collection listed below. You must reference the information collection's title, form number, reporting or record-keeping requirement number, and OMB number (if any) in your comment.

FOR FURTHER INFORMATION CONTACT: To obtain additional information, or copies of the information collection and instructions, or copies of any comments received, contact Elaine Christophe, at Internal Revenue Service, Room 6129, 1111 Constitution Avenue NW., Washington, DC 20224, or through the internet, at *Elaine.H.Christophe@irs.gov.*

SUPPLEMENTARY INFORMATION:

Request for Comments

The Department of the Treasury and the Internal Revenue Service, as part of their continuing effort to reduce paperwork and respondent burden, invite the general public and other Federal agencies to take this opportunity to comment on the proposed or continuing information collections listed below in this notice, as required by the Paperwork Reduction Act of 1995, (44 U.S.C. 3501 *et seq.*).

Request for Comments: Comments submitted in response to this notice will be summarized and/or included in our request for Office of Management and Budget (OMB) approval of the relevant information collection. All comments will become a matter of public record. Please do not include any confidential or inappropriate material in your comments.

We invite comments on: (a) Whether the collection of information is necessary for the proper performance of the agency's functions, including whether the information has practical utility; (b) the accuracy of the agency's estimate of the burden of the collection of information; (c) ways to enhance the quality, utility, and clarity of the information to be collected; (d) ways to minimize the burden of the collection of information on respondents, including the use of automated collection techniques or other forms of information technology; and (e) estimates of capital or start-up costs and costs of operation, maintenance, and purchase of services to provide the requested information. Currently, the IRS is seeking comments concerning the following forms, and reporting and record-keeping requirements:

Title: Permitted Elimination of Preretirement Optional Forms of Benefit.

OMB Number: 1545–1545.

Regulation Project Number: REG–107644–97.

Abstract: This regulation permits an amendment of a qualified plan or other employee pension benefit plan that eliminates plan provisions for benefit distributions before retirement age but after age 70½. The regulation affects employers that maintain qualified plans and other employee pension benefit plans, plan administrators of these plans and participants in these plans.

Current Actions: There is no change to this existing regulation.

Type of Review: Extension of a currently approved collection.

Affected Public: Business or other for-profit organizations and not-for-profit institutions.

Estimated Number of Respondents: 135,000.

Estimated Average Time per Respondent: 22 min.

Estimated Total Annual Burden Hours: 48,800.

Title: Travel Expenses of State Legislators.

OMB Number: 1545–2115.

Form Number: T.D. 9481

Abstract: This document contains final regulations relating to travel expenses of state legislators while away from home. The regulations affect eligible state legislators who make the election under section 162(h) of the Internal Revenue Code (Code). The regulations clarify the amount of travel expenses that a state legislator may deduct under section 162(h).

Current Actions: There is no change in the paperwork burden previously approved by OMB.

Type of Review: Extension of a currently approved collection.

Affected Public: Individuals and Households.

Estimated Number of Respondents: 7400.

Estimated Time Per Respondent: .50 hours.

Estimated Total Annual Burden Hours: 3700.

Title: EE–63–88 (Final and temporary regulations) Taxation of Fringe Benefits and Exclusions From Gross Income for Certain Fringe Benefits; *IA–140–86* (Temporary) Fringe Benefits; Listed Property; and *REG–209785–95* (Final) Substantiation of Business Expenses.

OMB Number: 1545–0771.

Regulation Project Number: EE–63–88; IA–140–86; and REG–209785–95.

Abstract: EE–63–88—This regulation provides guidance on the tax treatment of taxable and nontaxable fringe benefits and general and specific rules for the valuation of taxable fringe benefits in accordance with Code sections 61 and 132. The regulation also provides guidance on exclusions from gross income for certain fringe benefits. *IA–140–86*—This regulation provides guidance relating to the requirement that any deduction or credit with respect to business travel, entertainment, and gift expenses be substantiated with adequate records in accordance with Code section 274(d). The regulation also provides guidance on the taxation of fringe benefits and clarifies the types of records that are generally necessary to substantiate any deduction or credit for listed property. *REG–209785–95*—This regulation provides that taxpayers who deduct, or reimburse employees for, business expenses for travel, entertainment, gifts, or listed property are required to maintain certain records, including receipts, for expenses of $75 or more.

Current Actions: There are no changes to these existing regulations.

Type of Review: Extension of a currently approved collection.

Affected Public: Individuals or households, business or other for-profit organizations, not-for profits institutions, farms and Federal, state, local or tribal governments.

Estimated Number of Respondents: 28,582,150.

Estimated Time per Respondent: 1 hr., 20 min.

Estimated Total Annual Burden Hours: 37,922,688.

Title: Qualifying Advanced Coal Project Program.

OMB Number: 1545–2003.

Form Number: Notice 2006–24.

Abstract: This notice establishes the qualifying advanced coal project program under § 48A of the Internal Revenue Code. The notice provides the time and manner for a taxpayer to apply for an allocation of qualifying advanced coal project credits and, once the taxpayer has received this allocation, the time and manner for the taxpayer to file for a certification of its qualifying advanced coal project.

Current Actions: There are no changes to the total burden being made at this point in time.

Type of Review: Extension of a currently approved collection.

Affected Public: Businesses and other for-profit organizations.

Estimated Number of Respondents: 45.

Estimated Time Per Respondent: 110 hours.

Estimated Total Annual Burden Hours: 4,950.

The following paragraph applies to all of the collections of information covered by this notice:

An agency may not conduct or sponsor, and a person is not required to respond to, a collection of information unless the collection of information displays a valid OMB control number. Books or records relating to a collection of information must be retained as long as their contents may become material in the administration of any internal revenue law. Generally, tax returns and tax return information are confidential, as required by 26 U.S.C. 6103.

Approved: September 1, 2015.

Elaine Christophe,

IRS Reports Clearance Officer.

[FR Doc. 2015–22588 Filed 9–4–15; 8:45 am]

BILLING CODE 4830–01–P

DEPARTMENT OF THE TREASURY

Internal Revenue Service

Open Meeting of the Taxpayer Advocacy Panel Taxpayer Assistance Center Improvements Project Committee

AGENCY: Internal Revenue Service (IRS), Treasury.

ACTION: Notice of meeting.

SUMMARY: An open meeting of the Taxpayer Advocacy Panel Taxpayer Assistance Center Improvements Project Committee will be conducted. The Taxpayer Advocacy Panel is soliciting public comments, ideas, and suggestions on improving customer service at the Internal Revenue Service.

DATES: The meeting will be held Wednesday, October 14, 2015.

FOR FURTHER INFORMATION CONTACT: Otis Simpson at 1–888–912–1227 or 202–317–3332.

SUPPLEMENTARY INFORMATION: Notice is hereby given pursuant to section 10(a)(2) of the Federal Advisory Committee Act, 5 U.S.C. App. (1988) that a meeting of the Taxpayer Advocacy Panel Taxpayer Assistance Center Improvements Project Committee will be held Wednesday, October 14, 2015, at 3:00 p.m. Eastern Time. The public is invited to make oral comments or submit written statements for consideration. Due to limited conference lines, notification of intent to participate must be made with Otis Simpson. For more information please contact: Otis Simpson at 1–888–912–1227 or 202–317–3332, TAP Office, 1111 Constitution Avenue NW., Room 1509–National Office, Washington, DC 20224, or contact us at the Web site: *http://www.improveirs.org.*

The committee will be discussing various issues related to the Taxpayer Assistance Centers and public input is welcomed.

Dated: September 1, 2015.

Sheila Andrews,

Director, Taxpayer Advocacy Panel.

[FR Doc. 2015–22582 Filed 9–4–15; 8:45 am]

BILLING CODE 4830–01–P

DEPARTMENT OF VETERANS AFFAIRS

Fund Availability Under the Grants for Transportation of Veterans in Highly Rural Areas

AGENCY: Department of Veterans Affairs.

ACTION: Notice of funding availability (grant renewals).

SUMMARY: The Department of Veterans Affairs (VA) is announcing the availability of funds under the Grants for Transportation of Veterans in Highly Rural Areas. This Notice contains information concerning the Grants for Transportation of Veterans in Highly Rural Areas program, grant renewal application process, and amount of funding available.

FOR FURTHER INFORMATION CONTACT: Darren Wallace, National Coordinator, Highly Rural Transportation Grants, Veterans Transportation Program, Chief Business Office (10NB2G), 2957 Clairmont Road, Atlanta, GA 30329; (404) 828–5380 (this is not a toll-free number); and Sylvester Wallace at *sylvester.wallace2@va.gov.*

Announcement Type: Notice of Funding Availability (Grant Renewals).

Funding Opportunity Number: VA–HRTG–2015.

Catalog of Federal Domestic Assistance (CFDA) Number: 64.035.

Dates and Addresses: Applications for assistance under the Grants for Transportation of Veterans in Highly Rural Areas Program must be submitted to *www.grants.gov* by 4:00 p.m. eastern standard time on October 8, 2015. In the interest of fairness to all competing applicants and with the single exception described farther below regarding unforeseen technical problems beyond the control of the applicant with the Grants.gov Web site, this deadline is firm as to date and hour, and VA will treat as ineligible for consideration any application that is received after the deadline. Applicants should take this practice into account and make early submission of their materials to avoid any risk of loss of eligibility brought about by unanticipated delays, computer service outages (in the case of grants.gov), or other delivery-related problems.

Access to the Application

The application can be found at *www.grants.gov/search/basic.do,* utilizing the ''search by Catalog of Federal Domestic Assistance number'' function, and entering in that search field the number 64.035. Questions should be referred to the Veterans Transportation Program Office at (404) 828–5380 (this is not a toll-free number) or by email at *HRTG@va.gov.* For further information on Grants for Transportation of Veterans in Highly Rural Areas Program requirements, see the Final Rule published in the **Federal Register** (78 FR 19586) on April 2, 2013, which is codified in 38 CFR 17.700 through 17.730.

Submission of Application Package

Applications may not be sent by facsimile. Applications must be submitted to *www.grants.gov* by the application deadline. Applications must be submitted as a complete package. Materials arriving separately will not be included in the application package for consideration and may result in the application being rejected. All applicable forms cited in the application description must be included.

SUPPLEMENTARY INFORMATION:

Funding Opportunity Description

Overview

Access to VA care for Veterans that are in highly rural areas continues to be an issue across the United States. The VA has established this program to help address barriers to access to care. This program funds innovative approaches to transporting veterans in highly rural areas who typically have longer commute times to Department of Veterans Affairs Medical Centers (VA Medical Centers).

Purpose

VA Veterans Transportation Program (VTP) is pleased to announce that it is seeking grant renewal applications for Grants for Transportation of Veterans in Highly Rural Areas. This program furthers the Department's mission by offering renewal grants to current grantees to enable them to continue to assist veterans in highly rural areas through innovative transportation services to travel to VA Medical Centers and to otherwise assist in providing transportation services in connection with the provision of VA medical care to these veterans.

Authority

Funding applied for under this Notice is authorized by section 307 of the Caregivers and Veterans Omnibus Health Services Act of 2010, Public Law 111–163, section 307 (the 2010 Act), as implemented by regulations codified at 38 CFR 17.700 through 17.730, Grants for Transportation of Veterans in Highly Rural Areas. Funds made available under this Notice are subject to the requirements of the aforementioned regulations and other applicable laws and regulations.

Award Information

In accordance with 38 CFR 17.710, VA is issuing this Notice of Funding Availability (Notice) for renewal grants under the Grants for Transportation of Veterans in Highly Rural Areas Program for fiscal year 2015. Approximately $3 million is authorized to be appropriated for this fiscal year. If additional funding becomes available, VA will issue additional Notices of Funding Availability to permit other grantees to apply for Grants under the Program (in accordance with the terms and conditions of such Notices of Funding Availability). The following requirements apply to grants awarded under this Notice:

- One renewal grant may be awarded to each grantee for fiscal year 2015 for each highly rural area in which the grantee provides transportation services. Transportation services may not be simultaneously provided by more than one grantee in any single highly rural area.
- No single grant will exceed $50,000.
- A veteran who is provided transportation services through a grantee's use of these grant monies will not be charged for such services.
- Renewal grants awarded under this Notice will be for a 1-year period.
- All awards are subject to the availability of appropriated funds and to any modifications or additional requirements that may be imposed by law.

Eligibility Information

Eligible Applicants

Current 2014 grantees are the only eligible entities that are eligible to apply for a renewal grant. Interested eligible entities must submit a complete renewal grant application package to be considered for a grant renewal. Further, a renewal grant will only be awarded if the grantee's program will remain substantially the same as the program for which the original grant was awarded. How the grantee will meet this requirement must be specifically addressed in the renewal grant application.

Cost Sharing or Matching

This solicitation does not require grantees to provide matching funds as a condition of receiving such grants.

Other

Additional grant application requirements are specified in the application package. Submission of an incorrect or incomplete application package will result in the application being rejected during the threshold review, the initial review conducted by VA, to ensure the application package contains all required forms and certifications. Complete packages will then be subject to the evaluation/scoring and selection processes described in § 17.705(c) and (d), respectively. Applicants will be notified of any additional information needed to confirm or clarify information provided in the renewal grant application and the deadline by which to submit such information.

Application and Submission Information

Renewal applications will be submitted through Grants.gov. Grants.gov is a ''one-stop storefront'' that provides a unified process for all customers of federal awards to find funding opportunities and apply for funding. Complete instructions on how to register and submit a renewal grant application can be found at *www.Grants.gov.* If the applicant experiences technical difficulties at any point during this process, please call the

Grants.gov Customer Support Hotline at 800–518–4726, 24 hours a day, 7 days a week, except federal holidays.

Registration in Grants.gov is required prior to submission. VA strongly encourages registering with Grants.gov several weeks before the deadline for application submission. The deadline for applying for funding under this announcement is October 8, 2015.

Search for the funding opportunity on Grants.gov. Please use the following identifying information when searching for the funding opportunity on Grants.gov. The Catalog of Federal Domestic Assistance (CFDA) number for this solicitation is 64.035, titled ''Veterans transportation program,'' and the funding opportunity number is VA–HRTG–2015.

Submit an application consistent with this solicitation by following the directions in Grants.gov. Within 24–48 hours after submitting the electronic application, the applicant should receive an email validation message from Grants.gov. The validation message will state whether the renewal grant application has been received and validated, or rejected, with an explanation. Important: Applicants are urged to submit their applications at least 72 hours prior to the due date of the application to allow time to receive the validation message and to correct any problems that may have caused a rejection notification.

If an applicant experiences unforeseen Grants.gov technical issues beyond the applicant's control that prevent submission of its application by the deadline, the applicant must contact the Veterans Transportation Program Office staff no later than 24 hours after the deadline and request approval to submit its application. At that time, Veterans Transportation Program Office staff will instruct the applicant to submit specific information detailing the technical difficulties. The applicant must email: A description of the technical difficulties, a timeline of submission efforts, the complete grant application, the applicant DUNS number, and Grants.gov Help Desk tracking number(s) received. After the program office reviews all of the information submitted, and contacts the Grants.gov Help Desk to validate the technical issues reported, VA will contact the applicant to either approve or deny the request to submit a late application. If the technical issues reported cannot be validated, the application will be rejected as untimely.

To ensure a fair competition for limited discretionary funds, the following conditions are not valid reasons to permit late submissions: (1) Failure to begin the registration process in sufficient time, (2) failure to follow Grants.gov instructions on how to register and apply as posted on its Web site, (3) failure to follow all of the instructions in the VA solicitation, and (4) technical issues experienced with the applicant's computer or information technology (IT) environment. Notifications regarding known technical problems with Grants.gov, if any, are posted on the Grants.gov Web site.

Content and Form of Application Submission

This section describes what a renewal application must include. Applicants should anticipate that failure to submit an application that contains all of the specified elements will result in the rejection of their application at the threshold review stage. Moreover, applicants should anticipate that if applications are not adequately responsive to the scope of the solicitation, particularly to any critical element, or fail to include a program narrative, budget detail worksheet including a budget narrative, tribal resolution (if applicable), eligibly entity designation, or a list of the highly rural county or counties to be served, they will be rejected and receive no further consideration.

Threshold Review Criteria: (Critical Elements)

- Application deadline: Applications not received by the application deadline through *www.grants.gov* will not be reviewed.
- Eligibility: Applications that do not conform to the eligibility requirements at the beginning section of this document will not be reviewed.
- Budget detail worksheet including a budget narrative. VA strongly recommends use of appropriately descriptive file names (*e.g.,* ''Program Narrative,'' ''Budget Detail Worksheet and Budget Narrative,'' ''Timelines,'' ''Memoranda of Understanding,'' ''Resumes'') for all attachments. VA recommends that resumes be included in a single file.
- Information to complete the Application for Federal Assistance (SF–424). The SF–424 is a standard form required for use as a cover sheet for submission of pre-applications, applications, and related information. Grants.gov takes information from the applicant's profile to populate the fields on this form.
- Program Narrative (Only required if you are making significant changes that do not substantially change the nature of the originally funded program.) The title should read, ''Change of Scope''. Provide a detailed narrative of your program scope and specifically discuss the innovative modes and methods of transportation services to be provided. If the provision of transportation services will necessitate procurement or use of specific equipment, such equipment must be specifically listed.

Note on project evaluations: Applicants that propose to use funds awarded through this solicitation to conduct project evaluations should be aware that certain project evaluations (such as systematic investigations designed to develop or contribute to knowledge) may constitute research. However, project evaluations that are intended only to generate internal improvements to a program or service or are conducted only to meet VA's performance measure data reporting requirements likely do not constitute research. Research, for the purposes of VA-funded programs, is defined as, ''a systematic investigation, including research development, testing, and evaluation, designed to develop or contribute to generalizable knowledge.'' 38 CFR 16.102(d). In addition, research involving human subjects is subject to certain added protections, as set forth in 38 CFR part 16. Applicants should provide sufficient information for VA to determine whether particular project activities they propose would either intentionally or unintentionally collect and/or use information in such a way that it meets VA's regulatory definition of research and thereby invoke the requirements and procedures set forth 38 CFR part 16.

Budget Detail Worksheet and Budget Narrative

Budget Detail Worksheet

A sample SF 424A Budget Detail Worksheet can be found at *www.grants.gov* Web site. Please submit a budget as the example above indicates, and label it if the budget is submitted in a different format, the budget categories listed in the sample budget worksheet must be included.

Budget Narrative: The Budget Narrative should thoroughly and clearly describe *every* category of expense listed in the Budget Detail Worksheet. The narrative should be mathematically sound and correspond with the information and figures provided in the Budget Detail Worksheet. The narrative should explain how *all* costs were estimated and calculated and how they are relevant to the completion of the proposed project. The narrative may include tables for clarification purposes but need not be in a spreadsheet format. As with the Budget Detail Worksheet,

the Budget Narrative must be broken down by year. Note: All non-federal entities have to be in compliance with 2 CFR 200.400–475 Cost Principles and all Office of Management and Budget (OMB) Regulations and Circulars.

Budget Brief (example):

1. Our organization requests _____for the acquisition of_____van(s).
2. The total cost of the van(s)_____ _____. This is the amount requested from VA.
3. Our organization will utilize _____ _____for innovative approaches for transporting veterans. This is the amount requested from VA for a maximum of $50,000.

Indirect Cost Rate Agreement (if applicable)

Indirect costs are allowed only if the applicant has a federally approved indirect cost rate. (This requirement does not apply to units of local government.) A copy of the rate approval must be attached. If the applicant does not have an approved rate, one can be requested by contacting the applicant's cognizant federal agency, which will review all documentation and approve a rate for the applicant organization or, if the applicant's accounting system permits, costs may be allocated in the direct cost categories. If VA is the cognizant federal agency, obtain information needed to submit an indirect cost rate proposal at the contact person listed in this solicitation.

Tribal Authorizing Resolution (if applicable)

If an application identifies a subrecipient that is either (1) a tribe or tribal organization or (2) a third party proposing to provide direct services or assistance to residents on tribal lands, then a current authorizing resolution of the governing body of the tribal entity or other enactment of the tribal council or comparable governing body authorizing the inclusion of the tribe or tribal organization and its membership must be included with the application. In those instances when an organization or consortium of tribes proposes to apply for a grant on behalf of a tribe or multiple specific tribes, then the application must include a resolution from all tribes that will be included as a part of the services/assistance provided under the grant. A consortium of tribes for which existing consortium bylaws allow action without support from all tribes in the consortium (*i.e.,* without authorizing resolution or other enactment of each tribal governing body) may submit a copy of its consortium bylaws with the application in order to satisfy this requirement.

Submission Dates and Times

Renewal grant applications under the Grants for Transportation of Veterans in Highly Rural Areas Program must be submitted to *www.grants.gov* by 4:00 p.m. eastern standard time on October 8, 2015. In the interest of fairness to all competing applicants, this deadline is firm as to date and hour and with the single exception described above regarding unforeseen technical problems beyond the control of the applicant with the Grants.gov Web site, VA will treat as ineligible for consideration any application that is received after the deadline. Applicants should take this into account and make early submission of their materials to avoid any risk of loss of eligibility brought about by unanticipated delays, computer service outages (in the case of grants.gov), or other delivery-related problems.

The application can be found at *www.grants.gov/search/basic.do,* utilizing the ''search by Catalog of Federal Domestic Assistance number'' function, and entering in that search field the number 64.035. Questions should be referred to the Veterans Transportation Program Office at (404) 828–5380 (this is not a toll-free number) or by email at *HRTG@va.gov.* For further information on Grants for Transportation of Veterans in Highly Rural Areas Program requirements, see the governing regulations codified at 38 CFR 17.700 through 17.730.

Renewal grant applications may not be sent by facsimile. These applications must be submitted to *www.grants.gov* by the application deadline; they must also be submitted as a complete package. Materials arriving separately will not be included in the application package for consideration and may result in the application being rejected. All applicable forms cited in the application description must be included.

Intergovernmental Review

Some states require that applicants must contact their State's Single Point of Contact (SPOC) to find out and comply with the State's process, to comply with Executive Order (E.O.) 12372 (1982). Names and addresses of the SPOCs are listed in the Office of Management and Budget's homepage at *www.whitehouse.gov/omb/grants_spoc/.*

Funding Restrictions

Grants will only be awarded to those organizations that are eligible under law as described in the eligibility information section.

Other Submission Requirements

For technical assistance with submitting the application, contact the Grants.gov Customer Support Hotline at 800–518–4726 or via email to *support@grants.gov.*

Note: The Grants.gov Support Hotline hours of operation are 24 hours a day, 7 days a week, except Federal holidays. For assistance with any other requirement of this solicitation, contact Darren Wallace, National Program Coordinator for Grants for Transportation of Veterans in Highly Rural Areas, at (404) 828–5380 (this is not a toll-free number) or by email to *Sylvester.Wallace2@va.gov.*

Additional forms that may be required in connection with an award are available for download on *www.grants.gov.* Examples of these forms can be viewed at the *www.grants.gov* Web site. For successful applicants, receipt of funds will be contingent upon submission of all necessary forms. Please note in particular the following forms: Certifications Regarding Lobbying; Debarment, Suspension and Other Responsibility Matters; Drug-Free Workplace Requirement; Disclosure of Lobbying Activities (Required for any applicant that expends any funds for lobbying activities; this form must be downloaded, completed, and then uploaded); and Standard Assurances (SF 424B) Standard Assurances (required to be submitted to the Veterans Transportation Program Office prior to the receipt of any award funds).

Application Review Information

Criteria

VA is committed to ensuring a fair and open process for awarding these renewal grants. The Veterans Transportation Program Office will review the renewal grant application to make sure that the information presented is reasonable, understandable, measurable, and achievable, as well as consistent with the solicitation. Peer reviewers will conduct a threshold review of all applications submitted under this solicitation to ensure they meet all of the critical elements and all other minimum requirements as identified herein. The Veterans Transportation Program Office may use either internal peer reviewers, external peer reviewers, or a combination to review the applications under this solicitation. An external peer reviewer is an expert in the field of the subject matter of a given solicitation who is NOT a current U.S. Department of Veterans Affairs employee. An internal reviewer is a current U.S. Department of Veterans Affairs employee who is well-

versed or has expertise in the subject matter of this solicitation. Eligible applications will then be evaluated, scored, and rated by a peer review panel. Peer reviewers' ratings and any resulting recommendations are advisory only.

The Chief Business Office Veterans Transportation Program Office conducts a financial review of applications for potential discretionary awards to evaluate the fiscal integrity and financial capability of applicants; examines proposed costs to determine if the Budget Detail Worksheet and Budget Narrative accurately explain project costs; and determines whether costs are reasonable, necessary, and allowable under applicable federal cost principles and agency regulations.

Absent explicit statutory authorization or written delegation of authority to the contrary, the Veterans Health Administration, through the Veterans Transportation Program Office, will forward the reviewers' recommendations for award to the Secretary of Veterans Affairs who will then review and approve each award decision. Such determinations by the Secretary will be final. VA will also give consideration to factors including, but not limited to, underserved populations, geographic diversity, strategic priorities, and available funding when making awards.

Review and Selection Process

Selection of Renewal Grants for Transportation of Veterans in Highly Rural Areas is very competitive. Listed below are the scoring and selection criteria:

1. Renewal Grant Scoring: Renewal applications will be scored using the following selection criteria:

A. VA will award up to 55 points based on the success of the grantee's program, as demonstrated by the following: Application shows that the grantee or identified subrecipient provided transportation services which allowed participants to be provided medical care timely and as scheduled; and application shows that participants were satisfied with the transportation services provided by the grantee or identified subrecipient, as described in the Notice of Fund Availability;

B. VA will award up to 35 points based on the cost effectiveness of the program, as demonstrated by the following: The grantee or identified subrecipient administered the program on budget and grant funds were utilized in a sensible manner, as interpreted by information provided by the grantee to VA under § 17.725(a)(1) through (a)(7); and

C. VA will award up to 15 points based on the extent to which the program complied with the grant agreement and applicable laws and regulations.

2. Renewal Grant Selection: VA will use the following process to award renewal grants:

A. VA will rank those grantees who receive at least the minimum amount of total points and points per category set forth in the Notice of Fund Availability. The grantees will be ranked in order from highest to lowest scores.

B. VA will use the grantee's ranking as the basis for selection for funding. VA will fund the highest-ranked grantees for which funding is available.

Award Administration Information

Award Notices

Successful applicants will receive a Notice of Award (NoA) signed and dated by the Veterans Transportation Program Office that will set forth the amount of the award and other pertinent information. The NoA is the legal document/instrument issued to notify the awardee that an award has been made and that funds may be requested. It will also include standard Terms and Conditions related to participation in the Program.

The NoA will be sent through the U.S. Postal Service to the awardee organization as listed on its SF 424. Note that any communication between the Veterans Transportation Program Office and awardees prior to the issuance of the NoA is *not* authorization to begin performance on the project.

Unsuccessful applicants will be notified of their status by letter, which will likewise be sent through the U.S. Postal Service to the applicant organization as listed on its SF 424.

Renewal Grant Agreements

After an applicant is selected for a renewal grant in accordance with § 17.705(d), VA will draft a renewal grant agreement to be executed by Chief Business Officer in VA and the grantee. Upon execution of the renewal grant agreement, VA will obligate the approved amount. The renewal grant agreement will provide that:

1. The grantee must operate the program in accordance with the provisions of this section and the grant application;

2. If a grantee's renewal application identified a subrecipient, such subrecipient must operate the program in accordance with the provisions of this section and the grant application; and

3. If a grantee's application identified that funds will be used to procure or operate vehicles to directly provide transportation services, the following requirements must be met:

A. Title to the vehicles must vest solely in the grantee or in the identified subrecipient or with leased vehicles in an identified lender.

B. The grantee or identified subrecipeint must, at a minimum, provide motor vehicle liability insurance for the vehicles to the same extent they would insure vehicles procured with their own funds.

C. All vehicle operators must be licensed in a U.S. State or Territory to operate such vehicles.

D. Vehicles must be safe and maintained in accordance with the manufacturer's recommendations; and

E. Vehicles must be operated in accordance with applicable Department of Transportation regulations concerning transit requirements under the Americans with Disabilities Act.

Administrative and National Policy Requirements

Successful applicants selected for awards must agree to comply with additional applicable legal requirements upon acceptance of an award. (VA strongly encourages applicants to review the information pertaining to these additional requirements prior to submitting a renewal application.) As to those additional requirements, we note that while their original grants were subject to additional legal requirements as set forth in 38 CFR parts 43 and 49 those regulatory provisions have since been superseded by the Common Rule governing all Federal Grant Programs. The Common Rule is codified at 2 CFR part 200. Thus, grantees and identified subrecipients awarded renewal grants under the Program must agree as part of their grant agreement to comply with all requirements of the Common Rule, as applicable.

Reporting

Progress Reports

Awardees must agree to cooperate with any VA evaluation of the program and provide required quarterly, annual, and final (at the end of the fiscal year reports in a form prescribed by VTP. A final report consists of a summation of grant activities which include progress toward goals, financial administration of grant funds, grant administration issues and barriers. Reports are to be submitted electronically. These reports must outline how grant funds were used, describe program progress and barriers, and provide measurable outcomes.

Required quarterly and annual reports must include the following information:

- Record of time expended assisting with the provision of transportation services.
- Record of grant funds expended assisting with the provision of transportation services.
- Trips completed.
- Total distance covered.
- Veterans served.
- Locations which received transportation services.
- Results of veteran satisfaction survey

Program Monitoring

The Veterans Transportation Program is responsible for program monitoring. All awardees will be required to cooperate in providing the necessary data elements to the VTP. The goal of program monitoring is to ensure program requirements are met; this will be accomplished by tracking performance and identifying quality and compliance problems through early detection. Methods of program monitoring may include: Monitoring the performance of a grantee's or subrecipient's personnel, procurements, and/or use of grant-funded property; collecting, analyzing data, and assessing program implementation and effectiveness; assessing costs and utilization; and providing technical assistance when needed. Site visit monitoring will include the above-described activities, in addition to the conduct of safety assessments and, if applicable, verification of both current driver's licenses and vehicle insurance coverage.

Federal Financial Report

Awardees are required to submit the *FFR SF 425* on quarterly basis. More details will be announced in the Notice of Award.

Audit Requirements

Awardees must comply with the audit requirements of Office of Management and Budget (OMB) Uniform Guidance 2 CFR part 200, subpart F. Information on the scope, frequency and other aspects of the audits can be found on the Internet at *https://federalregister.gov/a/2013–30465.*

Program Variations

Any changes in a grantee's program activities which result in deviations from the grant renewal agreement must be reported to VA.

Additional Reporting

Additional reporting requirements may be requested by VA to allow VA to fully assess program effectiveness.

Notice of New Post-Award Reporting Requirements

Applicants should anticipate that all recipients (excluding an individual recipient of Federal assistance) of awards of $25,000 or more under this solicitation, consistent with the Federal Funding Accountability and Transparency Act of 2006 (FFATA), Public Law 109–282 (Sept. 26, 2006) will be required to report award information on the subaward reporting system of any first-tier subawards totaling $25,000 or more, and, in certain cases, to report information on the names and total compensation of the five most highly compensated executives of the recipient and first-tier subrecipients. Each applicant entity must ensure that it has the necessary processes and systems in place to comply with the reporting requirements should it receive funding.

It is expected that reports regarding subawards will be made through the FFATA Subaward Reporting System (FSRS) found at *https://www.fsrs.gov.* The FFATA Subaward Reporting System is the reporting tool Federal prime awardees (*i.e.* prime contractors and prime grants recipients) use to capture and report subaward and executive compensation data regarding their first-tier subawards to meet the FFATA reporting requirements. Prime contract awardees will report against sub-contracts awarded and prime grant awardees will report against sub-grants awarded. Prime Contractors awarded a Federal contract or order that is subject to Federal Acquisition Regulation clause 52.204–10 (Reporting Executive Compensation and First-Tier Subcontract Awards) are required to file a FFATA subaward report by the end of the month following the month in which the prime contractor awards any subcontract greater than $25,000.

Please note also that applicants should anticipate that no subaward of an award made under this solicitation may be made to a subrecipient that is subject to the terms of FFATA unless the potential subrecipient acquires and provides a Data Universal Numbering System (DUNS) number.

Other Information

Pursuant to § 17.730(a), VA may recover from the grantee any funds that are not used in accordance with a grant agreement. If VA decides to recover funds, VA will issue to the grantee a notice of intent to recover grant funds, and the grantee will then have 30 days to submit documentation demonstrating why the grant funds should not be recovered. After review of all submitted documentation, VA will determine whether action will be taken to recover the grant funds. When VA determines action will be taken to recover grant funds from the grantee, the grantee is then prohibited under § 17.730(b) from receipt of any further grant funds.

Approved: September 2, 2015.

William F. Russo,

Acting Director, Office of Regulation Policy and Management, Office of General Counsel.

[FR Doc. 2015–22576 Filed 9–4–15; 8:45 am]

BILLING CODE P

DEPARTMENT OF VETERANS AFFAIRS

Solicitation of Nomination for Appointment to the Research Advisory Committee on Gulf War Veterans' Illnesses

ACTION: Notice.

SUMMARY: The Department of Veterans Affairs (VA) is seeking nominees to be considered for membership on the Research Advisory Committee on Gulf War Veterans' Illnesses (Committee). The Committee is authorized by Public Law 105–368, § 104 (the statute), to provide advice to the Secretary of Veterans Affairs (Secretary) on the proposed research studies, plans, and strategies related to understanding and treating the health consequences of military service in the Southwest Asia theatre of operations during the 1990–1991 Gulf War. In accordance with the statute and the Committee's current charter, the majority of the membership shall consist of non-Federal employees, appointed by the Secretary from the general public, serving as Special Government Employees. The Committee provides, not later than December 1 of each year, an annual report summarizing its activities for the preceding year. The Committee reports to the Secretary through the Under Secretary for Health. The Secretary appoints Committee members for a period of 2 to 3 years. A term of service for any member may not exceed 3 years. The Secretary may reappoint members for additional terms.

Self-nominations and nominations of non-Veterans will be accepted. Any letters of nomination from organizations or other individuals should accompany the package when it is submitted.

In accordance with OMB guidance, federally-registered lobbyists may not serve on Federal advisory committees in their individual capacity. Additional information regarding this issue can be found at: *www.federalregister.gov/articles/2014/08/13/2014-19140/revised-guidance-on-appointment-of-*

lobbyists-to-federal-advisory-committees-boards-and-commissions.

SUPPLEMENTARY INFORMATION:

In accordance with the statute, the members of the Committee are appointed by the Secretary from the general public, including but not limited to:

(1) Gulf War Veterans;

(2) Representatives of such Veterans;

(3) Members of the medical and scientific communities representing disciplines, such as, but not limited to, epidemiology, immunology, environmental health, neurology, and toxicology.

The Committee meets at least once and up to three times annually. In accordance with Federal Travel Regulation, VA will cover travel expenses—to include per diem—for all members of the Committee, for any travel associated with official Committee duties. A copy of the Committee's most recent charter and a list of the current membership can be found at *www.va.gov/ADVISORY/* or *www.va.gov/rac-gwvi/*.

The Department makes every effort to ensure that the membership of its advisory committees is fairly balanced, in terms of points of view represented. In the review process, consideration is given to nominees' potential to address the Committee's demographic needs (regional representation, race/ethnicity representation, professional expertise, war era service, gender, former enlisted or officer status, branch of service, etc.). Other considerations to promote a balanced membership include longevity of military service, significant deployment experience, ability to handle complex issues, experience running large organizations, and ability to contribute to the health care and benefits needs of Gulf War Veterans.

Nomination Package Requirements

Nomination packages must be typed (12 point font) and include: (1) A cover letter from the nominee, and (2) a current resume that is no more than four pages in length. The cover letter must summarize: The nominees' interest in serving on the committee and contributions she/he can make to the work of the committee; any relevant Veterans service activities she/he is currently engaged in; the military branch affiliation and timeframe of military service (if applicable). To promote a balanced membership, please provide information about your personal and professional qualifications and background that would give you a diverse perspective on Gulf War Veterans' matters. Finally, please include in the cover letter the nominee's complete contact information (name, address, email address, and phone number); and a statement confirming that she/he is not a Federally-registered lobbyist. The resume should show professional work experience, and Veterans service involvement, especially service that involves Gulf War Veterans' issues.

Nominations for membership on the Committee must be received by October 9, 2015, no later than 4:00 p.m., Eastern Standard Time. All nomination packages should be sent to:

Dr. Victor Kalasinsky, Veterans Health Administration, Department of Veterans Affairs, 810 Vermont Avenue NW., Washington, DC 20420.

Should you need additional information, you may contact Dr. Kalasinsky at the address above or by phone at (202) 443–5600. (NOTE: This is not a toll-free number.) You may also email the nomination package to *victor.kalasinsky@va.gov* or fax to (202) 495–6155.

Dated: September 1, 2015.

Rebecca Schiller,

Federal Advisory Committee Management Officer.

[FR Doc. 2015–22057 Filed 9–4–15; 8:45 am]

BILLING CODE 8320–01–P

FEDERAL REGISTER

Vol. 80 Tuesday,

No. 173 September 8, 2015

Part II

Department of Homeland Security

6 CFR Part 46

Department of Agriculture

7 CFR Part 1c

Department of Energy

10 CFR Part 745

National Aeronautics and Space Administration

14 CFR Part 1230

Department of Commerce

15 CFR Part 27

Social Security Administration

20 CFR Part 431

Agency for International Development

22 CFR Part 225

Department of Justice

28 CFR Part 46

Department of Labor

29 CFR Part 21

Department of Defense

32 CFR Part 219

Department of Education

34 CFR Part 97

Department of Veterans Affairs

38 CFR Part 16

Environmental Protection Agency

40 CFR Part 26

Department of Health and Human Services

45 CFR Part 46

National Science Foundation

45 CFR Part 690

Department of Transportation

49 CFR Part 11

Federal Policy for the Protection of Human Subjects; Proposed Rules

DEPARTMENT OF HOMELAND SECURITY

6 CFR Part 46

DEPARTMENT OF AGRICULTURE

7 CFR Part 1c

DEPARTMENT OF ENERGY

10 CFR Part 745

NATIONAL AERONAUTICS AND SPACE ADMINISTRATION

14 CFR Part 1230

DEPARTMENT OF COMMERCE

15 CFR Part 27

SOCIAL SECURITY ADMINISTRATION

20 CFR Part 431

AGENCY FOR INTERNATIONAL DEVELOPMENT

22 CFR Part 225

DEPARTMENT OF JUSTICE

28 CFR Part 46

DEPARTMENT OF LABOR

29 CFR Part 21

DEPARTMENT OF DEFENSE

32 CFR Part 219

DEPARTMENT OF EDUCATION

34 CFR Part 97

DEPARTMENT OF VETERANS AFFAIRS

38 CFR Part 16

ENVIRONMENTAL PROTECTION AGENCY

40 CFR Part 26

DEPARTMENT OF HEALTH AND HUMAN SERVICES

45 CFR Part 46

RIN 0937–AA02

NATIONAL SCIENCE FOUNDATION

45 CFR Part 690

DEPARTMENT OF TRANSPORTATION

49 CFR Part 11

Federal Policy for the Protection of Human Subjects

AGENCY: Department of Homeland Security; Department of Agriculture; Department of Energy; National Aeronautics and Space Administration; Department of Commerce; Social Security Administration; Agency for International Development; Department of Justice; Department of Labor; Department of Defense; Department of Education; Department of Veterans Affairs; Environmental Protection Agency; Department of Health and Human Services; National Science Foundation; and Department of Transportation.

ACTION: Notice of proposed rulemaking.

SUMMARY: The departments and agencies listed in this document propose revisions to modernize, strengthen, and make more effective the Federal Policy for the Protection of Human Subjects that was promulgated as a Common Rule in 1991. This NPRM seeks comment on proposals to better protect human subjects involved in research, while facilitating valuable research and reducing burden, delay, and ambiguity for investigators. This proposed rule is an effort to modernize, simplify, and enhance the current system of oversight. The participating departments and agencies propose these revisions to the human subjects regulations because they believe these changes would strengthen protections for research subjects while facilitating important research.

DATES: To be assured consideration, comments must be received at one of the addresses provided below, no later than 5 p.m. on December 7, 2015.

ADDRESSES: You may submit comments, identified by docket ID number HHS–OPHS–2015–0008, by one of the following methods:

- *Federal eRulemaking Portal:http://www.regulations.gov*. Enter the above docket ID number in the ''Enter Keyword or ID'' field and click on ''Search.'' On the next Web page, click on ''Submit a Comment'' action and follow the instructions.
- *Mail/Hand delivery/Courier [For paper, disk, or CD–ROM submissions] to:* Jerry Menikoff, M.D., J.D., OHRP, 1101 Wootton Parkway, Suite 200, Rockville, MD 20852.

Comments received, including any personal information, will be posted without change to *http://www.regulations.gov*.

FOR FURTHER INFORMATION CONTACT: Jerry Menikoff, M.D., J.D., Office for Human Research Protections (OHRP), Department of Health and Human Services, 1101 Wootton Parkway, Suite 200, Rockville, MD 20852; telephone: 240–453–6900 or 1–866–447–4777; facsimile: 301–402–2071; email: *jerry.menikoff@hhs.gov*.

SUPPLEMENTARY INFORMATION:

Executive Summary

Purpose of the Regulatory Action
Summary of the Major Provisions of the Proposed Regulatory Actions
Estimated Costs and Benefits
I. The Rationale for Modernizing the Common Rule
A. The Changing Nature of Research
B. Public Comments, Expert Advice, Stakeholder Dialogue
C. Guiding Principles for Proposed Changes
1. Question for Public Comment
D. Organization of the NPRM
II. Major Proposals To Modernize the Common Rule
A. Proposed Changes to the Scope and Applicability of the Regulations
1. Expanding the Definition of Human Subject to Cover Research With Non-identified Biospecimens (NPRM at §§ ____.102(e) and ____.101(b)(3)(i))
a. NPRM Goals
b. Current Rule
c. ANPRM Discussion
d. NPRM Proposal
i. Alternative Proposals
e. What would change in the definition of ''human subject'' under the primary proposal?
f. Questions for Public Comment
2. Explicit Exclusion of Activities From the Common Rule
a. Exclusion of Activities That Are Deemed Not Research (NPRM at § ____.101(b)(1))
i. Program Improvement Activities (NPRM at § ____.101(b)(1)(i))
(1) NPRM Proposal
(2) Questions for Public Comment
ii. Oral History, Journalism, Biography, and Historical Scholarship Activities (NPRM at § ____.101(b)(1)(ii))
(1) ANPRM Discussion
(2) NPRM Proposal
iii. Criminal Justice Activities (NPRM at § ____.101(b)(1)(iii))
(1) NPRM Proposal
iv. Quality Assurance and Quality Improvement Activities (NPRM at § ____.101(b)(1)(iv))
(1) NPRM Proposal
v. Public Health Surveillance (NPRM at § ____.101(b)(1)(v))
(1) NPRM Proposal
(2) Question for Public Comment
vi. Intelligence Surveillance Activities (NPRM at § ____.101(b)(1)(vi))
(1) NPRM Proposal
b. Exclusion of Activities That Are Low-Risk and Already Subject to Independent Controls (NPRM at § ____.101(b)(2))
i. NPRM Goals
ii. ANPRM Discussion
iii. Educational Tests, Survey Procedures, Interview Procedures, or Observation of Public Behaviors (NPRM at § ____.101(b)(2)(i))
(1) NPRM Proposal
(2) Questions for Public Comment
iv. Research Involving the Collection or Study of Information That Has Been or

Will Be Collected (NPRM at § ____.101(b)(2)(ii))
(1) Current Rule
(2) ANPRM Discussion
(3) NPRM Proposal
(4) Questions for Public Comment
v. Research Conducted by a Government Agency Using Government-Generated or Government-Collected Data (NPRM at § ____.101(b)(2)(iii))
(1) NPRM Proposal
(2) Questions for Public Comment
vi. Certain Activities Covered by HIPAA (NPRM at § ____.101(b)(2)(iv))
(1) ANPRM Discussion
(2) NPRM Proposal
(3) Questions for Public Comment
c. Applicability of Exclusions to the Subparts
i. Current Rule
ii. NPRM Proposals
iii. Questions for Public Comment
3. Proposed Exemptions (NPRM at § ____.104)
a. Making Exempt Research Determinations (NPRM at § ____.104(c))
i. NPRM Goal
ii. Current Rule
iii. ANPRM Discussion
iv. NPRM Proposal
v. Questions for Public Comment
b. Exemptions Subject to the Documentation Requirements of § ____.104(c) and No Other Section of the Proposed Rule
i. Research Conducted in Established or Commonly Accepted Educational Settings (NPRM at § ____.104(d)(1); current Rule at § ____.101(b)(1))
(1) NPRM Goal
(2) Current Rule
(3) NPRM Proposal
(4) Questions for Public Comment
ii. Research and Demonstration Projects Conducted or Supported by a Federal Department or Agency (NPRM at § ____.104(d)(2); Current Rule at § ____.101(b)(5))
(1) NPRM Goal
(2) Current Rule
(3) ANPRM Discussion
(4) NPRM Proposal
(5) Questions for Public Comment
iii. Research Involving Benign Interventions in Conjunction With the Collection of Data fFrom an Adult Subject (NPRM at § ____.104(d)(3))
(1) NPRM Goal
(2) Current Rule
(3) ANPRM Discussion
(4) NPRM Proposal
(5) Questions for Public Comment
iv. Taste and Food Quality Evaluation and Consumer Acceptance Studies (NPRM at § ____.104(d)(4); Current Rule at § ____.101(b)(6))
(1) Question for Public Comment
c. Exemptions Subject to the Documentation Requirements of § ____.104(c) and the Privacy Safeguards Described in § ____.105
i. Questions for Public Comment
ii. Research Involving Educational Tests, Surveys, Interviews, or Observation of Public Behavior if the Information Is Recorded With Identifiers and Even if the Information Is Sensitive (NPRM at § ____.104(e)(1))
(1) NPRM Goals
(2) Current Rule
(3) ANPRM Discussion
(4) NPRM Proposal
(5). Questions for Public Comment
iii. Secondary Research Use of Identifiable Private Information (NPRM at § ____.104(e)(2))
(1) NPRM Goal
(2) Current Rule
(3) ANPRM Discussion
(4) NPRM Proposal
(5) Questions for Public Comment
d. Exemptions Subject to the Documentation Requirements of § ____.104(c), the Privacy Safeguards Described in § ____.105, Limited IRB Review as Described in § ____.111(a)(9), and Broad Consent in Accordance With § ____.116(c)
i. NPRM Goals
ii. Current Rule
iii. ANPRM Discussion
iv. NPRM Proposals
(1) Exemption for the Storage or Maintenance of Biospecimens or Identifiable Private Information for Secondary Research Use (NPRM at § ____.104(f)(1))
(2) Exemption for Secondary Research Use of Biospecimens or Identifiable Private Information Where Broad Consent Has Been Sought and Obtained (NPRM at § ____.104(f)(2))
v. Questions for Public Comment
e. Applicability of Exemptions to the Subparts (NPRM at § ____.104(b); Current Rule at Footnote 1)
i. Current Rule
ii. NPRM Proposals
ii. Questions for Public Comment
f. What would change in the exemptions?
B. Proposed Changes To Obtaining, Waiving, and Documenting Informed Consent (§§ ____.116 and ____.117)
1. Required Elements of Informed Consent (NPRM at § ____.116(a), (b))
a. NPRM Goal
b. Current Rule
c. ANPRM Discussion
d. NPRM Proposals
e. What would change?
f. Question for Public Comment
2. Broad Consent to the Storage, Maintenance and Secondary Research Use of Biospecimens and Identifiable Private Information (NPRM at § ____.116(c), (d))
a. NPRM Goal
b. Current Rule
c. ANPRM Discussion
d. NPRM Proposal
e. What would change?
f. Questions for Public Comment
3. Waiver of Informed Consent or Documentation of Informed Consent (NPRM at §§ ____.116(e), (f) and ____.117)
a. NPRM Goals
b. Current Rule
c. ANPRM Discussion
d. NPRM Proposals
e. What would change?
f. Questions for Public Comment
4. Posting of Consent Forms
a. NPRM Goals
b. NPRM Proposal
c. What would change?
C. Proposed Changes To Protect Information and Biospecimens (NPRM at § ____.105)
1. NPRM Goal
2. Current Rule and Other Regulatory or Statutory Requirements
3. ANPRM Discussion
4. NPRM Proposals
5. What would change?
6. Questions for Public Comment
D. Harmonization of Agency Guidance (NPRM at § ____.101(j))
1. NPRM Goal
2. Current Rule
3. ANPRM Discussion
4. NPRM Proposal
5. What would change?
6. Question for Public Comment
E. Cooperative Research (NPRM and Current Rule at § ____.114) and Proposal To Cover Unaffiliated IRBs Not Operated by an Institution Holding a Federalwide Assurance (NPRM at § ____.101(a))
1. NPRM Goal
2. Current Rule
3. Relevant Prior Proposals and Discussions
4. NPRM Proposals
5. What would change?
6. Questions for Public Comment
F. Changes To Promote Effectiveness and Efficiency in IRB Operations
1. Continuing Review of Research (NPRM at § ____.109(f); Current Rule at § ____.109(e))
a. NPRM Goal
b. Current Rule
c. ANPRM Discussion
d. NPRM Proposals
e. What would change?
2. Expedited Review Procedures and the Definition of ''Minimal Risk'' (NPRM at §§ ____.110 and ____.102(j))
a. NPRM Goal
b. Current Rule
c. ANPRM Discussion
d. NPRM Proposal
e. What would change?
f. Questions for Public Comment
G. Proposed Changes to IRB Operational Requirements
1. Proposed Criteria for IRB Approval of Research (NPRM at § ____.111)
a. NPRM Goals
b. Current Rule
c. ANPRM Discussion
d. NPRM Proposals
e. What would change?
f. Questions for Public Comment
2. Proposed Revisions To IRB Operations, Functions, and Membership Requirements
a. NPRM Goal
b. Current Rule
c. NPRM Proposal
d. What would change?
e. Question for Public Comment
H. Other Proposed Changes
1. Proposal To Extend the Common Rule to All Clinical Trials (With Exceptions) (NPRM at § ____.101(a)(1))
a. NPRM Goals

b. Current Rule
c. ANPRM Discussion
d. NPRM Proposal
e. What Would Change?
f. Questions for Public Comment
2. Changes to the Assurance Process (NPRM at §§ ____.103 and ____.108; Current Rule at § ____.103)
a. NPRM Goal
b. Current Rule
c. NPRM Proposals
d. What would change?
e. Question for Public Comment
3. Department or Agency Discretion About Applicability of the Policy (NPRM at § ____.101(c), (d), (i)) and Discretion Regarding Additional Requirements Imposed by the Conducting or Supporting Department or Agency (NPRM and Current Rule at § ____.124)
a. NPRM Goals
b. Current Rule
c. NPRM Proposals
4. Research Covered by This Policy Conducted in Foreign Countries (NPRM at § ____.101(h))
I. Effective and Compliance Dates of New Rule (NPRM at § ____.101(k))
1. Effective Dates
2. Transition Provisions
a. Research Initiated Prior to the Effective Date of This Subpart (NPRM at § ____.101(k)(1))
b. Use of Prior Collections of Biospecimens (NPRM at § ____.101(k)(2))
III. Regulatory Impact Analyses
IV. Environmental Impact
V. Paperwork Reduction Act
VI. Summary of Comments Received on the 2011 Common Rule ANPRM
VII. Regulatory Text

Executive Summary

Purpose of the Regulatory Action

Individuals who are the subjects of research may be asked to contribute their time and assume risk to advance the research enterprise, which benefits society at large. U.S. federal regulations governing the protection of human subjects in research have been in existence for more than three decades. The Department of Health, Education, and Welfare (HEW) first published regulations for the protection of human subjects in 1974, and the Department of Health and Human Services (HHS) revised them in the early 1980s. During the 1980s, HHS began a process that eventually led to the adoption of a revised version of the regulations by 15 U.S. federal departments and agencies in 1991. The purpose of this effort was to promote uniformity, understanding, and compliance with human subject protections as well as to create a uniform body of regulations across Federal departments and agencies (subpart A of 45 CFR part 46), often referred to as the ''Common Rule'' for the Protection of Human Subjects.

Since the Common Rule was promulgated, the volume and landscape of research involving human subjects have changed considerably. Research with human subjects has grown in scale and become more diverse. Examples of developments include: An expansion in the number and type of clinical trials, as well as observational studies and cohort studies; a diversification of the types of social and behavioral research being used in human subjects research; increased use of sophisticated analytic techniques for use with human biospecimens; and the growing use of electronic health data and other digital records to enable very large data sets to be analyzed and combined in novel ways. Yet these developments have not been accompanied by major change in the human subjects research oversight system, which has remained largely unchanged over the last two decades.

The regulations are codified in each department or agency's title or chapter of the Code of Federal Regulations (CFR). The Common Rule was based on HHS' regulations, 45 CFR part 46, subpart A, and includes identical language in the separate regulations of each department and agency.

Although they have not issued the Common Rule in regulations, three departments and agencies currently comply with all subparts of the HHS protection of human subjects regulations at 45 CFR part 46. These are the Central Intelligence Agency (CIA), the Department of Homeland Security (DHS), and the Social Security Administration (SSA). DHS, and SSA are joining this proposed rulemaking with the intent of codifying the final rule in their own agency regulations.

Pursuant to Executive Order 12333 of December 4, 1981, as amended, elements of the Intelligence Community must comply with the guidelines issued by the Department of Health and Human Services regarding research on human subjects found in 45 CFR part 46. This proposed rulemaking does not supersede the Executive Order. The Office of the Director of National Intelligence and the CIA will continue to adhere to the HHS guidelines, pursuant to the Executive Order, when the final rule is implemented.

DHS, created after issuance of the Common Rule, is required by statute (Pub. L. 108–458, title VIII, section 8306) to comply with 45 CFR part 46, or with equivalent regulations promulgated by the Secretary of Homeland Security or his designee. This proposed rulemaking initiates the process of promulgating equivalent regulations, consistent with statute. Once DHS executes a final rule, DHS will comply with the DHS regulations as the requirements will be equivalent to compliance with HHS regulations at 45 CFR part 46, subpart A.

SSA was separated from HHS in 1995 and, pursuant to the transition rules provided in Section 106 of title 1 of Public Law 103–296, must apply all regulations that applied to SSA before the separation, absent action by the Commissioner. Once the final rule is codified in SSA regulations, SSA will follow the SSA regulations instead of HHS regulations at 45 CFR part 46, subpart A. See Public Law 103–296 § 106(b), 108 Stat. 1464, 1476.

Another department is joining this proposed rulemaking. The Department of Labor (DOL) is not a signatory to the current Common Rule, and is joining this proposed rulemaking in order to promulgate the Common Rule in DOL regulations and to apply the regulations to human subjects research that DOL may conduct or support, pending the scope of the final rule.

Finally, note that there are two current Common Rule agencies that are not listed as part of this proposed rulemaking. The Department of Housing and Urban Development (HUD) supports this proposal, but due to certain statutory prepublication requirements governing HUD rules, HUD will adopt this proposal through a separate rulemaking. The Consumer Product Safety Commission (CPSC), subject to Commission vote, also intends to adopt this proposed rule through a separate rulemaking.

On July 26, 2011, the Office of the Secretary of HHS, in coordination with the Executive Office of the President's Office of Science and Technology Policy (OSTP), published an advanced notice of public rulemaking (ANPRM) to request comment on how current regulations for protecting human subjects who participate in research might be modernized and revised to be more effective.[1] The ANPRM sought comment on how to better protect human subjects who are involved in research while facilitating valuable research and reducing burden, delay, and ambiguity for investigators.

Since the publication of the ANPRM, science has continued to advance, as has the dialogue regarding the changing nature of research and the preferred balance of protections for research participants among the principles of respect for persons, beneficence, and justice. Important elements of that debate have centered on the appropriate level of transparency in government and medicine and how patient and research participant expectations should be incorporated into government policies.

[1] 76 FR 44512 (Jul. 26, 2011).

These factors have helped shape the development of the regulatory actions proposed in this NPRM.

The proposal also benefits from public comments submitted in response to more recent policy proposals regarding specific topics such as informed consent through the Office for Human Research Protection (OHRP)'s Draft Guidance on Disclosing Reasonably Foreseeable Risks in Research Evaluating Standards of Care [2] and the use of a single institutional review board (IRB) for multi-site research studies through the National Institutes of Health (NIH)'s Draft Policy on the Use of a Single Institutional Review Board for Multi-Site Research.[3]

Finally, the NPRM more thoroughly addresses behavioral and social science research perspectives and the broader types of research conducted or otherwise supported by the other Common Rule agencies. Similarly, the proposal benefits from continuing efforts at HHS to harmonize human subjects policies, particularly between OHRP and the U.S. Food and Drug Administration (FDA).

Summary of the Major Provisions of the Proposed Regulatory Action

The goals of the NPRM are to increase human subjects' ability and opportunity to make informed decisions; reduce potential for harm and increase justice by increasing the uniformity of human subject protections in areas such as information disclosure risk, coverage of clinical trials, and coverage of IRBs; and facilitate current and evolving types of research that offer promising approaches to treating and preventing medical and societal problems through reduced ambiguity in interpretation of the regulations, increased efficiencies in the performance of the review system, and reduced burdens on researchers that do not appear to provide commensurate protections to human subjects. It is hoped that these changes will also build public trust in the research system.

An example of some major changes being proposed that will better protect research subjects and help build public trust are the rules relating to informed consent. With regard to informed consent in general (such as consent to participating in clinical trials), the rules would be significantly tightened to make sure that the process becomes more meaningful. Consent forms would no longer be able to be unduly long documents, with the most important information often buried and hard to find. They would need to give appropriate details about the research that is most relevant to a person's decision to participate in the study, such as information a reasonable person would want to know, and present that information in a way that highlights the key information. In addition, to assure that these rules do indeed change current practices, there will be a one-time posting requirement for the consent forms for clinical trials, so that anyone drafting a consent form will do so knowing that it will eventually be subject to public scrutiny.

In addition, informed consent would generally be required for secondary research with a biospecimen (for example, part of a blood sample that is left over after being drawn for clinical purposes), even if the investigator is not being given information that would enable him or her to identify whose biospecimen it is. Such consent would not need to be obtained for each specific research use of the biospecimen, but rather could be obtained using a ''broad'' consent form in which a person would give consent to future unspecified research uses.

The NPRM also attempts to strengthen the effectiveness and efficiency of the oversight system by making the level of review more proportional to the seriousness of the harm or danger to be avoided. Research that poses greater risk to subjects should receive more oversight and deliberation than less risky research. The NPRM seeks to avoid requirements that do not enhance protection and impose burden, which can decrease efficiency, waste resources, erode trust, and obscure the true ethical challenges that require careful deliberation and stakeholder input. Cumbersome and outdated regulatory standards overwhelm and distract institutions, IRBs, and investigators in ways that stymie efforts to appropriately address the real risks and benefits of research.

The result of these types of changes, as the NPRM proposes to implement them, is that some studies that currently require IRB review would now become exempt. Some that are currently exempt would specifically be declared as outside the scope of the regulations (''excluded''), and thus would not require any administrative or IRB review. Further, in terms of determining when a study is exempt, a web-based ''decision tool'' will be created. That decision tool will provide a determination of whether or not a study is exempt. That result, so long as the tool was provided with accurate information, will be presumed by the Common Rule agencies to be an appropriate determination of exempt status. Thus, it is expected that in many instances the tool would be used by the investigators themselves, thus obviating both the need for further review and the concern that the institution might be subjecting itself to future liability by allowing investigators to use the tool. For all of the excluded and exempt research activities, this NPRM also affirms the importance of applying the ethical principle of respect for persons, in addition to the importance of abiding by this principle in fully regulated non-exempt research involving human subjects.

The following list encompasses the most significant changes to the Common Rule proposed in the NPRM:

(1) Improve informed consent by increasing transparency and by imposing stricter new requirements regarding the information that must be given to prospective subjects, and the manner in which it is given to them, to better assure that subjects are appropriately informed before they decide to enroll in a research study.

(2) Generally require informed consent for the use of stored biospecimens in secondary research (for example, part of a blood sample that is left over after being drawn for clinical purposes), even if the investigator is not being given information that would enable him or her to identify whose biospecimen it is. That consent would generally be obtained by means of broad consent (*i.e.,* consent for future, unspecified research studies) to the storage and eventual research use of biospecimens.

(3) Exclude from coverage under the Common Rule certain categories of activities that should be deemed not to be research, are inherently low risk, or where protections similar to those usually provided by IRB review are separately mandated.

(4) Add additional categories of exempt research to accommodate changes in the scientific landscape and to better calibrate the level of review to the level of risk involved in the research. A new process would allow studies to be determined to be exempt without requiring any administrative or IRB review. Certain exempt and all non-exempt research would be required to provide privacy safeguards for biospecimens and identifiable private information. New categories include:

a. certain research involving benign interventions with adult subjects;

[2] 79 FR 63630 (Oct. 24, 2014).

[3] National Institutes of Health. (2014, December 14). Request for Comments on the Draft NIH Policy on the Use of a Single Institutional Review Board for Multi-Site Research. See more at: *http://grants.nih.gov/grants/guide/notice-files/NOT-OD-15-026.html#sthash.fmjlNRi6.dpuf.* Retrieved from National Institutes of Health, Office of Extramural Research: *http://grants.nih.gov/grants/guide/notice-files/NOT-OD-15-026.html.*

b. research involving educational tests, surveys, interviews or observations of public behavior when sensitive information may be collected, provided that data security and information privacy protections policies are followed;

c. secondary research use of identifiable private information originally collected as part of a non-research activity, where notice of such possible use was given;

d. storing or maintaining biospecimens and identifiable private information for future, unspecified secondary research studies, or conducting such studies, when a broad consent template to be promulgated by the Secretary of HHS is used, information and biospecimen privacy safeguards are followed, and limited IRB approval of the consent process used is obtained.

(5) Change the conditions and requirements for waiver or alteration of consent such that waiver of consent for research involving biospecimens (regardless of identifiability) will occur only in very rare circumstances.

(6) Mandate that U.S. institutions engaged in cooperative research rely on a single IRB for that portion of the research that takes place within the United States, with certain exceptions. To encourage the use of IRBs that are otherwise not affiliated with or operated by an assurance-holding institution (''unaffiliated IRBs''), this NPRM also includes a proposal that would hold such IRBs directly responsible for compliance with the Common Rule.

(7) Eliminate the continuing review requirement for studies that undergo expedited review and for studies that have completed study interventions and are merely analyzing data or involve only observational follow-up in conjunction with standard clinical care.

(8) Extend the scope of the policy to cover all clinical trials, regardless of funding source, conducted at a U.S. institution that receives federal funding for non-exempt human subjects research.

In sum, the proposed modifications described above are designed to continue to uphold the ethical principles upon which the Common Rule is based, as applied to the current social, cultural, and technological environment.

The legal authority for the departments and agencies that are signatories to this action is as follows:

Department of Homeland Security, 5 U.S.C. 301; Public Law 107–296, sec. 102, 306(c); Public Law 108–458, sec. 8306. Department of Agriculture, 5 U.S.C. 301. Department of Energy, 5 U.S.C. 301; 42 U.S.C. 7254. National Aeronautics and Space Administration, 5 U.S.C. 301. Department of Commerce, 5 U.S.C. 301. Social Security Administration, 5 U.S.C. 301; 42 U.S.C. 289(a). Agency for International Development, 5 U.S.C. 301. Department of Justice, 5 U.S.C. 301; 28 U.S.C. 509–510. Department of Labor, 5 U.S.C. 301; 29 U.S.C. 551. Department of Defense, 5 U.S.C. 301. Department of Education, 5 U.S.C. 301; 20 U.S.C. 1221e–3, 3474. Department of Veterans Affairs, 5 U.S.C. 301; 38 U.S.C. 501, 7331, 7334. Environmental Protection Agency, 5 U.S.C. 301. Department of Health and Human Services, 5 U.S.C. 301; 42 U.S.C. 289. National Science Foundation, 5 U.S.C. 301. Department of Transportation, 5 U.S.C. 301.

Estimated Costs and Benefits

Table 1 summarizes the quantified and non-quantified benefits and costs of all proposed changes to the Common Rule. Over the 2016–2025 period, present value benefits of $2,629 million and annualized benefits of $308 million are estimated using a 3 percent discount rate; present value benefits of $2,047 million and annualized benefits of $291 million are estimated using a 7 percent discount rate. Present value costs of $13,342 million and annualized costs of $1,564 million are estimated using a 3 percent discount rate; present value costs of $9,605 million and annualized costs of $1,367 million are estimated using a 7 percent discount rate. Non-quantified benefits include improved human subjects protections in clinical trials and biospecimen research not currently subject to oversight; enhanced oversight of research reviewed by unaffiliated IRBs; increased uniformity in regulatory requirements among Common Rule agencies; standardization of human subjects protections when variation among review IRBs is not warranted; revised informed consent forms and processes; improved protection of biospecimens and individually identifiable private information; and increased transparency of Common Rule agency-supported clinical trials to inform the development of new consent forms. Non-quantified costs include the time needed for consultation among Common Rule agencies before federal guidance is issued; and the time needed by investigators to obtain, document, and track the permissible uses of biospecimens and identifiable private information for secondary research use.

TABLE 1—ACCOUNTING TABLE OF BENEFITS AND COSTS OF ALL PROPOSED CHANGES

Benefits	Present value of 10 years by discount rate (millions of 2013 dollars)		Annualized value over 10 years by discount rate (millions of 2013 dollars)	
	3 Percent	7 Percent	3 Percent	7 Percent
Quantified Benefits	2,629	2,047	308	291
Non-quantified Benefits				
Improved human subjects protections in clinical trials and biospecimen research not currently subject to oversight; enhanced oversight in research reviewed by unaffiliated IRBs; increased uniformity in regulatory requirements among Common Rule agencies; ethical benefit of respecting an individual's wishes in how his or her biospecimens are used in future research; standardization of human subjects protections when variation among review IRBs is not warranted; improved informed consent forms and processes; improved protection of biospecimens and individually identifiable private information; better ensuring availability of biospecimens for future research activities; and increased transparency of Common Rule-supported clinical trials to inform the development of new consent forms.				
Costs	3 Percent	7 Percent	3 Percent	7 Percent
Quantified Costs	13,342	9,605	1,564	1,367
Non-quantified Costs				
Time for consultation among Common Rule agencies before federal guidance is issued; time for investigators to obtain consent for secondary use of biospecimens or identifiable private information.				

I. The Rationale for Modernizing the Common Rule

A. The Changing Nature of Research

In the last two decades there has been a paradigm shift in how research is conducted. Evolving technologies, including imaging, mobile technologies, and the growth in computing power have changed the scale of information collected in many disciplines. Computer scientists, engineers, and social scientists are developing techniques to integrate different types of data so they can be combined, mined, analyzed, and shared. Research has also increased, evolved, and diversified in other areas, such as national security, crime and crime prevention, economics, education, and the environment, using a wide array of methodologies in the social sciences and multidisciplinary fields. The advent of sophisticated computer software programs, the internet, and mobile technology has created new areas of research activity, particularly within the social and behavioral sciences. In biomedical science, the Human Genome Project laid the foundation for precision medicine and promoted an environment of data sharing and innovation in analytics and technology, and drew attention to the need for policies that support a changing research landscape. New technologies, including genomic sequencing, have quickly led to exponential growth in the data to which investigators have access. The sheer volume of data that can be generated in research, the ease with which it can be shared, and the ways in which it can be used to identify individuals were simply not possible, or even imaginable, when the Common Rule was first adopted.

Research settings are also shifting. While much biomedical research continues to be conducted in academic medical centers, more research is being conducted in clinical care settings, thus combining research and medical data. Biospecimen repositories and large databases have made it easier to do research on existing biospecimens and data. Clinical research networks connected through electronic health records (EHRs) have developed methods for extracting clinical data for research purposes and are working toward integration of research data into EHRs in a meaningful way. The overall volume of research has increased across the board, with growing reliance on research networks and multi-site studies. Large cohort studies number well into the hundreds in the United States alone and many collect biospecimens and data on the same people over many years. Recent trends clearly show that the scientific community recognizes the value of data sharing and open-source resources and understands that pooling intellectual resources and capitalizing on efficient uses of data and technology represent the best ways to advance knowledge.

At the same time, the level of public engagement in the research enterprise has changed; more people want to play an active role in research, particularly related to health, and they have different expectations than when the Common Rule was first established. A more participatory research model is emerging in social, behavioral, and biomedical research, one in which potential research subjects and communities express their views about the value and acceptability of research studies. This participatory model has emerged alongside a broader trend in American society, facilitated by the widespread use of social media, in which Americans are increasingly sharing identifiable personal information and expect to be involved in decisions about how to further share the personal information, including health-related information that they have voluntarily chosen to provide. In many ways, these changes are extensions of the fact that over the past half-century, rather than being passive recipients of health advice and treatment, patients have gradually become more active in decisions about their health and health care. The shift from a paternalistic research environment to one where participants are active partners in biomedical and behavioral research is a critical development in human subjects research.

As technology evolves, so does the nature of the risks and benefits of participating in certain types of research. Many studies do not involve interaction with research subjects, but instead involve, for example, analyzing information obtained from medical records, administrative claims data, education records, criminal justice records, research data shared through data repositories, and existing biospecimens stored in repositories. Risks related to these types of research studies are largely informational, not physical; that is, harms could result primarily from the inappropriate release of information and not from the research interventions themselves. Nonetheless, those harms can be significant.

New methods, more powerful computers, and easy access to large administrative datasets produced by local, state, and federal governments have meant that some types of data that formerly were treated as non-identified can now be re-identified through combining large amounts of information from multiple sources. In 2013, scientists demonstrated that the identity of individual research subjects could be ascertained by collating and analyzing certain types of genomic data, including genomic data from publicly available information sources.[4] Thus, the possibility of fully identifying biospecimens and some types of data from which direct identifiers had been stripped or did not originally include direct identifiers has grown, requiring vigilance to ensure that such research be subject to appropriate oversight. Most importantly, people want to be asked for their permission. A growing body of survey data show that many prospective participants want to be asked for their consent before their biospecimens are used in research.[5 6 7 8]

Because of these shifts in science, technology, and public engagement expectations, a wide range of stakeholders have raised concerns about the limitations of the existing framework, arguing for a re-evaluation of how the fundamental principles that underlie the Common Rule —respect for persons, beneficence, and justice—are applied in practice to the myriad new contexts in which U.S. research is conducted in the 21st century.[9 10] Dialogue focuses around whether the current system:

- Is sufficiently supportive of a participant-centered research model that adequately respects participants as partners;
- is not sufficiently risk-based, resulting in both over- and under-regulation of research activities; [11 12 13]

[4] Gymrek M *et al.* ''Identifying personal genomes by surname inference''. *Science* 339.6117(2013) 0: 321–324.

[5] Kaufman DJ *et al.* Public opinion about the importance of privacy in biobank research. *American Journal of Human Genetics* 2009 Nov;85(5):643–654.

[6] Vermeulen E *et al.* A trial of consent procedures for future research with clinically derived biological samples. *British Journal of Cancer* 2009 Nov 3;101(9):1505–1512.

[7] Trinidad SB *et al.* Research practice and participant preferences: The growing gulf. *Science* 2011 Jan 21; 331(6015):287–288.

[8] Simon CM et al. Active choice but not too active: Public perspectives on biobank consent models. *Genetics in Medicine.* 2011 Sep;13(9):821–831.

[9] Emanuel EJ, Wood A, Fleischman A, et al. Oversight of human participants research: Identifying problems to evaluate reform proposals. *Annals of Internal Medicine* 2004;141(4):282–291.

[10] Maschke K. Human research protections: Time for regulatory reform? *Hastings Center Report.* 2008 Mar-Apr; 38(2):19–22.

[11] Kim S, Ubel P, De Vries R. Pruning the regulatory tree. *Nature* 2009 Jan 29;457(7229):534–535.

• is sufficiently tailored to new and emerging areas of research, including social and behavioral research and research involving the collection and use of genetic information; [14 15 16 17 18 19]

• effectively informs subjects of psychological, informational, or privacy risks; [20 21 22]

• adequately accounts for the needs of a ''learning'' healthcare system for continual quality improvement; [23 24 25]

• provides sufficient mechanisms to ensure the consistency, quality, and accountability of IRB decision-making.[26 27 28 29]

[12] Wendler D, Varma S. Minimal risk in pediatric research. *Journal of Pediatrics.* 2006 Dec;149(6):855–861.

[13] Infectious Disease Society of America. Grinding to a halt: The effects of the increasing regulatory burden on research and quality improvement efforts. *Clinical Infectious Diseases* 2009 Aug 1;49(3):328–335.

[14] National Research Council. *Protecting Participants and Facilitating Social and Behavioral Sciences Research.* Washington, DC: National Academies Press, 2003.

[15] Anderlik M. Commercial biobanks and genetic research: Ethical and legal issues. *American Journal of Pharmacogenomics* 2003;3(3):203–215.

[16] Schrag ZM. How talking became human subjects research: The Federal regulation of the social sciences, 1965–1991. *Journal of Policy History* 2009 January; 21(01):3–37.

[17] Hansson MG *et al.* Should donors be allowed to give broad consent to future biobank research? *Lancet Oncology* 2006 Mar; 7(3):266–269.

[18] Murphy J *et al.* Public perspectives on informed consent for biobanking. *American Journal of Public Health* 2009 December; 99(12):2128–2134.

[19] Kaufman DJ *et al.* Public opinion about the importance of privacy in biobank research. *American Journal of Human Genetics* 2009 Nov; 85(5):643–654.

[20] Paasche-Orlow MK, Taylor HA, Brancati F. Readability standards for informed-consent forms as compared with actual readability. *New England Journal of Medicine* 2003 Feb 20; 348(8):721–726.

[21] Schneider CE. The Hydra. *Hastings Center Report* 2010 Jul–Aug; 40(4):9–11.

[22] Albala I, Doyle M, Appelbaum PS. The evolution of consent forms for research: A quarter century of changes. *IRB Ethics & Human Research* 2010 May–June; 32(3):7–11.

[23] Faden RR, Beauchamp TL, Kass NE. Informed consent, comparative effectiveness, and learning health care. *New England Journal of Medicine* 2014 Feb 20;370(8):766–768.

[24] Dziak K *et al.* Variations among institutional review board reviews in a multisite health services research study. *Health Services Research* 2005 Feb; 40(1):279–290.

[25] Lynn J *et al.* The ethics of using quality improvement methods in health care. *Annals of Internal Medicine* 2007 May 1;146(9):666–673.

[26] Heimer CA *et al.* Regulating creativity: Research and survival in the IRB iron cage. *Northwestern University Law Review* 2007; 101:593–641.

[27] Green LA *et al.* Impact of institutional review board practice variation on observational health services research. *Health Services Research* 2006 Feb; 41(1):214–230.

[28] Jansen LA. Local IRBs, multicenter trials, and the ethics of internal amendments. *IRB* 2005 Jul–Aug;27(4):7–11.

[29] Schrag Z. *Ethical Imperialism.* Baltimore, MD: Johns Hopkins University Press, 2010.

B. Public Comments, Expert Advice, Stakeholder Dialogue

The revisions to the Common Rule proposed here are based upon a variety of sources of public, stakeholder, and expert comments and advice. First, the NPRM more thoroughly addresses social science and behavioral research perspectives, benefiting from guidance provided by a National Research Council's consensus report entitled ''Proposed Revisions to the Common Rule for the Protection of Human Subjects in the Behavioral and Social Sciences.'' [30] The Report was commissioned to ensure that the issues related to research involving human subjects in social and behavioral research would be addressed appropriately, in view of what had been said in the ANPRM. The Panel made numerous recommendations, including recommendations about what research studies should not undergo review, about calibrating the level of IRB review to the level of risk, about the desirability of privacy and confidentiality protections in social and behavioral research other than those of the Health Insurance Portability and Accountability Act of 1996 (HIPAA), and about improving informed consent by placing greater emphasis on the process of consent. The NPRM revises some of the ANPRM proposals in light of those recommendations.

Second, since the publication of the ANPRM, HHS has continued to solicit public comment on a variety of human subjects related issues, including consent, the use of a single IRB for multi-site studies, and sharing of genomic data. Although these policies were more specific than the issues raised in the ANPRM, the responses received from public comments provide insight for refining the proposals initially put forward in the ANPRM. Of particular interest:

• NIH's proposal that it expects the use of a single IRB for all multi-site research studies funded or conducted by the NIH.[31] Under that proposal, all domestic sites of a multi-site study would be expected, as a condition of NIH funding, to use a single IRB of record. In response to this proposal, NIH received 165 comments from a range of stakeholders, including investigators, IRB members, and members of the public. The majority of respondents were supportive; however concerns were raised that it would be expensive and time-consuming to identify a single IRB for each new multi-site study.

• OHRP's draft guidance discussing the required content of consent language for research done within the standard of care.[32] In August of 2013, prior to the publication of the draft guidance document, HHS held a public meeting to hear from the community on issues raised during the debate surrounding the SUPPORT study.[33] The public meeting and the draft guidance document spurred a significant public discussion about the nature of the information included in informed consent forms, specifically how investigators should communicate the risks of research studies done within the standard of care. A total of 93 comments were received from bioethicists, investigators and research institutions, hospitals and physicians, IRB members, patient advocates, and industry.

• To enhance human subject protections and reduce regulatory burden, OHRP and FDA have been actively working to harmonize the agencies' regulatory requirements and guidance for human subject research, and the FDA's draft guidance, ''Use of Electronic Informed Consent in Clinical Investigations'' was developed as part of these efforts. The draft guidance was issued in conjunction with an OHRP **Federal Register** notice soliciting comment on the whether joint final guidance would be useful for the regulated community, and whether FDA's draft guidance would be appropriate for all research regulated under 45 CFR part 46, such as social and behavioral research studies. Comments were received largely favoring joint guidance, but with separate sections addressing research regulated solely by 45 CFR part 46.

• NIH's proposal to promote sharing of large-scale human genomic data generated from studies funded or conducted by NIH.[34] The policy lays out an expectation that investigators generating genomic data get consent for future research use of those data. The NIH received 107 comments on the policy, including many that addressed

[30] National Research Council of the National Academies. (2014). Proposes Revisions to the Common Rule for the Protections of Human Subjects in the Behavioral and Social Science. The National Academies Press, 13–168. Retrieved from *http://www.nap.edu/catalog/18614/proposed-revisions-to-the-common-rule-for-the-protection-of-human-subjects-in-the-behavioral-and-social-sciences.*

[31] National Institutes of Health. (2014, December 14). Request for Comments on the Draft NIH Policy on the Use of a Single Institutional Review Board for Multi-Site Research. See more at: *http://grants.nih.gov/grants/guide/notice-files/NOT-OD-15-026.html#sthash.fmjlNRi6.dpuf.* Retrieved from National Institutes of Health, Office of Extramural Research: *http://grants.nih.gov/grants/guide/notice-files/NOT-OD-15-026.html.*

[32] 79 FR 63630 (Oct. 24, 2014).

[33] 78 FR 48163 (Aug 7, 2013).

[34] 79 FR 51345 (Aug. 28, 2014).

the concept of broad consent for unspecified future research use.

There have also been developments on the legislative front that have informed the discussions leading up to this NPRM. In December of 2014, the Newborn Screening Saves Lives Reauthorization Act of 2014 (Pub. L. 113–240), was signed into law. The new law makes a number of changes relevant to the HHS regulations for protecting research subjects, including declaring that research with newborn dried blood spots that is federally funded pursuant to the Public Health Service Act is to be considered research with human subjects, and the provisions allowing IRBs to waive consent will not apply. These changes will be effective until updates to the Common Rule are promulgated. In addition, in April of 2015, the Medicare Access and CHIP Reauthorization Act of 2015 (Pub. L. 114–10) was passed. That law requires HHS to issue a clarification or modification of the Common Rule with regard to how they apply to activities involving clinical data registries.

Most recently, with the launch of the President's Precision Medicine Initiative (PMI),[35] [36] the Federal Government is proposing a new research cohort based on a model that puts participants at the center.[37] To understand participant preferences the White House and PMI agencies have been hosting a series of roundtables and public workshops about public expectations for how participants want to engage in research today. These discussions have included individuals from many sectors, including prospective research participants, patients and patient advocates, privacy experts, bioethicists, academic and industry investigators, data scientists, technology innovators, healthcare institutions and providers. The government has heard many perspectives, with much alignment around the central tenet that participants should be active partners in research, and not merely passive subjects of research studies. Many are seeking a research environment where they can contribute to the greater good and have transparency into the research being conducted using their specimens and data. The conversations have focused on promoting the ethical principles of respect for persons, beneficence, and justice, as well as promoting other protections, such as data security and privacy.

C. Guiding Principles for Proposed Changes

In 1979, the Belmont Report [38] was predicated on three principles that were felt to be central to shaping an ethical framework for the conduct of research with human subjects. The three ethical principles are respect for persons, beneficence, and justice. Interpretation of, and balancing among, these three principles played a major role in shaping what became the development the federal regulations that have become known as the Common Rule. The preamble to the proposal considers whether and how the interpretation of these fundamental principles might be updated within the context of the current technological, social, cultural, and ethical environment. That consideration involves explicitly identifying the interplay among the principles. The Common Rule provides a framework for how researchers and IRBs weigh the often conflicting implications of these three principles.

Beneficence: Individuals who participate in research contribute their time and may assume significant risks to advance the research enterprise. Their valuable contributions produce knowledge that benefits society at large. The Belmont Report describes the principle of beneficence as the goal of maximizing possible benefits of research and minimizing possible harms. This principle has been interpreted to, in part, emphasize the benefit associated with the knowledge that might be generated by a research study. Evaluating beneficence requires examining the likelihood that knowledge would be generated, and how important or useful that knowledge might be to the population. When more weight is given to research that has the potential to generate a great deal of knowledge, particularly knowledge that could be very useful to society (such as how to treat serious diseases that are currently untreatable), policies would lean in favor of encouraging and facilitating more of that type of research.

A distinct aspect of the principle of beneficence concerns the benefits and risks to the specific persons who would be participating in a particular research study. In the example of a randomized clinical trial comparing two treatments for a disease, the benefits and risks to the subjects in the trial are distinct from the possible benefits to society as a whole from learning which of the two treatments is better. This aspect of beneficence assumes that there are limits on the risks to which people should be subject, even if they are willing to undergo those risks.

Society is in an information age. In all facets of one's life information about that person is generated, stored, shared, analyzed, and often provides tremendous societal value. People share information about themselves with large numbers of people with the click of a button, and this trend of rapid and widespread sharing is only likely to grow. The increase in concern about unauthorized and inadvertent information disclosure, in combination with newer research techniques that increase the volume and nature of identifiable data suggest the need for the Common Rule to more explicitly address data security and privacy protection.

Of particular interest for this proposal is addressing risks from inappropriate disclosure of information generated from biospecimens. One way to protect subjects from such risks is to bring under oversight research for which risks are greater of subjects being identified and information being inappropriately disclosed. Although it may be difficult to identify individuals from their non-identified biospecimens at present, and most investigators would have no need to do so unless they were seeking additional associated phenotypic information, certain technologies and methods can be used to generate data that are unique to the individual who provides the biospecimen, and those data can sometimes be combined with other data sources to identify the individual. In the future, technologies will facilitate the use and analysis of greater variety and volumes of information, and there is a possibility that it will be increasingly difficult, if not impossible, to make biospecimens fully non-identified. In fact, a number of reports have already demonstrated the ability to re-identify individuals from biospecimens or data that lack direct identifiers.[39] [40] As analytic techniques become more sophisticated and large

[35] The White House, Office of the Press Secretary. (2015, January 30). Fact Sheets: President Obama's Precision Medicine Initiative. Retrieved from The White House: *https://www.whitehouse.gov/the-press-office/2015/01/30/fact-sheet-president-obama-s-precision-medicine-initiative.*

[36] Collins FS, Varmus H. A New Initiative on Precision Medicine. *N Engl J Med* 2015 Feb; 372:793–795.

[37] See also *http://www.scientificamerican.com/article/big-precision-medicine-plan-raises-patient-privacy-concerns/, http://www.nih.gov/precisionmedicine/*, and *http://www.nih.gov/precisionmedicine/.*

[38] National Commission for the Protection of Human Subjects of Biomedical and Behavioral Research. (1979). Belmont Report. Washington, DC: U.S. Department of Health & Human Services. Available at: *http://www.hhs.gov/ohrp/humansubjects/guidance/belmont.html.*

[39] Rothstein MA. Is deidentification sufficient to protect health privacy in research? *American Journal of Bioethics* Sep 2010; 10(9): 3–11.

[40] El Emam K et al. A systematic review of re-identification attacks on health data. *PLoS One* 2011; 6(12):e28071.

datasets become more accessible, it will not be possible to guarantee that an individual could never be identified from a biospecimen or combination or data sources, particularly if whole genome sequencing is conducted.

Respect for Persons: The Belmont Report describes this concept as the notion of treating people as autonomous agents, and allowing them to make choices based on their own judgments and opinions. Inherent in the principle of autonomy is the concept of transparency—clearly providing the information necessary for the research participant to make such judgments. Transparency requires a clear articulation of risks, potential benefits, and alternatives to participating in a research study, as well as the purpose of the research. The principle of autonomy encompasses the value ascribed to an individual's right to know how one's data is being used and who will have access to it. As such autonomy also covers the paired concept of protecting those persons who lack the capability to make such decisions. There are a variety of different ways of demonstrating respect for persons.

Obtaining informed consent from human subjects for the collection and analysis of information about them is one means of implementation of respect for persons in the research context. Informed consent is designed to ensure that each individual approached to participate in a research study fully understands the risks and potential benefits of the study so that they have sufficient information to make an individualized calculation as to whether or not the tradeoffs inherent in participation are worth it for them to agree to participate. Both the potential harms and benefits tend to be greater in the context of a clinical trial where subjects are randomized to one or another of two possible treatments with significantly different suspected risks than in situations where subjects are simply asked to provide, for instance, a urine sample.

Notice, in which individuals are informed about how data will be used, but explicit consent is not obtained, is another means of facilitating transparency. Notice is sometimes used in the context of informing people about how data collected for non-research purposes (*e.g.,* when providing information in the context of applying for public benefits) might be used for either general or specific research purposes. Another method for showing respect for persons with regard to using data about them for research could be providing them with a right to opt out of such research, by, for example, filing a form stating such a wish with the holder of the data.

Related, implicit consent might be obtained when a research subject completes a questionnaire. If they did not wish to provide the information, presumably they would not be answering the questions. The NPRM contains a number of provisions that are designed to further promote respect for participants through increases in both transparency and opportunities for consent.

Justice: The Belmont Report describes this principle as being about fairness in terms of who receives the benefits from research and who bears its burdens. One of the most direct applications of the principle of justice to the Common Rule relates to determining who is studied and how subjects are selected. This principle also is relevant to protection of vulnerable populations. In addition, the idea of justice is relevant to one of core goals of this NPRM: Clarifying important aspects of the Common Rule where there has been ambiguity in interpretation. To the extent that IRBs and others interpret the regulations in significantly different ways, the result is that participants in research can end up being treated in very different ways, even when they are participating in the same study. Thus this idea is embedded in all of the NPRM's attempts to make sure that these rules are applied in a more uniform and consistent manner.

The three ethical principles of the Belmont Report often cannot all be fulfilled at the same time. In many cases, it will be necessary to choose which of those principles will deserve the greatest adherence. This NPRM, at its heart, represents an attempt to evaluate the weights to be applied to each of these three core principles in a variety of specific contexts. Giving greater weight to one of the principles will frequently mean a decreased ability to fulfill one of the other principles. By necessity, value judgments, influenced by the social norms of the time, drive the implementation of the broad principles underlying the Belmont Report. The efficacy of the oversight system also requires proportionality in weighing the application of these three principles. This is reflected in the analysis that follows, in terms of evaluating the specific aspects of beneficence, respect for persons, and justice that relate to a particular issue, and weighing those aspects against one another. Research that poses greater risk should receive more attention and deliberation than less risky research, and the degree and type of oversight should be commensurate with the level of risk. In addition, requirements that do not enhance protection but that impose burden can increase inefficiency, waste resources, erode trust, and obscure the ethical challenges that require careful deliberation and stakeholder input. Cumbersome and outdated regulatory standards overwhelm and distract oversight bodies and other stakeholders from appropriately addressing the real risks and benefits of research.

There is tremendous support for research in this country. American society values advances in knowledge and has reaped the reward of many key insights that have led to increases in quality of life and a doubling of our life expectancy in the last century. There would not have been such strides in medical and behavioral research without the willingness of individuals to join research studies. Participants are told that they are not likely to benefit directly from any given study, yet they choose to participate for the greater good. Beneficence is a powerful driver. On the other hand, members of the public deserve, and indeed now expect, to know how publicly-funded research is being conducted and overseen, and need to have confidence that the interests of research participants are adequately protected. Transparency is key for developing trust, especially between investigators, funders, regulators, and the public.

Our reassessment of these ethical principles in the context of current technology and social norms suggests the need for changes to the Common Rule that: (1) Increase subject autonomy by increasing human subjects' ability and opportunity to make informed decisions; (2) reduce potential for harm and increase justice by increasing the uniformity of human subject protections in areas such as information disclosure risk, coverage of clinical trials, and coverage of IRBs; and (3) increase beneficence by facilitating current and evolving types of research that offer promising approaches to treating and preventing medical and societal problems though reduced ambiguity in interpretation of the regulations, increased efficiencies in the performance of the review system, and reduced burdens on researchers that do not appear to provide commensurate protections to human subjects. If a reasonable balance is struck between protecting human research subjects, minimizing the administrative burden of the system, and engendering public trust, this should maximize beneficence and raise all ships.

Public comment is sought not only on the provisions outlined below, but on whether the proposals strike a reasonable balance among the core

ethical principles. A better balance among the core principles should increase the strength of the partnership between the research enterprise and the public, and even greater scientific understanding and innovation will be fostered.

Finally, it is important to note that, to the extent appropriate, the intent is to eventually amend the other subparts of the HHS human subjects protection regulations in 45 CFR part 46 (subparts B, C, D, and E), and consider the need for updates to FDA regulations and other relevant Federal departmental or agency regulations with overlapping scope.

1. Question for Public Comment

1. Public comment is sought on whether the proposed changes will achieve the objectives of (i) decreasing administrative burden, delay and ambiguity for investigators, institutions, and IRBs, and (ii) strengthening, modernizing, and making the regulations more effective in protecting research subjects.

D. Organization of the NPRM

Section II of the NPRM, which immediately follows, describes in detail the major proposals for revisions to the Common Rule. In general, the changes that are likely to be of greatest significance are discussed in the earlier parts of section II of this preamble. Section II.A is devoted to changes that affect which activities are subject to the Common Rule. Following that section are discussions devoted to changes relating to informed consent (section II.B), changes relating to privacy safeguards for the research use of information and biospecimens (section II.C), and a proposal to encourage greater harmonization of guidance across the agencies that adhere to the Common Rule (section II.D). Discussions of changes relating to how IRBs operate, including a proposal to reduce the number of reviews by different IRBs that take place for multi-site studies, are in the several sections that follow (sections II.E, F and G). The final section (section II.H) collects a variety of other changes, including expanding the scope of the rule to cover clinical trials that are not federally funded but are conducted at institutions that received some federal funding for research with human subjects.

The three sections that follow then discuss various administrative review requirements: Regulatory Impact Analyses (section III), Environmental Impact (section IV), and Paperwork Reduction Act (section V). The final section of the document (section VII) provides the full regulatory text of the proposed changes to the Common Rule. Section VI provides a comprehensive summary of responses received to the 2011 Common Rule ANPRM.

II. Major Proposals To Modernize the Common Rule

A. Proposed Changes to the Scope and Applicability of the Regulations

1. Expanding the Definition of Human Subject to Cover Research with Non-identified Biospecimens (NPRM at §§ ____.102(e) and ____.101(b)(3)(i))

This section focuses on the ethical principles associated with the secondary research use of biospecimens. These biospecimens may have been originally collected from either research or non-research settings (*e.g.,* leftover portion of tissue from a clinical biopsy).

a. NPRM Goals

One of the goals of this NPRM is facilitating cutting edge research in genomics and other 'omics' such as the transcriptome and the microbiome, which generate a wealth of data from biospecimens designed to inform the development of treatments and preventative measures for chronic diseases such as cancer. Facilitating such research, however, requires navigating complex ethical issues. The key question is, under what circumstances should the Common Rule govern what research investigators are able to do with biospecimens that have been collected for some other (*e.g.,* clinical) purpose? (Note that if a researcher interacted with an individual to actually collect a biospecimen for research purposes—for example, obtaining a saliva sample—that ''primary'' research activity is already covered under the current regulations, and is not the focus of the change discussed in this section.) In this case, maximizing the societal value of research would mean reducing barriers to the secondary use of biospecimens to the extent possible.

However, there is a growing recognition that many people want to have some degree of control over the circumstances in which an investigator can derive information about them, above and apart from their interest in whether or not that information might be inappropriately disclosed. More specifically, a growing body of literature shows that in general people prefer to have the opportunity to consent (or refuse to consent) to research involving their own biological materials.[41] Furthermore, in 2012, the Presidential Commission for the Study of Bioethical Issues highlighted the ethical importance of obtaining consent for genomics research and recommended that ''unauthorized whole genome sequencing without the consent of the individual from whom the sample came'' be prohibited.[42] Their rationale for reaching this conclusion was based on concerns relating to privacy as well as autonomy.

In assigning weights to the principles of beneficence and respect for persons in the context of research with biospecimens, strong consideration was given to the fact that failure to acknowledge and give appropriate weight to this distinct autonomy interest in research using biospecimens could, in the end, diminish public support for such research, and ultimately jeopardize our ability to be able to conduct the appropriate amount of future research with biospecimens. To that end, the proposals given below are designed to meet the goals of increasing transparency in when and how biospecimens collected in a variety of circumstances will be used for research purposes and increasing opportunities for consent. Various ways in which these goals might be achieved are the subject of alternative proposals discussed below.

b. Current Rule

The application of the current regulations to secondary research use of a biospecimen is tied to the identifiability of the biospecimen in the hands of the researcher. In particular, the definition of human subject in the current Common Rule at § ____.102(f) states that a human subject is a living individual about whom an investigator (whether professional or student) conducting research obtains data through intervention or interaction with the individual, or identifiable private information. Private information is described as information that is individually identifiable (*i.e.,* the identity of the subject is or may readily be ascertained by the investigator or associated with the information) in order for obtaining the information to constitute research involving human subjects.

Consistent with historical interpretation of identifiable private information under the Common Rule, the terms ''non-identified'' or ''non-identifiable'' are used throughout this

[41] *See supra* notes 5–8.

[42] Presidential Commission for the Study of Bioethical Issues. (2012). Privacy and Progress in Whole Genome Sequencing. Washington, DC: Presidential Commission for the Study of Bioethical Issues. Retrieved from *http://bioethics.gov/sites/default/files/PrivacyProgress508_1.pdf.*

NPRM to signify biospecimens or data that have been stripped of identifiers such that an investigator cannot readily ascertain a human subject's identity. Re-identification of non-identified or non-identifiable biospecimens or information may be possible, depending on the circumstances. The term ''de-identified'' is distinct; it is only used in this proposal to refer specifically to the HIPAA standard of non-identifiability.

Thus, where there is no intervention or interaction with an individual, central to determining whether human subjects are involved in a research activity covered by the current Common Rule is determining the meaning of ''identifiable.'' Under the current Rule, provided the biospecimens and data were collected for purposes other than the currently proposed research, it is permissible for investigators to conduct research on biospecimens and data that have been stripped of all identifiers without obtaining consent because the non-identified biospecimens and data do not meet the regulatory definition of human subject.

It is, however, worth noting that although informed consent is not strictly required by the current regulations when research takes place using non-identified biospecimens, some IRBs have indicated that they are requiring that investigators explicitly obtain consent for future analysis of biospecimens collected in the research setting, and some are refusing to waive consent for use of biospecimens collected in non-research contexts.

c. ANPRM Discussion

The ANPRM asked whether consent should be required before an investigator could conduct research on a non-identified biospecimen. It further asked, if consent were to be required, could such consent be obtained by having a person provide consent for unspecified future research with the biospecimen, instead of requiring that specific consent be obtained each time that the biospecimen would actually be used in a research study.

Although HHS does not consider whole genome analysis to produce identifiable private information unless additional information is available to the investigator that would enable the investigator to ''readily ascertain'' the identity of the individual, it is acknowledged that a time when investigators will be able readily ascertain the identity of individuals from their genetic information may not be far away. The ANPRM suggested that, regardless of what information is removed, it is theoretically possible to extract DNA from a biospecimen itself and potentially link it to otherwise available data to identify individuals. In addition, irrespective of whether biospecimens are considered individually identifiable, the ANPRM sought comment on whether the regulations should be changed to allow human subjects to decide whether their biospecimens would be available for research.

The ANPRM asked whether some types of genomic data should be considered identifiable and, if so, which types (*e.g.,* genome-wide single nucleotide polymorphism [SNP] analyses or whole genome sequences). It also asked whether a human biospecimen should be considered inherently identifiable.

The ANPRM also suggested that the definition of identifiability in the Common Rule be modified to better harmonize it with other regulatory definitions of identifiability within HHS. The ANPRM considered adopting the HIPAA Privacy Rule's standards of what constitutes individually identifiable information, a limited data set, and de-identified information (as defined under HIPAA), in order to address inconsistencies regarding these definitions and concepts between the HIPAA Privacy Rule and the Common Rule.

More specifically, as described above, private information is not considered to be identifiable under the current Rule if the identity of the subject is not or may not be ''readily ascertained'' by the investigator from the information or associated with the information. In contrast, under the HIPAA Privacy Rule, health information is de-identified and thus exempt from that rule only if it neither identifies nor provides a reasonable basis to believe that the information can be used to identify an individual. The HIPAA Privacy Rule provides two ways to de-identify information: (1) A formal determination by a qualified expert that the risk is very small that an individual could be identified; or (2) the removal of all 18 specified identifiers of the individual and of the individual's relatives, household members, and employers, as long as the covered entity has no actual knowledge that the remaining information could be used to identify the individual (45 CFR 164.514(b)).

The HIPAA Privacy Rule addresses some informational risks by imposing restrictions on how individually identifiable health information collected by health plans, health care clearinghouses, and most health care providers (''covered entities'') may be used and disclosed, including for research. In addition, the HIPAA Security Rule (45 CFR parts 160 and, subparts A and C of part 164) requires that these entities implement certain administrative, physical, and technical safeguards to protect this information, when in electronic form, from unauthorized use or disclosure. However, the HIPAA Rules apply only to covered entities (and in certain situations to their business associates), and thus not all investigators are part of a covered entity and required to comply with those rules. Moreover, the HIPAA Rules do not apply specifically to biospecimens in and of themselves.

Public comments in response to the 2011 ANPRM regarding covering all biospecimens raised a series of important concerns. A majority of the commenters opposed the ANPRM's suggested requirement of consent for research use of all biospecimens, regardless of identifiability, particularly if applied to samples collected before the effective date of the regulation. Some commenters cited lack of convincing evidence of harm caused by research use of non-identified clinical biospecimens without consent; they noted that they were not convinced that the principle of autonomy outweighs or trumps the principle of beneficence. They expressed concern that doing so would significantly slow advances in research and human health.

Others acknowledged the erosion of public trust that can result from high-profile disputes involving the use of non-identified biospecimens collected during research.[43] Commenters cited the costs to collect, log, and track consent status of data and biospecimens collected in a clinical setting to ensure that any restrictions on the research use of such resources were honored. However, it is important to note that it appears that many commenters were reacting to concerns that any change in the Common Rule with respect to consent for use of biospecimens would be applied retroactively—that is, to samples already collected.

Some patient advocacy organizations also expressed concerns about the consequences of requiring consent for the use of non-identified biospecimens. Other commenters noted that the recommendation to require consent might inappropriately give greater weight to the Belmont Report's principle of autonomy over the principle of justice, because requiring consent could result in lower participation rates in research by

[43] National Congress of American Indians. Havasupai Tribe and the lawsuit settlement aftermath. Retrieved on November 17, 2014, from *http://genetics.ncai.org/case-study/havasupai-Tribe.cfm.*

minority groups and marginalized members of society. Yet, most of the comments from individual members of the public strongly supported consent requirements for use of their biospecimens, regardless of identifiability.

Many commenters expressed the opinion that the existing regulatory framework is adequate and that current practices should be maintained, stressing that the research use of non-identified data or biospecimens does not involve risk to the research participant. Furthermore, several commenters noted that, although it is theoretically plausible to identify a person based on their biospecimen, the likelihood remains remote enough to argue against the presumption that the sources of all biospecimens are identifiable and cited a study showing that the risk of re-identification from a system intrusion of databases was only 0.22%.[44] In contrast, some commenters supported the idea of requiring consent for research use of all biospecimens, with one commenter noting simply that ''research use of data initially collected for non-research purposes should always require informed consent.''

Several commenters stated that if the Common Rule were modified such that all biospecimens were covered under the rule regardless of identifiability there still might be some activities involving biospecimens that should be considered exempt or excluded from coverage. Suggestions included:

- Identifying markers for cancer prognosis or prediction of response to cancer therapy, or identifying cancer molecular targets (molecular research)
- Basic science research (including analysis of biological processes)
- Research on rare conditions and diseases
- Pediatric research
- Research with samples that lack potentially identifying information, such as serum or plasma not containing DNA
- Biospecimens lacking nucleic acids (such as certain red blood cells, expiratory gases)
- Blood culture bacteria
- Bacterial and viral specimens (this was listed in a comment as a public health issue)
- Protein analysis
- Statistical method development (to the extent that this development is related to biospecimens)
- New molecular methods to detect infectious agents
- Use of specimens to develop and validate new assays for infectious agents
- Archival paraffin blocks

With respect to the 2011 proposal to adopt the HIPAA Privacy Rule's definition of identifiability, a majority of the public commenters strongly opposed the idea. They indicated that the HIPAA Privacy Rule's standard of identifiability would expand what is considered identifiable for purposes of the Common Rule and thus greatly impede relatively low-risk research without adding meaningful protections for human subjects. In particular, they asserted that the HIPAA standards were created to protect against disclosure of health information contained in medical records. As such, commenters argued, they are not appropriate for many types of research that would be covered by the Common Rule (*e.g.,* behavioral and social science research). Others said this would be an extreme change in response to an as yet unidentified or clear problem. Commenters said that the information most at risk for inappropriate disclosure is the type of private health information that is already protected under the HIPAA Rules. Commenters feared that such a change in policy, while ''harmonizing'' the Common Rule to certain HIPAA standards, would create inordinate burdens in terms of new documentation requirements and result in a requirement to apply the HIPAA standards to all types of research, regardless of the level of risk.

d. NPRM Proposal

Regardless of the scale on which harms may have occurred in the past, continuing to allow secondary research with biospecimens collected without consent for research places the publicly-funded research enterprise in an increasingly untenable position because it is not consistent with the majority of the public's wishes, which reflect legitimate autonomy interests. As such, one of the most fundamental changes proposed in this NPRM is to the definition of human subject (proposed § ____.102(e)). The proposal is for the obtaining, use, study, or analysis of biospecimens to be covered under the Common Rule, regardless of identifiability. Covering biospecimens regardless of identifiability avoids codifying any given interpretation of the quickly evolving debates regarding whether certain analytic results (*e.g.,* decoding the whole genome) should be considered to yield identifiable data. (Accompanying this proposal are some minor wording changes to other portions of that definition that are merely intended to clarify how the word ''obtains'' is currently interpreted by OHRP.)

Thus, the focus of this proposal is to require informed consent for research involving biospecimens in all but a limited number of circumstances. The consent would not need to be obtained for *each* specific study using the biospecimen, but could instead be obtained through *broad* consent for future unspecified research (described in more detail in sections II.A.3.d and II.B of this preamble).

An increase in trust and partnership is likely to increase participation rates in research; using individuals' samples and data without permission will hinder true partnership. Better communication and community engagement with patients, particularly in geographic areas and for population subgroups where consent rates are lower than average, should be a priority for the research community.

In response to comments received about the 2011 ANPRM, the NPRM proposes to have the new definition of human subject apply prospectively, that is, it will only apply to research involving biospecimens that will be collected in the future. Additionally, in recognizing that this proposal will have major implications for the operational functioning of the research enterprise, compliance with this provision would be delayed until three years after publication of a final rule.

Also consistent with comments received on the ANPRM, it is proposed that a subset of secondary research on stored biospecimens would be allowed without consent. Specifically, research designed to only generate information about the person that is already known would be considered outside of the scope of the Common Rule. This exclusion would include but not be limited to the development and validation of certain tests and assays (such as research to develop a diagnostic test for a condition using specimens from individuals known to have the condition and those known not to have the condition), quality assurance and control activities, and proficiency testing. This provision would be implemented through a new exclusion from the regulations at § ____.101(b)(3)(i), which has specifically been designed to reflect the underlying ethical principles.

If the research is designed not to generate any new information about the

[44] Kwok P et al. Harder Than You Think: A Case Study of Re-Identification Risk of HIPAA-Compliant Records. NORC at The University of Chicago and Office of the National Coordinator for Health Information Technology. 2011. *http://www.amstat.org/meetings/jsm/2011/onlineprogram/AbstractDetails.cfm?abstractid=302255.*

person, but only confirm something about them that is already known, then the interest in respecting the person's autonomy would appear to be relatively weak. As an example, imagine that a person is known to have a particular genetic disease, and the research involves evaluating a new product that might in a few minutes, at low cost, produce a result showing whether a person has that disease. The person's autonomy interest in whether or not such a study could take place would seem little different from that of anyone in a study that involved secondary use of identifiable information about them.

In addition, the proposal permits IRBs to waive the requirement for informed consent, but the requirements for approval of such waivers would be very strict, and such waivers will only occur in rare circumstances. Note also that the exclusions proposed in §;_____.101(b)(1)(i), (iii)–(vi) would also allow for the use of biospecimens without consent in certain limited circumstances; these additional exclusions are discussed in section II.A.2 of this preamble, below.

This proposal would not modify the Common Rule standard of identifiability (in contrast to what was discussed in the 2011 ANPRM). That is, the standard for determining when an investigator has sufficient information to readily ascertain the identity of an individual is not being changed under this proposal. Thus, coverage of information derived from biospecimens (whether or not the biospecimen was initially collected in the research or non-research context), or indeed any other type of information, would be the same under this proposal as is the case under the current Common Rule.

i. Alternative Proposals

In this section, we discuss two alternative proposals, both of which maintain ''identifiability'' as the lynchpin for determining applicability of the Common Rule to biospecimens. These models increase transparency and opportunities for consent over and above what is provided for in the current Common Rule, but in a smaller set of circumstances than provided for under the primary proposal discussed above.

Alternative Proposal A: Expand the Definition of ''Human Subject'' To Include Whole Genome Sequencing (WGS)

Rather than consider all research using biospecimens as constituting human subjects research, this alternative proposal would expand the definition of human subjects to include only specifically whole genome sequencing data, or any part of the data generated as a consequence of whole genome sequencing, regardless of the individual identifiability of biospecimens used to generate such data. Under this alternative, whole genome sequencing would be considered the sequencing of a human germline or somatic biospecimen with the intent to generate the genome or exome sequence of that biospecimen.

Thus, under this alternative, the regulations would then apply both to research that would generate whole genome sequencing data, the use of any part of the generated data, and to research involving secondary use of any part of whole genome sequencing data that was originally generated for other purposes than the proposed research. Investigators conducting whole genome sequencing research could not avoid the need to comply with the Common Rule by removing identifiers from biospecimens or data, because whole genome sequence data in and of itself would meet the definition of human subject. Under this alternative, a new exemption would also be created that would allow such research to be considered exempt if consent to secondary future research use were obtained in accordance with proposed new requirements at § ____.116(c) and standards were met for protecting information and biospecimens as proposed at § ____.105. A waiver of consent would be permitted, but would be modeled on the more stringent waiver criteria proposed for research involving biospecimens at § ____.116(f)(2).

Explicit consent to conduct research using whole genome sequencing data can be considered ethically important because such data can provide important insights into the health of individuals as well as their relatives. Moreover, whole genome sequence data gathered for one purpose may reveal important information, perhaps unanticipated and unplanned for, years later. Finally, whole genome sequence data are unique for each individual, or at the very least, highly unlikely to be the same as any other individual. Thus, the current allowable practice of removing identifiers from biospecimens and data to conduct whole genome sequencing research without consent might not sufficiently protect both the privacy and autonomy interests of the subject.

As is currently the case, under this alternative, investigators' use of individually identifiable biospecimens, collected for purposes other than the currently proposed research study, would continue to be considered human subjects research. However, the secondary research use of non-identified information or non-identified biospecimens would continue to fall outside of the scope of the Common Rule, with the exception of whole genome sequence data as described above.

One of the less obvious differences in scope between the primary proposal and this Alternative A relates to what research could be done with the data generated from whole genome sequencing that had taken place for clinical purposes. Under the primary proposal, the data produced by such sequencing could continue to be used for research, without additional consent, so long as it did not meet the definition of being identifiable private information. (HHS does not currently consider whole genome sequencing data to meet that definition for purposes of the Common Rule.) Under this Alternative A, consent would be required before using that data for research purposes.

In contrast with the primary proposal in this NPRM, this Alternative Proposal A could be viewed as giving greater weight to the principle of beneficence, while giving less weight to the principle of respecting the autonomy of persons. It would require consent only for the type of studies that many people seem most concerned about (genomic research, including secondary use of genomic information that was produced for clinical purposes). And given that at the moment there is relatively little whole genome sequencing research taking place (in comparison to other types of biospecimen research; see section III.F of this preamble for more information), it would appear to currently impose a somewhat lesser burden in terms of obtaining and tracking consent than the main NPRM proposal.

The major concern with this alternative proposal is that it would codify only a single technology as producing information that would be subject to the Common Rule, necessitating a re-evaluation of the scope of the Rule when technologies now in development to study, for instance, other ''omics,'' become more widespread.

Alternative Proposal B: Classifying Certain Biospecimens Used in Particular Technologies as Meeting the Criteria for ''Human Subject''

This Alternative Proposal B would expand the definition of human subjects to include the research use of information that was produced using a

technology applied to a biospecimen that generates information unique to an individual such that it is foreseeable that, when used in combination with publicly available information, the individual could be identified. Information that met this standard would be referred to as bio-unique information. This proposal is conceptually very similar to Alternative Proposal A. The main difference is that the scope is somewhat broader: Whereas Alternative A requires consent for whole genome sequencing, Alternative B would require consent for genomic sequencing of even small portions of a person's genome, and also require consent for the use of other technologies that might be developed that similarly can generate information unique to a person.

There are three separate conditions that would all need to be met before information would constitute bio-unique information: (1) It would have to have been produced by applying to a biospecimen a technology that is capable of producing information that is unique to an individual; (2) The technology would have to be used to produce enough information such that the information produced is likely to be unique to an individual; and (3) There would need to be publicly available information that, when combined with the information produced by the use of the technology, would create the possibility that some of the individuals whose biospecimens were analyzed using the technologies could be identified.

The major concern with this alternative proposal is that, in order to make such a requirement responsive to scientific and technological developments, HHS would have to continually evaluate new technologies and the nature and amount of information produced using such technologies. Not only would this involve resources and expertise that may not be available to Federal departments and agencies, it would introduce ongoing uncertainty that may actually increase delays in important research.

e. What would change in the definition of ''human subject'' under the primary proposal?

- It is anticipated that the compliance date for the proposed expansion of the definition would be three years after the publication date. The main consequence of this change would be that informed consent (which could be broad, as described in sections II.A.3.d and II.B of this preamble) would generally be required before research use of biospecimens not covered by an exclusion.
- All biospecimens used for research purposes that do not fall under an exclusion (see proposed § ____.101(b)(3)(i), and also § ____.101(b)(1)(i), (iii)–(vi)) and are collected after the compliance date would be subject to the requirements of this rule, regardless of identifiability.

f. Questions for Public Comment

2. Would providing a definition of biospecimen be helpful in implementing this provision? If so, how might the definition draw a line between when a biospecimen is covered by the Common Rule, and when processing of biological materials (*e.g.,* to create a commercial product used for treatment purposes) has sufficiently altered the materials so that they should not be subject to the regulations? Would only covering biospecimens that include nucleic acids draw an appropriate line?

3. To what extent do the issues raised in this discussion suggest the need to be clearer and more direct about the definition of identifiable private information? How useful and appropriate is the current modifier ''may be readily ascertained'' in the context of modern genomic technology, widespread data sharing, and high speed computing? One alternative is to replace the term ''identifiable private information'' with the term used across the Federal Government: Personally identifiable information (PII). The Office of Management and Budget's [45] concept of PII refers to information that can be used to distinguish or trace an individual's identity (such as their name, social security number, biometric records, etc.) alone, or when combined with other personal or identifying information which is linked or linkable to a specific individual, such as date and place of birth, mother's maiden name, etc. It is acknowledged that replacing ''identifiable private information'' with ''PII'' would increase the scope of what is subject to the Common Rule. However, the practical implications of such an expansion, other than the need to ensure that the data are security stored and otherwise protected against disclosure, may be minimal. Public comment is requested on the advantages and disadvantages of such a change.

4. Which of the three proposals regarding the definition of human subject achieves the most reasonable tradeoff between the principles of autonomy (including transparency and level of trust) versus beneficence (as measured by facilitating valuable research)?

5. Public comment is sought regarding any concerns that you have about each of the three proposals, including concerns about implementation or burden to investigators and institutions.

2. Explicit Exclusion of Activities From the Common Rule

The NPRM creates a new section in the regulations referred to as ''exclusions.'' This section outlines eleven specific types of activities that will be outside the scope of the regulations. These activities will therefore not have to satisfy any regulatory requirements, nor is it expected (unlike exempt research) that they will undergo any type of review process to determine this status. The exclusions will eliminate uncertainty regarding some activities that are not research, and identify some activities that arguably might be judged to be research, but whose contribution to public welfare is so imperative that they should proceed without having to satisfy the regulatory requirements. The exclusions also identify certain research activities that are sufficiently low-risk and nonintrusive that the protections provided by the regulations are an unnecessary use of time and resources, whereas the potential benefits of the research are substantial.

The Common Rule has been criticized for not being clear about how to interpret what activities are covered by the policy and for inappropriately being applied to and inhibiting certain activities. The first six exclusion categories are for activities that are deemed not to be research for the purposes of this policy, without needing to consider whether the regulatory definition applies. The definition of research does not provide such a clear and precise way of distinguishing among similar activities that it is immediately obvious which activities fall under the definition and which do not. By creating exclusion categories that are deemed not research, these activities are more clearly distinguished as not having to satisfy the regulatory requirements.

Three of the exclusions seek to eliminate any uncertainty about whether certain internal program improvement activities, historical or journalistic inquiries, or quality assurance or improvement activities satisfy the definition of research. The other three exclusions include some

[45] Executive Office of the President, Office of Management and Budget. (2007). Memorandum for the Heads of Executive Departments and Agencies. Retrieved from The White House: *https://www.whitehouse.gov/sites/default/files/omb/memoranda/fy2007/m07-16.pdf.*

activities that fall into to a gray area that encompasses some activities that arguably might be judged to be research, but that are part of inherently governmental functions that have purposes other than research, such as responsibilities to protect public health and welfare (see exclusions for criminal investigations, public healthy surveillance, and intelligence surveillance). These activities promote recognized specific goods that are crucial to the public welfare, and should be carried out without any hindrances that satisfying regulatory requirements might impose. For these activities, the principles of beneficence and justice outweigh any intrusions on individual autonomy that the regulations might have prevented.

The next four categories of proposed exclusions are for activities that are considered low-risk either in themselves or because there are appropriate safeguards already in place independent of the Common Rule. Here the level of risk, the potential benefits, and the nature of human participation in this research are such that the principle of beneficence determines that the research activities may go forward without the need to impose the protections of the Common Rule.

The last exclusion applies to research involving the secondary use of non-identified biospecimens when the research is limited to generating information about the subject that is already known. As such, this research does not need any additional protections provided by these regulations and the potential benefits of this research justify it under the principle of beneficence. Because this exclusion directly relates to the proposed changes in the definition of ''human subject'' to include all biospecimens, it is discussed above in section II.A.1 of this preamble.

It should be noted that the fact that the NPRM now specifically includes a list of certain excluded activities should not be seen as altering the fact that many other activities that do not meet the criteria for being subject to the Common Rule remain outside the scope of the rule. For example, an activity that does not meet the regulatory definition of research, or does not involve human subjects, would still not be subject to these regulations.

Currently, the Common Rule excludes from coverage (1) activities that do not meet the definition of research (§ ____.102(d) of the current Rule); (2) activities that are not described as research subject to regulation (§ ____.102(e) of the current Rule); and (3) activities that do not involve a human subject (§ ____.102(f) of the current Rule).

The ANPRM asked questions about the definition of research and whether various activities should be excluded from the Common Rule, either by changing the definition of research or by adding exemptions, or both. The ANPRM sought comment on whether and, if so, how, the Common Rule should be changed to clarify whether quality improvement activities, program evaluation studies, or public health activities are covered. It also asked whether there are specific types of studies for which the existing rules are inappropriate. If so, comments were sought on whether this problem should be addressed through modifications to the exemption categories, or by changing the definition of ''research'' used in the Common Rule to exclude some of these studies, or a combination of both.

If the definition of research were to be changed, public comment was sought on how excluded activities should be defined (*e.g.,* ''quality improvement'' or ''program evaluation''). With regard to quality improvement activities, the public was asked to comment on whether it might be useful to adopt the distinction made by the HIPAA Privacy Rule, which distinguishes between ''health care operations'' and ''research'' activities, defining ''health care operations'' to include, among other activities, ''conducting quality assessment and improvement activities, including outcomes evaluation and development of clinical guidelines, provided that the obtaining of generalizable knowledge is not the primary purpose of any studies resulting from such activities.''

a. Exclusion of Activities that are Deemed Not Research (NPRM at § ____.101(b)(1))

The first set of six exclusions involve activities that will be excluded from the regulations because they will be deemed to not involve research. Three of the first six exclusions (discussed in sections II.A.1.a.i, ii, and iv, below) provide clarity regarding the applicability of the Common Rule to activities about which institutions have raised questions in the past as to whether these activities meet the regulatory definition of research. These exclusions aim to reduce the time and effort involved trying to determine whether the regulations apply, and in unnecessary reviews of these activities.

The other three of these exclusions (discussed in sections II.A.1.iii, v, and vi below) apply to activities that are largely inherently government functions that have purposes other than research, and, when conducted by a government employee or contractor, are subject to a variety of other statutes, regulations, and polices that are designed to protect individual privacy and data security, as well as provide notice to those providing the information as to the uses to which the information will be put (see, for example, the Privacy Act of 1974). These activities promote recognized specific goods that are crucial to the public welfare, and because of this they should be carried out without any hindrances that satisfying the Common Rule regulatory requirements might impose. For these activities, the principle of beneficence outweighs any intrusions on individual autonomy that the regulations might have prevented, and this allows these important activities to proceed without delay.

The ANPRM asked whether various activities such as quality improvement, public health activities, or program evaluations studies should be excluded from the rule.

i. Program Improvement Activities (NPRM at § ____.101(b)(1)(i))

(1) NPRM Proposal

The first exclusion, proposed in the NPRM at § ____.101(b)(1)(i), is for data collection and analysis, including the use of biospecimens, for an institution's own internal operational monitoring and program improvement purposes, if the data collection and analysis is limited to the use of data or biospecimens originally collected for any purpose other than the currently proposed activity, or is obtained through oral or written communications with individuals (*e.g.,* surveys or interviews). This category is excluded because these activities are designed for various administrative purposes related to using information to improve the quality of services provided by a specific institution, and are not designed to produce generalizable knowledge. A majority of commenters to the 2011 ANPRM supported excluding program evaluation activities from the scope of the Common Rule. Many of these commenters argued that the public benefits resulting from this type of activity justified its practice, particularly given the generally low-risk involved.

An example of an activity that would satisfy this exclusion is a survey of hospital patients to evaluate and improve the quality of meals delivered to hospital patients. An example of an activity that would not satisfy this exclusion is a prospective observational

study of patient treatments to analyze the comparative effectiveness of two different standard of care treatments frequently used to treat the same medical condition.

(2) Questions for Public Comment

6. Public comment is sought for whether this excluded activity should simply be discussed in the text of the final rule's preamble, and guidance produced to assist investigators in making such a determination, or whether any other similar exclusions should be addressed.

7. Public comment is sought for whether biospecimens should not be included in any of these exclusion categories, and if so, which ones.

ii. Oral History, Journalism, Biography, and Historical Scholarship Activities (NPRM at § ____.101(b)(1)(ii))

(1) ANPRM Discussion

The ANPRM asked whether there were any fields of study (such as classics, history, languages, literature, and journalism) whose usual methods of inquiry were not intended to or should not be covered by the Common Rule.

(2) NPRM Proposal

The second proposed exclusion, in the NPRM at § ____.101(b)(1)(ii) is for oral history, journalism, biography and historical scholarship activities that focus directly on the specific individuals about whom the information is collected.

The overwhelming majority of public comments to the 2011 ANPRM responding to the question about excluding specific fields of study from the regulatory requirements of the Common Rule supported explicitly excluding certain activities from the definition of research versus modifying the exemption categories. The overwhelming majority of these comments focused on oral history. Some of the comments were virtually identical and appear to have been coordinated. Many of the comments reflected the view that the Common Rule was not designed or intended to include oral history activities, and that the ethical codes pertaining to oral history procedures are not consistent with the application of the ethical principles reflected in the Common Rule.

A smaller number of similar comments were submitted with respect to various humanities disciplines and journalism. A significant minority of commenters opposed the exclusion of any fields of study, arguing that the activity itself rather than the academic discipline or training of the investigator should be the basis for the assessment of whether the activity should be excluded. Some of the commenters recommended that the definition of research be focused more explicitly by being limited to ''biomedical and behavioral research,'' in accordance with the statutory provision underlying the Common Rule. A significant number of commenters recommended that guidance should be issued to clarify how the definition of research should be applied, with cases and explanations.

While the NPRM does not propose to modify the definition of ''research'', it does propose to explicitly exclude oral history, journalism, biography, and historical scholarship activities that focus directly on the specific individuals about whom the information or biospecimens is collected. In the kinds of activities referred to here, the ethical requirement is to provide an accurate and evidence-based portrayal of the individuals involved, and not to protect them from public scrutiny. Therefore, the protections afforded to individuals by the Common Rule seem unhelpful in furthering the aforementioned ethical goal in this context. Additionally, these fields of research have their own codes of ethics, according to which, for example, consent is obtained for oral histories. It is believed that because of these reasons, explicit exclusion of these activities from the scope of the Common Rule is appropriate.

iii. Criminal Justice Activities (NPRM at § ____.101(b)(1)(iii))

(1) NPRM Proposal

The third category of activities that the NPRM excludes from the proposed rule encompasses data collection and analysis that enables the uniform delivery of criminal justice. The scope of this exclusion is collection and analysis of data, biospecimens, or records by or for a criminal justice agency for activities authorized by law or court order solely for criminal justice or criminal investigative purposes. The activities excluded are necessary for the operation and implementation of the criminal justice system.

The provision would essentially codify current Federal interpretation that such activities are not deemed to be research under the Common Rule. The addition of this provision is designed to avoid the imposition of disparate requirements by IRBs with overlapping jurisdiction when a data collection or analysis activity encompasses the development of methods required by law or court order for criminal justice or criminal investigative purposes. For example, the Federal Bureau of Investigation (FBI) is charged by law with setting standards governing the collection and processing of DNA biospecimens and information taken (forcibly if necessary) from certain federal and state criminal offenders incident to their arrest or conviction for prescribed offenses under the National DNA Identification Act of 1994 and other acts. Similarly, the FBI is charged by law with setting standards governing the collection and processing of fingerprints and related biographical information taken from federal and state criminal offenders and certain sensitive civil employment applicants. At the same time, through its Laboratory Division and other components the FBI routinely collects human biospecimens at crime scenes from or relating to victims and offenders both known and unknown. Incident to these activities, the FBI is also charged with maintaining, and authenticating through identification processes, the criminal record history information of criminal offenders for the Federal Government and for the overwhelming majority of state governments who elect to participate and share information through those FBI systems.

iv. Quality Assurance and Quality Improvement Activities (NPRM at § ____.101(b)(1)(iv))

(1) NPRM Proposal

The fourth category of excluded activities covers quality assurance or improvement activities involving the implementation of an accepted practice to improve the delivery or quality of care or services (including, but not limited to, education, training, and changing procedures related to care or services) if the purposes are limited to altering the utilization of the accepted practice and collecting data or biospecimens to evaluate the effects on the utilization of the practice. This exclusion does not cover the evaluation of an accepted practice itself.

As an example of an activity that would satisfy this exclusion, assume that there is an accepted practice that is known to reduce the likelihood of an infection after the insertion of a central line. A randomized study in which half the participating institutions would be assigned to have the staff undergo an educational intervention about the need to use that accepted practice, and the other half would not undergo that intervention, would satisfy this exclusion, since it would only be intended to see if the intervention resulted in greater use of the accepted practice. In contrast, imagine a different study that was designed to determine

how well that accepted practice, when it is used, reduces infections. That study would not satisfy this exclusion, since it would be studying the effectiveness of the practice itself, in contrast to studying an effort to increase use of the practice.

Over the past several years, including in response to the 2011 ANPRM, OHRP has received comments from many individuals and organizations expressing concern that some readings of the definition of ''research'' would imply that the regulations apply to quality improvement activities, thereby potentially interfering with the ability of health care and other professionals to enhance the delivery or quality of care or services involving the use of accepted practices. Indeed, a majority of commenters to the 2011 ANPRM supported excluding quality improvement activities from the scope of the Common Rule. These quality improvement activities are in many instances conducted by health care and other organizations under clear legal authority to change internal operating procedures to increase safety or otherwise improve performance, often without the consent of staff or clients, followed by monitoring or evaluation of the effects. These activities are generally conducted in circumstances where independent privacy, confidentiality, and security safeguards are in place, minimizing the chances of harm. These efforts, some of which could be judged to be research, should be carried out because of the recognized public good they achieve. This exclusion is intended to avoid impeding such efforts where the Common Rule's requirements might have a chilling effect on the ability to learn from, and conduct, important types of innovation.

Recognizing that some quality improvement efforts should not be considered to involve research as it is defined in the Common Rule can allay many of these concerns. Thus, this exclusion is being proposed to deal with quality improvement activities that are aimed at implementing practices that are already accepted, with the goal of improving the *delivery* or *quality* of treatments or services. This exclusion would permit measuring and reporting provider performance data for practice management, clinical, or administrative uses. As proposed, this exclusion does not include evaluations of different accepted practices themselves, however, such as activities designed to determine whether a particular accepted medical treatment is or is not more effective than another.

This provision also covers quality improvement activities that are not related to delivery of patient care, but rather involve the delivery or quality of other public benefit or social services. For example, institutions and other entities may provide social services, educational offerings, or other beneficial activities where there is empirical evidence of the value of those efforts, and they may wish to evaluate different ways of enhancing the delivery or quality of those existing services. This exclusion has been written broadly to include such activities.

The rationale for this excluded category is that these activities are designed only to improve the implementation of a practice that is already accepted, not to evaluate the effectiveness and value of the accepted practice itself, and thus would generally be expected to pose little if any risks to the recipients of those practices, and are directly aimed at improving the practical use of those practices. This does not include quality improvement activities designed with a research purpose relating to the safety and efficacy of the accepted practice. It is accordingly important to note that activities that *do* involve such research—for example, assigning patients to different versions of treatments that are within the standard of care in order to evaluate the differences between those treatments in terms of effectiveness or risks—would not come within this exclusion. In the educational context, for example, activities where students are assigned to experimental and control groups to determine the effectiveness of experimental teaching methodologies would also not come within this exclusion. Furthermore, that type of activity would also not meet a separate requirement of this exclusion—that the activity be related to the delivery of (*i.e.,* implementing) an accepted form of care, and not an attempt to evaluate the efficacy or risks of that form of care.

v. Public Health Surveillance (NPRM at § ____.101(b)(1)(v))

(1) NPRM Proposal

The fifth category of excluded activities involves public health surveillance activities, including the collection and testing of biospecimens, conducted, supported, requested, ordered, required, or authorized by a public health authority and limited to those necessary to allow the public health authority to identify, monitor, assess, or investigate potential public health signals or the onset of a disease outbreak, including trends, or signals, and patterns in diseases, or sudden increase in injuries from using a consumer product, or conditions of public health importance, from data, and including those associated with providing timely situational awareness and priority setting during the course of an event or crisis that threatens public health, including natural or man-made disasters. A majority of commenters to the 2011 ANPRM supported excluding public health activities from the scope of the Common Rule.

The rationale for excluding some public health surveillance activities is that when a public health authority conducts public health surveillance activities to fulfill its legal mandate to protect and maintain the health and welfare of the populations it oversees, the regulatory protections of the Common Rule should not impede its ability to accomplish its mandated mission of promoting this recognized public good, in keeping with the principle of beneficence. Other protections independent of the Common Rule exist that serve to protect the rights and welfare of individuals participating in such activities, including privacy, confidentiality and security safeguards for the information collected.

Public health surveillance refers to the collection, analysis, and use of data to target public health prevention. It is the foundation of public health practice. Surveillance uses data from a variety of sources, including mandatory reporting of certain conditions, routine monitoring, vital records, medical billing records, and public health investigations in response to reports of potential outbreaks. The line between public health surveillance and epidemiological research can be difficult to draw, as the same techniques may be used in both. Generally, the difference between the activities is the purpose or context in which the investigation is being conducted and the role of the public health authority.

The following are examples of activities that meet the public health surveillance exclusion:

- Safety and injury surveillance activities designed to enable a public health authority to identify, monitor, assess, and investigate potential safety signals for a specific product or class of products (for example, the surveillance activities of the FDA's Adverse Event Reporting System (AERS), the Vaccine Adverse Event Reporting System (VAERS), Manufacturer and User Facility Device Experience (MAUDE) database, the Medical Product Safety Network (MedSun), and the Sentinel Initiative);
- Surveillance activities designed to enable a public health authority to identify unexpected changes in the

incidence or prevalence of a certain disease in a defined geographic region where specific public health concerns have been raised (*e.g.,* the U.S. influenza surveillance system, which allows CDC to find out when and where influenza activity is occurring, track influenza-related illness, determine what influenza viruses are circulating, detect changes in influenza viruses, and measure the impact influenza is having on hospitalizations and deaths in the United States);

- Surveillance activities designed to enable a public health authority to identify the prevalence of known risk factors associated with a health problem in the context of a domestic or international public health emergency;
- Surveillance activities designed to enable a public health authority to locate the range and source of a disease outbreak or to identify cases of a disease outbreak;
- Surveillance activities designed to enable a public health authority to detect the onset of disease outbreaks or provide timely situational awareness during the course of an event or crisis that threatens the public health, such as a natural or man-made disaster.

On the other hand, subsequent research using information collected during a public health surveillance activity, for instance genetic analysis of biospecimens, would not fall under this exclusion, but would likely be covered under one or more of the other exclusions for low-risk research or exemptions.

Additional examples of activities that would not fall under the exclusion include: Exploratory studies designed to better understand risk factors, including genetic predisposition, for chronic diseases; exploratory studies designed elucidate the relationships between biomarkers of exposure and biomarkers of disease; exploratory studies of potential relationships between behavioral factors (*e.g.,* diet) and indicators of environmental exposures. These types of activities would be considered research, and thus subject to the Common Rule, even if conducted by a Federal agency with a public health mandate. To clarify this proposed exclusion the NPRM also proposes a new regulatory definition of public health authority proposed in § ____.102(k).

(2) Question for Public Comment

8. Public comment is requested on whether the parameters of the exclusions are sufficiently clear to provide the necessary operational guidance, or whether any additional criteria or parameters should be applied to clarify or narrow any of these exclusions.

vi. Intelligence Surveillance Activities (NPRM at § ____.101(b)(1)(vi))

(1) NPRM Proposal

The sixth category of excluded activities that will not be considered research involves surveys, interviews, surveillance activities and related analyses, or the collection and use of biospecimens where these activities are conducted by a defense, national security, or homeland security authority solely for authorized intelligence, homeland security, defense, or other national security purposes.

The rationale for excluding the defense or national security-related activities is similar to that described above regarding public health surveillance activities. The lawful conduct of the departments' and agencies' mandated missions for actively protecting national security, homeland security, and homeland defense are fundamentally not research. These activities may incorporate the collection and analysis of identifiable information, but they are not designed to develop or contribute to generalizable knowledge; rather, they are solely conducted to fulfill a department or agency's legal mandate to ensure the safety and protection of the United States, its people, and its national security interests. This exclusion codifies the current interpretation of the Common Rule. Research conducted or sponsored by Federal departments and agencies using this exclusion will continue to be subject to this regulation.

b. Exclusion of Activities That Are Low-Risk and Already Subject to Independent Controls (NPRM at § ____.101(b)(2))

i. NPRM Goals

The NPRM proposes to exclude four categories of research activities that do not entail physical risk and are non-intrusive, either in themselves or because they are subject to policies that provide oversight independent of the Common Rule. Although the activities are research, they will not be required to receive any form of determination or IRB approval—including expedited review. Additionally, statements of purpose, benefit, and voluntariness as well as consent are not required unless the entity conducting the research, collecting data, or providing data is also subject to separate statutes and regulations requiring such statements. Some of the activities proposed for exclusion are categories that appear as exemptions in the current Rule. It is proposed that the marginal protections provided by the Common Rule are not consistent with the amount of researcher time and institutional resources that they currently draw.

By reclassifying certain research activities from being exempt to being excluded, the proposed rule would eliminate the need for any administrative or IRB review. All investigators performing excluded studies are expected to act in a way that is consistent with the principles outlined in the Belmont Report, even if the Common Rule does not impose requirements on excluded work. For instance, consistent with the spirit of respect for persons, investigators should tell prospective subjects the purpose of the information collection and, where appropriate, that they can choose to participate or not in these activities, although investigators are not explicitly required to do so.

Designating certain research fully outside of the bounds of the Common Rule means that investigators are self-determining whether their own research is covered by the law. As such, the proposal to add these categories is based on the assumption that all investigators will be accurately determining whether their proposed activity is outside the scope of the Common Rule. There is no current proposal outlining how decisions will be made for determining whether a research activity is eligible for exclusion and by whom or how differences among collaborators would be handled. As readers review each of the exclusion categories below, please consider whether the benefits associated with reducing the delay for researchers are countervailed by potential increases in risk of harm.

Throughout this NPRM, the term ''low-risk'' is used to denote research activities that do not entail physical risk, and where both the probability and magnitude of other risks, once required protections are applied, are hypothesized to be low. Public comment is sought on whether there are instances in the regulatory text where the term ''low-risk'' is used, but these conditions do not apply, and whether there is a better way to characterize this category of risk.

ii. ANPRM Discussion

The ANPRM discussed criticisms of the current rule that it does not adequately calibrate the review process to the level of risk of the research, particularly in social and behavioral research. It also discussed whether answering questions should be sufficient indication of willingness to participate in survey or interview

research. It distinguished between informational or psychological risks and physical risks, and raised questions about how effectively IRB review provides protections from informational or psychological risks.

iii. Educational Tests, Survey Procedures, Interview Procedures, or Observation of Public Behaviors (NPRM at § ____.101(b)(2)(i))

(1) NPRM Proposal

The exclusion at § ____.101(b)(2)(i) is for research, not including interventions, that involves the use of educational tests (cognitive, diagnostic, aptitude, achievement), survey procedures, interview procedures, or observation of public behavior (including visual or auditory recording) uninfluenced by the investigators, if at least one of the following is met:

- The information is recorded by the investigator in such a manner that human subjects cannot be identified, directly or through identifiers linked to the subjects; or
- Any disclosure of the human subjects' responses outside the research would not reasonably place the subjects at risk of criminal or civil liability or be damaging to the subjects' financial standing, employability, educational advancement, or reputation; or
- The research will involve a collection of information subject to the Paperwork Reduction Act of 1995, 44 U.S.C. 3501 *et seq.,* research information will be maintained on information technology that is subject to and in compliance with section 208(b) of the E-Government Act of 2002, 44 U.S.C. 3501 note, and all of the information collected, used, or generated as part of the research will be maintained in a system or systems of records subject to the Privacy Act of 1974, 5 U.S.C. 552a.

The exclusion does not include research activities in which any sort of intervention is used, in addition to the specified methods of information collection. Also, the term ''survey'' as used here refers to information collected about individuals via questionnaire or similar procedures (*e.g.,* the Current Population Survey conducted by the Census). ''Human subjects'' do not include organizations or businesses. ''Survey,'' as used here, does not include the collection of biospecimens or other types of information collection that might involve invasive procedures. Thus, a survey that included information collections in addition to verbal or written responses, including the collection of a biospecimen or the use of some other physically invasive procedures (*e.g.,* a diagnostic test and blood spot or buccal swab) could not use this exclusion.

This exclusion includes the research activities in current exemption category 2 in the (current Common Rule at § ____.101(b)(2)), and some additional government information collection research activities using the same methods. As in the current exemption category 2, this proposed exclusion includes research studies whose methods consist of the use of educational tests, survey procedures or interview procedures, or observation of public behavior uninfluenced by the investigators, if the data are recorded anonymously, or the information is recorded with identifiers, but is not sensitive such that its disclosure could result in harm to the subjects. The exclusion provides a list of the specific harms that must be considered, which is the same as in the current exemption category, with the addition of the specific harm of being damaging to the subjects' educational advancement. This potential harm has been added because of the obvious relevance to the effects of the disclosure of responses in research involving educational tests.

This proposed exclusion does not include the first element in the current exemption category at § ____.101(b)(3)(i), which is the element pertaining to research involving the use of educational tests, survey procedures, interview procedures, or observation of public behavior if the human subjects are elected or appointed public officials or candidates for public office. The rationale for this change in the proposed NPRM is that it does not seem appropriate to single out this category of subjects for different treatment in this way.

The third element of this proposed exclusion covers research activities using the same methods identified above even when the data are recorded with identifiers and the information recorded may be personally sensitive or private but not explicitly damaging to an individual, if the research is subject to specified federal statutes and regulations that require data security and subject privacy protections. Under this proposal, the preponderance of research conducted by Federal employees and contractors that collects information exclusively through educational tests, questionnaires, or observations of behavior would no longer be subject to the Common Rule because most such collections would be subject to the Paperwork Reduction Act of 1995, would be maintained on information technology that is subject to and in compliance with section 208(b) of the E-Government Act of 2002, and all of the information collected, used, or generated as part of the research would be maintained in a system or systems of records subject to the Privacy Act of 1974. Furthermore, consistent with these laws, OMB's Standard 2.2 in its ''Standards and Guidelines for Statistical Surveys'' [46] identifies the required notifications to potential survey respondents.

Specifically, Standard 2.2 states that Federal agencies must ensure that each information collection instrument clearly states the reasons the information is planned to be collected; the way such information is planned to be used to further the proper performance of the functions of the agency; whether responses to the collection of information are voluntary or mandatory (citing authority); the nature and extent of confidentiality to be provided, if any (citing authority); an estimate of the average respondent burden together with a request that the public direct to the agency any comments concerning the accuracy of this burden estimate and any suggestions for reducing this burden; the OMB control number; and a statement that an agency may not conduct and a person is not required to respond to an information collection request unless it displays a currently valid OMB control number. These policies are rooted in the Fair Information Practice Principles that cover the following concepts: Individual participation, transparency, authority, purpose specification and use limitation, minimization, access and amendment, redress, quality and integrity, security, training, integration, and accountability. It is proposed that the information risk protections afforded by these laws and their implementing regulations are generally stronger than the privacy protections that result from IRB review, and would result in affording more uniform protections to participants.

The rationale for excluding these research activities from the Common Rule, even when the research is not otherwise subject to additional federal controls, is that consent is inherent to participation and that the risks most likely to be experienced by subjects are related to disclosure of anonymous, non-sensitive information and are thus categorized as ''low.'' Said another way, all individuals, including vulnerable populations, would understand that actively providing response to

[46] Executive Office of the President, OMB. (Sept. 2006). Standards and Guidelines for Statistical Surveys. Retrieved from The White House: *https://www.whitehouse.gov/sites/default/files/omb/inforeg/statpolicy/standards_stat_surveys.pdf.*

educational tests, surveys, or interview procedures constitutes consent to participate and that the risk associated with such participation would be related to disclosure of the information they provided. The exclusion of this type of activity rests in large part on the idea that all individuals, regardless of the setting or context in which the activity will take place, are generally familiar with common forms of educational tests, survey and interview procedures which they experience in their daily lives, and do not need additional measures to protect themselves and their privacy from investigators who seek their involvement in research activities involving these procedures.

This exclusion is based on the assumption that the activities covered by this category are largely informational, and thus the most important role that an IRB might play with respect to reducing potential harms is to ensure data security and privacy protections. Under this assumption, the proposed exclusion is consistent with the principle of respect for persons and the preservation of autonomy. In the case of observation of public behavior, even if the subject does not know that an investigator is watching his or her actions, the subject's behavior is public and could be observed by others and thus the research observation is not inappropriately intrusive. However, there are situations in which this assumption would not always hold. For instance, administration of a questionnaire or participation in a focus group on a sensitive topic may induce significant stress in some individuals, or individuals approached about taking a survey may feel compelled to participate. Whether and how the exclusion should be bounded so that the final rule achieves a balance among the principles of beneficence, autonomy, and justice is the subject of the request for comment on this proposed exclusion.

In addition, this exclusion is in keeping with one of the goals of this NPRM, namely to reduce burden on research that includes sufficient protections to research subjects. By proposing that this exclusion could be satisfied if the information to be collected is subject to the Paperwork Reduction Act of 1995, would be maintained on information technology that is subject to and in compliance with section 208(b) of the E-Government Act of 2002, and all of the information collected, used, or generated as part of the research would be maintained in a system or systems of records subject to the Privacy Act of 1974, the NPRM notes that the privacy protections afforded by these laws are generally comparable, if not stronger, than the privacy protections that result from IRB review.

(2) Questions for Public Comment

9. Public comment is requested on the extent to which covering any of these activities under the Common Rule would substantially add to the protections provided to human research subjects.

10. Public comment is sought on whether this exclusion should only apply to research activities in which notice is given to prospective subjects or their legally authorized representatives as a regulatory requirement. If so, please comment on what kind of information should be included in the notice such as the research purpose, privacy safeguards, contact information, ability to opt-out, etc. Would requiring notice as a condition of this exempt research strike a good balance between autonomy and beneficence?

11. Public comment is sought regarding whether it is reasonable to rely on investigators to make self-determinations for the types of research activities covered in this particular exclusion category. If so, should documentation of any kind be generated and retained?

12. Public comment is sought regarding whether some or all of these activities should be exemptions rather than exclusions.

13. Public comment is sought regarding whether these exclusions should be narrowed such that studies with the potential for psychological risk are not included. Are there certain topic areas of sensitive information that should not be covered by this exclusion? If so, please provide exemplary language to characterize such topic areas in a manner that would provide clarity for implementing the Rule.

14. For activities captured under the third element of this exclusion, do the statutory, regulatory, and other policy requirements cited provide enough oversight and protection that being subject to expedited review under the Common Rule would produce minimal additional subject protections? If so, should the exclusion be broadened to also cover secondary analysis of information collected pursuant to such activities?

15. Public comment is requested on the extent to which excluding any of these research activities from the Common Rule could result an actual or perceived reduction or alteration of existing rights or protections provided to human research subjects. Are there any risks to scientific integrity or public trust that may result from excluding these research activities from the Common Rule?

iv. Research Involving the Collection or Study of Information that has been or will be Collected (NPRM at § ____.101(b)(2)(ii))

(1) Current Rule

This exclusion appears in the current Common Rule as exemption category 4 (current Rule at § ____.101(b)(4)). This exemption currently applies to research involving the use of existing data, documents, records, and pathological or diagnostic specimens, but only if the sources are publicly available or if the information is recorded by investigators in such a manner that subjects cannot be identified, directly or through identifiers linked to them.

(2) ANPRM Discussion

The ANPRM proposed retaining this exemption as an exemption (not an exclusion). The ANPRM asked questions about whether the current limitations specified in exempt category 4 (research involving the use of existing information or biospecimens, § ____.101(b)(4) in the current Rule) should be eliminated. Specifically, the ANPRM suggested that the category would be revised to eliminate the word ''existing.'' With this elimination, the exemption would be broadened to cover the use of information or biospecimens that were or will be collected for purposes other than the suggested research, rather than requiring that all of the information or biospecimens already exist at the time the study is suggested for exemption.

(3) NPRM Proposal

The second category of low-risk research activities excluded from the proposed rule is a revised version of the current Rule's exemption category 4 (current Rule at § ____.101(b)(4)). The NPRM proposal is that the excluded category at § ____.101(b)(2)(ii) includes research involving the collection or study of information that has been or will be acquired solely for non-research activities or was acquired for research studies other than the proposed research study when the sources are publicly available, or the information is recorded by the investigator in such a manner that human subjects cannot be identified, directly or through identifiers linked to the subjects, the investigator does not contact the subjects, and the investigator will not re-identify subjects or otherwise conduct an analysis that could lead to

creating individually identifiable private information.

In light of the proposed expansion of the rule to cover certain biospecimens regardless of identifiability, this category has been modified such that it does not include secondary research use of biospecimens. Many of the comments supported the discussion in the ANPRM of eliminating the requirement that the information be ''existing'' at the time the study was suggested for exemption. Thus, in addition to changing this category of activities from being exempted to being excluded, the proposed exclusion does not require that the data exist as of the time that the study commences, but rather is expanded to include the secondary research use of data collected in the future for research or non-research purposes. The underlying logic behind the exclusion in proposed § ____.101(b)(2)(ii) is that such research involves no direct interaction or intervention with human subjects, and any research use of the information does not impose any additional personal or informational risk to the subjects, because (1) the information is already available to the public, and so any risk it may include exists already, or (2) the information recorded by the investigator cannot be identified, and no connection to or involvement of the subjects is contemplated. Any requirements of the Common Rule would not provide additional protections to subjects, and could add substantial administrative burden on IRBs, institutions, and investigators. Creating this excluded category avoids that problem.

(4) Questions for Public Comment

16. Public comment is sought regarding whether it is reasonable to rely on investigators to make self-determinations for the types of research activities covered in this particular exclusion category. If so, should documentation of any kind be generated and retained?

17. Public comment is requested on the extent to which covering any of these activities under the Common Rule would substantially add to the protections provided to human research subjects. Is there a way in which this exclusion should be narrowed? Public comment is also sought regarding whether activities described here should appear as an exclusion or as an exemption.

v. Research Conducted by a Government Agency using Government-Generated or Government-Collected Data (NPRM at § ____.101(b)(2)(iii))

(1) NPRM Proposal

The third category of low-risk research activities excluded from the proposed rule at § ____.101(b)(2)(iii) is research conducted by a federal department or agency using government-generated or government-collected information obtained for non-research purposes (including criminal history data), if the information originally involved a collection of information subject to the Paperwork Reduction Act of 1995, 44 U.S.C. 3501 *et seq.,* the information is maintained on information technology that is subject to and in compliance with section 208(b) of the E-Government Act of 2002, 44 U.S.C. 3501 note, and all of the information collected, used, or generated as part of the research is maintained in a system or systems of records subject to the Privacy Act of 1974, 5 U.S.C. 552a. This proposed exclusion is consistent with the Federal Government's emphasis on minimizing the burden on the public and maximizing the value of the information collected by the Federal Government, while protecting participant privacy and data security.[47] This exclusion is proposed for situations in which both the original data collection and the subsequent (secondary) analysis are subject to data security, participant privacy, and notice requirements associated with the named federal statutes and regulations. As such, it does not seem that the delay imposed by obtaining a determination as ''exempt'' or ''expedited'' is likely to increase the protections provided to those who have already provided the government with information for other purposes. Public comment is requested on the extent to which covering any these activities under the Common Rule would substantially add to the protections provided to human research subjects.

(2) Questions for Public Comment

18. Public comment is sought on whether this or a separate exclusion should also include research involving information collected for non-research purposes by non-federal entities where there are comparable privacy safeguards established by state laws and regulations, or whether such non-federally conducted research would be covered by the proposed exemption at § ____.104(e)(2).

19. Public comment is requested on the extent to which covering any of these activities under the Common Rule would substantially add to the protections provided to human research subjects.

20. Public comment is sought regarding whether it is reasonable to rely on investigators to make self-determinations for the types of research activities covered in this particular exclusion category. If so, should documentation of any kind be generated and retained?

21. Public comment is sought regarding whether some or all of these activities should be exemptions rather than exclusions.

vi. Certain Activities Covered by HIPAA (NPRM at § ____.101(b)(2)(iv))

(1) ANPRM Discussion

The public was asked to comment on whether it might be useful to adopt the distinction made by the HIPAA Privacy Rule, which distinguishes between ''health care operations'' and ''research'' activities, defining ''health care operations'' to include, among other activities, ''conducting quality assessment and improvement activities, including outcomes evaluation and development of clinical guidelines, provided that the obtaining of generalizable knowledge is not the primary purpose of any studies resulting from such activities.'' The public was asked to comment about this specifically in the context of quality improvement activities.

(2) NPRM Proposal

The fourth category of low-risk research activities excluded from the proposed rule, found at § ____.101(b)(2)(iv), covers activities that are regulated under the HIPAA Privacy Rule (*i.e.*, covered entities). These are activities whose risks relate only to privacy and confidentiality, and are already subject to independent controls provided by HIPAA. Specifically, it is proposed that research, as it is defined in this proposed rule, that involves the use of protected health information by a HIPAA covered entity for ''health care operations,'' ''public health activities,'' or ''research,'' as those three terms are defined under the HIPAA Rules, would

[47] United States Office of Management and Budget, February 14, 2014, Memorandum to Heads of Executive Departments and Agencies; *Guidance for Providing and Using Administrative Data for Statistical Purposes https://www.whitehouse.gov/sites/default/files/omb/memoranda/2014/m-14-06.pdf.* This guidance builds on three previously issued OMB memoranda designed to increase the value of existing data: *Sharing Data While Protecting Privacy* (M–11–02 of November 3, 2010), *Open Data Policy-Managing Information as an Asset* (M–13–13 of May 9, 2013), and *Next Steps in the Evidence and Innovation Agenda* (M–13–17 of July 26, 2013).

be excluded from the Common Rule. This proposed exclusion would not apply if the investigator that receives and uses individually identifiable health information for a research study was not covered by the HIPAA Rules, even if the entity disclosing the individually identifiable health information to the investigator was covered by the HIPAA Rules. The exclusion is limited in this way to ensure that it only applies to research studies and information that are already subject to independent privacy, confidentiality, and security protections.

A majority of comments on the 2011 ANPRM favored distinguishing between research and health care operations, as such terms are defined in the HIPAA Privacy Rule and the Health Information Technology for Economic and Clinical Health (HITECH) Act, and excluding the latter from the policy. Some commenters noted that people involved in these various activities are protected in other ways, and alluded to the sorts of measures that provide protection. Others suggested that any exclusions should be limited to data collection and analysis activities, or to activities below a certain threshold of risk (*i.e.,* minimal risk). A minority of comments objected to these exclusions, arguing that these activities represent encroachments on their individual rights and privacy, and that oversight in accordance with the Common Rule requirements would be more protective. The proposed exclusion excludes only certain activities that involve data collection and analysis, where privacy safeguards are in place.

(3) Questions for Public Comment

22. Public comment is requested on whether the protections provided by the HIPAA Rules for identifiable health information used for health care operations, public health activities, and research activities are sufficient to protect human subjects involved in such activities, and whether the current process of seeking IRB approval meaningfully adds to the protection of human subjects involved in such research studies.

23. Public comment is sought regarding to what extent the HIPAA Rules and HITECH adequately address the beneficence, autonomy, and justice aspects for the collection of new information (versus information collected or generated in the course of clinical practice, *e.g.*, examination, treatment, and prevention). Should this exclusion be limited to data collected or generated in the course of clinical practice? If additional data collection is allowable, should it be limited to what is on the proposed Secretary's list of minimal risk activities (discussed in more detail below in II.F.2 of this preamble)?

24. Public comment is requested on whether additional or fewer activities regulated under the HIPAA Privacy Rule should be included in this exclusion.

c. Applicability of Exclusions to the Subparts

i. Current Rule

The current Common Rule does not contain exclusion categories, though as discussed above, some of the proposed exclusions are similar to activities that are exempt under the current regulations, which therefore might provide a basis for comparison.

All of the current exemption categories can be applied to research that is subject to subpart B. None of the current exemption categories can be applied to research that is subject to subpart C.

The exemptions in the current Rule generally apply to subpart D. However, the exemption at § ____.101(b)(2), for research involving educational tests, survey or interview procedures, or observation of public behavior does not apply to subpart D except for research involving educational tests or observations of public behavior when the investigators do not participate in the activities being observed.

ii. NPRM Proposals

Language specifying the application of the exclusions to the subparts can be found in the NPRM at § ____.101(b)(2) and (3).

It is proposed that all of the exclusion categories in § ____.101(b)(2) and (3) apply to research that is subject to subpart B, and therefore the requirements imposed by subpart B would not need to be met.

It is similarly proposed that all of the exclusion categories in § ____.101(b)(2) and (3) apply to research involving prisoners, therefore the requirements of subpart C would not need to be met. This would narrow the scope of research currently requiring subpart C review and certification to OHRP. Considerations in favor of this conclusion include the preponderance of low-risk socio-behavioral research designed to improve prisoner welfare, including studies that focus on substance abuse treatment, community reintegration, and services utilization; the occurrence of prisoner-subjects in research not targeting prisoner populations; the occurrence of prisoner-subjects in databases or registries; and the broad regulatory interpretation of the subpart C ''prisoner'' definition. Public comment is requested on whether the application of these exclusions to research involving prisoners is appropriate and acceptable.

It is proposed that all of the exclusion categories in § ____.101(b)(2) apply to research subject to subpart D, with the exception that the exclusion proposed under § ____.101(b)(2)(i) would only apply to research involving educational tests or observations of public behavior when the investigator does not participate in the activities being observed. This limitation would maintain the protection currently provided by the similar application of the current exemption § ____.101(b)(2) to research involving children, and would continue to require IRB review under the Common Rule and additional IRB review under subpart D of 45 CFR part 46 when the research involves surveys or interview procedures with children or observation of public behavior when the investigator participates in the activities being observed.

iii. Questions for Public Comment

25. Should research involving prisoners be allowed to use any or all of the exclusions found at § ____.101(b)(2) and (3), as currently proposed?

26. Are there certain provisions within the broader categories proposed at § ____.101(b)(2) and (3) to which the subparts should or should not apply?

3. Proposed Exemptions (NPRM at § ____.104)

The Common Rule has been criticized for inadequately calibrating the review process to the risk of research. Some have argued that, particularly given the paucity of information suggesting significant risks to subjects in certain types of survey and interview-based research, the current system overregulates such research. Further, many critics see little evidence that most IRB review of social and behavioral research effectively protects subjects from psychological or informational risks. Overregulating social and behavioral research in general may serve to distract attention from identification of social and behavioral research studies that do pose ethical challenges and thus merit significant oversight.

The proposed exemption categories and attendant policies and procedures related to exemptions appear in the NPRM at § ____.104, and are guided by the following policy goals:

• To create procedural efficiencies for IRBs, administrators and investigators in making and receiving exemption determinations, thereby reducing the overall IRB workload and the wait time for investigators to begin their work.

• To ensure that reasonable safeguards are in place for certain lower risk research activities not fully excluded under the current Common Rule by requiring that research in certain exemption categories follow elements of the proposed rule, but not be required to undergo full IRB review according to the full set of criteria at § ____.111(a)(1)–(8) and other regulatory requirements of the Common Rule .

Note that all of the exemption categories in the current Rule have been carried over to the proposed Rule in one or another form. In particular, some of the current Rule's exemptions have now become exclusions under the NPRM (and thus subject to no administrative or IRB review), while some remain in the NPRM's exempt categories section.

Under the current Common Rule, research may qualify for exemption from the regulatory policy if it falls into one of the six current categories at § ____.101(b)(1)–(6). Such studies are fully exempt from the regulations. The current regulations do not specify who at an institution may determine that research is exempt under § ____.101(b). However, in the past OHRP has recommended that because of the potential for conflict of interest, investigators not be given the authority to make an independent determination that human subjects research is exempt. OHRP has recommended that institutions should implement exemption policies that most effectively address the local setting and programs of research. OHRP has recognized that this may result in a variety of configurations of exemption authority, any of which are acceptable assuming compliance with applicable regulations.

The NPRM proposes to retain the term ''exempt,'' (rather than ''excused,'' as suggested in the ANPRM) but require that exempt research comply with certain provisions of the proposed rule such as proposed privacy safeguards at § ____.105 (discussed below). This policy retains and, in important respects (through a new safe harbor provision), expands the current flexibility of institutions to develop a system in which someone at the institution—including the investigator, unless prohibited by law—uses an exemption decision tool to make the exemption determination.

It is important to recognize that while in some cases there are new requirements that have been imposed on the exemption categories that do not exist in the current version of the exemption categories, this usually does not actually represent a tightening of the rules for those exemptions. To the contrary, these changes are generally being made to allow the exemption in question to be expanded to cover activities that are not currently exempt. For example, adherence to new privacy standards is a new requirement in order for certain surveys to be exempt, but these are surveys that under the current Common Rule would require IRB review.

The proposed eight exemptions are divided into three groupings according to the kind of risk characteristically involved and what protections are called for: (1) Low-risk interventions that do not require application of standards for information and biospecimen protection; (2) research that may involve sensitive information that requires application of standards for information and biospecimen protection described in proposed § ____.105; and (3) secondary research involving biospecimens and identifiable private information that requires application of privacy safeguards discussed at proposed § ____.105, broad consent as discussed in proposed § ____.116(c), and limited IRB review as discussed in proposed § ____.111(a)(9).

a. Making Exempt Research Determinations (NPRM at § ____.104(c))

i. NPRM Goal

The goal of this NPRM proposal is to create procedures for appropriate exemption determinations in a manner that does not waste time and effort.

ii. Current Rule

In developing policies and procedures addressing the exemptions, OHRP currently recommends that when an exemption determination is made, the specific exemption category or categories should be included in the record of the material supplied to the IRB and this information should be available for oversight purposes. In addition, OHRP guidance has said that institutional policies and procedures should identify clearly who is responsible for making exemption decisions. OHRP notes that under current policy a Common Rule Department or Agency retains final authority as to whether a particular human subjects research study conducted or supported by that Department or Agency is exempt from the Common Rule (§ ____.101(c)) and that authority continues under the proposed regulations.

iii. ANPRM Discussion

The ANPRM discussed a mechanism to (1) register exempt research, and (2) audit a small but appropriate portion of such research, which would still be subject to other regulatory protections such as the suggested data security and information protection standards and certain consent requirements.

The ANPRM discussed a tracking mechanism to enable institutions to assure that such research meets the criteria for inclusion in the suggested ''excused'' categories. The original recommendations would require investigators to register their study with an institutional office by completing a brief form, thus eliminating the current practice of not allowing investigators to begin conducting such studies until a reviewer had determined it meets the criteria for excused research. This would make the institution aware of key information about the research (such as the purpose of the research and the name of the study's principal investigator), without also requiring that the activity undergo a review that, if not done in a timely manner, could slow the research without adding any significant protection to subjects. In addition, the institution could choose to review some of the submissions at the time they are filed and, if deemed appropriate, require that the study be sent for expedited review or, in rare cases, convened IRB review. It would be made clear that the regulations would not require, and in fact, would discourage, having each of these registration forms undergo a comprehensive administrative or IRB review prior to commencing the study or even afterward.

The auditing requirement was intended to encourage institutions to use the regulatory flexibility suggested for the exempt categories of research. The auditing requirement would have provided institutions with information needed to assess their compliance with the new ''excused'' categories without unnecessarily subjecting all such research to either prospective review, or even routine review sometime after the study is begun. Note that currently, OHRP recommends that there be some type of review by someone other than the investigator to confirm that a study qualifies as exempt, and many institutions do impose such a requirement even though such a requirement is extra-regulatory.[48]

[48] Office for Human Research Protections. (2011, January 20). Exempt Research Determination FAQs. Retrieved from Frequently Asked Questions About Human Research: *http://www.hhs.gov/ohrp/policy/faq/index.html.*

The ANPRM also asked whether it was acceptable for investigators to independently determine whether their research was exempt, whether review of all registrations should be required, and whether there should be a time limitation or waiting period before excused research could begin.

The ANPRM also asked whether it was appropriate to require institutions holding a Federalwide assurance (FWA) to conduct retrospective audits of a percentage of the excused studies to make sure they qualify for inclusion in an excused category, and if so, how such audits should be conducted.

iv. NPRM Proposal

The NPRM proposes to adopt an exemption determination documentation requirement which is somewhat different from the registration system suggested in the 2011 ANPRM. To assist investigators and institutions in making a timely and accurate determination of exemption status the NPRM at § ____.104(c) states that federal departments or agencies will develop one or more exemption determination tools. Federal departments or agencies may create their own tool, or rely on a tool created by another department or agency (including the web-based tool created by HHS). The tool, which has not yet been developed, will be designed in such a way that if the person using the tool inputs accurate information about the study, the tool will produce an outcome which is the determination as to whether the study is exempt or not. Institutions may rely on use of the federally developed tool by investigators as a ''safe harbor'' for this determination: So long as the information that was provided to the tool was accurate, result of the application of the tool will be presumed by the federal departments or agencies to be an appropriate determination of exempt status. Use of the tool will be voluntary; each institution and agency would determine whether to rely on the decision tool for their determinations, and if so, who would be allowed to operate it. Institutions, if they so choose, could continue to have such determinations made by an individual who is knowledgeable about the exemption categories and who has access to sufficient information to make an informed and reasonable determination. In general, it is expected that investigators would not be allowed to make exemption determinations for themselves without the use of the decision tool, due to considerations of a conflict of interest. It should also be noted that for FDA-regulated device studies IRB review is required by statute.

The NPRM also proposes that the institution or IRB be required to maintain records of exemption determinations, which records must include, at a minimum, the name of the research study, the name of the investigator, and the exemption category applied to the research study. Maintenance of the output of the completed decision tool would fulfill this recordkeeping requirement.

In general, commenters to the 2011 ANPRM were not necessarily opposed to the concept of registration but sought further information on what this process would entail. Public commenters also expressed concerns about allowing an investigator to independently make the determination that his or her research is exempt. Other commenters suggested that this practice would be acceptable for some investigators, whose research is well known to IRB members, and is clearly within an exempt category. The ANPRM noted concerns that some exempt research was unnecessarily delayed by requirements of some institutions to review the research to make an exemption decision.

Several institutions reported that they already as a matter of policy require investigators to submit exempt studies to the IRB, not necessarily for full board review, but to ensure that the exempt determination is valid. These decisions typically are made by the IRB administrator and never involve full review unless there is concern about the exemption status. Thus, they felt the registration requirement was unnecessary and would add new administrative burdens for research already considered low-risk.

Other commenters, such as investigators conducting research currently considered exempt, were strongly opposed to a registration requirement because it would add a new burden to conducting less than minimal risk and exempt research. In addition, commenters raised concerns about the administrative burden and need for a retrospective audit system of registered research.

This NPRM proposal is anticipated to provide more flexibility than the registration requirement originally proposed, while helping to ensure that correct determinations of exempt status are made. The existence of a ''safe harbor'' mechanism will hopefully encourage institutions to create policies that allow investigators to use the tool, and thus to be able to more quickly commence their research without needing additional administrative or IRB reviews for these types of studies. Other people at the institution who have access to accurate information about a proposed study may also utilize the tool, which will also allow research to go forward unimpeded.

In addition, it is proposed that a change to § ____.109(a) be made to clarify that the Common Rule does not give IRBs the authority to review or approve, require modification in or disapprove research that qualifies for exemption under § ____.104(d), (e), or (f)(2).

There is no auditing requirement in this NPRM proposal. Consequently, it does not address concerns raised at the ANPRM stage regarding potential conflict of interest if the investigator is providing the information to operate the decision tool. Public comment is sought on this idea regarding the operational details for further development of this proposal. Depending upon the comments received on this proposal, additional operational details regarding the proposed federally sponsored decision tool would be developed and subject to public comment. It should also be noted that the lack of an auditing requirement would not prohibit an institution from performing post-approval monitoring of exemption determinations according to the institution's standard operating procedure.

v. Questions for Public Comment

27. Public comment is sought regarding how likely it would be that institutions would allow an investigator to independently make an exempt determination for his or her own research without additional review by an individual who is not involved in the research and immersed in human research protection *e.g.,* a member of the IRB Staff.

28. Public comment is sought regarding whether an investigator would be able to contrive his or her responses to the automated exemption decision tool in order to receive a desired result *i.e.,* an exempt determination, even if it does not accurately reflect the research activities.

29. Public comment is sought on whether it would be more appropriate for some of the exempt categories than others to rely on the exemption determination produced by the decision tool where investigators themselves input the data into the tool, or whether there should be further administrative review in such circumstances.

30. Public comment is sought regarding whether relying on the exemption determination produced by the decision tool where investigators themselves input the data into the tool

as proposed would reduce public trust in research.

31. Public comment is sought regarding how likely it would be that institutions would rely on such a decision tool to provide a safe harbor for an investigator making a determination that the proposed research qualifies for an exemption, or whether developing such a tool would not be worthwhile, and whether institutions would be able to adequately manage exemption determinations without the use of the decision tool.

32. Public comment is sought regarding what additional information should be required to be kept as a record other than the information submitted into the decision tool, for example, a study abstract, the privacy safeguards to be employed, or any notice or consent document that will be provided.

33. Public comment is sought regarding the value of adding an auditing requirement.

b. Exemptions Subject to the Documentation Requirements of § ____.104(c) and No Other Section of the Proposed Rule

Four exemptions are proposed that will not be subject to any additional requirements apart from the need to keep a record of the determination that the study was exempt. Three of these four exemptions in proposed § ____.104(d) are versions of exemptions found in the current rule. A revised version of exemption category 1 in the current Common Rule (research conducted in established or commonly accepted educational settings) is found at proposed § ____.104(d)(1) in the NPRM. A revised version of the current exemption category 5 (research and demonstration projects) is found at proposed § ____.104(d)(2). Exemption category 6 in the current Common Rule (taste and food quality evaluations) is found in the NPRM at § ____.104(d)(4), and is unchanged.

i. Research Conducted in Established or Commonly Accepted Educational Settings (NPRM at § ____.104(d)(1); Current Rule at § ____.101(b)(1))

(1) NPRM Goal

The goal is to retain an exemption for a considerable portion of education research, but to provide for review if the research might adversely affect students' opportunity to learn required educational content, or the assessment of educators.

(2) Current Rule

The current exemption category 1 (§ ____.101(b)(1) in the current Rule) is for research conducted in established or commonly accepted educational settings, involving normal educational practices, such as (i) research on regular and special education instructional strategies, or (ii) research on the effectiveness of or the comparison among instructional techniques, curricula, or classroom management methods.

(3) NPRM Proposal

The first exemption category is for research conducted in established or commonly accepted educational settings when it specifically involves normal educational practices. This includes most research on regular and special education instructional strategies, and research on the effectiveness of, or the comparison among, instructional techniques, curricula, or classroom management methods, so long as the research is not likely to adversely impact students' opportunity to learn required educational content in that educational setting or the assessment of educators who provide instruction.

This exemption category is a revised version of the first exemption category in the current Common Rule. The rationale for the revision is that there are concerns about whether the conduct of some research projects of this type might draw sufficient time and attention away from the delivery of the regular educational curriculum, and thereby have a detrimental effect on student achievement. The current education system places a strong emphasis on student performance on tests in core curriculum areas such as reading, science, and mathematics, which have a significant effect on such things as grade promotion and student assignment to different courses, and cumulatively influence student attainment and achievement. It could also have a negative effect on teachers being evaluated on the basis of student performance. The exemption category is designed to not include such research projects. Otherwise, the exemption is retained in order to allow for the conduct of education research that may contribute to the important public good of improving education, consistent with the principle of beneficence.

(4) Questions for Public Comment

34. Public comment is sought on whether this exemption category should only apply to research activities in which notice that the information collected will be used for research purposes is given to prospective subjects or their legally authorized representatives as a regulatory requirement, when not already required under the Privacy Act of 1974. If so, comment is sought on what kind of information should be included in the notice, such as the research purpose, privacy safeguards, contact information, etc. Comment is also sought on how such a notice should be delivered, *e.g.,* publication in a newspaper or posting in a public place such as the school where the research is taking place, or by individual email or postal delivery. Note that other requirements, such as those of the Family Educational Rights and Privacy Act (FERPA) or the Protection of Pupil Rights Amendment, may also apply. Would requiring notice as a condition of this exempt research strike a good balance between autonomy and beneficence?

35. Public comment is sought on whether the privacy safeguards of § ____.105 should apply to the research included in § ____.104(d)(1), given that such research may involve risk of disclosure of identifiable private information.

ii. Research and Demonstration Projects Conducted or Supported by a Federal Department or Agency (NPRM at § ____.104(d)(2); Current Rule at § ____.101(b)(5))

(1) NPRM Goal

The NPRM exemption proposed at § ____.104(d)(2) is for research and demonstration projects involving public benefit or service programs, and is a slightly revised version of exemption 5 in the current Common Rule.

The proposed regulatory revision and change in interpretation of the exemption is designed to clarify the scope of the exemption so that more research studies would be exempt. It is believed that these changes would make the exemptions easier to apply. It is also designed to allow the Federal Government to carry out important evaluations of its public benefit and service programs to ensure that those programs are cost effective and deliver social goods, consistent with the principle of beneficence.

(2) Current Rule

The current version of this exemption category was originally created based on the recognition that alternative processes are in place in which ethical issues raised by research in public benefit or service programs are be addressed by the officials who are familiar with the programs and responsible for their successful operation under state and federal laws. These alternative processes implicitly consider risk, but there is not a predefined scope for the likelihood or

magnitude of risk in these research activities. In fact, the Secretary of HHS noted in 1983 that these demonstration and service projects are already subject to procedures which provide for extensive review by high level officials in various program administration offices. The Secretary further noted that review by an IRB would be duplicative and burdensome to state and local agencies and to other entities participating in demonstration projects. It was thought that removal of this unnecessary layer of review would not only reduce the cost of the projects but also help avoid unnecessary delays in project implementation.[49]

OHRP has interpreted the current exemption category 5 (§ ____.101(b)(5) in the current Common Rule) to apply only to those research and demonstration projects designed to study a ''public benefit or service program'' that a Common Rule department or agency itself administers, and for which the public benefit or service program exists independent of any research initiative. As an example, OHRP has in the past said that a research study to evaluate a Centers for Medicare & Medicaid Services (CMS)-administered demonstration project comparing two different mechanisms for reimbursing providers under Medicare or Medicaid would meet this exemption. However, this exemption would not apply to some types of research, for example, the evaluation of clinical trials (*e.g.,* a National of Institutes of Health-funded clinical trial comparing two treatment regimens for heart disease), even if such studies would inform Medicare reimbursement policies.

(3) ANPRM Discussion

The ANPRM asked several questions about the interpretation and applicability of current exemption category 5 (current Common Rule at § ____.101(b)(5)), including the scope of the current interpretation of the category 5 exemption. The ANPRM also asked if the current category 5 guidance entitled, ''OPRR Guidance on 45 CFR 46.101(b)(5),'' [50] should be revised, or if additional guidance on the interpretation of exemption category 5 is needed.

More specifically, the ANPRM asked whether this exemption should be revised to assure that it is not misinterpreted or misapplied, whether broadening it would result in inappropriately increasing risks to subjects, how such risks might be mitigated, and whether OHRP guidance should be revised.

(4) NPRM Proposal

The second proposed exemption category (NPRM at § ____.104(d)(2)) is for research and demonstration projects that are conducted or supported by a Federal department or agency, or otherwise subject to the approval of department or agency heads, and that are designed to study, evaluate, or otherwise examine public benefit or service programs, including procedures for obtaining benefits or services under those programs, possible changes in or alternatives to those programs or procedures, or possible changes in methods or levels of payment for benefits or services under those programs.

It is proposed that each federal department or agency conducting or supporting the research and demonstration projects would be required to establish, on a publicly accessible federal Web site or in such other manner as the department or agency head may prescribe, a list of the research and demonstration projects that the Federal department or agency conducts or supports under this provision. The research or demonstration project would be required to be published on this list prior to or upon commencement of the research. Agencies and departments would be able to create or use their own Web sites for this purpose, or use a Web site created by OHRP. Note that for studies exempted pursuant to § ____.104(d)(2), the recordkeeping requirement at proposed § ____.104(c) would be deemed to be satisfied by the published list required under proposed § ____.104(d)(2)(i).

There were few responses to the questions posed on this exemption in the 2011 ANPRM. However, those that did comment noted that this category is often misunderstood by IRBs and, at best, would benefit from clearer guidance. Commenters said that examples would help investigators and IRBs understand when research activities included in demonstration projects constitute human subjects research subject to the Common Rule. Commenters noted that many activities in demonstration projects do not contribute to generalizable knowledge as they produce results that are relevant only to the program being assessed; as such, many of these activities do not meet the Common Rule's regulatory definition of ''research'' and thus fall outside of the rule. Other commenters said that some activities in this category are mandated or required by law or regulation and should not be considered to be under the purview of the Common Rule. It was noted that the critical issue in these studies should be protecting privacy and as long as measures are in place to do so, additional protections are not required.

The revision of the language in this exemption clarifies the original language to say that a federally conducted project examining any aspect of a public benefit or service program would qualify for the exemption. The clauses concerning procedures for obtaining benefits, other changes in programs and procedures, and changes in methods or levels of payment are merely examples of such projects, and are not considered to be all-inclusive.

In addition, OHRP proposes to clarify its interpretation of public benefit and service programs which are being evaluated as part of the research to include public benefit or service programs that a Common Rule department or agency does not itself administer through its own employees or agents, but rather funds (*i.e.,* supports) through a grant or contract program. Therefore, the exemption would be clarified to apply to research and demonstration projects supported through federal grants or cooperative agreements, for example. These activities include appropriate privacy, confidentiality and security safeguards for any biospecimen and information used in this research. For example, information collected in some demonstration projects are subject to the protections of the HIPAA rules, and Federal agencies include conditions in grants or cooperative agreements which require the recipient to protect the confidentiality of all project-related information that includes personally identifying information.

It is believed that these changes would make the exemptions easier to apply. It is also designed to allow the Federal Government to carry out important evaluations of its public benefit and service programs to ensure that those programs are cost effective and deliver social goods. The proposed changes to this exemption would require OHRP to revise its existing guidance document on this exemption accordingly.

These changes would bring the language into conformance with other provisions of the rule that refer to research ''conducted or supported'' by Federal agencies. Both current practice and the edited language cover such

[49] 48 FR 9266 (Mar. 4, 1983).

[50] *See* 48 FR 9266–9270 (Mar 4, 1983). (OPRR Guidance on 45 CFR 46.101(b)(5), Exemption for Research and Demonstration Projects on Public Benefit and Service Programs, *http://www.hhs.gov/ohrp/policy/exmpt-pb.html*).

research, whether it is conducted directly by federal staff or through a contract, cooperative agreement, or grant. These methods of administration are, of course, always subject to department or agency head approval, directly or by delegation. In addition, some of these research and demonstration projects are conducted through waivers, interagency agreements, or other methods that also require agency head approval. Accordingly, both the previous and the revised language allow for the full panoply of methods by which research and demonstration projects on public benefit or service programs can be carried out.

Although research such as that described above is exempt, an additional requirement is proposed. In the interest of transparency, each Federal department or agency conducting or supporting the research and demonstration projects must establish, on a publicly accessible federal Web site or in such other manner as the Secretary may prescribe, a list of the research and demonstration projects which the federal department or agency conducts or supports under this provision. The research or demonstration project must be published on this list prior to or upon commencement of the research. The agency determines what will be included on this list and maintains its oversight. Agencies that already publish research and demonstration projects on a publicly accessible Web site could satisfy this proposed requirement if the existing Web site were to include a statement indicating which of the studies were determined to meet this exemption. The goal of this proposed requirement is to promote transparency of federally conducted or supported activities affecting the public that are not subject to oversight under the Common Rule. It should not create any delay to the research. HHS will develop a resource that all Common Rule agencies may use to satisfy the requirement at proposed § ____.104(d)(2)(i). Alternatively, an agency can make its own Web site.

Currently, there is no such comprehensive listing of studies that have been determined to have met this exemption, so this requirement would also enable Common Rule departments and agencies to better assess the types of projects that use this exemption, and consider whether any changes to its scope would be appropriate.

(5) Questions for Public Comment

36. Public comment is sought on whether this exemption category should only apply to research activities in which notice is given to prospective subjects or their legally authorized representatives as a regulatory requirement. If so, comment is sought on what kind of information should be included in the notice, *e.g.,* the research purpose, privacy safeguards, or contact information. Also comment on how such a notice should be delivered; *e.g.,* publication in a newspaper or posting in a public place, or by individual email or postal delivery. Would requiring notice as a condition of this exempt research strike a good balance between autonomy and beneficence? In many cases, it may be that individual notice or consent to all potentially affected persons before the research or demonstration commences is ordinarily impossible in the conduct of such studies. For example, if a research or demonstration project will affect all inhabitants of a large geographic area (*e.g.,* a housing, a police patrol, a traffic control, or emergency response experiment), or all clients or employees of a particular program or organization or setting will be subject to a new procedure being tested (*e.g.* a new approach to improving student performance, a new anti-smoking or anti-obesity program, a new method for evaluating employee performance), would it be possible to make participation voluntary for all affected individuals, or even to identify and inform all affected individuals in advance?

37. Public comment is sought on whether this exemption category is appropriate based on the recognition that alternative processes are in place in which ethical issues raised by research in public benefit or service programs would be addressed by the officials who are familiar with the programs and responsible for their successful operation under state and federal laws, rather than meeting specific risk-based criteria, or whether risk limitations should be included, and if so, what those limitations should be. Though long-standing, this exemption has never identified specific risk-based criteria, or risk limitations to bound the type of projects that may be covered. When originally promulgated, the exemption did stipulate that following the review of such projects, if the Secretary determines that the research or demonstration project presents a danger to the physical, mental, or emotional well-being of a participant or subject, then written informed consent would be required. Public comment is sought on whether to limit the risk that can be imposed on subjects while using this exemption, and if so, how to characterize those limits in a clear fashion. If more than minimal risk interventions are included, public comment is sought on whether, for transparency, this should be made clear in the regulatory text.

With regard to the issue of risks encountered by participants in such research or demonstration projects, comments are also sought regarding the argument that any and every demonstration project involving changes in public benefit or service programs (*e.g.,* water or sewage treatment programs or pollution control programs, programs involving educational procedures, or programs involving emergency procedures related to extreme weather events, etc.) exposes those affected to possible risks of some kind. In this regard, those risks are ordinarily and perhaps always no different in kind or magnitude than those involved in simply making the change in procedures without using research tools to evaluate them. For example, health care providers could be required to perform certain sanitation reforms to prevent patient infections whether or not such reforms were first tested in practice through a research or demonstration project. It is common for all Federal departments and agencies that regulate private or public organizations to impose conditions of participation in public programs providing for safety, program integrity, financial reporting, etc. Public comment is sought regarding whether there should be conditions (*e.g.,* an individual notice or consent requirement) imposed on such research or demonstration projects involving public benefit or service programs which might lead to significant impediments or limitations on testing and evaluation before or after being imposed program-wide. Would the effect of imposing expensive or impracticable conditions on public benefits or services evaluations be to reduce the number of such evaluations and consequently to expose program participants to increased risk through exposure to untested reforms?

38. Public comment is sought on whether the existing privacy safeguards for such activities, including the Privacy Act, HIPAA rules, and other federal or state privacy safeguards provide sufficient independent controls, or whether other safeguards such as the privacy safeguards of § ____.105 should be applied.

iii. Research involving benign interventions in conjunction with the collection of data from an adult subject (NPRM at § ____.104(d)(3))

(1) NPRM Goal

The goal of this proposed new exemption for studies that involve benign interventions is to eliminate IRB review of these low-risk studies to reduce time and effort, allow IRBs to focus more attention on research with higher risks or presenting other ethical challenges, and to enable this research to go forward.

(2) Current Rule

Currently, research studies in the social and behavioral sciences that do not qualify for exemption category 2 (current Common Rule at § ____.101(b)(2)), but that involve certain types of well-understood interactions with subjects (*e.g.,* asking someone to watch a video and then conducting word association tests), require either convened board or expedited IRB review.

(3) ANPRM Discussion

The ANPRM considered whether to include on the list of exempt studies certain types of social and behavioral research conducted with competent adults that would involve specified types of benign interventions commonly used in social and behavioral research, that are known to involve virtually no risk to subjects, and for which prior review does little to increase protections to subjects. These would be methodologies that are familiar to people in everyday life and in which verbal or similar responses would constitute the research data being collected. The ANPRM asked whether this category should include research in which there is deception.

(4) NPRM Proposal

The proposed exemption at § ____.104(d)(3) is new and includes research involving benign interventions in conjunction with the collection of data from an adult subject through verbal or written responses (including data entry) or video recording if the subject prospectively agrees to the intervention and data collection and at least one of the following is met:

- The information obtained is recorded in such a manner that human subjects cannot be identified directly or through identifiers linked to the subjects; or
- Any disclosure of the human subjects' responses outside the research would not reasonably place the subjects at risk of criminal or civil liability or be damaging to the subjects' financial standing, employability, educational advancement, or reputation.

For the purpose of this proposed provision, benign interventions would be brief in duration, harmless, painless, not physically invasive, not likely to have a significant adverse lasting impact on the subjects, and it would be required that the investigator has no reason to think the subjects will find the interventions offensive or embarrassing. If these criteria were met, such benign interventions might include research activities in which a subject is asked to read materials, review pictures or videos, play online games, solve puzzles, or perform cognitive tasks. If the research involves deceiving the subjects regarding the nature or purposes of the research, this exemption would not be applicable unless the subject authorizes the deception. For the purpose of this proposed provision, authorized deception would be prospective agreement by the subject to participate in research where the subject is informed that he or she will be unaware of or misled regarding the nature or purposes of the research.

Many commenters to the 2011 ANPRM supported adding another exemption category of research for certain types of social and behavioral activities, conducted with competent adults, that would involve specified types of benign interventions beyond educational tests, surveys, focus groups, interviews, and similar procedures that are commonly used in social and behavioral research, that are known to involve virtually no risk to subjects, and for which IRB review does little to increase protections for subjects. However, many commenters were opposed to the requirement that subjects be ''competent adults'' in order for the expanded exemption to apply, asking whether tests of competency would be required for such research to proceed.

This new exemption category addresses research involving benign interventions, in which information is collected through verbal or written responses and recorded in a manner such that human subjects cannot be identified, or where the disclosure of responses would not place the subjects at risk of criminal or civil liability or be damaging to the subjects' financial standing, employability, educational advancement, or reputation. Here, a ''benign intervention'' is categorized as one that is temporary and painless, producing no lasting negative impacts. Examples of benign interventions might include research activities in which a subject is asked to read materials, review pictures or videos, play online games, solve puzzles, or perform cognitive tasks, so long as the interventions meet the requirements for this category.

The NPRM proposes to allow this type of research to occur without the requirements of informed consent or data security protections because neither the intervention nor the identifiability of the information is likely to result in harm to the subject, and the subject must prospectively agree to the intervention and the data collection. This exemption would include some research using authorized deception, where there is a prospective agreement by the research subject to participate in the activity after being informed that he or she will be unaware or misled regarding the nature of the research (§ ____.104(d)(3)(iii)–(iv)). Subjects must be adults, but the provision does not specify that they must be competent, and so tests of competency are not necessary; however, the presumption is that in keeping with the principle of respect for persons, these subjects will not be taken advantage of. This new exemption category is being added because respect for persons is accomplished through the prospective subject's prospective agreement or authorization, the research activities pose little risk to subjects, and the use of this exemption for many social or behavioral studies will enable IRBs to devote more time and attention to research studies involving greater risks or ethical challenges.

(5) Questions for Public Comment

39. Public comment is sought on whether this exemption category should only apply to research activities in which notice is given to prospective subjects or their legally authorized representatives as a regulatory requirement. If so, comment is sought on what kind of information should be included in the notice, such as the research purpose (if authorized deception is not utilized), privacy safeguards, contact information, etc. Would requiring notice as a condition of this exempt research strike a good balance between autonomy and beneficence?

40. Public comment is sought regarding what improvements could be made to the language describing the type of interventions in this exemption category so as to make clear what interventions would or would not satisfy this exemption category.

41. Public comment is sought on whether it is reasonable, for purposes of this exemption, to rely on the exemption determination produced by the decision tool where investigators

themselves input the data into the tool, or whether there should be further administrative review in such circumstances.

iv. Taste and Food Quality Evaluation and Consumer Acceptance Studies (NPRM at § ____.104(d)(4); current Rule at § ____.101(b)(6))

The exemption proposed in § ____.104(d)(4) is found in the current Common Rule at § ____.101(b)(6). This exemption is for taste and food quality evaluation and consumer acceptance studies if wholesome foods without additives are consumed, or if a food is consumed that contains a food ingredient at or below the level and for a use found to be safe, or agricultural chemical or environmental contaminant at or below the level found to be safe, by FDA or approved by the EPA or the Food Safety and Inspection Service of the U.S. Department of Agriculture.

This exemption is retained unchanged from the current Common Rule. The research activities included under this intervention are relatively benign, no sensitive information is collected, and presumably subjects are made aware of the nature of the activity before they participate, and may exercise their autonomy in choosing whether or not to participate. However, since the research activities involve physical interventions with the subject, the rules relating to exemption determinations and the record-keeping requirement for exempt activities are appropriate.

(1) Question for Public Comment

42. Public comment is sought on whether this exemption category should be narrowed to apply only to research activities in which notice is given to prospective subjects or their legally authorized representatives as a regulatory requirement. If so, comment is sought on what kind of information should be included in the notice such as the research purpose, privacy safeguards, contact information, etc. Would requiring notice as a condition of this exempt research strike a good balance between autonomy and beneficence? Should prospective subjects be given the explicit opportunity to opt out of such research?

c. Exemptions Subject to the Documentation Requirements of § ____.104(c) and the Privacy Safeguards Described in § ____.105

Two exemption categories are proposed which will be subject to the documentation requirement and the new privacy safeguards. The first exemption category is for certain research involving educational tests, surveys, interviews, or observation of public behavior. The second category is for secondary research use of identifiable private information originally collected for non-research purposes where notice was given.

One of the functions of IRB review when a study presents only informational risks is to ensure the sufficiency of the investigator's plan for protecting any identifiable private information that will be collected, created, or used as part of the study. In keeping with one of the goals of this NPRM and as discussed in section II.A.3 of this preamble, to reduce burden associated with research that includes sufficient protections to research subjects, this NPRM proposes to eliminate the need for IRB review for studies involving the collection of identifiable private information when collected through educational tests (cognitive, diagnostic, aptitude, achievement), survey procedures, interview procedures, or observation of public behavior (including visual or auditory recording), or in studies involving only the secondary analysis of identifiable private information originally collected for non-research purposes when the proposed privacy safeguards at § ____.105 are met. The newly proposed § ____.105 offers three avenues to meeting the data security and privacy protection requirements, all three of which are posited to be at least as protective as those usually that result from IRB review.

- The investigator is required by law to comply with, or voluntarily complies with, the HIPAA Rules;
- The activity is conducted by federal departments and agencies, and the activity is or will be maintained on information technology that is subject to and in compliance with section 208(b) of the E-Government Act of 2002, 44 U.S.C. 3501 note, if all of the information collected, used, or generated as part of the activity will be maintained in systems of records subject to the Privacy Act of 1974, 5 U.S.C. 552a, and the research will involve a collection of information subject to the Paperwork Reduction Act of 1995, 44 U.S.C. 3501 *et seq.;* or
- The investigator complies with the privacy safeguards promulgated by the Secretary of HHS (which standards will be designed so that they could be readily implemented by an individual investigator, and would involve minimal cost and effort to implement).

It is believed that the protections afforded by the Paperwork Reduction Act, section 208 of the E-Government Act, and the Privacy Act in combination with each other are generally equivalent to the privacy protections that result from IRB review. It is similarly believed that the privacy protections afforded by HIPAA in the context of the studies exempted under § ____.104(e) justify eliminating IRB review.

The proposed section 105 also includes limitations on the use, release, and disclosure of the identifiable private information collected or maintained for research subject to this Rule.

Although most if not all of these requirements are already in effect for federal entities and HIPAA covered entities, they will likely be new to some institutions and their investigators. The intent is that Secretary would develop a list of ''reasonable and appropriate safeguards'' that would be easily implemented by investigators. As such, it is envisioned that the Secretary's privacy safeguards described in proposed § ____.105 would be designed as a checklist that could be easily monitored by investigators and IRB members alike. In the case where IRB members have additional expertise, they may choose to deviate from the Secretary's list. Acknowledging that it is difficult for the public to fully comment on the implications of such a checklist before it has been developed; the Rule includes a requirement that the Secretary solicit public comment on the proposed minimum safeguards.

i. Questions for Public Comment

43. Public comment is sought on the concept of requiring such minimum safeguards and limitations on disclosure, as well as whether the requirements of the proposed § ____.105 would constitute a broadening of IRB responsibilities rather than a streamlining of the implementation of responsibilities that many IRBs already adopted. If an institution does view this as an inordinate broadening of responsibilities, does the institution currently have in place alternative mechanisms for ensuring data security and participant privacy in a research context? Suggestions for alternative approaches to meeting public expectation that federally sponsored research safeguard their data and protect privacy are sought during this public comment period.

44. Public comment is sought regarding whether the proposed Rule's information security requirements for biological specimens and identifiable private information are highly technical and require a level of expertise not currently available to most IRBs. Do these security requirements unrealistically expand IRB responsibilities beyond current competencies?

ii. Research Involving Educational Tests, Surveys, Interviews, or Observation of Public Behavior if the Information is Recorded with Identifiers and even if the Information is Sensitive (NPRM at § ____.104(e)(1))

(1) NPRM Goals

The goal of the proposed exemption at § ____.104(e)(1) is to eliminate the need for IRB review of certain low-risk studies that involve collecting information by means of educational tests, surveys, interviews, or observation of public behavior. The intent is that this change would reduce IRB and investigator time and effort in reviewing and submitting protocols, and would allow IRBs to focus more attention on research with higher risks or presenting other ethical challenges, would respect autonomy, and would enable this research to go forward.

(2) Current Rule

The current Common Rule only allows these activities, involving the recording of identifiable information about research subjects, to be exempt if the disclosure of the identifiable information outside the research could not reasonably place the subjects at risk of criminal or civil liability or be damaging to the subjects' financial standing, employability, or reputation.

(3) ANPRM Discussion

The ANPRM discussed criticisms of the current Common Rule that it does not adequately calibrate the review process to the level of risk of the research, particularly in social and behavioral research. It also discussed whether answering questions should be sufficient indication of willingness to participate in survey or interview research. It distinguished between informational or psychological risks and physical risks, and raised questions about how effectively IRB review provides protections from informational or psychological risks.

Specifically, the ANPRM discussed expanding the current exemption category 2 (current Rule at § ____.101(b)(2)) to include all studies involving educational tests, surveys, interviews, and similar procedures, so long as the subjects are competent adults, without any further qualifications (but subject to the data security and information protection standards).

(4) NPRM Proposal

The exemption proposed in § ____.104(e)(1) covers research, not including interventions, involving the use of educational tests (cognitive, diagnostic, aptitude, achievement), survey procedures, interview procedures or observation of public behavior (including visual or auditory recording), if the information obtained is recorded in such a manner that human subjects can be identified directly or through identifiers linked to the subjects. The research in this category is exempt from most requirements of the NPRM, but investigators must adhere to the privacy safeguards outlined in proposed § ____.105. Note that the language used in this exemption is very similar to that used in the current exemption 2, proposed exclusion § ____.101(b)(2)(i), and the proposed exemption at § ____.104(d)(3); unlike the language in those three places, however, the proposed exemption at § ____.104(e)(1) would allow for research to be exempt where sensitive identifiable private information is collected the release of which could pose some measure of risk. However, the exemption is subject to adherence to the proposed § ____.105 privacy safeguards, which are designed to limit the chances that the release of that information would lead to harm. This exemption category includes research involving test development, and use of tests that have not already been shown to be valid or reliable, inasmuch as such research activity is desirable in order to determine the their validity and reliability, and the exemption category provides safeguards to ensure that results will not be used to evaluate student achievement. Note that the activities that are currently exempted under exemption category 2 (involving similar ways to collect information, but only where either the identity of the subject is not recorded or disclosure of the information would not have any adverse consequences to the subject) would be moved under the NPRM to the proposed exclusion at § ____.101(b)(2)(i), rather than being under an exemption. That proposed exclusion is discussed in section II.A.2 of this preamble. Note also that this proposed exemption would cover the research activities under the exemption in the current Rule at § ____.101(b)(3)(ii), such as the research activities funded subject to the Department of Justice statute related to certificates of confidentiality (42 U.S.C. 3789g) and the information collections subject to the confidentiality provisions of the Education Sciences Reform Act (20 U.S.C. 9573) of the Department of Education. Presumably the safeguards provided by these statutes satisfy the privacy safeguards of the proposed § ____.105.

Consistent with the spirit of the principle of respect for persons, investigators should provide prospective subjects with sufficient information to make an informed decision about participation. Public comment is sought regarding whether some kind of notice must be given as a regulatory requirement for this exemption, and if so, what kind of information must be included in that notice.

The rationale for characterizing these activities as low-risk is that prospective subjects can decline to participate or answer specific questions in procedures they are already familiar with from the experiences of daily life, and, importantly, that the information will be protected through the new privacy safeguards of § ____.105. The availability of this exemption is designed to reduce the volume of information collection that IRBs process, thereby enabling them to devote more time and attention to research studies which pose greater risks or involve ethical challenges.

The underlying assumptions and rationale for this exemption mirror the rationale for the exclusion proposed in § ____.101(b)(2)(i)(C). Here again it is presumed that the subjects are sufficiently familiar with survey and interview procedures and educational tests to be able to knowingly and willingly provide the information, or decline to participate. The rationale for this exemption category is that prospective subjects can decline to participate or answer specific questions in procedures they are already familiar with from the experiences of daily life, and that the information collected will be protected through the privacy safeguards of § ____.105.

However, there are situations in which these assumptions would not always hold. For instance, administration of a questionnaire or participation in a focus group on a sensitive topic may induce significant stress in some individuals, or individuals approached about taking a survey may feel compelled to participate. Whether and how this exemption should be bounded so that the final rule archives a balance among the principles of beneficence, autonomy, and justice is the subject of a request for public comment on this proposed exemption. The use of this exemption is designed to enable IRBs to devote more time and attention to research studies which pose greater risks or involve more challenging ethical concerns.

(5) Questions for Public Comment

45. Public comment is sought on whether the proposed exemption regarding the use of educational tests, survey procedures, interview procedures, or observation of public behavior (§ ____.104(e)(1)) should be applied to research involving the use of educational tests with children and whether it should also be applied to research involving the use of survey or interview procedures with children. If so, for research involving children, should the permissible survey or interview topics be limited in some way?

46. Public comment is sought on whether this exemption category should only apply to research activities in which notice is given to prospective subjects or their legally authorized representatives as a regulatory requirement. If so, comment is sought on what kind of information should be included in the notice such as the research purpose, privacy safeguards, contact information, etc. Would requiring notice as a condition of this exempt research strike a good balance between autonomy and beneficence? Should prospective subjects be given the explicit opportunity to opt out of such research?

47. Public comment is sought on whether it is reasonable, for purposes of this exemption, to rely on the exemption determinations produced by the decision tool where investigators themselves input the data into the tool, or whether there should be further administrative review in such circumstances?

48. Public comment is sought on whether this exemption category should be narrowed such that studies with the potential for psychological risk are not included. Are there certain topic areas of sensitive information that should not be covered by this exemption? If so, please provide exemplary language to characterize such topic areas in a manner that would provide clarity for implementing the Rule.

iii. Secondary Research Use of Identifiable Private Information (NPRM at § ____.104(e)(2))

(1) NPRM Goal

The goal of the proposed new exemption category at § ____.104(e)(2) is to facilitate secondary research using identifiable private information that has been or will be collected or generated for non-research purposes, when prior notice has been given and privacy safeguards and prohibitions on re-use of the information are in place. Technological developments and the creation of large databases have significantly increased the potential benefits of secondary research analyses. The proposed exemption category would eliminate the need for IRB review of certain low-risk studies that only involve secondary use of identifiable private information that was collected for non-research purposes. The information would be protected under the privacy safeguards of § ____.105, and respect for persons would be demonstrated through a requirement for notice. The proposed exemption is limited to the research use of the identifiable private information for the purposes of the specific research for which the investigator or recipient entity requested access to the information, not for any further secondary research use. This proposed exemption is intended to reduce IRB and investigator time and effort, and allow IRBs to focus more attention on research with higher risks or presenting other ethical challenges. The exemption would enable beneficial secondary research to occur without being impeded by administrative or IRB review, but with privacy safeguards to avoid harm and a notice requirement to show respect for persons. Public comment is sought regarding this proposal, including what limits in scope it should have, what controls and protections should be attached above and beyond the privacy safeguards of § ____.105, and how best to respect the autonomy or other interests of the individuals who are the subjects of the information.

(2) Current Rule

Under the current Common Rule, secondary research studies using identifiable private information undergo IRB review and approval, often using the expedited review procedure. If the activity satisfies the relevant criteria, the IRB may waive the requirement for informed consent, which IRBs typically do.

(3) ANPRM Discussion

The ANPRM proposed that with regard to an investigator's use of pre-existing data (*i.e.,* data that were previously collected for purposes other than the currently proposed research study) originally collected for non-research purposes, then, as is currently the rule, written consent or waiver of consent would only be required if the investigator obtains information that identifies the subjects. Under the ANPRM, there would accordingly have been no change in the current ability of investigators to conduct such research using de-identified data or a limited data set, as such terms are used in the HIPAA Rules, without obtaining consent.

Second, the ANPRM proposed that if the data were originally collected for research purposes, then consent would be required regardless of whether the investigator obtains identifiers. This would have been a change with regard to the current interpretation of the Common Rule in the case where the investigator does not obtain any identifiers. That is, the allowable current practice of telling the subjects, during the initial research consent, that the information they are providing will be used for one purpose, and then after stripping identifiers, allowing it to be used for a new purpose to which the subjects never consented, would not have been allowed.

(4) NPRM Proposal

The NPRM proposal here is for a new exemption covering the secondary research use of identifiable private information that has been or will be acquired for non-research purposes, if the following are met:

- Prior notice has been given to the individuals to whom the identifiable private information pertains that such information may be used in research;
- The privacy safeguards of § ____.105 are required; and
- The identifiable private information is used only for purposes of the specific research for which the investigator or recipient entity requested access to the information.

Under the current system, IRBs frequently waive consent for research involving the secondary use of identifiable private information, particularly when the data sets are large or drawn from multiple institutions. In such circumstances, IRBs often impose privacy and data security protection requirements. However, since this proposed exemption category requires that the privacy safeguards at § ____.105 are in place, requiring these studies to undergo IRB review will provide little or no additional protections to subjects, while continuing to generate potentially substantial burdens on investigators and IRBs and diverting IRB resources away from research that may involve more serious ethical challenges.

Under this proposed exemption there will be greater protections for these research subjects than is currently the case. The new privacy safeguards of § ____.105 would be applied to this research, and would be the same safeguards that would be used for many other types of research under the NPRM. In addition, the scope of the exemption is limited to the specific research for

which the investigator or recipient entity requested access to the information, so the otherwise permissible uses, releases and disclosures under § ____.105(c) would not apply to research covered by this exemption. Respect for persons would be given more weight insofar as the subjects would now receive notice that research might take place, which is currently not required.

Further, in many cases, other laws such as HIPAA also provide protections in the research context for the information that would be subject to this proposed exemption (*e.g.,* clinical records), such that additional Common Rule requirements for consent may not be necessary in those contexts. Under HIPAA, these protections include, where appropriate, requirements to obtain the individual's authorization for future, secondary research uses of protected health information, or waiver of that authorization by an IRB or HIPAA Privacy Board. This proposal does not disturb those laws.

The NPRM proposal limits the use of this exemption to cases in which individuals have been informed that the information may be used in research with the goal of ensuring that research under this exemption exhibits respect for persons. In particular, by ensuring that subjects are notified that their information may be used for research, this notice requirement may enhance subject autonomy.

Alternative scopes for this provision are also proposed for consideration. A narrower scope could be envisioned that would limit the exemption to data generated by the Federal Government for which a privacy impact assessment has been conducted pursuant to section 208(b) of the E-Government Act of 2002, 44 U.S.C. 3601 *et seq.*, that fully describes the ways that the information will be accessed, used, maintained, disseminated, and protected, and there is a formal written agreement between the investigator and the federal agency that requires the investigator to apply the same practices and safeguards as those addressed in the privacy impact assessment. Such a narrower interpretation might be easier to implement, and the line between § ____.104(e)(2) and (f)(2) would be clearer.

Alternatively, it could be broadened to allow additional research uses of the information beyond the specific research for which the investigator or recipient entity obtained the information.

The proposed exemption category could also be revised to change the manner in which respect for persons would be demonstrated by requiring that individuals have been given the opportunity to opt out of any secondary research with their identifiable private information. This would mean that subjects could exercise their autonomy to choose not to allow their information to be used, although this would not meet the even higher standard of fully informed active consent. Under this alternative, which would give prospective subjects the opportunity to opt out, it could be argued that the balance would be struck even more in favor of respect for persons by limiting the exemption to research where more than prior notice was required. This would restrict the exemption to research where an even greater measure of respect for persons had occurred, that is, that the individuals had been given the right to decline to participate in research, rather than simply being notified that such research was going to take place. Public comment is sought regarding this alternative approach as well.

Finally, it also should be noted that section 511 of the Medicare Access and CHIP Reauthorization Act of 2015 requires the Secretary to issue a clarification or modification with respect to the application of these regulations to certain activities involving clinical data registries. This exemption category might allow certain research activities of these clinical data registries not otherwise covered by the proposed HIPAA-related exclusion at § ____.101(b)(2)(iv) (*i.e.*, when the clinical data registries are not part of a HIPAA covered entity or acting as a business associate), such as when a clinical data registry may receive information from a health care entity for research purposes.

(5) Questions for Public Comment

49. Public comment is sought on the types of research that should fall under the proposed exemption. Should the proposed exemption be available to all types of research using identifiable data collected for non-research purposes or should the exemption be available only to a more limited subset of research? For example, should the proposed exemption apply only for research using records and information already subject to comprehensive privacy and other protections in other Federal laws (*e.g.,* records held by the Federal Government subject to the Federal Privacy Act, or records governed by HIPAA or FERPA)?

Depending upon the scope of the exemption, the relationship between this exemption and the exemption proposed at § ____.104(f)(2) would need to be clarified. Since a major justification for including this exemption is to reduce burden on IRBs, should the proposed exemption apply only to research for which IRBs typically waive informed consent, that is, where the research could not practicably be carried out without a waiver of informed consent, and the rights and welfare of subjects will not be adversely affected by the waiver? Finally, is there a sufficient need for this exemption at all given the other proposed exclusions and exemptions?

50. Public comment is sought regarding whether the proposed exemption should be limited to research in which individuals had been informed of the potential future research use of their information, and given the opportunity to opt out of having their identifiable private information used for research. If the proposed exemption should be limited in this way, what information should be included in the opportunity to opt out? If the opportunity to opt out is made a condition of the exemption category how should it be structured (*e.g.,* how long and under what circumstances should it remain in effect) and what, if any, impact should the opt out have on other provisions of the rule, such as the ability of an IRB to waive informed consent for a subsequent research study using the individual's information? Are there other or alternative mechanisms that should be required to respect individuals' autonomy and other interests?

51. Public comment is sought regarding what should constitute notice for purposes of this exemption category. Given the many different types of data that would be covered by this provision (*e.g.,* data from private entities used for social or behavioral science research, government records for which laws already establish standards for notice, and data publicly available for harvesting from the internet), would it be possible to develop a uniform ''notice'' requirement? What type of notice, in terms of its dissemination and scope, should be considered to meet this requirement of the proposed exemption? With regard to the dissemination of the notice, should the notice requirement be permitted to be fulfilled through a general public notice, not specifically directed to individuals who are potential research subjects, such as the notice allowable under the Privacy Act? Would a prominent notice posted in all clinics or other relevant public places where information will be collected be acceptable? Should each individual whose data could be used receive their own notice, such as is required of direct treatment providers covered by the

HIPAA Privacy Rule? With regard to the content of the notice required by this proposed exemption, what kind of information should be included in the notice, such as the types of research that might be conducted, privacy safeguards, contact information, etc.?

52. Public comment is sought on whether, on the other hand, prior notice is necessary. Is the notice requirement proposed for this exemption a meaningful and important measure to respect individual autonomy, particularly if the notice requirement could be fulfilled through a general public posting? Current practices suggest that IRBs will frequently waive informed consent for studies involving the secondary use of identifiable private information collected for non-research purposes. If the exemption were to exclude the notice requirement, but continue to require application of the data security and privacy safeguards of § ____.105 and restrict the use of identifiable private information to only purposes of the specific research for which the investigator obtained the information, would the exemption better strike a reasonable balance between respect for persons and beneficence, while eliminating the current requirement for IRB review?

53. Public comment is sought as to whether this exemption would provide appropriate protections for research conducted by clinical data registries, while enabling these research activities to proceed without delay, and what should be included in guidance regarding such activities. Public comment is sought regarding the extent to which other exclusions or exemption categories would apply to research conducted by clinical data registries, such that the conditions of this exemption category would not apply.

d. Exemptions Subject to the Documentation Requirements of § ____.104(c), the Privacy Safeguards Described in § ____.105, Limited IRB Review as Described in § ____.111(a)(9), and Broad Consent in Accordance With § ____.116(c)

i. NPRM Goals

The goal of this proposed rule is to enable the conduct of research in the rapidly growing area of research involving biospecimens, especially genetic analyses, while recognizing the autonomy interests of people to decide whether or not to participate in this area of research. Some people have a particular interest in whether research will be carried out with their biospecimens, and want to exercise some control over their biospecimens. At the same time, biospecimen repositories are being created to enable innumerable research studies in the future, and the pace of technology development is such that the specific research studies to be carried out with those biospecimens is unknown at the time the biospecimens are collected.

ii. Current Rule

The current Rule requires IRB review and approval of research involving identifiable private information, including individually identifiable biospecimens. IRB waiver of informed consent is allowable under the Common Rule, if the research study satisfies the criteria for waiver of informed consent. The current Rule also allows for research without consent when a biospecimen is used for research under conditions where the investigator does not possess information that would allow him or her to identify the person whose biospecimen is being studied.

iii. ANPRM Discussion

The ANPRM considered requiring written general consent for secondary research use of biospecimens originally collected in research or non-research settings regardless of whether they include identifiers. The ANPRM proposed an excused or exempt category for research involving the secondary use of biospecimens originally collected for either research or non-research purposes if there was written broad consent for the research use of the biospecimens, typically obtained at the time of the original collection. The ANPRM also considered whether the broad consent should include check-off boxes allowing subjects to consent or decline consent for types of research raising unique concerns.

iv. NPRM Proposals

The NPRM includes two exemptions proposed in § ____.104(f) to facilitate storage, maintenance, and secondary research use of biospecimens and identifiable private information. Generally the exemption at § ____.104(f)(1) will first be employed to allow the storage or maintenance for secondary research use of biospecimens or identifiable private information, by means of broad consent being obtained. Following that, the secondary research that will be conducted using such biospecimens or identifiable private information could often be exempted under § ____.104(f)(2).

A majority of commenters opposed the suggestion that there be consent requirements for the research use of non-identifiable biospecimens collected for purposes other than the current research study. Some commenters also favored requiring IRB review and approval for specific studies involving the use of identifiable private information and identifiable biospecimens, rather than permitting the use of a broad consent for future use to satisfy the regulatory requirement for consent. These commenters indicated that IRB review of specific research studies, and the IRB's consideration of whether a study-specific informed consent should be required or whether informed consent could be waived, was more protective of human subjects than the ANPRM recommendation permitting use of a broad consent for future use.

Commenters to the 2011 ANPRM were mostly concerned with the cost and burden that would be imposed by the requirement to obtain consent for future research use of all biospecimens, regardless of identifiability. Commenters anticipated these costs to include obtaining consent from participants and the administrative efforts required to keep track of the consent status of biospecimens. Most commenters did not provide detailed cost estimates with their comments; data are specifically requested in response to this NPRM. In addition, estimates of the type and number of studies that could not be pursued using existing samples and data because of the absence of sufficient consent are requested. Comment is also sought on the value to the public and research participants of being asked their permission for research use of their data and biospecimens.

While consideration was given to the opposition expressed by ANPRM commenters of a consent requirement for secondary research use of non-identified biospecimens, the NPRM proposes to require that consent be obtained for the research use of non-identified biospecimens, but to allow for that consent to be broad. Thus, while consent would be required for the research use of non-identified biospecimens, one would not have to obtain study-specific consent for the research use of those biospecimens, drastically reducing the burden imposed by this new requirement.

The NPRM proposal includes several protections for secondary research use of biospecimens in addition to the broad consent. Research activities falling under the exemption at § ____.104(f) are subject to the requirements under proposed § ____.104(c). This would require that exemption determinations be made by someone knowledgeable of the regulations, or by the to-be-created exemption determination tool (when utilized by an investigator or other

individual). Additionally, the documentation requirement would allow institutions to better know the scope and volume of secondary research studies conducted at an institution. Also note that § ____.104(f)(1) requires that an IRB review the consent process through which broad consent would be obtained in the non-research context, to further allay ethical concerns about obtaining broad consent in clinical and other non-research contexts.

(1) Exemption for the Storage or Maintenance of Biospecimens or Identifiable Private Information for Secondary Research Use (NPRM at § ____.104(f)(1))

The first exemption in this group, at proposed § ____.104(f)(1), is for storage or maintenance for secondary research use of biospecimens or identifiable private information that have been or will be acquired for research studies other than for the proposed research study, or for non-research purposes, if the following criteria are met:

- Written consent for the storage, maintenance, and secondary research use of the information or biospecimens is obtained using the broad consent template that the Secretary of HHS will develop. Oral consent, if obtained during the original data collection and in accordance with the elements of broad consent outlined in § ____.116(c) and (d)(3), would be satisfactory for the research use of identifiable private information initially acquired in accordance with activities excluded under § ____.101(b)(2)(i) or exempt in accordance with § ____.104(d)(3) or (4), or § ____.104(e)(1); and
- The reviewing IRB conducts a limited IRB review of the process through which broad consent will be sought, and, in some cases, of the adequacy of the privacy safeguards described in § ____.105.

This exemption category only allows for the storage or maintenance for secondary research use of biospecimens or identifiable private information. Note that this exemption does not exempt the creation of any data or the actual new collection of any biospecimens from a person through a research interaction or intervention. (For example, if the proposed research activities involved creating a research repository of DNA samples that would be obtained from people through cheek swabs, the collection of the cheek swabs would mean that the creation of the research repository would require IRB review, and would not be exempt.) This exempt category is for secondary research use of biospecimens and identifiable private information and applies to biospecimens and identifiable private information that were initially collected for purposes other than the proposed research activity. The term 'other than the proposed activity' here means that the information or biospecimens were or will be collected for a different research study or for a non-research purpose.

In the case of a research study involving the actual new collection of biospecimens such as a clinical trial, the informed consent process could include obtaining informed consent for the original study (which study would not be exempt and would require IRB review and the usual type of consent document as required under § ____.116(a) and (b)), and for secondary research use of the biospecimens. The informed consent form for the latter step (the secondary research use) could make use of the Secretary's template, in which case the biospecimen would be eligible for maintenance or storage under § ____.104(f)(1) with limited IRB review or for a secondary research study under § ____.104(f)(2). If the Secretary's template for broad consent is not used, the storage or maintenance for secondary research use would not meet this exemption and the consent form would need to be reviewed and approved by an IRB, either along with the IRB review of the original study, if the maintenance and storage for secondary research is known and described, or later, if it is not. Note also that if the Secretary's template is not used, the § ____.104(f)(2) exemption, as discussed below, would not apply to exempt any actual secondary research studies conducted using the stored biospecimens. IRB review would be needed for each of those studies, unless the research met one of the proposed exclusions at § ____.101(b)(1) or (b)(3), or the exemption found in proposed § ____.104(d)(2).

This exemption requires written informed consent using the Secretary's template for broad consent for secondary research, or oral consent, in specified circumstances. This broad consent requirement will enable subjects the choice to include their biospecimens and information in this research. The consent form using the Secretary's template would include the information required in § ____.116(c). Oral broad consent would also need to include all of the elements of consent at § ____.116(c), and would only be permissible for the research use of identifiable private information, not biospecimens, when the identifiable private information was initially acquired as part of any of the following four excluded or exempt categories of research: (1) The exclusion related to research, not involving interventions, that involves the use of educational tests, survey procedures, interview procedures, or observation of public behavior (§ ____.101(b)(2)(i)); (2) the exemption related to research involving benign interventions (§ ____.104(d)(3)); (3) the exemption related to taste and food quality evaluation and consumer acceptance studies (§ ____.104(d)(4)); or (4) the exemption related to research involving the use of educational tests, survey procedures, interview procedures, or observation of public behavior (§ ____.104(e)(1)).

It is proposed that oral broad consent only be permitted to satisfy these exemptions regarding the secondary use of identifiable private information (§ ____.104(f)(1) and (f)(2)) if the identifiable private information was initially acquired as part of any of the four above-mentioned exclusion and exemption categories because these four categories are the only ones that are expected to typically involve some interaction with human subjects, and thus give investigators the opportunity to obtain oral consent from subjects for the secondary use of research data obtained as part of the initial research study.

This exemption also requires adhering to the privacy safeguards described in the proposed section § ____.105.

The exemption also includes a requirement for limited IRB review (§ ____.111(a)(9)). The purpose of this limited IRB review is to ensure that the process of obtaining consent will occur in an appropriate way, because there may be some circumstances (for example, when someone is admitted for emergency care), when the individual is not able to make an informed considered decision. This IRB review will, for many institutions, be essentially a ''one-time'' event (as opposed to being needed for specific research studies); the IRB would review an overall general institutional protocol for the manner in which people can provide broad consent for the maintenance or storage of their biospecimens for future secondary research. Such a general institutional protocol would need to identify the circumstances in which broad consent would be sought for secondary research use of biospecimens so that the IRB could determine that these circumstances are consistent with the requirements for voluntary informed consent as described in the introductory language to proposed § ____.116.

In addition, if there will be a change in the way the biospecimens and information will be maintained for the secondary research purposes, rather

than simply changing the eligibility for secondary research status of biospecimens or information already being maintained for other purposes, then limited IRB review must also ensure that the biospecimen and information protection standards are still met. For example, if it is envisioned that the identifiable private information collected will be stored both at the institution obtaining the information, and also stored at a second institution, an IRB would also need to determine if the § ____.105 privacy safeguards are adequate.

(2) Exemption for Secondary Research Use of Biospecimens or Identifiable Private Information where Broad Consent has been Sought and Obtained (NPRM at § ____.104(f)(2))

The second exemption in this exemption group, at § ____.104(f)(2), is for research involving the use of biospecimens or identifiable private information that have been stored or maintained for secondary research use, if consent for the storage and maintenance of the information and biospecimens was obtained as detailed using the broad consent template that the Secretary of HHS will develop. Note that oral broad consent would be allowed to the extent permitted under proposed § ____.104(f)(1)(i)(A). If the investigator anticipates that individual research results will be provided to a research subject, the research may not be exempted under this provision and must be reviewed by the IRB and informed consent for the research must be obtained to the extent required by proposed § ____.116(a) and (b).

This exemption category at § ____.104(f)(2) is for the actual secondary research studies that will be conducted using biospecimens or identifiable private information that have been stored for unspecified secondary research studies. This exemption does not include additional analyses being conducted to support or augment the original research study for which the information or biospecimens were originally collected.

The proposed exemption category at § ____.104(f)(2) requires that the privacy safeguards at § ____.105 are met, and that broad consent to the earlier storage or maintenance of the biospecimens and information had already been obtained consistent with the requirements of § ____.104(f)(1). This means that for secondary research using biospecimens informed consent must have been obtained using a consent form using the Secretary's template. It is presumed that research involving newborn blood spots would frequently take place using this provision.

The rationale for these two exemptions is that they provide for obtaining broad consent from subjects for the research use of specimens, honoring the principle of respect for persons, they provide protections for the information involved through the privacy safeguards of § ____.105, and the limited IRB review proposed at § ____.111(a)(9) ensures that the privacy safeguards and informed consent process are indeed adequate.

The exemption at § ____.104(f)(2) would not apply to research in which the investigator anticipates that research results will be provided to a subject. If it is anticipated that individual research results will be returned to subjects, then the research would not meet this exemption and IRB review and approval would be required, and informed consent would need to be obtained to the extent required by § ____.116(a) and (b). If the investigator does not anticipate that individual research results will be provided to a research subject as part of the research plan, but later decides to return research results to subjects, an IRB must review and approve the plan for returning these results to the subjects. It is understood that the prospective IRB review provision set forth here does not override existing law, such as the HIPAA Privacy Rule or the Federal Privacy Act, which give individuals the right to access certain information about themselves in specified circumstances. In addition, it is recognized that clinical care needs may demand prompt reporting of findings to patients who are also human subjects, in which case it is expected that investigators would anticipate that such research results will be provided to a subject, and this exemption would not apply.

It is generally recognized that where, for example, a series of genetic analyses are performed, in a significant percentage of instances investigators will be learning information, not necessarily related to the specific purpose of their studies, that would nonetheless be significant to participants in terms of making decisions about their health care. For example, it might be learned that a woman has a gene mutation that significantly increases her risk of breast or ovarian cancer. The proposed rule does not specifically impose any obligations on investigators to provide such information to participants, so long as the consent form is clear that no such information will be given to the participants. This could have a negative impact on the current efforts to increase the willingness of people to allow their biospecimens to be used in research, if they are less inclined to provide broad consent to such research when investigators are not making any commitment to return important information that is unexpectedly learned about a participant. This could lead some investigators to decide to include in their protocols provisions for returning such results to subjects. The consequence is that such protocols will not be eligible for the proposed exemption at § ____.104(f)(2), and thus would undergo full IRB review primarily for the purpose of determining what information participants should be provided regarding such ''unexpected'' (*i.e.,* not related to the purpose of the research) genetic findings. In contrast, if a study only involved use of biospecimens, and no results were to be returned to subjects, no IRB review would be required under the NPRM proposals unless IRB review is required by law (*e.g.,* FDA-regulated devices).

At the same time, it is likely that many IRBs do not have any particular unique expertise in making these determinations about returning results, which again could lead to inappropriate variability in disclosure from study to study, and would seem to be in conflict with the ethical goal of justice.

One option that has been considered would be to create a federal panel of experts to make determinations about which unexpected findings should be disclosed to human subjects in research, and what information should be given to subjects about themselves. If this alternative proposal were adopted, then it would not be necessary to have full IRB review of these protocols. A consequence of this option would be that these types of studies could be exempt even if they proposed to return research results to subjects, so long as disclosures were made consistent with the rules announced by the federal panel. However, it is not clear that such a panel's guidance would be superior to that of IRBs.

v. Questions for Public Comment

54. Public comment is sought on whether the NPRM's proposal of exemption § ____.104(f)(2) is the best option, or whether there is a better way to balance respect for persons with facilitating research.

55. Public comment is sought on whether and how the provision regarding the return of research results in the proposed exemption § ____.104(f)(2) should be revised.

56. Public comment is sought on whether there should be an additional exemption that would permit the

collection of biospecimens through minimally invasive procedures (*e.g.,* cheek swab, saliva).

e. Applicability of Exemptions to the Subparts (NPRM at § ____.104(b); Current Rule at Footnote 1)

i. Current Rule

In the current Common Rule, the application of the exemptions articulated in the current Common Rule in § ____.101(b) to the subparts is specified through footnote 1 of the current Rule. It states that the exemptions do not apply to research involving prisoners, and are also limited in their application to research involving children. The current exemption at § ____.101(b)(2) for research involving educational tests, survey or interview procedures or observations of public behavior does not apply to subpart D, except for research involving educational tests or observations of public behavior when the investigator does not participate in the activities being observed. The current exemptions do apply to subpart B.

ii. NPRM Proposals

While the exemptions in the NPRM are based largely on exemptions in the current Common Rule, not all of the exemptions proposed in the NPRM will apply to subparts B–D. Language at § ____.104(b) explains how the proposed exemptions may be applied to the subparts. The language at § ____.104(b)(1) states that all of the exemptions at § ____.104 may be applied to research conducted under subpart B. Language at § ____.104(b)(2) states that none of the § ____.104 exemptions may be applied to research conducted under subpart C, except for research aimed at a broader population that consists mostly of non-prisoners but that incidentally includes some number of prisoners. Finally, § ____.104(b)(3) states that the exemptions at § ____.104(d)(1), (2), (4), § ____.104(e)(2) and (f)(1) and (2) may be applied to research conducted under subpart D. The exemption at § ____.104(e)(1) cannot be applied to research involving children under subpart D, because protections including IRB review and parental permission are appropriate for research involving educational tests, surveys or interview procedures, or observation of public behavior when the information collected may be individually identified and sensitive in nature.

Although this NPRM does not propose changes to the HHS regulations at 45 CFR part 46, subparts B, C and D, consideration is being given to whether the proposed exemption categories articulated in § ____.104 should apply in research involving prisoners under subpart C, either if the research consists mostly of non-prisoners and only incidentally includes some number of prisoners, as proposed in the NPRM, or if the research intends to involve prisoners as research subjects. Originally developed in 1976 by the National Commission, subpart C has at times come under scrutiny for its restrictive construction. The subpart was written in the wake of harsh criticism regarding research abuses involving prisoners that occurred or became public in the 1960s and 1970s. As a result, subpart C was written to permit research involving incarcerated persons only if the study fits one of four categories at 45 CFR 46.306(a)(2) (an ''epidemiological waiver'' category was added in 2002 [51]), and requires an institution to ''certify'' to the Secretary, HHS, before research can proceed. An additional original restriction conveyed through footnote 1 of the current Common Rule specifies that research involving prisoners may not be considered exempt under any of the current exemption categories.

Public comment is requested on whether the revised exemption categories should be permitted to apply to research involving prisoners. Considerations include the preponderance of low-risk, socio-behavioral research focused on prisoner welfare, substance abuse treatment, community reintegration, and services utilization; the occurrence of prisoner-subjects in databases or registries; and the broad interpretation of the subpart C ''prisoner'' definition that includes, for example, subjects in court-mandated residential substance abuse treatment.

ii. Questions for Public Comment

57. Public comment is sought on whether research involving prisoners should be permitted to apply any or all of the exemption categories found at proposed § ____.104, either if the research consists mostly of non-prisoners and only incidentally includes some number of prisoners, as proposed in the NPRM, or if the research intends to involve prisoners as research subjects.

58. Would it be preferable for language at § ____.104(b)(2) to resemble the 2002 epidemiologic waiver criteria and state that the exemptions apply except for research where prisoners are a particular focus of the research?

59. Is the proposed application of the exemptions to subparts B and D appropriate?

f. What would change in the exemptions?

- All exemption language would be found at § ____.104.
- The eight proposed exemptions in § ____.104 would be divided into three groupings: (1) Low-risk interventions where no other requirement of the proposed rule (including informed consent and data protection) are necessary other than the determination and recording requirements (§ ____.104(d)); (2) research activities where the information protection measures at § ____.105 must be applied (§ ____.104(e)); (3) secondary research involving biospecimens and identifiable private information that requires application of privacy safeguards at proposed § ____.105, broad consent as discussed at proposed § ____.116(c), and limited IRB review as discussed at proposed § ____.111(a)(9).
- Existing exemption categories 1, 5, and 6 (current § ____.101(b)(1), (5), and (6)) would be retained at § ____.104(d)(1), (2), and (4). Specifically the current exemption for research on public benefit programs or demonstration projects (§ ____.101(b)(5) in the current Rule; § ____.104(d)(2) in the NPRM) would be clarified and OHRP's guidance would be changed to include the applicability of the exemption to cover research on public benefit and service programs that an agency does not itself administer through its own employees or agents. A requirement for publishing a list of studies under this exemption would apply for Federal agencies or departments conducting or supporting such studies.
- A new exemption would be created for certain research involving benign interventions.
- A new exemption would be created for certain research involving educational tests, survey or interview procedures, or observation of public behavior where identifiable private information was recorded so long as data protection standards are met.
- A new exemption would be created for secondary research use of identifiable private information originally collected for non-research purposes.
- A new exemption would be created for activities relating to the storage and maintenance, for secondary research use, of biospecimens and identifiable private information.
- A new exemption would be created to exempt secondary research studies

[51] 67 FR 62432 (Oct. 7, 2002).

that would use the biospecimens and identifiable private information stored or maintained under the above new exemption.

B. Proposed Changes To Obtaining, Waiving, and Documenting Informed Consent (§§ ____.116 and ____.117)

The NPRM proposals address: (1) The organization and presentation of information included in the consent document and the process to facilitate a prospective subject's decision about whether to participate in research; (2) the elements of consent, basic and additional; (3) broad consent to the storage or maintenance for secondary research use of biospecimens and identifiable private information, and the use of such stored biospecimens and information for specific research studies; and (4) attendant changes in the waiver or alteration criteria for consent.

The NPRM proposes several changes to the Common Rule with regard to the elements of informed consent and when it must be obtained (see further discussion below regarding proposed changes to the conditions for waiver of consent). In addition, it makes several new proposals that were not included in the ANPRM questions, but are offered in response to public comments received as well as internal discussions within HHS and with the other Common Rule agencies.

These include the development of a Secretary's template, which will be issued in draft for public comment at a later date (the NPRM at § ____.116(d)) for broad consent to the storage or maintenance for secondary research use of biospecimens, and identifiable private information and the use of such stored biospecimens and information for specific research studies. Broad consent would be permissible for the storage or maintenance for secondary research use of such information and biospecimens that were originally collected for either research studies other than the proposed research or non-research purposes. This broad consent document would meet the consent requirements for the storage or maintenance of biospecimens and identifiable private information for secondary research, as well as the use of such stored material for individual research studies.

Because biospecimens and information that have been collected for clinical use or purposes other than for the proposed research are often an important source of information and material for investigators, and the re-use of existing information and materials can be an efficient mechanism for conducting research without presenting additional physical or psychological risks to the individual, it seems prudent to consider changes to current regulations relating to those issues. Some critics, including potential and former research subjects, object to research performed on a person's biospecimens or information without consent. Conversely, investigators and patient advocacy groups are concerned that the need for informed consent for every use of a biospecimen or data element will greatly inhibit research. They worry that obtaining individual consent for each separate research study will create unmanageable logistical demands, making valuable research impossible.

As an additional means of increasing transparency and facilitating the development of more informative informed consent forms, it is proposed that a copy of the final version of the consent form for clinical trials conducted or supported by a Common Rule department or agency would need to be posted on a publicly available Federal Web site. Within 60 days after the trial was closed to recruitment, the awardee or the federal department or agency conducting the clinical trial would be required to post the consent document, the name of the clinical trial and information about whom to contact for additional details about the trial.

In addition to the specific changes proposed to § ____.116, comment is sought on whether Common Rule agencies should modify the definition of ''legally authorized representative'' (LAR). The current Rule defines LAR at § ____.102(c) as an individual or judicial or other body authorized under applicable law to consent on behalf of a prospective subject to the subject's participation in the procedure(s) involved in the research. While the NPRM proposes to retain this language, OHRP is aware that this definition has been problematic for states in which there is no applicable law permitting an LAR to consent in either a clinical or a research context. In the absence of such a law, it is almost always the case that community or other standards (such as institutional policies) define hierarchies or identify individuals who may provide legally acceptable consent, for clinical (non-research) purposes, on behalf of others who cannot consent for themselves. However, the current regulations are interpreted to not allow such standards to constitute applicable law for purposes of the regulations, and thus such individuals are not considered legally authorized representatives for purposes of the Common Rule. Concerns that the Common Rule's current definition of LAR may be inappropriately hindering the conduct of research with subjects who lack capacity to consent have been raised by the Secretary's Advisory Committee on Human Research Protections (SACHRP),[52] the Presidential Commission for the Study of Bioethical Issues,[53] and others in the research community.

Comment is therefore sought on whether a revision that would expand the current definition to also permit an LAR to be defined by an accepted common practice standard that is used in a state for determining who can legally consent to clinical care would be consistent with the ethical principles underlying the Common Rule. Such a revision would broaden the definition of LAR and permit investigators to use accepted common practice, such as an established state or local hierarchy, to allow another person to provide consent to research participation. In the absence of such a revision, it would remain the case that in certain states, there would appear to be no way (short of taking the often difficult legal step of obtaining the appointment of a legal guardian) to enroll subjects lacking decision-making capacity in research studies. Given that the current interpretation of current § ____.102(c) generally is based on the proposition that the person who can legally consent on behalf of someone else for a particular clinical procedure to take place should have the authority to consent for research purposes, it could be viewed as inappropriate to maintain the current Rule, which produces different results in terms of when research can take place in those states that have specific laws governing such clinical consent and those that accomplish the same legal outcome through less formal regimes.

1. Required Elements of Informed Consent (NPRM at § ____.116(a), (b))

a. NPRM Goal

Many claim that consent forms have evolved to protect institutions rather than to provide potential research subjects with some of the most important pieces of information that a person would need in order to make an informed decision about whether to

[52] Secretary's Advisory Committee on Human Research Protections. (2009, March 4). Recommendations from the Subcommittee for the Inclusion of Individuals with Impaired Decision Making in Research (SIIIDR). Retrieved from Office for Human Research Protections: *http://www.hhs.gov/ohrp/sachrp/20090715letterattach.html.*

[53] Presidential Commission for the Study of Bioethical Issues. (2015). Gray Matters: Topics at Intersection of Neuroscience, Ethics and Society. Retrieved from Projects: *http://bioethics.gov/sites/default/files/GrayMatter_V2_508.pdf.*

enroll in a research study.[54] Instead of presenting the information in a way that is most helpful to prospective subjects—such as explaining why someone might want to choose not to enroll—the forms often function as sales documents or as a means to protect against institutional liability rather than as genuine aids to good decision-making.[55] There is also a growing body of literature that suggests informed consent forms have grown too lengthy and complex, adversely affecting their ability to convey the information needed for prospective participants to make an informed decision about participating in research.[56]

The goal of the proposed changes to the informed consent form and process is to facilitate prospective subjects' decision about whether or not to participate in a research study, thereby enhancing autonomy.

b. Current Rule

Currently, under the Common Rule, investigators generally must ensure that the subjects' informed consent to participate in research is obtained.[57] The regulations currently require that the consent forms include at least eight specific items of information. Various aspects of the consent forms have been heavily criticized, as have the amount of time IRBs devote to editing and revising them.

c. ANPRM Discussion

The ANPRM discussed revising the regulations to provide greater specificity about how consent forms should be written and what information they should contain. The goal would be consent documents that are shorter, when appropriate, more readily understood, less confusing, that contain all of the key information in sufficient detail, and that can serve as an aid to help someone make an informed decision about whether to participate in a study.

d. NPRM Proposals

Public comments were largely in favor of finding ways to improve consent forms. However, commenters cited several systemic concerns that could be obstacles to shortening and simplifying forms, such as regulatory, legal, and institutional requirements, and the complexity of some studies. Of those responding to questions about the causative factors, blame for making forms long and complex was shared by sponsors of clinical trials, IRBs, regulatory agencies, and institutional legal counsel. The types of information cited as contributing to the excessive lengths of forms included the requirement to describe all reasonably foreseeable research risks and the complexity of study procedures. There was no consensus on how to better explain alternatives to research participation and few comments were submitted on this topic.

Commenters offered a few suggestions for modifying or deleting the required elements of consent, such as removing boilerplate language that only protects institutions and research sponsors, as well as removing some of the required elements for minimal risk research. However, many felt that guidance, rather than regulatory change, would better improve the development of consent forms. Although many commenters noted the need for shorter and more comprehensible consent forms, most felt that the required elements of consent articulated in the Common Rule are sufficient. Commenters overwhelmingly supported the goals articulated in the ANPRM, but cautioned against an overly prescriptive or rigid approach to consent forms. However, several commenters requested guidance on what might be included in a consent form for future research use of identifiable information and identifiable biospecimens to ensure that such forms satisfied the consent requirements of the Common Rule.

A majority of commenters supported the development of regulations or guidance designed to encourage assessment of the extent to which human subjects comprehend consent forms, at least for certain types of higher risk studies or certain types of subject populations. Others argued that the regulations at § ____.116 already contain language implying the need to ensure comprehension through the use of the terms ''legally effective informed consent'' and ''language understandable to the subject.''

Finally, many commenters supported making changes to HIPAA authorization requirements, as necessary, to conform to provisions of the Common Rule. In addition, most commenters were supportive of requiring investigators to disclose in consent forms certain information about the financial relationships they have with study sponsors.

To that end, the NPRM proposes adding new language to the introductory text of § ____.116 to address the questions asked in the ANPRM about strengthening the informed consent requirements. It reorients the language to emphasize the need to first provide essential information that a reasonable person would want to know in order to make an informed decision about whether to participate, and to provide an opportunity to discuss that information. It requires that the information be presented in sufficient detail relating to the specific research. Furthermore, in recognition of the complaints that current consent forms are too commonly complicated documents that primarily are used to protect sponsors from legal liability, the NPRM would require (as described in the in the revised introductory language to § ____.116) that the information in these forms be organized and presented in a way that did not merely provide lists of isolated facts, but rather facilitated the prospective subject's or representative's understanding of the reasons why one might or might not want to participate. For example, for some research studies, it could be important for the discussion of the purpose of the research and the reasonably foreseeable risks of the research to be discussed together so that prospective subjects would better understand how participation in the study might alter their clinical care and ultimately, their health.

It is also proposed that in obtaining informed consent, the investigator would be required to present first the information required by this section, before providing other information, if any, to the subject. This would mean that the consent document could only include the elements of consent that were required by the rule, with any other information included in an appendix. This is intended to lead to substantially shorter consent forms, with prospective subjects receiving the most important information in the body of these relatively short forms, instead of that key information being buried in a long and overly complex document.

Public comments did not provide consensus on desirable changes to the elements of informed consent. Thus,

[54] Levine RJ. Informed consent: Some challenges to the universal validity of the western model. *J Law Med Ethics* 1991;19(3–4):207–213.

[55] Menikoff J, Richards E. *What the Doctor Didn't Say: The Hidden Truth about Medical Research*. New York, NY: Oxford University Press; 2006:113–123.

[56] Beardsley E et al. Longer Consent Forms for Clinical Trials Compromise Patient Understanding: So Why Are They Lengthening? *Journal of Clinical Oncology*. 2007 Mar 20;25(9):e13–4.

[57] For general requirements for informed consent see § ____.116 in the current Rule, and 21 CFR 50.20, .25 for FDA's comparable requirements. There are provisions under the Common Rule, that allow for the waiver of some or all of the elements of informed consent (see § ____.116(c) and (d)). The Federal Food, Drug, and Cosmetic Act limits the circumstances under which informed consent can be waived. See, *e.g.,* section 520(g) (21 U.S.C. 360j(g)) Thus, FDA regulations contain only two exceptions from informed consent under 21 CFR 50.23–24.

this language aims to emphasize the necessity of addressing the basic elements of informed consent, as described in § ____.116(a), in a user-friendly but sufficiently detailed manner that facilitates comprehension of the risks and potential benefits of the research. Because commenters agree that informed consent forms should be written in appropriate language, this proposal reinforces the need to include information using language understandable to the subject. This goal is consistent with Federal Plain Language guidelines and the Federal Plain Writing Act of 2010. The Secretary will publish guidance at a later time to explain how consent forms can be written in order to comply with the requirements of this policy. It is not envisioned that the regulations would require a formal assessment to evaluate an individual's competency, but that such a practice may be appropriate for certain populations. That this ambiguity already exists in the current regulations with regard to what constitutes ''legally effective informed consent'' is acknowledged.

In addition, the NPRM proposes to clarify in the introductory language at § ____.116 that if a HIPAA authorization is combined with a consent form, the authorization elements required by 45 CFR 164.508 must be included in the consent document and not the appendices. In other words, when consent is combined with authorization, the authorization elements should be considered to constitute one of the required elements of consent.

Since research with non-identified data does not involve ''human subjects'' under proposed § ____.102(e), it is proposed that a new element of informed consent be required to better ensure that subjects are informed of the possibility that identifiers collected as part of a research study could be removed from the data and then used for secondary research studies without the protections provided by this policy. The new basic element of consent at § ____.116(a)(9) would apply to all research collecting identifiable private information. Based on the investigator's plans, the informed consent form and process would need to inform subjects either that: (1) Identifiers might be removed from the data and that the non-identified data could be used for future research studies or distributed to another investigator for future research studies without additional informed consent from the subject or the representative, if this might be a possibility; or (2) the subject's data collected as part of the research would not be used or distributed for future research studies, even in a non-identified form. This proposed additional element of informed consent is intended to create greater transparency and enable prospective research subjects to make a more informed decision about whether to participate in research. Prospective subjects can always decline to participate in the initial research if they object to the statement provided. These changes would not apply to ongoing human subjects research in which human subjects were involved prior to the effective date of this rule.

It is anticipated that very few investigators will elect to offer the option to restrict the future research use of non-identified data, in part because of the challenges of marking and tracking such decisions. However, should they offer this option, then institutions and investigators will have to develop a system for tracking impermissible uses of non-identified information. Since most investigators will likely elect to inform subjects that identifiers might be removed from the data and distributed for future research without additional informed consent, it would be reasonable for investigators and institutions to generally assume that the secondary research use of non-identified information would be permissible unless marked otherwise.

It is possible that investigators could choose to include additional statements about their plans to use non-identified data for future research studies. For example, investigators could agree to give subjects an option about whether subjects' non-identified research data could be used for future research studies, or could agree to seek additional informed consent from subjects before using or sharing non-identified data for future research studies. However, it is anticipated that such commitments by investigators would be uncommon, and so the NPRM does not propose including such statements in the informed consent form or process. If such commitments about the future use of non-identified information were made by investigators in the informed consent form or process, investigators would need to satisfy these commitments, which would also require the development of a tracking system.

The NPRM also proposes adding three additional elements of consent at § ____.116(b)(7)–(9) that, when appropriate, would be required to be included in the informed consent form and process. These three additional elements of consent all pertain to issues that have become more relevant in recent years as science has advanced and the nature of research has changed. The proposed new element at § ____.116(b)(7) would require that prospective subjects be informed that their biospecimens may be used for commercial profit and whether the subject will or will not share in this commercial profit. The proposed new element at § ____.116(b)(8) would require that prospective subjects be informed of whether clinically relevant research results, including individual research results, will be disclosed to subjects, and if so, under what conditions. The proposed new element at § ____.116(b)(9) would provide subjects or their legally authorized representatives with an option to consent, or refuse to consent, to investigators re-contacting the subject to seek additional information or biospecimens or to discuss participation in another research study. Since the information that would be required to be disclosed under these three proposed additional elements of consent is often relevant to an individual's decision of whether to participate in a research study, currently such information is sometimes included in informed consent forms under the current Common Rule. The NPRM proposes to require inclusion of these additional elements, when appropriate, to better ensure that prospective subjects are more consistently provided with this information when it is information that a reasonable person would want to know in order to make an informed decision about whether to participate in a research study. These three proposed additional elements of consent are also relevant to seeking an individual's broad consent to the storage, maintenance, and secondary research use of biospecimens or identifiable private information, so it is proposed that broad consent obtained under § ____.116(c) also include these additional elements, when applicable. These clarifications and additions would have to meet the documentation requirements at § ____.117(b)(1)–(2).

e. What would change?

- New language would strengthen the informed consent requirements to make sure that the most appropriate information is presented to prospective subjects in sufficient detail and in a format that is tied to understandability.
- New language would clarify that, when a HIPAA authorization is combined with consent, the HIPAA authorization elements must be part of the core elements of the consent.
- When identifiable private information is collected for research purposes, consent would be required to notify subjects if their non-identified

information could be utilized for future research studies without additional consent.

- The Secretary will publish guidance in the future to explain how consent forms can be written to comply with the regulatory requirements.
- Three additional elements of consent would be required, when appropriate.

f. Question for Public Comment

60. What topics should be addressed in future guidance on improving the understandability of informed consent?

2. Broad Consent to the Storage, Maintenance and Secondary Research Use of Biospecimens and Identifiable Private Information (NPRM at § ____.116(c), (d)).

a. NPRM Goal

One of the primary objectives of the NPRM is to make the strength of protections commensurate with the level of risks of the research, and by so doing, reduce unnecessary administrative burdens on research. That objective has been viewed as being particularly relevant to research involving only secondary use of biospecimens and identified data, which is relatively low-risk if appropriate protections of privacy and confidentiality are in place, including protections against the misuse of biospecimens or data that could cause harm to research subjects.

b. Current Rule

The increasing use of information and biospecimens in research, often into the future and beyond the point at which an individual is directly involved in the information or biospecimen collection, requires rethinking the elements of consent in those circumstances to ensure that potential research subjects understand how their information or biospecimens might be used as well as the risks and potential benefits of such use. Critics of the existing rules have observed that the current requirements for informed consent for future research with pre-existing information and biospecimens are confusing and consume substantial amounts of investigators' and IRBs' time and resources.

Under the current requirements of the Common Rule, if identifiers are removed, biospecimens and data that have been collected for purposes other than the proposed research can be used without any requirement for informed consent. Similarly, under the HIPAA Privacy Rule, if data are de-identified or HIPAA identifiers do not accompany biospecimens, then the Privacy Rule does not apply. When identifiers have not been removed, under the Common Rule investigators may be allowed in certain situations to obtain a consent that is broader than for a specific research study, such as for a research repository that involves obtaining biospecimens from living individuals to create a repository for future research studies. In these cases, an IRB may determine that the original consent for the creation of the research repository satisfies the requirements of the Common Rule for the conduct of the future research, provided that the elements of consent under § ____.116 continue to be satisfied for the future research. Despite this existing flexibility in the Common Rule, it is believed that the current elements of consent required under § ____.116 often do not continue to be satisfied for the future research.

With respect to HIPAA, HHS's prior interpretation of the HIPAA Privacy Rule was that authorizations for research needed to be study-specific, and thus, that such authorizations could not authorize certain future unspecified research. However, in January 2013, the Office for Civil Rights modified its prior interpretation.[58] Under the new interpretation, an authorization now may be obtained from an individual for uses and disclosures of protected health information for future research purposes, so long as the authorization adequately describes the future research such that it would be reasonable for the individual to expect that his or her protected health information could be used or disclosed for the future research purposes.

c. ANPRM Discussion

The ANPRM suggested generally requiring written consent for research use of any biospecimens collected for clinical purposes after the effective date of the new rules (such as research with excess pathological specimens). Such consent could be obtained by use of a brief standard consent form agreeing to generally permit future research. This brief consent could be broad enough to cover all biospecimens to be collected related to a particular set of encounters with an institution (*e.g.,* hospitalization) or even to any biospecimens to be collected at any time by that institution. These studies using biospecimens collected for clinical purposes would also fall under the expanded and revised exempt categories, and thus would not require IRB review or any routine administrative or IRB review but would be subject to the data security and information protection standards. This discussed modification would conform the rules for research use of clinically collected biospecimens to the rules for biospecimens collected for research purposes. The general rule would be that a person needs to give consent, in writing, for research use of their biospecimens, though that consent need not be study-specific, and could cover open-ended future research. The ANPRM envisioned that consent could be waived in certain limited circumstances and sought comment on appropriate criteria for waiving consent.

The ANPRM suggested that this standardized broad consent form would permit the subject to say no to all future research. In addition, the ANPRM acknowledged that there are likely to be a handful of special categories of research with biospecimens that, given the unique concerns they might raise for a significant segment of the public, could be dealt with by check-off boxes allowing subjects to separately agree (or not) to that particular type of research. More specifically, the ANPRM asked whether certain flexible consent requirements could be imposed on some of these studies that would permit the use of a broad consent for future use, with a requirement that a subject's specific consent would be required before their biospecimens could be used for special categories of research.

Further, the ANPRM suggested maintaining the current prohibition that participation in a research study (such as a clinical trial) could not be conditioned on agreeing to allow future open-ended research using a biospecimen. With regard to the secondary research use of pre-existing data, on those occasions when oral consent was acceptable under the regulations for the initial data collection, the ANPRM envisioned that subjects would have typically provided their oral consent for future research at the time of the initial data collection; a written consent form would not have to be signed in that circumstance.

The ANPRM also noted that there would be rules that would allow for waiver of consent under specified circumstances, though those conditions would not necessarily be the same as those for other types of research.

d. NPRM Proposal

Similar to what was discussed in the 2011 ANPRM, the NPRM proposes to allow broad consent to cover the storage or maintenance for secondary research use of biospecimens and identifiable private information. Broad consent would be permissible for the storage or maintenance for secondary research of such information and biospecimens that

[58] 78 FR 5611–5613 (Jan 25, 2013).

were originally collected for either research studies other than the proposed research or non-research purposes. The broad consent document would also meet the consent requirement for the use of such stored biospecimens and information for individual research studies. As is currently the case, consent would not be required for the secondary research use of non-identified private information, such as the research use of medical records that have had all identifiers removed. The NPRM also proposes to facilitate research that uses information or biospecimens collected for purposes other than the currently proposed research by adding a new consent provision for such research at § ____.116(c), which would permit individuals to provide broad consent for the storage or maintenance for secondary research use of their information and biospecimens that would not be study-specific, and would be sufficient to satisfy the consent requirement for two proposed exemptions at § ____.104(f)(1) and (f)(2).

Since it is proposed that the definition of human subject be expanded to include all biospecimens, the NPRM proposes to facilitate research using biospecimens by permitting broad consent to be obtained for their storage or maintenance for secondary research. In addition, a new exemption at § ____.104(f)(2) would permit the secondary research use of biospecimens without a subject being given information about the specific research study if broad consent under § ____.116(c) and (d) was obtained and the privacy safeguards at § ____.105 were met.

Public comments on the 2011 ANPRM revealed variable opinions on the issue of broad consent. Several commenters indicated that there is no need for additional regulations, with one university stating that it ''strongly opposes more restrictive regulations about the use of these biospecimens and sees no need to change the current regulations, even or perhaps especially in the case of secondary data analysis.'' Other commenters opposed broad consent, stating that investigators and clinicians should obtain specific consent from individuals for each research project. This opposition was made on the ethical grounds that because individuals are not fully informed of specific research purposes for broad consent, they can never be truly informed about the use of their data. In contrast, other commenters expressed clear support for general consent for secondary research use of biospecimens and data collected during research to exempt the research from IRB review, noting that ''we support the suggestion in the ANPRM to encourage general consent for the secondary research use of biospecimens and data and where this is not obtained IRB review is required.'' Other commenters favored requiring IRB review over permitting the use of a broad consent to approve secondary research use of identifiable data or biospecimens. These commenters believed that IRB consideration of consent requirements for individual research studies was more protective of human subjects than the ANPRM suggestions to permit broad consent for future use.

It is envisioned that the proposed broad consent provision would be used by institutions and investigators to give individuals the choice to either allow or disallow the use of their biospecimens and identifiable private information for secondary research. In some cases, institutions would be expected to seek broad consent under § ____.116(c) and (d) as part of a research protocol to create a research repository of biospecimens or information. However, in other cases it is expected that institutions, particularly institutions that do not typically conduct human subjects research, might not develop a research protocol to create a research repository, but still choose to seek broad consent from individuals for the research use of their biospecimens or identifiable private information. In such cases, these institutions might simply ''tag'' biospecimens and information as either available or not available for secondary research.

Since broad consent is a different form of informed consent than informed consent for a specific research study, in which individuals must be given information about a particular research study to be conducted with their biospecimens and information, the proposed requirements for broad consent under § ____.116(c) and (d) would include several of the basic and additional elements of informed consent under § ____.116(a) and (b), but not all, and would include several additional required elements. The proposed elements of broad consent are intended to ensure that the individual would be provided with sufficient information to make an informed decision about whether to agree to provide broad consent for a wide variety of research that may be unforeseen at the time in which consent is being sought.

The NPRM proposes to require that the broad consent describe the biospecimens and identifiable private information that would be covered by the consent, recognizing that the biospecimens and information to be used in future research studies might be collected after the consent was obtained. Broad consent for the research use of biospecimens or identifiable private information that were originally collected for a research study would generally be described in the consent document for the study that would be generating the research biospecimens or information. Therefore, it is proposed that broad consent to the secondary research use of biospecimens and identifiable private information collected as part of a research study could cover all such research material.

However, in the non-research context, it is recognized that the biospecimens and information that the subject would be asked to permit to be stored or maintained and used for a wide range of secondary research studies would not be as readily understood as in the research context, since such non-research collections are usually less predictable or defined. Therefore, the NPRM proposes that broad consent for the research use of biospecimens or identifiable private information obtained for non-research purposes would be limited to covering either or both of the following: (1) Biospecimens or identifiable private information that exist at the time at which broad consent is sought; and (2) biospecimens or identifiable private information that will be collected up to 10 years after broad consent is obtained for adult subjects, and, for research involving children as subjects, biospecimens or identifiable private information that will be collected up to 10 years after broad consent is obtained or until the child reaches the legal age of consent to the treatments or procedures involved in the research, whichever comes first.

The rationale for these limitations is that individuals will not know what biospecimens and information about them will be collected by an institution in the future. The 10-year time limit may make it more likely that an individual will have a better understanding of the biospecimens and information that would be covered by the broad consent, and may be a sufficiently long enough time period to appropriately facilitate secondary research using biospecimens and information. The NPRM proposes to include the standard for who is a child based upon the definition of ''children'' as defined at 45 CFR 46.402(a). At the time the child became an adult, the broad consent or permission would no longer be valid and either broad consent would need to be sought from the child-turned adult, or the investigator would need to seek a waiver of informed consent in order to use the individual's

biospecimens or identifiable private information for research, unless one of the exclusions or exemptions were applicable.

The Common Rule departments and agencies contemplated proposing that the scope of broad consent to secondary research use of individually identifiable clinical information or biospecimens that were originally collected for non-research purposes would be limited to (1) clinical information and biospecimens already existing at the institution at the time broad consent was sought, and (2) clinical information and biospecimens collected as part of an identified clinical encounter. Although it was recognized that this limitation related to an identified clinical encounter would give individuals more meaningful information about the scope of future clinical information and biospecimens that would be covered by their broad consent, it was determined that limiting the scope of the broad consent in this manner would be very difficult to implement and would require rigorous tracking on an individual-subject basis. Therefore, this proposal was not included in the NPRM, and was instead replaced with the above proposal that uses a limitation based on a period of years.

In addition, the Common Rule departments and agencies contemplated proposing that for nonclinical information collected for non-research purposes (*e.g.,* education and court records, financial records, military records, employee records, or motor vehicle records), broad consent would only be required to include a clear description of the types of records or information that were or will be collected and the period of time or event during which information collection may occur. However, it was decided that all biospecimens and identifiable private information originally collected for non-research purposes should be bound by the same limitations, regardless of whether the materials were originally collected for clinical or nonclinical purposes.

The proposed element of broad consent, at (§ ____.116(c)(1)(iv)), includes a requirement that subjects be informed that they may withdraw consent, if feasible, for research use or distribution of the subject's information or biospecimens at any time without penalty or loss of benefits to which the subject is otherwise entitled. Information that has been stripped of identifiers might not be traceable. Thus, it might not be feasible to withdraw consent for future use or distribution in this case. If, however, an investigator committed to permitting a subject to discontinue the use of such information, it is expected that the investigator would honor this commitment by not stripping identifiers. The regulations would not require investigators to make such a commitment.

Another of the proposed elements of broad consent, at (§ ____.116(c)(1)(viii)), relates to the public posting of non-identifiable data about a subject. This proposed element of broad consent would include an option, when relevant, for an adult subject or the subject's legally authorized representative to consent or refuse to consent, to the inclusion of the subject's data, with removal of the identifiers listed in the HIPAA Privacy Rule at 45 CFR 164.514(b)(2)(i)(A) through (Q), in a database that is publicly available and openly accessible to anyone. This provision is being proposed in the context of increasing interest in inviting study participants to allow their study data, in some cases including genomic data, to be made publicly available in order to maximize the potential for research that spurs increased understanding of disease processes. Under this provision, the consent document would be required to prominently note the option for the participant to allow the investigator to publically post (*e.g.,* on a Web site) the participant's genomic or other potentially identifiable sensitive information, and to include a description of the risks associated with public access to the data.

To facilitate the use of broad consent, the NPRM proposes that the Secretary of HHS will publish in the **Federal Register** templates for broad consent that would contain all of the required elements of consent in these situations. It is envisioned that there would be at least two broad consent templates developed: One for information and biospecimens originally collected in the research context, and another for information and biospecimens originally collected in the non-research context.

In addition, two exemptions are proposed related to facilitating secondary research use of biospecimens and identifiable private information when the Secretary's broad consent template is used. These exemptions are described in section II.A.3 of this preamble.

The NPRM also proposes that the template for consent established by the Secretary may serve as the written consent form in circumstances when the proposed exemption categories at § ____.104(f) require written consent. In circumstances where § ____.104(f)(1) allows for oral consent, a subject's oral consent for secondary research use of identifiable private information must be documented such that the consent is associated with the subject's identifiable information. If this requirement is met through the use of written documentation, the subject would not be required to sign anything.

e. What would change?

- No change would be made in the current regulatory framework allowing research use of non-identified private information without consent, except that, when relevant, individuals would be given an option to consent or refuse to consent to the inclusion of their data, with the removal of certain identifiers, in a publicly available database.
- Broad consent would be permissible for the storage or maintenance for secondary research use of biospecimens and identifiable private information, and for the use of such stored material for individual research studies.
- No change would be made to the definition of ''legally authorized representative.''

f. Questions for Public Comment

61. Public comment is sought on whether broad consent to secondary research use of information and biospecimens collected for non-research purposes should be permissible without a boundary, or whether there should be a time limitation or some other type of limitation on information and biospecimens collected in the future that could be included in the broad consent as proposed in the NPRM. If a time limit should be required, is the NPRM proposal of up to 10 years a reasonable limitation? Would a limitation related to an identified clinical encounter better inform individuals of the clinical information and biospecimens that would be covered by a broad consent document?

62. Public comment is sought on whether all of the elements of consent proposed at § ____.116(c) should be required for the secondary use of biospecimens or identifiable private information originally collected as part of a research study that was conducted without consent because either the original research study met an exclusion or exempt category of research, or a waiver of consent was approved by an IRB.

63. Public comment is sought on whether oral consent should be permissible in limited circumstances as proposed under exemption § ____.104(f)(1).

64. Would research subjects continue to be appropriately protected if the

definition of ''legally authorized representative'' were broadened to include individuals authorized by accepted common practice to consent on behalf of another individual to participation in clinical procedures? If the definition of ''legally authorized representative'' was broadened in this way, public comment is sought on the interpretation of ''accepted'' and ''common'' as these terms would be used in the revised definition.

3. Waiver of Informed Consent or Documentation of Informed Consent (NPRM at §§ ____.116(e), (f) and ____.117)

a. NPRM Goals

The goals of the proposals related to the waiver of informed consent and the documentation of informed consent are to uphold individuals' autonomy interests in determining whether their biospecimens and identifiable private information may be used for secondary research, to facilitate the recruitment of prospective research subjects, and to create more flexible rules for documenting informed consent for certain subject populations.

b. Current Rule

Currently the Common Rule permits an IRB to waive the requirements for obtaining informed consent under two sets of circumstances described at § ____.116(c) or (d)). The most common set of circumstances requires that four specific criteria be satisfied (§ ____.116(d)).

Under the current Common Rule at § ____.117(c), IRBs may waive the requirement for the investigator to obtain a signed consent form for some or all subjects. The current criteria for such a waiver may not be flexible enough for dealing with a variety of circumstances, such as when federally sponsored research is conducted in an international setting where for cultural or historical reasons signing documents may be viewed as offensive and problematic.

c. ANPRM Discussion

The ANPRM asked whether changes to the regulations would clarify the current four criteria for waiver of informed consent and facilitate their consistent application. The ANPRM also asked for comments on the information investigators should be required to provide to prospective subjects in circumstances where the regulations would permit oral consent. Additional questions focused on whether there are additional circumstances under which it should be permissible to waive the usual requirements for obtaining or documenting informed consent, and whether there are types of research in which oral consent without documentation should not be permitted.

d. NPRM Proposals

Many commentators have argued that these conditions for waiver of consent are vague and applied haphazardly at different institutions.[59] [60] In response to these concerns, SACHRP, through its Subcommittee on Subpart A, developed several recommendations regarding the interpretation of these waiver criteria.[61] In particular, commenters have questioned the meaning of the criterion at § ____.116(d)(2) that the waiver or alteration will not adversely affect the rights and welfare of the subjects. Questions have also been raised about the meaning of the term ''practicably'' as used in § ____.116(d)(3), which states that the research could not practicably be carried out without the waiver or alteration.

Further, some have argued that the requirements for obtaining waivers of informed consent or waivers of documentation of informed consent are confusing and inflexible, which leads to inconsistent application.[62] These problems may not be inherent in the language of the Common Rule, but there may be some changes to the regulations or clarifications as to how to interpret and implement such regulations that could improve informed consent forms and the informed consent process.

The NPRM offers several proposals related to the waiver or alteration of informed consent provisions (§ ____.116(c) and (d) in the current rule, § ____.116(e) and (f) in the NPRM). The NPRM proposes at § ____.116(f)(1)(iv) to retain the language found in § ____.116(d)(2) of the current Rule regarding the necessity to evaluate the rights and welfare of subjects before issuing a waiver of consent or altering consent procedures. Despite the vagueness of the term, IRBs should consider whether there are considerations distinct from the risk of harm and discomfort that the IRB should be able to take into account in deciding whether to approve a waiver or alteration of informed consent. Note that SACHRP's recommendations included a comment that the IRB should determine ''. . . that the waiver or alteration does not adversely impact the ethical nature or scientific rigor of the research. . . ,'' which implies that there could be ethical considerations other than the degree of risk that could legitimately affect the IRB's decision.

This criterion can be interpreted to include rights conferred by pertinent federal law or regulation, relevant state or local law, the stipulations at § ____.101(e) and (f) (in both the NPRM and the current Rule), or laws in other countries where research is to be conducted. It could also include considerations of privacy or the right to decide how someone is going to be treated, where the IRB determines that subjects have such a right that the waiver would adversely impact, or where the waiver would preclude them from obtaining a benefit they would otherwise receive. We recognize that further guidance regarding this criterion would be helpful.

HHS has also evaluated the utility of the term ''practicably'' contained in the elements of waiver or alteration of consent (§ ____.116(d)(3) in the current Rule). The NPRM proposes to keep this terminology at § ____.116(f)(1)(ii) in the NPRM. SACHRP has noted that the commonly accepted definitions of the term ''practicably'' are (1) feasible; (2) capable of being effected, done or put into practice; and (3) that may be practiced or performed; capable of being done or accomplished with available means or resources. SACHRP emphasized this criterion states that the research could not practicably be carried out without the waiver or alteration. In other words, it would not be practicable to perform the research (as it has been defined in the protocol by its specific aims and objectives) if consent was required. Thus it is impracticable to perform the research, and not just impracticable to obtain consent. SACHRP also offered the following concepts to help an IRB determine whether the research could not be practicably carried out without the waiver of consent: (1) Scientific validity would be compromised if consent was required; (2) ethical concerns would be raised if consent were required; (3) there is a scientifically and ethically justifiable rationale why the research could not be conducted with a population from whom consent can be obtained; (4) practicability should not be determined

[59] Green LA, Lowery JC, Kowalski CP, Wyszewianski L. Impact of institutional review board practice variation on observational health services research. *Health Serv Res* 2006;41:214–230.

[60] Sanders AB, Hiller K, Duldner J. Researchers' understanding of the federal guidelines for waiver of and exception from informed consent. *Acad Emerg Med* 2005;12:1045–1049.

[61] Secretary's Advisory Committee on Human Research Protections (2008, January 31). SACHRP Letter to HHS Secretary. Retrieved from Advisory Committee (SACHRP): *http://www.hhs.gov/ohrp/sachrp/sachrpletter013108.html*.

[62] *See supra* note 59.

solely by considerations of convenience, cost, or speed.[63]

SACHRP's recommendations are consistent with OHRP's interpretation of this waiver criterion. Consideration was given to replacing the term practicably with another term such as feasibly, but HHS is uncertain whether such a change would improve the understanding of this criterion. Thus the NPRM proposes to retain this phrase.

Few comments to the 2011 ANPRM were received on this topic although many commenters expressed support for clarifying the key terms through guidance or altering the criteria. In particular, most comments on this topic noted the confusion that IRBs face when trying to understand the meaning of the terms ''practicably'' and ''adversely affect the rights and welfare of subjects.'' Some commenters expressed the opinion that the waiver criterion concerning rights and welfare should be interpreted to include reference to rights conferred by other federal laws or regulations, state or local laws, or laws in other countries where research is to be conducted. Some comments reflected concerns about privacy or security. Several commenters also pointed to the need to consider community norms throughout the consent process, including its documentation.

The NPRM proposes to add a new waiver criterion at § ____.116(f)(1)(iii), which would require that, for research involving access to or use of identifiable biospecimens or identifiable information, the research could not practicably be carried out without accessing or using identifiers. This criterion was modeled on the comparable criterion in the HIPAA Privacy Rule, which requires that the research could not practicably be conducted without access to and use of the protected health information. The principle embodied in this additional criterion is that non-identified information should be used whenever possible in order to respect subjects' interests in protecting the confidentiality of their data and biospecimens.

Additional more stringent waiver conditions apply to research involving biospecimens, specifically that (1) there are compelling scientific reasons for the research use of the biospecimens; and (2) the research could not be conducted with other biospecimens for which informed consent was or could be obtained. Under this new, more stringent waiver standard, the circumstances in which a waiver could be granted by an IRB should be extremely rare.

The Common Rule departments and agencies considered whether to require institutions or IRBs to report to OHRP when this waiver of consent for research involving the use of biospecimens was approved by an IRB. If such a reporting were required, it is envisioned that OHRP could use the information to consider whether the waiver provision was being implemented appropriately or whether regulatory changes might be needed (*e.g.,* because such waivers were too frequently being granted). It is estimated that such a reporting requirement would constitute almost no burden to institutions, since the very premise behind the waiver provision is that such waivers should be extremely rare. It is also recognized that such a reporting requirement might deter IRBs from utilizing the waiver provision. The NPRM does not include a reporting requirement to OHRP when this waiver of consent is approved by an IRB, but public comments are requested on whether such a reporting requirement should be included in the final rule.

The Common Rule departments and agencies also considered whether the NPRM should propose that a waiver of consent not be permissible for secondary research involving the use of biospecimens. The purpose of such a requirement would be to encourage investigators to seek broad consent for such research. This proposal was not included in the NPRM, but public comments are requested on whether such a prohibition to waive informed consent should be included in the final rule.

In addition, the NPRM proposes that the Common Rule prohibit IRBs from waiving informed consent if individuals were asked and refused to provide broad consent to the storage and maintenance for secondary research use of biospecimens and identifiable private information. If a subject refused to provide broad consent, it is proposed that this refusal would need to be recorded by the investigator to better ensure that the subject's wishes would be honored.

The proposal to not allow any waivers of consent by an IRB with regard to the secondary research use of identifiable private information if an individual was asked to consent to such use, and refused to consent, was thoroughly considered during the drafting of this document. On the one hand, a core initial motivation for this NPRM has been the recognition that we should not be imposing unnecessary burdens on low-risk research that is capable of producing important knowledge. Re-using data that has been generated for other purposes, when appropriate protections for privacy and confidentiality are in place, seems to fit within that category.

Moreover, with society's growing abilities to rapidly generate massive data sets, and manipulate such data using cutting-edge algorithms, research using ''big data'' seems more important than ever. At the same time, however, it is recognized that if an individual is asked to provide consent and declines or refuses to do so, the individual's choice should be honored, except perhaps under only very rare circumstances that justify overriding an individual's autonomy interest.

Most of the provisions in this NPRM regarding the research use of identifiable private information have led to the conclusion that, when there are appropriate privacy protections in place, the balance between respect for persons and beneficence should come out in favor of facilitating the research, including not requiring informed consent in many instances. In recognition of this circumstance, while the NPRM proposes new consent requirements related to biospecimens (justified primarily by the special autonomy interest of a person in controlling the research use of such biospecimens), it does not impose such consent requirements with regard to research use of a person's identifiable private information. Accordingly, in most respects, the current Rules—which do allow such use without consent, provided that an IRB has reviewed the study and found that it meets the criteria for the waiver of consent—are retained with regard to the secondary research use of such information. For research involving the secondary use of identifiable private information, waivers of consent appear to currently be quite frequently given by IRBs, and represent a significant (and likely growing) portion of the research universe.

Accordingly, even after the implementation of this NPRM, an individual will still generally not have the right to prevent secondary research taking place using their identifiable private information, in the event that an IRB approves a waiver of consent for such a study. (Indeed, this is only one of the circumstances in which the NPRM allows such research to take place without consent; the NPRM has actually expanded such circumstances through some of the exclusions and exemptions, based on the ethical analysis mentioned above.) The main alteration of this rule by the NPRM

[63] See Secretary's Advisory Committee on Human Research Protections (2008, January 31). SACHRP Letter to HHS Secretary. Retrieved from Advisory Committee (SACHRP): *http://www.hhs.gov/ohrp/sachrp/sachrpletter013108.html.*

would be in the circumstance described above: Where the individual happened to be asked to sign a broad consent regarding the use of that information, and they refused to do so. If that happened, an IRB would no longer be able to waive consent.

This is a complicated issue, and as discussed below, comments are sought on various aspects of the proposal to allow for broad consent for secondary use of identifiable private information, including whether it is appropriate to include the limitation on an IRB's ability to waive consent where a person has been asked to sign a broad consent form, but refused.

The NPRM also clarifies that waivers of informed consent and the waivers related to documenting informed consent might not be permitted for research subject to FDA regulation. For example, research conducted with a waiver of informed consent, or its documentation, may, if submitted in support of a marketing application to FDA, become subject to certain applicable informed consent requirements under 21 CFR part 50.

A provision has also been added at § ____.116(g) in the NPRM to address concerns that the current regulations require an IRB to determine that informed consent can be waived under the current § ____.116(d) (§ ____.116 (e) and (f) in the NPRM) before investigators may record identifiable private information for the purpose of identifying and contacting prospective subjects for a research study. This requirement to waive informed consent is viewed as burdensome and unnecessary to protect subjects, and is not consistent with FDA's regulations, which do not require informed consent or a waiver of informed consent for such activities. This proposal in the NPRM is intended to address these concerns and to make the Common Rule consistent with the FDA's regulations by eliminating the requirement for the IRB to waive informed consent for these activities while explicitly assuring that the information will be protected.

With regard to documentation requirements, the NPRM proposes to alter the language at § ____.117(b)(1) to specify that the consent document should include only the language required by § ____.116, with appendices included to cover any additional information. The goal here is to reduce the length and complexity of the document and to ensure that the elements of information essential to decision-making receive priority by appearing in the main document.

In addition, the NPRM would make it explicit in the regulatory language at proposed § ____.117(c)(1)(iii) that if the subjects are members of a distinct cultural group or community for whom signing documents is not the norm, so long as the research presents no more than minimal risk of harm to subjects and provided there is an appropriate alternative mechanism for documenting that informed consent was obtained, the requirement to obtain a signed consent form may be waived. Documentation must include a description as to why signing forms is not the norm for the distinct cultural group or community.

Finally, as discussed above, to facilitate tracking of broad consent to storage or maintenance for secondary research use of biospecimens or identifiable private information, and to provide information to IRBs should IRB review be required, waiver of documentation of consent for the research use of such biospecimens would not be allowed based upon a new provision at § ____.117(c)(3). The regulatory language proposed at § ____.117(c)(4) would also clarify that waivers of documentation may not be permitted for research subject to regulation by FDA.

e. What would change?

- A new waiver criterion would be added at § ____.116(f)(1)(iii) requiring that, for research involving access to or use of biospecimens or identifiable information, the research could not practicably be carried out without accessing or using identifiers.
- Additional waiver criteria would apply to research involving the use of biospecimens.
- If a person was asked to provide broad consent to store or maintain for secondary research use biospecimens or identifiable private information and refused to do so, a waiver of consent would not be allowed with respect to the research use of such person's biospecimens or private identifiable information.
- A new provision would be added at § ____.116(g) stating that an IRB may approve a research proposal in which investigators obtain identifiable private information without individuals' informed consent for the purpose of screening, recruiting, or determining the eligibility of prospective human subjects of research, through oral or written communication or by accessing records, in order to obtain informed consent, if the research proposal includes an assurance that the investigator will implement standards for protecting the information obtained in accordance with and to the extent required by § ____.105.
- The language at § ____.117(b)(1) would be altered to specify that the consent document should include only the language required by § ____.116, with appendices included to cover any additional information. The goal here is to reduce the length and complexity of the document and to ensure that the elements of information essential to decision-making receive priority by appearing in the consent document.
- A new provision would be added at § ____.117(c)(1)(iii) allowing a waiver of the requirement for a signed consent form if the subjects are members of a distinct cultural group or community for whom signing documents is not the norm. This would be allowed only if the research presents no more than minimal risk of harm to subjects and provided there is an appropriate alternative method for documenting that informed consent was obtained.

f. Questions for Public Comment

65. Public comment is sought on how the waiver criterion regarding ''practicably'' at § ____.116(d)(3) could be explicitly defined or otherwise clarified (*e.g.,* what term should replace ''practicably''?).

66. Public comment is sought on the proposed differences between the criteria for waiving informed consent for the research use of biospecimens versus identifiable information.

67. Public comment is sought on whether the proposal to permit an IRB to waive consent for research involving the use of biospecimens should be included in the regulations.

68. Public comment is sought on the proposal to permit an IRB to waive consent for the secondary use of biospecimens or information originally collected for *research* purposes, even if the original research study required subjects' informed consent.

69. Public comment is sought regarding how likely investigators are to seek broad consent for the use of identifiable private information (as contrasted with biospecimens), given that there are provisions within the NPRM that would make it easier to do such research without consent (such as the new exemption at § ____.104(e)(2)). In this regard, note that the NPRM proposal to prohibit waiver of consent by an IRB if a person has been asked for broad consent and refused to provide it might create a disincentive on the part of investigators from choosing to seek broad consent for research involving secondary use of identifiable private information. Given the costs and time and effort involved in implementing the system for obtaining broad consent for the use of identifiable private

information and tracking when people provide consent or refuse to do so, are the benefits to the system likely to outweigh the costs, and if so, should the broad consent provisions be limited to obtaining broad consent for research use of biospecimens?

70. Public comment is sought on the proposed prohibition on waiving consent when an individual has been asked to provide broad consent under § ____.116(c) and refused. In particular, how would this prohibition on waiving consent affect the secondary research use of identifiable private information? If an individual was asked to provide such consent, should the absence of a signed secondary use consent be considered a refusal? Does this prohibition on waiving consent for the secondary use of identifiable private information create a disincentive for institutions to seek broad secondary use consent and instead seek a waiver of consent from an IRB? Under what circumstances, if any, would it be justified to permit an IRB to waive consent even if an individual declined or refused to consent?

4. Posting of Consent Forms

a. NPRM Goals

Public posting of consent forms is intended to increase transparency, enhance confidence in the research enterprise, increase accountability, and inform the development of future consent forms.

b. NPRM Proposal

Thus, the NPRM proposes a new provision at § ____.116(h)(1) that would require that a copy of the final version of the consent form (absent any signatures) for each clinical trial conducted or supported by a Common Rule department or agency be posted on a publicly available federal Web site that will be established as a repository for such consent forms. The name of the protocol and contact information would be required to be included with the submission of the consent form. The primary purpose of this provision is to improve the quality of consent forms in federally funded research by assuring that—contrary to current practices, under which it is often very difficult to ever obtain a copy of these documents—they eventually would become subject to public scrutiny. It is anticipated that the Web site will be searchable.

Under proposed § ____.116(h)(2), the consent form must be published on the Web site within 60 days after the trial is closed for recruitment. By final consent form, it is anticipated that investigators generally will post the version of the consent form that had been most recently approved by an IRB. Note that even though a newer consent form could be developed after the timeframe specified here, investigators would only be required to post one consent form. Thus, even if a modification to a consent form occurs after it has been posted, investigators would not be required to re-post an updated document. Moreover, only one posting would be required for each multi-site study. There is no expectation that a version would need to be posted for each study site.

A Web site would be developed by HHS, which could be used by other Federal departments or agencies, or the other Federal departments or agencies could create their own Web sites for the posting of these consent forms.

c. What would change?

- A new provision at § ____.116(h) would require that, for clinical trials conducted or supported by a Common Rule department or agency, a copy of the final version of a consent form would have to be posted on a publicly available federal Web site within 60 days after the trial is closed for recruitment.

C. Proposed Changes To Protect Information and Biospecimens (NPRM at § ____.105)

1. NPRM Goal

IRBs were not designed to evaluate risks to privacy and confidentiality, and often have little expertise in these matters. Setting uniform specific standards will help to assure appropriate privacy and confidentiality protections to all subjects, without the administrative burden of needing a specific committee review of the privacy and confidentiality protections of each study.

Increasing research use of genetic information, information obtained from biospecimens, and the ability to more easily merge multiple sources of administrative and survey datasets (*e.g.,* medical records, claims data, vital records, and information about lifestyle behaviors from surveys) have increased the stakes associated with data breaches. For example, the unauthorized release or use of information about subjects such as the disclosure of Social Security or Medicare numbers may pose financial risks, and disclosure of illegal behavior, substance abuse, or chronic illness might jeopardize subjects' current or future employment, or cause emotional or social harm. The risks of a large portion of social and behavioral research are also generally informational risks.

The goal of the NPRM here is to create information privacy protections that would apply to research, calibrated to the level of identifiability and sensitivity of the information being collected.

2. Current Rule and Other Regulatory or Statutory Requirements

Currently, the Common Rule at § ____.111(a)(7) requires that IRBs evaluate each study with regard to all levels of risk and are expected to determine whether the privacy of subjects and the confidentiality of their information are protected. Under the Common Rule, IRBs must review each individual study's protection plan to determine whether it is adequate with respect to the informational risks of that study.

In addition, the HIPAA Privacy Rule addresses some of these informational risks by imposing restrictions on how individually identifiable health information collected by health plans, health care clearinghouses, and most health care providers (''covered entities'') may be used and disclosed, including for research. In addition, the HIPAA Security Rule (45 CFR parts 160 and 164, Subparts A and C) requires that these entities implement certain administrative, physical, and technical safeguards to protect this information when in electronic form from unauthorized use or disclosure. However, the HIPAA Rules apply only to covered entities (and in certain respects to their business associates), and not all investigators are part of a covered entity. Moreover, the Privacy Rule does not apply specifically to biospecimens in and of themselves.

Separate from the HIPAA Rules, the Privacy Act of 1974, as amended (5 U.S.C. 552a) requires Federal agencies to protect certain information in their possession and control. However, it does not apply to non-Federal investigators.

3. ANPRM Discussion

The ANPRM suggested establishment of mandatory data security and information protection standards for all studies that involve the collection, generation, storage, or use of identifiable or potentially identifiable information that might exist electronically or in paper form or contained in a biospecimen. It put forward the idea that these standards might be modeled after certain standards of the HIPAA Rules and asked a series of questions about how best to protect private information.

4. NPRM Proposals

Some public comments reflected confusion about the focus of the suggested standards and whether they would apply to information or biospecimens that were not individually identifiable. Although most commenters confirmed the need to protect the privacy and confidentiality of information of human subjects in research, a majority expressed serious concerns about the merits of requiring all investigators to meet standards modeled on certain HIPAA standards, such as those in the HIPAA Security Rule. Most commenters expressed the opinion that certain HIPAA standards are not well suited to some research of various kinds carried out by investigators not subject to the HIPAA Rules. Some commenters claimed that the HIPAA privacy safeguards do not adequately protect individuals' information. Many commenters claimed that standards modeled after certain HIPAA standards would be unnecessarily burdensome for studies in the behavioral and social sciences where the data are often less sensitive than health information.

Some comments maintained that HIPAA-like standards would not always be suitable for the variety of research methods and procedures for the collection and storage of information in research activities not subject to the HIPAA Rules. Some commented that certain HIPAA standards would not be suitable because of the location of the research activity, or because the kind of institution supporting the research was significantly different from a covered entity. Others thought the HIPAA standards create confusion and complications for investigators and institutions that would increase if standards modeled on certain HIPAA standards were applied across the board. At the same time, regardless of the specific standards to be employed under this approach, several commenters noted that the additional administrative burden that might be created by establishing a data security and information protection system could be offset by the decreased time and attention IRBs would have to invest in reviewing every study that required data or biospecimen protections. They also noted that many institutions already have required data and biospecimen protection systems in place.

Some commenters noted that expansion of some of the exemption categories could only be ethically acceptable if those research activities were subject to a requirement for data security and information protection, because information collected for some research studies would no longer be collected under a research plan approved by an IRB. With regard to an absolute prohibition against re-identifying de-identified data, many commenters expressed concern, and provided reasons why re-identification might be valid or even desirable, including the need to return clinically relevant research results to an individual. For example, if the research uncovers information that might have important clinical significance for an individual, re-identification could be used so that the individual could get care. In addition, they pointed out that the current Common Rule requires investigators who re-identify non-identified private information as part of a research study to comply with the current Common Rule regulatory requirements.

The NPRM proposes to require that investigators and institutions conducting research subject to the Common Rule implement reasonable safeguards for protecting against risks to the security or integrity of biospecimens or identifiable private information. Given the significant concerns of public commenters about the idea discussed in the ANPRM of adopting the standards solely modeled on certain standards of the HIPAA Rules, the NPRM proposes several sets of standards, and allows a choice about which to use. First, the NPRM proposes to have the Secretary of HHS publish a list of specific measures that an institution or investigator can use to meet the requirements. The list would be evaluated and amended, as appropriate, after consultation with other Common Rule departments and agencies. The proposed list will be published in the **Federal Register**, and public comment on the proposed list will be sought before the list is finalized.

The list of specific safeguards that would be identified by the Secretary will be designed such that they could be readily implemented by the individual investigator, could build on existing safeguards already in place to protect research data, and would involve minimal cost and effort to implement. These standards would include security safeguards to assure that access to physical biospecimens or data is limited only to those who need access for research purposes. These standards would also assure that access to electronic information is only authorized for appropriate use. Finally, these safeguards would assure that information and biospecimens posing informational risks to subjects would be protected according to appropriate standards.

Second, if an institution or investigator is currently required to comply with the HIPAA rules, then the safeguards required by the Common Rule would be satisfied. No additional requirements are proposed to protect information that is subject to the HIPAA Rules. The NPRM also proposes to clarify at § ____.105(d) that the provisions at § ____.105 do not amend or repeal the requirements of 45 CFR parts 160 and 164 for the institutions or investigators to which these regulations apply pursuant to 45 CFR 160.102. Institutions or investigators that are not required to follow HIPAA could voluntarily implement the HIPAA Rules and be considered to satisfy the § ____.105 privacy protections requirements. For Federal departments and agencies that conduct research activities that are or will be maintained on information technology that is subject to and in compliance with section 208(b) of the E-Government Act of 2002, 44 U.S.C. 3501 note, if all of the information collected, used, or generated as part of the activity will be maintained in systems of records subject to the Privacy Act of 1974, 5 U.S.C. 552a, and the research will involve a collection of information subject to the Paperwork Reduction Act of 1995, 44 U.S.C. 3501 *et seq.*, the requirements of § ____.105 will be deemed satisfied.

For the purposes of informing the development of the § ____.105 privacy safeguards, comment is sought on what types of safeguards would be appropriate.

There are additional statutes or acts that mandate the protection of privacy and confidentiality of identifiable private information that may be reasonable to include in § ____.105(b) as additional standards which, if research is already subject to those standards or a voluntarily election to comply with them is made, should perhaps be viewed as meeting the new requirement. These include:

- The Confidential Information Protection and Statistical Efficiency Act, 44 U.S.C. 3501 note;
- The Family Educational Rights and Privacy Act of 1974, 20 U.S.C. 1232g;
- The Census Act, 13 U.S.C. 1 *et seq.;*
- Agency for Healthcare Research & Quality (AHRQ) statutory provision protecting the confidentiality of identifiable data obtained for research purposes by AHRQ or its contractors and grantees, 42 U.S.C. 299c–3(c);
- The CDC National Center for Health Statistics (NCHS) statutory confidentiality provision at Section 308(d) of the Public Health Service Act,

42 U.S.C. 242m(d) (using nearly identical language to the AHRQ statutory provision referenced above);

- The Substance Abuse and Mental Health Services Administration authorizing statute regarding confidentiality of alcohol and drug abuse patient records at 42 U.S.C. 290dd–2;
- The Department of Justice statute related to confidentiality of information used by the Office of Justice Programs at 42 U.S.C. 3789g;
- The Department of Education statute related to Education Sciences Reform at 20 U.S.C. 9573.

Public comment is sought on whether any of the above referenced statutes or acts would serve the goals of § ____.105. Note that the statutes and acts referenced in § ____.105(b) are currently referenced in the proposed exclusions at § ____.101(b)(2)(i) (exclusion for surveys, educational tests, and public observation) and § ____.101(b)(2)(iii) (exclusion for federal departments or agencies to use pre-existing federally generated non-research data). To that end, public comment is also sought as to whether the goals of the NPRM are served by referencing any of the aforementioned statutes, acts, or standards in the exclusions proposed in § ____.101(b)(2)(i) and (iii).

In order to reduce burden on IRBs that may under the current regulation be tasked with ensuring that safeguards are commensurate with informational risk, IRB review of required safeguards generally would not be required. Note that while the proposed language at § ____.111(a)(7) requires that IRBs consider if the privacy safeguards at § ____.105 are sufficient to protect the privacy of subjects and the confidentiality of data, the presumption would be that these privacy safeguards are sufficient in most circumstances.

The new section includes conditions for use and disclosure of research information to other entities, consistent with those protections to participants in research conducted by Federal employees and their contractors. It requires that protections be in place when biospecimens or identifiable private information are shared for appropriate research or other purposes as specified in the rule. Unless required by law, the NPRM would limit the re-disclosure of biospecimens and identifiable private information that were obtained for research purposes to the following four purposes: (1) For human subjects research regulated under the Common Rule; (2) for public health purposes; (3) for any lawful purpose with the consent of the subject; or (4) for other research purposes if the institution or investigator has obtained adequate assurances that: The recipient investigator will implement and maintain the level of safeguards required by this provision, and the research has been approved by an IRB under § ____.111 (except for human subjects research that qualifies for exclusion under proposed § ____.101(b) or exemption under proposed § ____.104 and the recipient will not further disclose the biospecimens or identifiable private information except as permitted by this provision (NPRM at § ____.105(c)).

These four purposes are additional uses or disclosures of biospecimens or identifiable private information collected in research, because the subjects themselves consented, or because the information and biospecimens will continue to be safeguarded, or because the public health will be served. For the purposes of this requirement, an institution or investigator must obtain adequate assurances through the use of a written agreement with the recipient of the biospecimens or identifiable private information that the recipient will abide by these conditions. In developing this provision, Common Rule departments and agencies discussed whether it was appropriate to limit the re-disclosure of biospecimens and identifiable private information ''unless [such a disclosure was] required by law'' or if some other standard (such as ''unless [such a disclosure was] authorized by law'') would be appropriate. Public comment is sought on whether limiting re-disclosure to four specific circumstances unless such a disclosure was ''required by law'' is too restrictive, or whether more permissive standards would better facilitate the NPRM goal of fostering the secondary research use of information.

Also, research involving the collection and use of biospecimens or identifiable private information that would qualify for an exemption under section § ____.104(e) and (f) must conform to the privacy safeguards proposed in § ____.105. A proposed change also appears at § ____.115(c), requiring that IRB records that contain identifiable private information also be safeguarded through compliance with the safeguards proposed at § ____.105.

In addition to ensuring that biospecimens and identifiable private information are protected, a benefit of this new provision is that IRBs would not be required to review the individual plans for safeguarding information and biospecimens for each research study, so long as investigators will adhere to them. While there is a presumption that the proposed § ____.105 privacy safeguards are sufficient, an IRB may determine that a particular activity requires more than what is discussed in § ____.105. Once IRBs are familiar with standard institutional and investigator adopted protections, it is anticipated that they will become more comfortable with the fact that they need not review every protocol for privacy safeguards. In addition, there will be an overall reduction in regulatory burden because IRBs will not have to review security provisions on a case-by-case basis.

Finally, the proposed exemptions found at § ____.104(e) and (f), which will permit a larger number of protocols to proceed without IRB review if specific conditions are met, are conditioned on investigators and institutions meeting these privacy and security requirements. Note that there is currently no requirement for an IRB to determine whether investigators are adhering to the § ____.105 privacy safeguards for research exempted under § ____.104(e) or (f).

5. What would change?

- The NPRM would create a set of standards for the protection of information for research to create an effective and efficient means of implementing appropriate protections for information and biospecimens.
- The NPRM also proposes to include limitations for the use and disclosure of information and biospecimens.
- IRBs would be required to safeguard their records in compliance with the provisions at § ____.105 if the records contain identifiable private information.

6. Questions for Public Comment

71. Public comment is sought regarding whether particular information security measures should be required for certain types of information or research activities and, if so, what measures and for what types of information or research. Specifically, should the safeguards be calibrated to the sensitivity of the information to be collected?

72. Are the proposed limitations on re-disclosure more or less restrictive than necessary? Are there additional purposes for which re-disclosure of biospecimens or identifiable private information should be permitted?

D. Harmonization of Agency Guidance (NPRM at § ____.101(j))

1. NPRM Goal

From the outset of the development of the Common Rule, the importance of consistency across the Federal Government has been recognized. Each

Common Rule department or agency may issue its own guidance regarding the protection of human subjects. Consequently, there may be variations in the guidance issued.

As the label of the Common Rule suggests, there seems to be a compelling case for consistency across Federal departments and agencies regarding guidance on the protections of human subjects. Nevertheless, there are arguments in favor of some departments or agencies imposing specific requirements, apart from the Common Rule, that are tailored to certain types of research. The various agencies that oversee the protection of human subjects range from regulatory agencies, to those agencies and departments that conduct research, and to those that support and sponsor research. In addition, in some cases, statutory differences among the agencies have resulted in different regulatory requirements and agency guidance. Not only do the agencies have different relationships to the research, but they also oversee very different types and phases of research and thus there may be reasonable justifications for differences in guidance. Moreover, achieving consensus across the entire Federal Government may be arduous, preventing timely issuance of guidance.

2. Current Rule

Each Common Rule agency, and the FDA, is authorized to issue its own guidance with regard to interpreting and implementing the regulations protecting human subjects. That guidance may substantially differ from agency to agency.

Currently, there are multiple efforts to address variation in guidance across the Federal Government, but there is no regulatory requirement for agencies to consult other departments prior to issuance of a policy, to the extent appropriate. As a result, inter-departmental communication is at times uneven, leading to potentially avoidable inconsistencies. The Common Rule departments and agencies have procedures for sharing proposed guidance before it is adopted, and these procedures have generally been successful. Additionally, FDA and OHRP have been working closely to ensure harmonization of guidance and regulation to the extent possible, given the differing statutory authorities and regulatory missions.

3. ANPRM Discussion

The ANPRM did not suggest any specific approaches to harmonization but asked for public comment on a set of questions focused on: (1) The extent to which differences in guidance on research protections from different agencies strengthen or weaken protections for human subjects; (2) the extent to which differences in guidance on research protections from different agencies facilitate or inhibit the conduct of research domestically and internationally; and (3) the desirability of all Common Rule agencies issuing one set of guidance.

4. NPRM Proposal

Responses to questions in the 2011 ANPRM about the need for harmonization across Common Rule agencies reflected widespread support for such efforts. Several commenters acknowledged the difficulty of getting all Common Rule agencies to agree on all issues, as each has a different mission and research portfolio. However, they encouraged seeking harmonized guidance whenever possible.

Thus, the NPRM proposes that the regulations contain language at § ____.101(j) requiring consultation among the Common Rule agencies for the purpose of harmonization of guidance, to the extent appropriate, before federal guidance on the Common Rule is issued, unless such consultation is not feasible.

The Department believes this proposal appropriately recognizes the importance of harmonized guidance by creating an expectation that guidance should only be issued after consultation among the Common Rule agencies, while also permitting guidance to be issued without such consultation when it is not feasible. The proposal also recognizes that harmonization will not always be possible or desirable given the varied missions of the agencies that oversee the protection of human subjects and differences in statutory authorities. Although the NPRM proposal is limited to requiring consultation for the purpose of harmonization, the Common Rule agencies may wish to consult with one another before issuing guidance for reasons other than the purpose of harmonization, and the proposal would not preclude this. Some concerns have been expressed that the proposed language in § ____.101(j) does not go far enough to mandate harmonization in guidance between Common Rule agencies. Others are concerned that this provision would, in effect, mean that Common Rule agencies issue fewer guidance documents because of lengthy internal government review and approval processes. Public comment is sought about the effectiveness of the consultation language proposed in § ____.101(j), and whether this language should require more (or less) than consultation amongst Common Rule agencies before guidance is issued.

For example, FDA intends to modify its regulations in light of this NPRM, to the extent appropriate, considering its unique statutory framework and regulatory mission. In developing guidance that interprets its human subject protection regulations that mirror the requirements found in the Common Rule, FDA may seek consultation with the Common Rule agencies, to the extent feasible. Further, FDA and OHRP will continue to work together in developing guidance on their respective regulatory requirements that are found both in FDA regulations and in the Common Rule, to the extent feasible.

5. What would change?

- The regulations would contain language at § ____.101(j) requiring consultation among the Common Rule agencies for the purpose of harmonization of guidance, to the extent appropriate, before federal guidance on the Common Rule is issued, unless such consultation is not feasible.

6. Question for Public Comment

73. Will the proposed language at § ____.101(j) be effective in achieving greater harmonization of agency guidance, and if not, how should it be modified?

E. Cooperative Research (NPRM and Current Rule at § ____.114) and Proposal To Cover Unaffiliated IRBs Not Operated by an Institution Holding a Federalwide Assurance (NPRM at § ____.101(a))

1. NPRM Goal

The goal is to enhance and streamline the review process, reduce inefficiencies, and hold unaffiliated IRBs directly accountable for regulatory compliance, without compromising ethical principles and protections.

2. Current Rule

Currently, an institution engaged in non-exempt human subjects research conducted or supported by any Federal department or agency that has adopted the Common Rule is required to hold an OHRP-approved FWA or another assurance of compliance approved by the Federal department or agency conducting or supporting the research. The FWA mandates the application of the Common Rule only to certain federally funded research projects. Most institutions voluntarily extend the applicability of the Common Rule to all the research conducted at their

institutions, even research not conducted or supported by one of the federal departments or agencies that have adopted the Common Rule.[64] However, such extensions are not required. Many observers have called for legislation that would extend the Common Rule protections to all research with human subjects conducted in the United States, regardless of funding source.

In addition, IRBs not affiliated with an institution holding an FWA are not directly subject to oversight for compliance through the vehicle of the FWA. OHRP's current practice of enforcing compliance with the Common Rule in situations where an institution relies on an external IRB is through the institutions that are engaged in human subjects research, even in circumstances when the regulatory violation is directly related to the responsibilities of an external IRB. Thus, certain aspects of the regulations are not directly applied to external IRBs.

External IRB review of cooperative research may be problematic given the current lack of direct regulatory accountability and the large volume of cooperative reviews. The inefficiencies of multiple IRB reviews for cooperative studies adds bureaucratic complexity to the review process, and delays initiation of research projects without evidence that multiple reviews provide additional protections to subjects.

The Common Rule currently requires that each institution engaged in a cooperative research study obtain IRB approval of the study, although it does not require that a separate local IRB at each institution conduct such review. In many cases, however, a local IRB for each institution does independently review the research protocol, informed consent forms and other materials, sometimes resulting in hundreds of reviews for one study. When any one of these IRBs requires changes to the research protocol that are adopted for the entire study, investigators must re-submit the revised protocol to all of the reviewing IRBs. This process can take many months and can significantly delay the initiation of research projects and recruitment of subjects into studies.

In 2006, the FDA issued guidance intended to assist sponsors, institutions, IRBs, and clinical investigators by facilitating the use of a centralized IRB review process in cooperative clinical trials of investigational new drugs.[65]

Currently, the choice to have cooperative research reviewed by a central IRB, or by an IRB at another institution, is voluntary under the Common Rule. In practice, most institutions have been reluctant to replace review by their local IRBs with review by a central IRB.

3. Relevant Prior Proposals and Discussions

The choice to have cooperative research reviewed by a single unaffiliated IRB (or by an external IRB operated by or affiliated with another FWA-holding institution) currently is voluntary. In practice, most institutions have been reluctant to replace review by their local IRBs with review by a single IRB. Participants in two meetings on alternative IRB models co-sponsored by OHRP in November 2005 and November 2006 indicated that one of the key factors influencing institutions' decisions about this issue is OHRP's current practice of enforcing compliance with the Common Rule through the institutions that were engaged in human subjects research,[66] even in circumstances when the regulatory violation is directly related to the responsibilities of an external IRB.

In 2009, OHRP issued an ANPRM in the **Federal Register** requesting information and comments from the public about whether the office should pursue a notice of proposed rulemaking to enable OHRP to hold IRBs and the institutions or organizations operating the IRBs directly accountable for meeting certain regulatory requirements of the Common Rule.[67] OHRP contemplated this regulatory change to encourage institutions to rely on IRBs that are operated by another institution or organization, when appropriate. In this ANPRM, OHRP stated that it believed that such a regulatory change in its enforcement authority might address one of the main disincentives institutions have cited as inhibiting them from exercising the regulatory flexibility that currently permits institutions to implement a variety of cooperative review arrangements and to rely on the review of an IRB operated by another institution or organization. If institutions become more willing to rely on cooperative review arrangements and on review of IRBs operated by other institutions or organizations, this could reduce administrative burdens associated with implementing the Common Rule without diminishing human subject protections.

The ANPRM sought public comment on the feasibility, advantages, and disadvantages of mandating that all domestic (United States) sites in a study involving more than one institution rely on a single IRB for that study. This would apply regardless of whether the study underwent convened review or expedited review. Further, it would only affect which IRB would be designated as the reviewing IRB for institutional compliance with the IRB review requirements of the Common Rule. It would not relieve any site of its other obligations under the regulations to protect human subjects. Nor would it prohibit institutions from choosing, for their own purposes, to conduct additional internal ethics reviews, though such reviews would no longer have any regulatory status in terms of compliance with the Common Rule.

Based on public comments received to the 2009 ANPRM[68] on the issue of IRB accountability and to address institutions' concerns about OHRP's practice of enforcing compliance with the Common Rule through the institutions that are engaged in human subjects research, the 2011 ANRPM also suggested that appropriate accompanying changes could be made in enforcement procedures to hold external IRBs directly accountable for compliance with certain regulatory requirements.[69] This change was discussed only for United States sites in multi-institutional studies. The ANPRM suggested that, in most cases, independent local IRB reviews of international sites are appropriate because it might be difficult for an IRB in the U.S. to adequately evaluate local conditions in a foreign country that could play an important role in the ethical evaluation of the study.

[64] According to the OHRP's FWA Database, twenty-five percent of institutions with an active FWA have formally extended the Common Rule to all research conducted at those institutions, regardless of funding source (by ''checking the box'' on their assurance). Comments from the regulated community suggest that most institutions, however, voluntarily follow the requirements of the Common Rule in all research activities conducted at these institutions.

[65] See FDA Guidance at: Guidance for Industry: Using a Centralized IRB Review Process in Multicenter Clinical Trials. (2006, March). Retrieved from U.S. Food and Drug Administration: *http://www.fda.gov/downloads/RegulatoryInformation/Guidances/UCM127013.pdf.*

[66] In general, an institution is considered *engaged* in a particular non-exempt human subjects research project when its employees or agents for the purposes of the research project obtain: (1) Data about the subjects of the research through intervention or interaction with them; (2) identifiable private information about the subjects of the research; or (3) the informed consent of human subjects for the research. Office for Human Research Protections. (2008, October 16). Guidance on Engagement of Institutions in Human Subjects Research. Retrieved from Policy & Guidance: *http://www.hhs.gov/ohrp/policy/engage08.htmll.*

[67] 74 FR 9568 (Mar. 5, 2009).

[68] 74 FR 9578 (Mar. 5, 2009).

[69] 74 FR 9578 (Mar. 5, 2009). Also available at *http://www.hhs.gov/ohrp/newsroom/rfc/com030509.html.*

In late 2014, NIH issued a Request for Comments on the Draft NIH Policy on the Use of a Single Institutional Review Board for Multisite Research. The response to NIH's proposed policy was robust and largely supportive, with many institutions citing both reduced duplication of effort and faster initiation of research as important factors. A minority, however, pointed to the importance of maintaining independent local IRB review, and expressed doubt over the anticipated efficiencies and cost savings that would be incurred through a centralized model. SACHRP commented on this draft policy, and was generally supportive of voluntary increased use of a single IRB for multi-site studies, as such use may decrease differences among site implementation of protocols. SACHRP concluded that a uniform mandate of single IRB review for all domestic multi-site studies was premature, and recommended a more incentivized approach at this time.[70]

4. NPRM Proposals

These issues attracted a large number of comments to the 2011 ANPRM, and revealed nearly evenly divided perspectives. Investigators and disease advocacy groups tended to favor the single IRB review requirement. IRB and institutional representatives tended to be opposed to the possible requirement, though many indicated single IRB review should be encouraged. Support was especially strong for single IRB review for cooperative clinical trials for which the evaluation of a study's social value, scientific validity, and risks and benefits, and the adequacy of the informed consent form and process generally do not require the unique perspective of a local IRB. Moreover, depending on the nature of the study, FDA may not permit differences in protocols across sites, which further bolstered commenters' views that the requirements be harmonized across the Common Rule and FDA requirements. Commenters reported incidences of IRBs continuously second-guessing each other, which delayed studies to the point that subject recruitment opportunities were foregone or lost. This problem seemed especially critical in studies of rare diseases and cancers, which nearly always involve multiple research sites.

Support for the use of a single IRB, however, was not restricted to clinical trials. Several commenters cited long delays and burdensome requirements resulting from multiple reviews of studies in the behavioral and social sciences. In addition to the view that these administrative requirements do not enhance protections, supporters of a single IRB review of cooperative studies cited the frequent need for maintaining consistency across sites, which can be degraded by multiple reviews.

Despite support for the ANPRM suggestion, several commenters expressed concern about making such a provision mandatory, stating that the current regulations at § ____.114 permit the use of joint review arrangements for cooperative research. They noted that although this option exists, institutions might be hesitant to use it because of liability concerns and the unwillingness of institutions or IRBs to rely on the judgment of other institutions or IRBs. However, several commenters expressed concern about signaling the acceptability of a single IRB for review while allowing institutions to continue to conduct their own ethics review, fearing that such a policy would not correct the current situation, which tends to favor multiple reviews. Thus, they commented that mandating a single IRB might be the only way to achieve the goals of streamlining review while ensuring protections.

Another issue raised was the need to set clearer expectations of the responsibilities of local IRBs that are not designated as the central IRB. A number of commenters supporting the requirement for a central IRB also requested that OHRP issue guidance on how to select the IRB, responsibilities of all parties, and compliance and enforcement policies. Several commenters also requested that OHRP develop a template for reliance agreements to replace inter-institutional agreements currently in use.

Those who expressed concern about the use of a single IRB said some studies, especially in the behavioral and social sciences, might involve significant contextual issues reflecting community norms, standards, and practices, or local culture and customs. Use of a distant IRB might not consider and best protect subjects based on community norms. Others noted that such concerns can be addressed by investigators or IRBs submitting ''points to consider'' regarding significant contextual or cultural considerations of relevance to their site.

A primary issue posed by those opposed to mandating use of a single IRB in cooperative studies focused on potential loss of accountability and increased liability for the institutions where the research is conducted but where the reviewing IRB is not located.

Taking into consideration this public debate and various sources of public comments, the NPRM proposes a requirement at § ____.114(b)(1) mandating that all institutions located in the United States engaged in cooperative research rely on a single IRB as their reviewing IRB for that study. Under proposed § ____.114(b)(2), this requirement would not apply to: (1) Cooperative research for which more than single IRB review is required by law (*e.g.,* FDA-regulated devices); or (2) research for which the Federal department or agency supporting or conducting the research determines and documents that the use of a single IRB is not appropriate for the particular study.

Based on comments to OHRP's 2011 ANPRM, the NPRM also proposes to add a new provision at § ____.101(a) that would explicitly give Common Rule departments and agencies the authority to enforce compliance directly against unaffiliated IRBs that are not operated by an assured institution. This change is proposed to address concerns about OHRP's current practice of enforcing compliance with the Common Rule through the institutions that are engaged in human subjects research, even in circumstances when the regulatory violation is directly related to the responsibilities of an external IRB. In large part, this change was made to facilitate the use of a single IRB in cooperative research, allowing OHRP to enforce compliance with the Common Rule through non-compliant external IRBs rather than the institutions that were engaged in human subjects research. This proposal should encourage institutions to be more willing to rely on a single IRB for cooperative research as required under the NPRM proposal at § ____.114. It would reassure institutions using an external IRB because compliance actions could be taken directly against the IRB responsible for the flawed review, rather than the institutions that relied on that review.

Some public commenters responding to the 2011 ANPRM cautioned that extending compliance oversight to external IRBs might serve as a disincentive for some IRBs to be the IRB of record for cooperative research. A majority of commenters expressed an opposing view; that is, holding external IRBs directly accountable for compliance with the regulations would increase the comfort level of institutions in accepting the regulatory review of an external IRB.

[70] Secretary's Advisory Committee on Human Research Protections. (2015). Recommendations Regarding the Draft NIH Policy on the Use of a Single Institutional Review Board for Multi-site Research. Retrieved from Office for Human Research Protections: *http://www.hhs.gov/ohrp/sachrp/commsec/useofasingle_irb.html.*

Related to this issue is a new provision proposed at § ____.103(e) regarding policies for documenting an institution's reliance on an external IRB. That provision states that for non-exempt research involving human subjects covered by this policy that takes place at an institution in which IRB oversight is conducted by an IRB that is not affiliated with the institution, the institution and the IRB should establish and follow written procedures identifying the compliance responsibilities of each entity. These procedures should be set forth in an agreement between the institution and the IRB specifying the responsibilities of each entity in ensuring compliance with the requirements of this policy.

This would only apply to U.S.-conducted portions of studies because the flexibility to make use of external local IRB reviews of international sites should be maintained; it might be difficult for an IRB in the United States to adequately evaluate local conditions in a foreign country that could play an important role in the ethical evaluation of the study.

This policy would apply regardless of whether the study underwent convened review or expedited review. This proposal only affects the decision regarding how an IRB would be designated as the reviewing IRB for institutional compliance with the IRB review requirements of the Common Rule. The reviewing IRB is expected to be selected either by the funding agency or, if there is no funding agency, by the lead institution conducting the study. An agency may solicit input regarding which IRB would be most appropriate to designate as the IRB of record. Public comment is sought on how this will work in practice.

This policy would not relieve any site of its other obligations under the regulations to protect human subjects. Nor would it prohibit institutions from choosing, for their own purposes, to conduct additional internal IRB reviews, though such reviews would no longer have any regulatory status in terms of compliance with the Common Rule. Although a local IRB may conduct its own additional internal review, such a review would not be binding on the local site if not adopted by the single IRB, and the terms of it would not be enforced by OHRP.

Relevant local contextual issues (*e.g.,* investigator competence, site suitability) pertinent to most studies can be addressed through mechanisms other than local IRB review. For research where local perspectives might be distinctly important (*e.g.,* in relation to certain kinds of vulnerable populations targeted for recruitment), local IRB review could be limited to such consideration(s); but again, IRB review is not the only mechanism for addressing such issues. The evaluation of a study's social value, scientific validity, and risks and benefits, and the adequacy of the informed consent form and process generally do not require the unique perspective of a local IRB.

The proposal also modifies the current regulations by removing the requirement that only with the approval of the department or agency head may an institution participating in a cooperative project enter into a joint review arrangement, rely upon the review of another IRB, or make similar arrangements for avoiding duplication of effort. Such approval is no longer required.

Some detractors of mandated single IRB review for cooperative research point to concerns regarding implementation logistics, and the time necessary to establish new policies, procedures, and agreements; recognizing this concern, the proposed compliance date is three years from the publication of the final rule.

5. What would change?

- IRBs not affiliated with an assured institution that review research covered by the Common Rule would be subject to direct compliance oversight regarding IRB regulatory requirements.
- All U.S. institutions engaged in a cooperative study would rely upon a single IRB for that study, with some exceptions.

6. Questions for Public Comment

74. Is mandated single IRB review for all cooperative research a realistic option at this time? Please provide information about the likely costs and benefits to institutions. Will additional resources be necessary to meet this requirement in the short term? Should savings be anticipated in the long run?

75. What areas of guidance would be needed for institutions to comply with this requirement? Is there something that OHRP could do to address concerns about institutional liability, such as the development of model written agreements?

76. Would it be useful for this requirement to include criteria that Federal departments or agencies would need to apply in determining whether to make exceptions to the use of a single IRB requirement? If so, what should these criteria be?

77. Are the exceptions proposed appropriate and sufficient, or should there be additional exceptions to this mandate for single IRB review than those proposed in the NPRM? If additional exceptions should be included, please provide a justification for each additional exception recommended.

78. Is three years appropriate timing to establish compliance with this provision?

F. Changes To Promote Effectiveness and Efficiency in IRB Operations

1. Continuing Review of Research (NPRM at § ____.109(f); Current Rule at § ____.109(e))

a. NPRM Goal

The goal is to reduce or eliminate the need for continuing review in specific circumstances, thereby reducing regulatory burden that does not meaningfully enhance protection of subjects.

b. Current Rule

The current regulations at § ____.109(e) require that IRBs conduct continuing review of research covered by this policy at intervals appropriate to the degree of risk, but not less than once per year. Except when an expedited review procedure is used, continuing review of research must occur at convened meetings at which a majority of the IRB members are present, including at least one member whose primary concerns are in nonscientific areas. In order for research undergoing continuing review to be approved, it must receive the approval of a majority of those members present at the meeting (§ ____.108(b)).

An IRB may use an expedited review procedure to conduct continuing review of research for some or all of the research appearing on the list of research eligible for expedited review [71] and found by the reviewer(s) to involve no more than minimal risk. OHRP may restrict, suspend, terminate, or choose not to authorize an IRB's use of the expedited review procedure (§ ____.110(d)).

c. ANPRM Discussion

The ANPRM requested comments on eliminating continuing review for all minimal risk studies that undergo expedited review, unless the reviewer explicitly justifies why continuing review would enhance protection of research subjects. For studies initially reviewed by a convened IRB, continuing review would not be required, unless

[71] See Office for Human Research Protections (OHRP)—Categories of Research That May Be Reviewed by the Institutional Review Board (IRB) through an Expedited Review Procedure. November 9, 1998, *http://www.hhs.gov/ohrp/policy/expedited98.html.*

specifically mandated by the IRB, after the study reaches the stage where procedures are limited to either (1) analyzing data (even if it is identifiable), or (2) accessing follow-up clinical data from procedures that subjects would undergo as part of standard care for their medical condition or disease.

d. NPRM Proposals

The NPRM proposes at § ____.109(f) eliminating continuing review for many minimal risk studies (namely those that qualify for expedited review), unless the reviewer documents why continuing review should take place (as would be required by § ____.115(a)(8)). Moreover, for studies initially reviewed by a convened IRB, continuing review would not be required, unless specifically mandated by the IRB, after the study reaches the stage where it involves one or both of the following: (1) Analyzing data (even if it is identifiable private information), or (2) accessing follow-up clinical data from procedures that subjects would undergo as part of standard care for their medical condition or disease.

In addition, continuing review would not be required for research involving certain secondary research using information and biospecimens that requires limited IRB review in order to qualify for exemption under § ____.104(f)(1).

Further, the NPRM proposes at § ____.109(f)(2) that an IRB must receive annual confirmation that such research is ongoing and that no changes have been made that would require the IRB to conduct continuing review (that is, the study still qualifies for expedited review because it still meets the criteria listed above and still involves no greater than minimal risk). This confirmation allows the IRB to administratively account for research that is occurring without continuing review. Investigators would continue to be required to submit changes to the protocol to the IRB. This requirement aims to address concerns some might have about institutional liability relating to the status of ongoing research, the possibility for increased noncompliance among investigators no longer required to ''check in,'' and possible breakdowns in lines of communications between investigators and IRBs. Institutions will have significant flexibility in how they implement this requirement. For example, some might rely on an automated electronic communication with the investigator at one-year intervals after the study was initiated that might merely require the investigator to type ''yes'' indicating that the study is ongoing and that no changes have been made. It is therefore anticipated that this requirement can be met with minimal time and effort on the part of investigators and IRBs. Investigators would still have the current obligations to report various developments (such as unanticipated problems or proposed changes to the study) to the IRB.

If an IRB chooses to conduct continuing review even when these conditions are met, the rationale for doing so must be documented according to a new provision at § ____.115(a)(8).

The NPRM, at § ____.115(a)(3), proposes a new requirement for IRBs to maintain records of continuing reviews. Because the NPRM proposes a new provision that eliminates the need for continuing review under specific circumstances (§ ____.109(f)(1)), the NPRM at § ____.115(a)(8) also proposes that IRBs need to justify the need for continuing review in cases where they will not follow the provision in § ____.109(f)(1).

e. What would change?

- Continuing review would be eliminated for all studies that undergo expedited review, unless the reviewer explicitly justifies why continuing review would enhance protection of research subjects. For studies initially reviewed by a convened IRB, once certain specified procedures are all that remain for the study, continuing review would not be required, unless specifically mandated by the IRB. However, investigators would be required to provide annual confirmation to the IRB that such research is ongoing and that no changes have been made that would require the IRB to conduct continuing review.
- Continuing review would not be required for research involving certain secondary research using information and biospecimens that requires limited IRB review in order to qualify for exemption under § ____.104(f)(1).

2. Expedited Review Procedures and the Definition of ''Minimal Risk'' (NPRM at §§ ____.110 and ____.102(j))

a. NPRM Goal

IRBs report challenges in assessing the level of risk presented by some studies in order to make the critical minimal risk determination. This is, in part, due to the difficulties in applying the current definition of minimal risk within the Common Rule, particularly because the terms ''ordinarily encountered in daily life'' and ''routine physical or psychological examinations'' are not clarified. The goal is to help eliminate this ambiguity as it pertains to expedited review, and improve the efficiency and consistency of minimal risk determinations for some activities.

b. Current Rule

The concept of ''minimal risk'' is central to numerous aspects of the Common Rule, the determination of which affects the type of review required, considerations for IRBs in the review process, and the frequency of review. In sum, the review process has been calibrated, for the most part, to the risk of the research.

The current definition of minimal risk at § ____.102(i) encompasses research activities where ''the probability and magnitude of harm or discomfort anticipated in the research are not greater in and of themselves than those ordinarily encountered in daily life or during the performance of routine physical or psychological examinations or tests.''

Under the Common Rule at § ____.110, a research study can receive expedited review if the research activities to be conducted appear on the list of activities published by the Secretary of HHS that are eligible for such review,[72] and is found by the reviewer(s) to involve no more than minimal risk. Under an expedited review procedure, the review may be carried out by the IRB chairperson or by one or more experienced reviewers designated by the chairperson from among the members of the IRB. Research that is eligible for expedited review requires continuing review at least annually.

c. ANPRM Discussion

The ANPRM suggested updating the current list of research activities eligible for expedited review; this list was last updated in 1998. It also considered mandating that a federal panel periodically (such as every year or every two years) review and update the list, based on a systematic, empirical assessment of the levels of risk. This would provide greater clarity about what would be considered to constitute minimal risk, and create a process that allows for routinely reassessing and updating the list of research activities that would qualify as minimal risk. The ANPRM asked for public comments on categories of research that should be considered for addition to the current list.

[72] *See* Office for Human Research Protections (OHRP)—Categories of Research That May Be Reviewed by the Institutional Review Board (IRB) through an Expedited Review Procedure. November 9, 1998, *http://www.hhs.gov/ohrp/policy/expedited98.html.*

The ANPRM asked for public comment on whether the current regulatory definition of minimal risk is appropriate. The ANPRM further suggested that the ''default'' assumption would be that a study otherwise eligible for expedited review will be considered minimal risk unless a reviewer documents the rationale for classifying the study as involving more than minimal risk.

Finally, the ANPRM discussed the idea that continuing review would not be required of studies that are eligible for expedited review unless the reviewer, at the time of initial review, determines that continuing review is required, and documents why. In follow-up to this discussion, the ANPRM asked for comments on whether IRBs should be required to report instances when they overrode the default presumption that research appearing on the posted list did not warrant review by a convened IRB.

d. NPRM Proposal

Based on public comments on the ANPRM, the NPRM proposes changes to the current regulatory language at § ____.110(b)(1) regarding expedited review, and will allow expedited review to occur for studies on the Secretary's list *unless* the reviewer(s) determine(s) that the study involves more than minimal risk. This is in contrast to the current regulations, which require that an IRB use the expedited review procedure only if the reviewer determines that the research involves no more than minimal risk; in addition, OHRP has indicated that the activities on the current list should not be deemed to be of minimal risk simply because they are included on the list. Therefore, this proposed change represents a change to the default position, and now says that research included on the list only involves minimal risk, unless the IRB makes a determination that the research is actually greater than minimal risk. Thus, it is anticipated that more studies that involve no more than minimal risk would undergo expedited review, rather than full review, which would relieve burden on IRBs.

This proposal is in line with public comment to the 2011 ANPRM. Commenters overwhelmingly welcomed the clarification that categories of research found on the published list should be presumed to be minimal risk. However, commenters were largely opposed to requiring IRBs to report instances when they conducted a review by the convened membership (versus an expedited review) for studies appearing on the list. They were opposed because of the additional administrative burden and also because they felt such a requirement would undermine the purview of local review and open IRBs up to second-guessing by OHRP.

Public comments to the 2011 ANPRM expressed both a desire to retain the current definition (slightly less than half) and a desire for changing it (slightly more than half). There were few common themes in the suggested changes to the language other than seeking clarification on what baselines an IRB should consider in determining the meaning of ''daily life'' and ''routine physical or psychological examinations.'' Several commenters acknowledged the difficulty of arriving at a concise definition for all circumstances. Those opposed to changing the definition said that IRBs generally understand how to interpret the language and that difficult or challenging application of the definition will persist regardless of the definition for those areas of research where risks are difficult to assess. Commenters recognized that the risks encountered in daily life can vary greatly depending on many factors, for example, where people live, what kind of work they are involved in, what their social and economic environment is, and their baseline health status. Thus, IRBs need to consider all of these issues in making a determination about the level of risk.

Thus, the NPRM does not propose to modify the definition of minimal risk (NPRM at § ____.102(j)), but rather proposes adding to the definition a requirement that the Secretary of HHS create and publish a list of activities that qualify as ''minimal risk.'' This Secretary's list will be re-evaluated periodically, but at least every 8 years, based on recommendations from federal departments and agencies and the public. Note that this will not be an exhaustive list of all activities that should be considered minimal risk under the Common Rule, but will allow IRBs to rely on the determination of minimal risk for activities appearing on the list. IRBs will still need to make minimal risk determinations about activities that do not appear on this list.

In addition, the NPRM proposes to eliminate the parenthetical phrase ''of one year or less'' at § ____.110(b)(2) since annual continuing review of research eligible for expedited review and research that progresses to the point of only involving specified limited activities will no longer be required for all ongoing human subjects research. The NPRM also proposes that the regulations be revised at § ____.110(a) to require evaluation of the list of expedited review categories every 8 years, followed by publication in the **Federal Register** and solicitation of public comment. A revised list will be prepared for public comment outside the scope of the NPRM.

For several reasons, the NPRM proposes no changes in the requirement that expedited review be conducted by an IRB member. First, public comments on the 2011 ANPRM were divided on the value of allowing a non-IRB member to conduct such reviews. Those with concerns questioned whether permitting someone other than an IRB member to conduct expedited review would have unintended consequences, such as either increasing or decreasing the number of studies deemed acceptable for expedited review, or by increasing liabilities for the institution. Second, IRB staff members would likely constitute the pool of non-IRB members qualified to conduct expedited review, and the current regulations permit IRB staff members to be IRB members. HHS does not believe a regulatory change is warranted to facilitate expedited review.

Finally, the NPRM contains a requirement at § ____.115(a)(9) that IRBs document the rationale for an expedited reviewer's determination that research appearing on the expedited review list is more than minimal risk (*i.e.,* an override of the presumption that studies on the Secretary's list are minimal risk). Such documentation could provide a basis for the Secretary's future determinations about the appropriateness of the list, and allow for greater internal consistency at institutions. In response to public comment on the 2011 ANPRM, the NPRM does not propose to require that institutions report such determinations directly to OHRP. Commenters were largely opposed to requiring IRBs to report instances when they conducted a review by the convened membership (versus an expedited review) for studies appearing on the list. They were opposed because of the additional administrative burden and also because they felt such a requirement would undermine the purview of local review and open IRBs up to second-guessing by OHRP.

e. What would change?

- Expedited review can occur for studies on the Secretary's list *unless* the reviewer(s) determine(s) that the study involves more than minimal risk.
- Evaluation of the list of expedited review categories would occur every 8 years, followed by publication in the **Federal Register** and solicitation of public comment.
- IRBs will be required to document their rationale when they override the presumption that studies on the

Secretary's expedited review list involve greater than minimal risk.

- The Secretary of HHS will create and publish and maintain a list of activities that should be considered minimal risk.

f. Questions for Public Comment

79. How often should the Secretary's list of minimal risk activities be updated? Should advice be solicited from outside parties when updating the list?

80. Is this Secretarial list of minimal research activities a useful tool for the research community, or does it represent a loss of IRB flexibility in risk determination?

G. Proposed Changes to IRB Operational Requirements

1. Proposed Criteria for IRB Approval of Research (NPRM at § ____.111)

a. NPRM Goals

These revisions modernize the rule by (1) creating new forms of IRB review for activities relating to storing or maintaining data and biospecimens for later secondary use, and for the review of studies involving certain types of such secondary use; (2) revising two of the existing criteria for approval of research, where there are special considerations related to the involvement of vulnerable populations and for privacy and confidentiality of data provisions; and (3) adding a provision regarding plans to review the return of individual results to participants.

b. Current Rule

There are several determinations that an IRB must generally make before it can approve a study, which are spelled out in current Common Rule at § ____.111. These relate, among other things, to minimizing risks to subjects, determining that there is an appropriate relationship between risks and benefits, and assuring the equitable selection of subjects. The regulations generally require all of these determinations to be made with regard to any study that must undergo IRB review.

c. ANPRM Discussion

The ANPRM asked whether all of the § ____.111 criteria should still be required for approval of studies that qualify for expedited review, and if not, which ones should not be required. Currently, before an IRB may approve a research study, including research that is being reviewed under an expedited procedure, the IRB must find that the criteria at § ____.111 have been met.

d. NPRM Proposals

Based on comment to the 2011 ANPRM, the NPRM does not propose to modify the § ____.111 criteria that apply to research reviewed under the expedited procedure versus research reviewed under full board review. The NPRM does however propose a number of changes regarding the criteria for IRB approval of research, including (1) creating a new form of IRB review for activities relating to storing or maintaining data and biospecimens for later secondary use; (2) revising two of the existing criteria for approval of research, where there are special considerations related to the involvement of vulnerable populations and for privacy and confidentiality of data provisions; and (3) adding a provision regarding plans to review the return of individual results to participants.

The first set of changes relates to updating the IRB review criteria for research activities relating to storing or maintaining information and biospecimens, and to the secondary use of such information and biospecimens. Paragraph (a)(9)(i) of proposed § ____.111 would apply to storage or maintenance for secondary research use of biospecimens or identifiable private information. This provision would eliminate the need for an IRB to make the usual determinations with regard to such an activity. Instead, the IRB would be required to determine that the procedures for obtaining broad consent to the storage or maintenance of the biospecimens or information were appropriate, and met the standards included in the introductory paragraph of § ____.116. In addition, if these storage and maintenance activities involved a change for research purposes from the way the biospecimens or information had been stored or maintained, then the IRB would have to determine that the biospecimen and privacy safeguards at § ____.105 are satisfied for the creation of any related storage database or repository. Note that in many instances there will be no such change. For example, an individual could sign a consent form allowing broad unspecified future research use of information contained in their medical records, and that information would remain where it is, but be tagged in some manner to indicate that the individual has provided such consent.

This in effect means that the default for such secondary research studies using either biospecimens or identifiable information will be that the initial broad consent would be sufficient, and that there will be no need to obtain a new consent from individuals for each specific research study that is conducted with the biospecimens and information.

The second proposal, relating to vulnerable subjects, is intended to address an inconsistency in the current regulations among three provisions in the current Common Rule that address requirements related to the consideration of vulnerable populations: §§ ____.107(a), ____.111(a)(3), and ____.111(b). Under the current Rule, only § ____.111(b) of these three provisions provides that vulnerability to coercion or undue influence is the type of vulnerability that should be considered. It is proposed that the criterion at § ____.111(a)(3) be revised to align with the language of § ____.111(b) to reflect that the vulnerability of the populations in these research studies should be considered to be a function of the possibility of coercion or undue influence, and that this vulnerability alone should be the IRB focus of concern with respect to this criterion. The proposed change is intended to provide greater consistency and clarity in IRB consideration of vulnerability of subject populations in research activities and appropriate protections. A comparable change is also proposed at § ____.107(a), pertaining to IRB membership. In addition, of these same three provisions in the current Rule, only § ____.107(a) identifies ''handicapped'' individuals (which the NPRM proposes be changed to ''physically disabled'' individuals as discussed below in section II.G.2.c. of the preamble) as a vulnerable category of subjects. Therefore, to enhance consistency and clarity among these three provisions, it is proposed that the term ''physically disabled'' be inserted at § ____.111(a)(3) and (b). This would mean that physically disabled persons would be among the individuals that the IRB may consider in determining that the selection of subjects is equitable (§ ____.111(a)(3)), and that the IRB may consider to be vulnerable to coercion or undue influence (§ ____.111(b)). Public comment is being sought on these proposed changes to the provisions related to vulnerable populations. Since it is proposed that the only vulnerability that needs to be considered is vulnerability to coercion or undue influence, and not other types of vulnerability, it is appropriate to review the subject populations to determine whether all of these subject populations identified in these three provisions should be considered vulnerable to coercion or undue influence. In particular, public comment is sought

about whether pregnant women and those with physical disabilities should be characterized as vulnerable to coercion or undue influence. Whether or not these subpopulations are considered vulnerable to coercion or undue influence would not affect the applicability of subpart B.

The third proposed change would be an addition of paragraph (a)(8) to § ____.111 clarifying that if an investigator submits as part of the protocol a plan for returning individual research results, the IRB will evaluate the appropriateness of the plan. IRBs need not determine *whether* there should be a plan for returning individual research results. Although many IRBs probably already review plans for return of results, many studies do not include this feature. Challenges can arise regarding return of individual research results when it is not clear if the findings have clinical validity or utility, or when the knowledge imparted may cause psychological distress or social harm. These issues have been the subject of frequent discussion, particularly regarding the Clinical Laboratory Improvement Amendments of 1988, 42 U.S.C. 263a.[73] [74] [75]

An additional change is related to the proposed changes at § ____.105, and would clarify that it is not an IRB responsibility to review the security plans for biospecimens and identifiable private information for every protocol (*i.e.,* on a case-by-case basis). It is assumed that once institutions and investigators have established policies and procedures for compliance with the new privacy safeguards at § ____.105 (and it is expected that many already have already such procedures in place), that IRBs will be confident in omitting that aspect of their review of research, as it does not pose unusual privacy or security risks to subjects. It is proposed that this requirement will be modified to recognize that the requirements at § ____.105 will apply to all non-excluded research (unless the criteria for exemptions are met). The default position should be that if the privacy safeguards at § ____.105 are being met, there is no need for additional IRB review of a research study's privacy and security protections. However, there might be extraordinary cases in which an IRB determines that privacy safeguards above and beyond those called for in § ____.105 are necessary. Therefore, it is proposed that IRBs will be responsible for ensuring there are adequate provisions to protect the privacy of subjects and to maintain the security of data only if the IRB determines that the protections required in § ____.105 are insufficient.

e. What would change?

- A new version of more limited IRB approval criteria would be created for activities relating to the storage or maintenance of biospecimens and identifiable private information for the purposes of later doing secondary research with them.
- IRBs considering the § ____.111(a)(3) approval criterion regarding equitable selection of subjects would need to focus on issues related to coercion or undue influence in research with vulnerable populations and not other considerations related to vulnerability.
- Physically disabled persons would be among the individuals that the IRB may consider in determining that the selection of subjects is equitable (§ ____.111(a)(3)), and that the IRB may consider to be vulnerable to coercion or undue influence (§ ____.111(b)).
- IRBs would need to consider the requirements for investigators to protect information, and biospecimens as a criterion for approval of research only if they find the protections under § ____.105 are not sufficiently protective.
- If a plan for returning research results is included as part of a protocol, IRBs would be required to determine whether the plan is appropriate. IRBs would not be required to determine whether such a plan is needed.

f. Questions for Public Comment

81. What should IRBs consider when reviewing the plans for returning research results, for example, what ethical, scientific, or clinical concerns?

82. Is the § ____.111(a)(3) and (b) focus on issues related to coercion or undue influence in research with vulnerable populations, and not other considerations related to vulnerability, appropriate? Note that this focus also appears in proposed § ____.107(a).

83. Should pregnant women and those with physical disabilities be included in the category of subpopulations that may be vulnerable to coercion or undue influence?

2. Proposed Revisions to IRB Operations, Functions, and Membership Requirements

a. NPRM Goal

The goal is to improve IRB operations and make relevant sections consistent with other areas of the NPRM.

b. Current Rule

The current Rule outlines IRB functions and operations at §§ ____.108 and ____.103, and membership requirements at § ____.107.

c. NPRM Proposals

The NPRM contains several proposals for changes in IRB operations, functions, and membership requirements. First, the requirements for recordkeeping by IRBs no longer appear in § ____.103 of the rule. They are now described in § ____.108(a)(2), (3), and (4).

Also as previously discussed, IRBs would be required to safeguard their records in compliance with the privacy protections described in proposed § ____.105 if the records contain individually identifiable information.

Finally, there are four changes to the IRB membership requirements at § ____.107(a). The first change is the elimination of the requirement that IRBs not consist entirely of individuals of one gender or profession. This provision is unnecessary, because the requirement that IRB membership reflect members of varying backgrounds and diversity, including gender, will accomplish the same effect. The deletion of this provision in the NPRM is not intended to alter the composition of IRBs from what had been established in the current Rule.

For the reasons discussed above in section II.G.1.d, three additional changes are proposed to § ____.107(a). It is proposed that § ____.107(a) be modified so that consideration of vulnerability of a subject population would be limited to vulnerability to coercion or undue influence. This proposed change is consistent with the proposal at § ____.111(a)(3). The proposed change is intended to result in greater consistency and clarity in IRB consideration of vulnerability of subject populations in research activities and appropriate protections.

The third change in § ____.107(a) is the insertion of ''economically or educationally disadvantaged persons'' as an example of a vulnerable population, requiring an IRB to give consideration to membership expertise in this area. This language is already included in the current Rule at § ____.111(a)(3) and § ____.111(b). Adding this category of individuals to

[73] Presidential Commission for the Study of Bioethical Issues. (2013, December). Anticipate and communicate: Ethical management of incidental and secondary findings in the clinical, research, and direct-to-consumer contexts. Retrieved from Presidential Commission for the Study of Bioethical Issues: *http://bioethics.gov/sites/default/files/FINALAnticipateCommunicate_PCSBI_0.pdf.*

[74] Wolf SM *et al.* Managing incidental findings in human subjects research: Analysis and recommendations. J Law Med Ethics 2008 Summer; 36(2):219–248, 211.

[75] Ofri D. 2013. Medicine's problem of 'incidental findings.' *Atlantic Monthly.*

those who may be considered vulnerable to coercion or undue influence at § ____.107(a) is intended to create greater consistency among these three provisions.

In order to modernize the regulatory language, the fourth change in proposed § ____.107(a) is the replacement of the term ''handicapped'' persons with ''physically disabled persons'' as an example of a vulnerable population, requiring an IRB to give consideration to membership expertise in this area.

d. What would change?

- The provision regarding IRBs avoiding membership that consists entirely of individuals of one gender or profession would be eliminated because the requirement that IRB membership reflect members of varying backgrounds and diversity, including gender, would accomplish the same goal.
- The provision regarding the IRB's expertise in the review of research involving a vulnerable category of subjects would be limited to the subjects' vulnerability to coercion or undue influence
- The phrase economically or educationally disadvantaged persons is included as an example of a vulnerable category of subjects, requiring an IRB to give consideration to membership expertise in this area.
- The term ''handicapped'' persons is replaced with ''physically disabled persons'' as an example of a vulnerable category of subjects, requiring an IRB to give consideration to membership expertise in this area.

e. Question for Public Comment

84. Should populations be considered vulnerable for reasons other than vulnerability to coercion or undue influence? Are the proposed categories appropriate?

H. Other Proposed Changes

1. Proposal To Extend the Common Rule to All Clinical Trials (With Exceptions) (NPRM at § ____.101(a)(1))

a. NPRM Goals

The goal of this proposal is to ensure that studies that generally pose the most risk to potential subjects (such as surgical clinical trials), are encapsulated by the Common Rule. The proposal attempts to balance the goals of ensuring that studies where the Common Rule provides meaningful protections to subjects are covered under the rule, while studies where the administrative burdens of the Common Rule outweigh any potential benefits to subjects are not covered.

b. Current Rule

The Common Rule applies to all research involving human subjects that is conducted or supported by a Federal department or agency that has adopted the policy (§ ____.101(a)).

c. ANPRM Discussion

The ANPRM discussed the possibility of the Common Rule applying to all studies, regardless of funding source, that are conducted by a U.S. institution that receives some federal funding for human subjects research from a Common Rule agency.

The ANPRM also asked the public to consider a regulatory option to partially fulfill the goal of extending Common Rule protections to all human subjects research in the United States. The discussed policy would require domestic institutions that receive some federal funding from a Common Rule agency for non-exempt research with human subjects to extend the Common Rule protections to all human subjects research studies conducted at their institution.

d. NPRM Proposal

In response to ANPRM feedback, the Common Rule NPRM proposes an extension that would ensure that clinical trials are covered by the Common Rule if conducted at an institution in the United States that receives federal support for non-exempt and non-excluded human subjects research, regardless of the funding source of the specific clinical trial.

Note that the purpose of the clinical trials extension is to ensure that clinical trials that would otherwise not be covered by some body of federal research ethics regulations are covered. To that end, if a clinical trial is already subject to FDA oversight but not Common Rule oversight, since that clinical trial is subject to human subjects protection regulations, this change would not affect it. Also note that this proposed extension is based on whether an institution receives funding specifically for non-exempt and non-excluded research. This is because the Common Rule departments and agencies have a more substantial relationship with institutions that receive support from a Common Rule department or agency to conduct non-exempt and non-excluded human subjects research than those institutions that receive such support for only exempt and excluded human subjects research.

Although supporting the principle that all human subjects research regardless of funding source should be conducted ethically, public commenters generally expressed concern and caution about the ANPRM consideration for a variety of reasons. Behavioral and social science investigators thought that this approach would unnecessarily bring less-than-minimal-risk research funded by non-federal sources (*e.g.,* surveys or observational studies supported by the nonprofit sector) under burdensome regulatory requirements while not enhancing protections. Some commenters argued that the increased regulatory burden that would ensue was not warranted and would shift scarce oversight resources to review of research studies that are generally non-problematic and frequently supported by non-federal funds, such as some student or institutional research.

Others argued that such a change was an overreach of federal oversight and constituted an unfunded mandate. Commenters from large academic research institutions felt that this change inappropriately focused heavily on academic institutions, which generally extend protections to all human subjects research at their institution, even if they have not ''checked the box'' [76] on their FWA indicating that they do so. They argued that such a change would not reach those institutions already operating outside the federal research system and would limit flexibility in making risk-based determinations about the levels of review required.

Industry also expressed concern about having to comply with two sets of regulations, that is, FDA regulations as well as the Common Rule. The ANPRM did not clarify that the changes under consideration would not require compliance with the Common Rule of non-federally funded research subject to regulation by FDA. However, there might continue to be research that would be subject to both sets of regulations involving federal funding of research concerning an FDA-regulated product.

[76] The FWA covers all non-exempt human subjects research at the submitting institution that is conducted or supported by HHS, or funded by any other federal department or agency that has adopted the Common Rule and relies upon the FWA. It is not project specific. Domestic institutions may voluntarily extend their FWA (and thus a Common Rule department or agency's regulatory authority) to cover all human subjects research at the submitting institution regardless of the source of support for the particular research activity. See Office for Human Research Protections. (2011, June 17). What research does the Federalwide Assurance (FWA) cover? Retrieved from Frequently Asked Questions: *http://www.hhs.gov/ohrp/policy/faq/assurance-process/what-research-does-fwa-cover.html.*

Those commenters who supported a formal extension of the regulations cited the need to have one set of standards for all research, regardless of funding source; however, many noted that absent legislation covering all human subjects research conducted in the United States, it would be difficult to cover all research through a regulatory approach alone—gaps would still remain.

Thus, the NPRM proposes changes in the regulatory language at § ____.101(a)(2) to state that the policy extends to all clinical trials as defined by this policy, irrespective of funding source, that meet all of three conditions: (1) The clinical trials are conducted at an institution that receives support from a federal department or agency for human subjects research that is not excluded from this policy under § ____.101(b)(2), and the research does not qualify for exemption in accordance with § ____.104; (2) The clinical trials are not subject to FDA regulation; and (3) The clinical trials are conducted at an institution located within the United States.

For purposes of this policy, the NPRM proposes at § ____.102(b) that a clinical trial be a research study in which one or more human subjects are prospectively assigned to one or more interventions (which may include placebo or other control) to evaluate the effects of the interventions on biomedical or behavioral health-related outcomes. By the term ''behavioral outcomes,'' the NPRM contemplates the reality that clinical trials may occur outside of the biomedical context. The studies addressed in the proposed definition of clinical trial at § ____.102(b) are more likely to involve greater-than-minimal risk, and, therefore, require the highest level of oversight. Limiting the extension of the regulations to only the highest risk research is consistent with the goal of a more risk-based approach to review. For example, surgical clinical trials that do not receive support from a Common Rule department or agency often are outside of the scope of FDA's human subjects protection regulations. Thus, many of these unfunded activities are currently not subject to the protections afforded by the human subjects protection system. This NPRM proposal would cause many of these trials to come under the purview of the Common Rule.

e. What would change?

- Clinical trials as defined by proposed § ____.102(b), irrespective of funding source, would be subject to oversight, given specified conditions.

f. Questions for Public Comment

85. Public comment is sought on whether there might be unintended consequences from the clinical trials expansion proposed in the NPRM in § ____.101(a)(2)(i)). Unintended consequences may include an increase in burden or costs, or an inappropriate redistribution of costs.

86. Public comment is sought as to whether the criterion that the policy extends to all clinical trials conducted at an institution that receives federal support (see the NPRM at § ____.101(a)(2)(i)) should be further clarified in some way. For example, should it specify a timeframe for support (*e.g.,* within the past number of years), or a minimum monetary threshold value?

87. Public comment is sought on whether the definition of clinical trial (NPRM at § ____.102(b)) should include additional explanation of what is encompassed by the term behavioral health-related outcomes.

2. Changes to the Assurance Process (NPRM at §§ ____.103 and ____.108; Current Rule at § ____.103)

a. NPRM Goal

There has been concern expressed by some, such as SACHRP, that the current assurance process may be unduly burdensome for institutions and does not provide meaningful protections for human subjects. The changes proposed to the assurance process are intended to reduce unnecessary administrative burdens.

b. Current Rule

Requirements at § ____.103 delineate procedural requirements for institutions and IRBs to follow to comply with the Common Rule.

c. NPRM Proposals

A number of substantive and procedural modifications are proposed to § ____.103 of the Common Rule. The NPRM proposes to move the IRB recordkeeping requirements from § ____.103(b)(4) and (5) of the Common Rule. They are now described in the NPRM in § ____.108(a)(3) and (4), which pertains to IRB functions and operations

Additionally, the NPRM proposes to eliminate the current Common Rule requirement at § ____.103(b)(1) that an institution provide a statement of ethical principles with which an institution will abide as part of the assurance process. This change was made because this provision is generally not enforced. Further, for international institutions that may receive U.S. government funding for research activities, it creates the impression that these international institutions must modify their internal procedures to comport with the set of principles designated on the FWA for activities conducted at those institutions that receive no U.S. government funding. OHRP specifically has received many questions about the extent to which international institutions must adhere to the ethical principles designated as part of the assurance process in research activities conducted by the institution that receive no Common Rule department or agency funding. In order to provide clarity to these international institutions that such measures are not required, the NPRM proposes to delete the requirement at § ____.103(b)(1).

The NPRM also proposes to eliminate the requirement in § ____.103(b)(2) that an institution designate one or more IRBs on its FWA established in accordance with the Common Rule. The requirement in the current Common Rule at § ____.103(b)(2) that IRBs have sufficient meeting space and staff to support IRB reviews and recordkeeping requirements is found in the NPRM at § ____.108(a)(1). Note that federal departments or agencies retain the ability to ask for information about which IRBs review research conducted at an institution as part of the assurance process, even if that requirement is not explicitly mandated in the regulations.

Additionally, the NPRM proposes to eliminate the current requirement in § ____.103(b)(3) that an up-to-date list of the IRB members and their qualifications be included in an institution's assurance. Instead, proposed §§ ____.108(a)(2) and ____.115(a)(5) require that an IRB or the institution prepare and maintain a current list of IRB members. This modification also eliminates the current requirement in § ____.103(b)(3) that changes in IRB membership be reported to the department or agency head or to OHRP when the existence of an assurance approved by HHS for federalwide use is accepted. SACHRP recommended on March 28, 2008, that OHRP pursue harmonizing the Common Rule with FDA's human subjects protection regulations by eliminating the requirement to submit IRB membership lists. SACHRP members felt that submitting IRB membership lists and reporting all changes in IRB membership to OHRP added little to the protection of human subjects and that eliminating these requirements therefore would reduce unnecessary

administrative burdens on institutions and OHRP.[77]

Note that in implementing the NPRM an additional, non-regulatory change is planned to the assurance mechanism. The current option of ''checking the box'' on an FWA to extend HHS's (or other Common Rule supporting agencies') regulatory authority to studies conducted by an institution that do not receive federal support would be eliminated. Importantly, for research other than clinical trials, institutions could, if they so desired, continue for purposes of their own internal rules to voluntarily extend the regulations to all research conducted by the institution, but this voluntary extension would no longer be part of the assurance process and the research would not be subject to OHRP oversight. This change would be expected to have the beneficial effect of encouraging some institutions to explore a variety of new flexible approaches to overseeing low-risk research that is not funded by a Common Rule agency, thus furthering the goal of this NPRM to decrease inappropriate administrative burdens on such research.

In addition, the NPRM proposes to remove the provision found in the current Common Rule at § ____.103(d) that a department or agency head's evaluation of an assurance will take into consideration the adequacy of the proposed IRB(s) designated under the assurance in light of the anticipated scope of the institution's activities and the types of subject populations likely to be involved, the appropriateness of the proposed initial and continuing review procedures in light of the probable risks, and the size and complexity of the institution.

To further strengthen the new provision at § ____.101(a) giving Common Rule departments and agencies explicit authority to enforce compliance directly against IRBs that are not affiliated with an assured institution, language is proposed at § ____.103(e) requiring each IRB, institution, or organization that has oversight responsibility for non-exempt research involving human subjects covered by this policy and conducted by another institution to have and follow procedures for documenting the institution's reliance on the unaffiliated IRB and the respective responsibilities of each entity for meeting the regulatory requirements of this policy. This is already a requirement under the terms of a FWA. Such agreements would have to be included as part of the IRB records, per a proposed requirement at § ____.115(a)(10). This change is proposed to address concerns about OHRP's current practice of enforcing compliance with the Common Rule through the institutions that were engaged in human subjects research, even in circumstances when the regulatory violation is directly related to the responsibilities of an external IRB.

Finally, the NPRM would eliminate the requirement in the current Common Rule at § ____.103(f) that grant applications undergo IRB review and approval for the purposes of certification. The grant application is often outdated by the time the research study is submitted for IRB review and contains detailed information about the costs of a study, personnel, and administrative issues that go beyond the mission of the IRB to protect human subjects. Therefore, experience suggests that review and approval of the grant application is not a productive use of IRB time.

Note that each assured institution continues to have responsibility for ensuring that the IRBs upon which it relies are registered with OHRP and are appropriately constituted to review and approve the human subjects research, as required under §§ ____.107 and ____.108.

In developing the NPRM proposals related to the assurance process, consideration was given to the 2014 SACHRP recommendation that the assurance of compliance required under § ____.103 be provided through the grant-making or contract process, as one of multiple ''Representations and Certifications'' already made by institutions when they apply for federal grants, contracts or cooperative agreements.[78] SACHRP suggested that such a proposal may reduce administrative burden on IRB offices responsible for the FWA process without significantly diminishing the protection that these offices provide human subjects.

Ultimately, SACHRP's recommendation was not adopted as an NPRM proposal because of concerns regarding the impact that removal of the FWA process would have on the ability for Common Rule departments and agencies to determine their compliance authority in certain circumstances. As part of SACHRP's recommended change to the assurance process, it was envisioned that only the primary awardee of a grant or contract would be required to obtain an assurance, and that this assurance would be provided through the grant-making or contract process. Subawardees or subcontractors may also be engaged in human subjects research, which extends the funding Common Rule department's or agency's authority to such institutions. However, Common Rule departments or agencies may not be able to ascertain that such institutions are required to follow the Common Rule for such human subjects research at their institution in the absence of an assurance filed with a Common Rule department or agency (including OHRP). In addition, some institutions have over a thousand grants or contracts with Common Rule departments and agencies and therefore would have over a thousand assurances. Certain institutional changes (for example, changes in the signatory official or human protections administrator) will require assurances to be updated. Ensuring that assurances are appropriately updated and keeping track of these updates are likely to pose challenges to Common Rule departments or agencies.

d. What would change?

- The regulatory requirement that an institution identify a set of ethical principles on which an institution will rely in all research conducted at that institution, regardless of funding source for the activity, would be deleted.
- The regulatory requirement that a written assurance include a list of IRB members for each IRB designated under the assurance would be replaced by the requirement that a written assurance include a statement that, for each designated IRB, the institution, or when appropriate the IRB, prepares and maintains a current detailed list of the IRB members with information sufficient to describe each member's chief anticipated contributions to IRB deliberation and any employment or other relationship between each member and the institution.
- The regulatory requirement specifying that changes in IRB membership be reported to the department or agency head, or to OHRP when the existence of an HHS-approved assurance is accepted, would be deleted.
- The requirement would be deleted that a department or agency head's evaluation of an assurance take into consideration the adequacy of the proposed IRB in light of the anticipated scope of the institution's activities and

[77] Secretary's Advisory Committee on Human Research Protections. (2008, September 18). SACHRP Letter to HHS Secretary. Retrieved from Office for Human Research Protections: *http://www.hhs.gov/ohrp/sachrp/sachrpletter091808.html.*

[78] See Secretary's Advisory Committee on Human Research Protections (SACHRP). (2014, March 13). Final Recommendations on Assurances and Engagement. Retrieved from SACHRP's Meetings: *http://www.hhs.gov/ohrp/sachrp/mtgings/mtg03-14/assurancesandengagement recommendations.html.*

the types of subject populations likely to be involved, the appropriateness of the proposed initial and continuing review procedures in light of the probable risks, and the size and complexity of the institution.

• For non-exempt human subjects research that takes place at an institution in which IRB oversight is conducted by an IRB not affiliated with that institution, the institution and non-affiliated IRB must establish and follow written procedures that identify compliance responsibilities of each entity that are set forth in a written agreement between the institution and the IRB.

e. Question for Public Comment

88. Would protection to human subjects in research be enhanced if OHRP conducted routine periodic inspections to ensure that the membership of IRBs designated under FWAs satisfy the requirements of § ____.107?

3. Department or Agency Discretion about Applicability of the Policy (NPRM at § ____.101(c), (d), (i)) and Discretion Regarding Additional Requirements Imposed by the Conducting or Supporting Department or Agency (NPRM and current Rule at § ____.124)

a. NPRM Goals

The goals of the NPRM revisions in these sections are to: (1) Formally codify the general practice that the ethical standards articulated in the Belmont Report is the ethical standard that Common Rule departments or agencies will use in determining whether an activity is covered under this policy; and (2) ensure that when relevant, either the department or agency conducting or supporting an activity may require additional protections for human subjects.

b. Current Rule

The current Common Rule allows in § ____.101(c), (d), (i) for Federal department or agency heads to determine which specific activities or classes of activities are covered by the rule.

c. NPRM Proposals

As described in section II.A.2 above, the NPRM proposes to exclude specific categories of low-risk research and non-research activities from the scope of the Common Rule in order to reduce regulatory burden. Of course, there will be cases that call for the exercise of careful judgment in determining whether activities are in an exclusion category, or whether they are within the scope of the Common Rule. The NPRM proposes to retain the Common Rule's current requirement that Federal department or agency heads retain final judgment about the coverage of particular research activities under the Common Rule (§ ____.101(c)) and proposes an additional clause that Federal department or agency heads must exercise their authority consistent with the principles of the Belmont Report, in order to require these Federal department and agency heads to make these judgments in consideration of the ethical protection of human research subjects.

The NPRM also proposes at § ____.101(d) that the agency may require additional protections for specific types of research supported or conducted by the agency or department; however advance public notice will be required when those additional requirements apply to entities outside of the Federal agency itself. This requirement is intended to promote harmonization between Federal agencies or departments, to the extent possible, and to ensure transparency between funding entities and the regulated community.

Finally, at § ____.101(i) the NPRM proposes to amend the criteria for a department or agency waiving the applicability of some or all of the provisions of the policy, by stating that the waiver must be supported by an argument that the alternative procedures to be followed are consistent with the principles of the Belmont Report. Here again, the addition of this provision is to make explicit the ethical basis underpinning how waiver decisions have and must be considered.

New definitions of ''Department or agency head'' and ''Federal department or agency'' are provided at § ____.102(c) and (d) in the NPRM to help clarify these requirements. The NPRM proposes in § ____.102(d) adding a definition of ''Federal department or agency'' in order to avoid confusion as to whether this phrase encompasses Federal departments or agencies that do not follow the Common Rule, and to clarify that this phrase refers to the department or agency itself, not its bureaus, offices or divisions. This is consistent with HHS's historical interpretation of the current Rule. To distinguish this from the definition of Department or agency head found in the current regulations at § ____.102(a) (and found in the NPRM at § ____.102(c)), the example of the Secretary of HHS has been inserted to provide clarity. In addition, the definition of ''institution'' has been changed at § ____.102(f) in the NPRM to clarify that departments can be considered institutions for the purposes of this policy.

4. Research Covered by This Policy Conducted in Foreign Countries (NPRM at § ____.101(h))

The current Common Rule at § ____.101(h) articulates that when research covered by this policy takes place in foreign countries, procedures normally followed in the foreign countries to protect human subjects may differ from those set forth in this policy. The current provision provides the Declaration of Helsinki, as amended in 1989, as an example of internationally recognized ethical standards that a foreign country might use as its ethical base. In this situation, the current Common Rule provides that if a department or agency head determines that the procedures prescribed by the institution afford protections that are at least equivalent to those provided in this policy, the department or agency head may approve the substitution of the foreign procedures in lieu of the procedural requirements provided in this policy.

The NPRM proposes to remove the specific example provided in this provision. A concern with providing a specific example of internationally recognized ethical document is that such a document is subject to change independent of HHS or other Common Rule agencies, and therefore could be modified to contain provisions that are inconsistent with U.S. laws and regulations.

I. Effective and Compliance Dates of New Rule (NPRM at § ____.101(k))

1. Effective Dates

It is anticipated that the effective date of the final rule will be one year after publication in the **Federal Register**. The compliance date of the new rules would also be one year from the publication of the Final Rule, with two exceptions discussed below. However, a provision that is anticipated to provide additional regulatory flexibility to institutions or investigators could voluntarily be implemented 90 days from the publication of the Final Rule. This 90-day delay would give the Common Rule departments and agencies time to develop the documents and tools needed to assist institutions in implementing some of these provisions (*e.g.,* the Secretary's broad consent template, and privacy safeguards under § ____.105). The provisions that would provide additional regulatory flexibility include:

• the proposed exclusions in § ____.101(b);

• the proposed exemptions in § ____.104(d), (e) and (f);
• the proposal to no longer require IRB review of grant applications (§ ____.103(f) in the current Common Rule);
• the proposal to eliminate the regulatory requirement in § ____.103 specifying that changes in IRB membership be reported to the department or agency head, or to OHRP when an HHS-approved assurance is approved;
• the proposed provision in § ____.109(f) to eliminate the continuing review requirement for studies that undergo expedited review and for studies that have completed study interventions and are merely analyzing data or involve only observational follow up in conjunction with standard clinical care;
• the proposed provision in § ____.116(g) stating that an IRB may approve a research proposal in which investigators obtain identifiable private information without individuals' informed consent for the purpose of screening, recruiting, or determining the eligibility of prospective human subjects of research, through oral or written communication or by accessing records, in order to obtain informed consent, if the research proposal includes an assurance that the investigator will implement standards for protecting the information obtained in accordance with and to the extent required by the § ____.105 privacy safeguards; and
• the new provision in § ____.117(c)(1)(iii) allowing a waiver of the requirement for a signed consent form if the subjects are members of a distinct cultural group or community for whom signing documents is not the norm, the research presents no more than minimal risk of harm to subjects, and there is an appropriate alternative method for documenting that informed consent was obtained.

In two cases, institutions would have longer than one year to comply: (1) The proposal for the Common Rule to cover all biospecimens (§ ____.102(e) in the NPRM); and (2) the proposal in § ____.114(b)(1) regarding identifying a single IRB that would be responsible for the review of certain multi-institutional clinical trials. The compliance date for these requirements would be three years after the publication of the final rule to allow institutions the necessary time to develop institutional policies and procedures necessary to implement these provisions. Comment is sought about whether a different approach to phasing in these provisions would allow the regulated community to better implement the changes proposed in this NPRM. Additional possibilities discussed amongst the Common Rule agencies included providing smaller institutions more time to implement these two changes, and somehow incentivizing early compliance with these provisions.

Further, the extension of the regulations to clinical trials that are not directly funded by a Common Rule department or agency, but that are conducted at an institution that receives funding from a Common Rule department or agency for other human subjects research, would not apply to an institution until the institution received federal funding for non-exempt research in an award made after the effective date of the final rule.

2. Transition Provisions

The ANPRM suggested that any change related to the extent to which biospecimens are covered under the Common Rule would only apply to biospecimens collected after the effective date of the revised Common Rule. Commenters noted concerns about imposing consent requirements on the use of biospecimens already collected—that is, not grandfathering in such resources—especially if these biospecimens are non-identified. Requiring that consent be obtained for the use of these materials could result in their being rendered useless for research, which would represent a cost of its own in terms of lost opportunity. This concern was based on the practical limitations involved in obtaining consent for biospecimens that were de-identified in the past, given that it may not be possible to re-contact the original source.

a. Research Initiated Prior to the Effective Date of This Subpart (NPRM at § ____.101(k)(1))

The NPRM addresses the transition provisions for human subjects research (as defined in the NPRM) initiated before the effective date of the policy. Ongoing human subjects research initiated prior to the effective date of the final rule may choose to comply with the provisions that provide additional regulatory flexibility discussed above, but would not need to comply with additional requirements related to:
• Coverage of clinical trials (§ ____.101(a)(2));
• Written procedures for documenting an institution's reliance on an unaffiliated IRB (§ ____.103(e));
• New exempt research categories and determination requirements (§ ____.104(c)–(f));
• Information and biospecimen protection requirements (§ ____.105);
• New IRB roster and written procedural requirements (§ ____.108(a)(2));
• Continuing review requirements (§ ____.109(f)(2));
• Additional IRB approval criteria for information safeguards and return of results plans (§ ____.111(a)(7) and (8));
• Requirements for cooperative research (§ ____.114);
• IRB recordkeeping requirements for documenting an institution's reliance on an unaffiliated IRB and exemption determinations (§ ____.115(a)(10) and (11)); and
• Requirements for obtaining and documenting informed consent (§§ ____.116 and ____.117) that become effective on the date of the final rule.

b. Use of Prior Collections of Biospecimens (NPRM at § ____.101(k)(2))

Research involving the use of prior collections of biospecimens is permitted if the biospecimens were collected for either research or non-research purposes before the effective date of this subpart, and research use of the biospecimens occurs only after removal of any individually identifiable information associated with the biospecimens.

If prior collections of biospecimens are not individually identifiable, research using such non-identified biospecimens would continue to be not covered by the regulations even after the effective date of this policy.

Similarly, if prior collections of biospecimens are being stored or maintained in an individually identifiable form, but identifiers are removed from the biospecimens before being obtained by an investigator, the investigator's use of such nonidentifiable biospecimens would continue to be not covered by the regulations even after the effective date of this policy.

III. Regulatory Impact Analyses

A. Introduction

HHS has examined the impacts of this proposed rule under Executive Order 12866 on Regulatory Planning and Review (September 30, 1993); Executive Order 13563 on Improving Regulation and Regulatory Review (January 18, 2011); the Regulatory Flexibility Act of 1980, Public Law 96–354 (September 19, 1980); the Unfunded Mandates Reform Act of 1995, Public Law 104–4, (March 22, 1995); and Executive Order 13132 on Federalism (August 4, 1999).

Executive Order 12866 directs agencies to assess all costs and benefits of available regulatory alternatives and, if regulation is necessary, to select

regulatory approaches that maximize net benefits (including potential economic, environmental, public health and safety effects; distributive impacts; and equity). Executive Order 13563 is supplemental to and reaffirms the principles, structures, and definitions governing regulatory review as established in Executive Order 12866. HHS expects that this proposed rule would have an annual effect on the economy of $100 million or more in any one year and therefore is a significant regulatory action as defined by Executive Order 12866.

The Regulatory Flexibility Act (RFA) requires agencies that issue a regulation to analyze options for regulatory relief of small businesses if a rule has a significant impact on a substantial number of small entities.[79] The RFA generally defines a ''small entity'' as (1) a proprietary firm meeting the size standards of the Small Business Administration (SBA); (2) a nonprofit organization that is not dominant in its field; or (3) a small government jurisdiction with a population of less than 50,000 (states and individuals are not included in the definition of ''small entity'').[80] HHS considers a rule to have a significant economic impact on a substantial number of small entities if at least 5 percent of small entities experience an impact of more than 3 percent of revenue. HHS anticipates that the proposed rule would not have a significant economic impact on a substantial number of small entities. Supporting analysis is provided in section III.G below.

Section 202(a) of the Unfunded Mandates Reform Act of 1995[81] requires that agencies prepare a written statement, which includes an assessment of anticipated costs and benefits, before proposing ''any rule that includes any Federal mandate that may result in the expenditure by State, local, and tribal governments, in the aggregate, or by the private sector, of $100,000,000 or more (adjusted annually for inflation) in any one year.'' The current threshold after adjustment for inflation is $141 million, using the most current (2013) implicit price deflator for the gross domestic product. HHS expects this proposed rule to result in expenditures that would exceed this amount.

Executive Order 13132 establishes certain requirements that an agency must meet when it promulgates a rule that imposes substantial direct requirement costs on state and local governments or has federalism implications. HHS has determined that the proposed rule, if finalized, would not contain policies that would have substantial direct effects on the States, on the relationship between the National Government and the States, or on the distribution of power and responsibilities among the various levels of government. The proposed changes in the rule represent the Federal Government regulating its own program. Accordingly, HHS concludes that the proposed rule does not contain policies that have federalism implications as defined in Executive Order 13132 and, consequently, a federalism summary impact statement is not required.

B. Summary of the Proposed Rule

This NPRM is being issued to propose revisions to modernize, strengthen, and make more effective the current regulations for protecting human subjects. This proposed rule enhances clarity and transparency of the consent process by imposing stricter new requirements regarding the information that must be given to prospective subjects including the elements of consent in a variety of circumstances. It will also allow consent to the secondary research use of biospecimens and identifiable private information, given specific conditions are met. Enhanced protections to subjects are also achieved through greater transparency by posting of informed consent forms used in clinical trials. Several proposed changes (such as explicitly excluding certain activities from the rule, expanding the categories of research exempt from some of the requirements of the proposed rule, and eliminating continuing review by an IRB in some situations) would relieve the burden of unnecessary or unwarranted stringent review of some low-risk studies that do not pose threats to the welfare of subjects. Other proposed changes expand the reach of the regulations by covering all clinical trials, regardless of funding source, and by changing the definition of human subject to include research in which an investigator uses, studies, or analyzes a biospecimen. Single IRB review for multi-institutional studies would also be generally required, except where local IRB review is required by law, to reduce duplicative IRB reviews. Still other revisions clarify or revise requirements for and responsibilities of IRB review and documentation. New exempt categories are proposed, requiring that investigators and institutions comply with minimum standards for protecting privacy. A new process is also proposed through which investigators may input information about a prospective study into a tool in order for that tool to generate exemption determinations.

1. Accounting Table

Table 1 summarizes the quantified and non-quantified benefits and costs of all proposed changes to the Common Rule. Over the 2016–2025 period, present value benefits of $2,629 million and annualized benefits of $308 million are estimated using a 3 percent discount rate; present value benefits of $2,047 million and annualized benefits of $291 million are estimated using a 7 percent discount rate. Present value costs of $13,342 million and annualized costs of $1,564 million are estimated using a 3 percent discount rate; present value costs of $9,605 million and annualized costs of $1,367 million are estimated using a 7 percent discount rate. Non-quantified benefits include improved human subjects protections in clinical trials and biospecimen research not currently subject to oversight; enhanced oversight of research reviewed by unaffiliated IRBs; increased uniformity in regulatory requirements among Common Rule agencies; standardization of human subjects protections when variation among review IRBs is not warranted; revised informed consent forms and processes; improved protection of biospecimens and identifiable private information; and increased transparency of Common Rule agency-supported clinical trials to inform the development of new consent forms. Non-quantified costs include the time needed for consultation among Common Rule agencies before federal guidance is issued; and the time needed by investigators to obtain, document, and track the permissible uses of biospecimens and identifiable private information for secondary research use.

[79] 5 U.S.C. 603

[80] 5 U.S.C. 601

[81] 2 U.S.C. 1532

TABLE 1—ACCOUNTING TABLE OF BENEFITS AND COSTS OF ALL PROPOSED CHANGES

Benefits	Present value of 10 years by discount rate (millions of 2013 dollars)		Annualized value over 10 years by discount rate (millions of 2013 dollars)	
	3 Percent	7 Percent	3 Percent	7 Percent
Quantified Benefits	2,629	2,047	308	291

Non-quantified Benefits

Improved human subjects protections in clinical trials and biospecimen research not currently subject to oversight; enhanced oversight in research reviewed by unaffiliated IRBs; increased uniformity in regulatory requirements among Common Rule agencies; ethical benefit of respecting an individual's wishes in how his or her biospecimens are used in future research; standardization of human subjects protections when variation among review IRBs is not warranted; improved informed consent forms and processes; improved protection of biospecimens and identifiable private information; better ensuring availability of biospecimens for future research activities; and increased transparency of Common Rule-supported clinical trials to inform the development of new consent forms.

Costs	3 Percent	7 Percent	3 Percent	7 Percent
Quantified Costs	13,342	9,605	1,564	1,367

Non-quantified Costs

Time for consultation among Common Rule agencies before federal guidance is issued; time for investigators to obtain consent for secondary use of biospecimens or identifiable private information.

Table 2 summarizes the quantified present value benefits and costs of each proposed change to the Common Rule using a 3 percent discount rate.

TABLE 2—ACCOUNTING TABLE OF QUANTIFIED BENEFITS AND COSTS OF EACH PROPOSED CHANGE

Proposed change	Present value of 10 years at a 3 percent discount rate (millions of 2013 dollars)	
	Benefits	Costs
Costs to Learn New Requirements and Develop Training Materials; OHRP Costs to Develop Training and Guidance Materials, and To Implement the Rule		208
Extending Oversight to IRBs Unaffiliated With an Institution Holding an FWA		84.6
Extending Common Rule Compliance Oversight to Clinical Trials Regardless of Funding Source		18.3
Excluding Activities from the Requirements of the Common Rule because They are not Research	74.0	
Excluding Low-Risk Research from the Requirements of the Common Rule	740	
Clarifying and Harmonizing Regulatory Requirements and Agency Guidance		
Expanding the Definition of Human Subject to Include Research involving Non-Identified Biospecimens and Creating an Exemption for Secondary Research Using Biospecimens or Identifiable Private Information		101
Modifying the Assurance Requirements	5.81	
Requirement for Written Procedures and Agreements for Reliance on External IRBs		11.3
Eliminating the Requirement that the Grant Application Undergo IRB Review and Approval	310	
Tracking and Documenting Exemption Determinations		
Amending the Research and Demonstration Project Exemption	37.0	0.36
Expansion of Research Activities Exempt from IRB Review	70.0	
Exemption for the Storage and Maintenance of Biospecimens and Identifiable Private Information for Future, Unspecified Secondary Research Activities after Consent has been Sought and Obtained		1.58
Protection of Information and Biospecimens		457
Elimination of Continuing Review of Research Under Specific Conditions	145	38.8
Amending the Expedited Review Procedures	16.8	2.71
Revised Criteria for IRB Approval of Research	126	0.07
Cooperative Research	1,103	155
Changes in the Basic Elements of Consent, Including Documentation		4.55
Obtaining Consent to Secondary Use of Biospecimens and Identifiable Private Information		12,245
Elimination of Requirement to Waive Consent in Certain Subject Recruitment Activities	1.21	
Requirement for Posting of Consent Forms for Clinical Trials supported by Common Rule Department or Agencies		14.6
Alteration in Waiver for Documentation of Informed Consent in Certain Circumstances		

C. Need for the Proposed Rule

Federal regulations governing the protection of human subjects in research have been in place for more than three decades, and 20 years have passed since the Common Rule was adopted by 15 Federal departments and agencies [82] in

[82] The current 15 Common Rule signatory agencies are: Department of Agriculture; Department of Energy; National Aeronautics and Space Administration; Department of Commerce; Consumer Product Safety Commission; Agency for International Development; Department of Housing and Urban Development; Department of Justice; Department of Defense; Department of Education;

Continued

an effort to promote uniformity, understanding, and compliance with human subject protections. Today 18 departments and agencies have adopted the rule.[83] As such, compliance with the Common Rule is a condition for receiving federal funding from one of these agencies. Note that an additional agency (Department of Labor) is joining this proposed rulemaking in order to promulgate the Common Rule in DOL regulations and to apply the regulations to human subjects research that DOL may conduct or support, pending the scope of the final rule. Although professional organizations have codes of conduct and guidelines for members conducting research, only the Federal government has the authority to regulate the activities of institutions using public funds for human subjects research. Since the Common Rule was developed, the volume of research has increased, evolved, and diversified. Although the regulations have been amended over the years, the enterprise has changed to the point that the current regulations might be outdated in some important ways.

Under the current system, the regulated community notes that limited IRB resources are often diverted away from focusing on higher-risk studies because of the considerable time spent reviewing low-risk and minimal-risk research. Theoretically, this can result in inadequate attention devoted to research that could seriously harm subjects and unnecessary delay of very low-risk research. From the perspective of human subjects participating in research, the length and complexity of consent forms has been increasing even for relatively low-risk studies, hindering subject understanding of the research activities in which they participate. Current and prospective research subjects have increasingly indicated that they would like to be asked about the future research use of their biospecimens. This desire is not necessarily based on concern of inappropriate disclosure or use of personally identifiable private information generated from the biospecimen, but rather is rooted in the sense that subjects should, whenever possible, be asked about such future research use. Finally, the current system contains some oversight gaps that should be addressed to ensure that the system is covering the riskiest studies and that should compliance-related issues occur, the IRBs responsible for these issues may be held responsible. Provisions are needed to ensure the Rule's consistency with the principles of Belmont Report and to protect privacy in the context of increasing cybercrime and the introduction of modern research methods that may jeopardize subject privacy while not unnecessarily slowing research.

Thus, this NPRM proposes a number of measures to address the issues described above. Provisions that strengthen the requirements for informed consent and promote transparency in the informed consent process include: (1) Requiring that the informed consent form be designed and presented in such a way that facilitates a prospective subject's understanding of why one would want to participate in a research study or not; (2) requiring that the informed consent form present the required information before providing any other information to a prospective subject; (3) revising and adding to the required elements of consent; (4) requiring for certain clinical trials the posting of a copy of at least one version of a consent form on a publicly available federal Web site; and (5) changing the conditions and requirements for waiver or alteration of consent to remove ambiguity, including a new provision that under specific conditions an IRB may approve a research proposal in which investigators obtain identifiable private information without individuals' informed consent for the purpose of screening, recruiting, or determining eligibility of prospective human subjects of research.

Provisions that strengthen humans subjects protections include: (1) A provision that would hold IRBs not affiliated with engaged institutions directly responsible for compliance; (2) extending the scope of the policy to research most likely to involve greater-than-minimal risk, that is, clinical trials; and (3) creating standard privacy safeguards for biospecimens and information.

Provisions that strengthen the extent to which the ethics system promotes the principle of respect for persons: (1) Requiring informed consent for most research activities involving biospecimens, regardless of identifiability; (2) allowing for waiver of informed consent in research activities involving biospecimens only in rare circumstances; and (3) adding a provision that would prohibit waiver of consent if someone has been asked to provide their broad consent for future research use of their biospecimens or identified private information, and that person refuses to give such consent.

New provisions that would allow IRBs greater flexibility to focus resources on higher-risk research include: (1) Distinguishing categories of activities that would be excluded from the rule; and (2) expanding and clarifying categories of exempt research. Provisions that streamline or reduce burden for IRBs or institutions include: (1) Requiring consultation among the Common Rule agencies for the purpose of harmonizing guidance; (2) eliminating an administrative requirement for reporting IRB rosters; (3) removing the requirement that IRBs must review and approve grant applications; (4) eliminating under certain specific circumstances, continuing review for minimal risk studies that undergo expedited review; (5) clarifying when expedited review can occur; and (6) mandating use of a single IRB for multi-institutional studies.

D. Analysis of Benefits and Costs

In this section, the analysis of the quantified and non-quantified benefits and costs of the proposed changes to the Common Rule are presented. First, the common assumptions of the analysis are discussed. Then, this section presents the estimated quantified and non-quantified benefits and costs of the specific changes. Because of the lack of available data about IRB effectiveness and how IRBs function operationally,[84] many of the estimations in this analysis are based on anecdotal evidence. On all assumptions and estimates presented below, public comment is requested on the accuracy of these assumptions and on whether better data sources are available to support the analysis.

1. Analytic Assumptions

The analysis relies on common data elements and assumptions, detailed below, concerning the domestic entities, individuals, and IRB reviews affected by the proposed changes to the Common Rule. Many of the estimates are derived from a 1998 NIH-sponsored evaluation of the implementation of Section 491 of the Public Health Service Act, which involved nationally representative surveys of IRBs, institutions, and investigators. Based on a review of the literature, this study contains the best available data on the time spent on protocol reviews as well as the

Department of Veterans Affairs; Environmental Protection Agency; Department of Health and Human Services; National Science Foundation; and Department of Transportation.

[83] In addition to the signatory Common Rule departments and agencies, three departments and agencies have not issued the Common Rule but currently apply 45 CFR Part 46: The Central Intelligence Agency, the Social Security Administration, and the Department of Homeland Security.

[84] See, *e.g.,,* L Abbott and C. Grady, A Systematic Review of the Empirical Literature Evaluating IRBs: What We Know and What We Still Need to Learn. *http://www.ncbi.nlm.nih.gov/pmc/articles/PMC3235475/.*

characteristics of the reviews themselves. As previously stated, public comment is requested on these and other estimates used throughout the analysis.

According to the OHRP database of registered institutions and IRBs, there are approximately 8,035 institutions with a FWA, of which 2,871 have an IRB. Some institutions have multiple IRBs and some IRBs are not affiliated with an institution with an FWA, for a total of 3,499 IRBs.

The OHRP database of registered institutions and IRBs shows that there are 675,390 annual reviews of non-exempt protocols involving human subjects. It is estimated that there are 324,187 initial protocol reviews (48 percent) and 351,203 continuing protocol reviews (52 percent) based on estimates reported in Bell et al.[85] In each category, it is estimated that 69 percent of these reviews are convened and 31 percent are expedited based on estimates reported in Bell et al. It is estimated that there are 472,773 reviews of single-site protocols (70 percent) and 202,617 reviews of multi-site protocols (30 percent) based on estimates reported in Bell et al. This analysis also assumes that there are on average 5 IRB reviews per multiple-site protocol. This implies that there are 472,773 single-site protocols and 40,523 multi-site protocols, for a total of 513,296 protocols. The above implies that there are approximately 246,382 new protocols each year.

Based on queries of ClinicalTrials.gov, it is estimated that HHS supports 909 new clinical trials annually, of which 575 are regulated by FDA. In addition, it is estimated that there are 1,399 clinical trials currently not subject to oversight by either the Common Rule or FDA regulations. Finally, based on queries of ClinicalTrials.gov, Common Rule agencies support approximately 5,270 studies total.

Many individuals in various occupations would be affected by the proposed changes to the Common Rule. It is estimated that an average of one institution official at each institution with an FWA would be affected by these changes, for a total of 2,871 institution officials. The OHRP database of registered institutions and IRBs shows that there are 10,197 full-time equivalents (FTEs) staff persons at IRBs working as administrators or administrative staff, and that 89.8 percent of IRBs have an administrator. It is assumed that these individuals work full-time, implying a total of 3,193 IRB administrators and 7,004 IRB administrative staff. The OHRP database of IRB rosters contains 3,359 individuals who serve as IRB chairs and an additional 32,518 voting members. The number of IRB chairs is less than the number of IRBs because some individuals chair multiple IRBs. It is assumed that there are 439,968 investigators who conduct human subjects research in the United States.[86]

The hourly wages of individuals affected by the proposed changes to the Common Rule is estimated using information on annual salaries provided by the U.S. Bureau of Labor Statistics and the U.S. Office of Personal Management. The salary of postsecondary education administrators is used as a proxy for the salary of institution officials; the salary of lawyers is used as a proxy for the salary of institution legal staff and IRB administrators; the salary of office and administrative support workers is used as a proxy for the salary of IRB administrative staff; the salary of postsecondary health teachers is used as a proxy for the salary of IRB chairs and IRB voting members; the salary of postsecondary teachers is used as a proxy for the salary of investigators; the salary of database and systems administrators and network architects is used as a proxy for the salary of database administrators; and the salary of all occupations, as a proxy for the salary of prospective human subjects. The federal employees affected by the proposed changes to the Common Rule are assumed to be Step 5 within their GS-level and earn locality pay for the District of Columbia, Baltimore, and Northern Virginia. Annual salaries are divided by 2,087 hours to derive hourly wages. To project wages over 2016–2025, wages are adjusted for growth over time using the average annual per capita growth in real wage income over 1929–2012 reported by the U.S. Bureau of Economic Analysis, which is 2.1 percent. The total dollar value of labor, which includes wages, benefits, and overhead, is assumed to be equal to 200 percent of the wage rate.

The RIA calculates person-hours by occupation per initial protocol review and per continuing protocol review based on each occupation's share of total person-hours reported in Bell et al. In particular, Bell et al. reports that institution officials account for 4 percent, IRB administrators account for 28 percent, IRB administrative staff account for 30 percent, IRB chairs account for 7 percent, and IRB voting members account for 31 percent of total person-hours. The RIA assumes that the average number of person-hours spent per review equals the weighted average of the person-hours spent per convened review and the person-hours spent per expedited review. It is further assumed that convened review requires twice as many person-hours as expedited review.

Table 3 shows the number of entities affected by the proposed changes to the Common Rule and other common assumptions of the analysis (described above).

TABLE 3—NUMBER OF AFFECTED ENTITIES AND OTHER COMMON ASSUMPTIONS

Description	Estimate
U.S. Institutions and IRBs	
Institutions with a Federalwide Assurance	8,035
Institutions with an IRB	2,871
Institutions without an IRB	5,164
IRBs	3,499
Occupations	
Institution officials	2,871

[85] Bell J, Whiton J, and Connelly S, Final Report: Evaluation of NIH Implementation of Section 491 of the Public Health Service Act, Mandating a Program of Protection for Research Subjects, 1998.

[86] To derive this estimate, the number of new protocols, estimated above, is divided by the average number of new protocols submissions reported per investigator. This is estimated to be 2.8 based on Bell et al. This number is then multiplied by the average number of investigators working on each protocol (which is assumed to be 5). This allows for an accounting of investigators working on multiple protocols as well as protocols with multiple investigators.

TABLE 3—NUMBER OF AFFECTED ENTITIES AND OTHER COMMON ASSUMPTIONS—Continued

Description	Estimate
IRB administrators	3,193
IRB administrative staff	7,004
IRB chairs	3,359
IRB voting members	32,518
Investigators	439,968
Hourly Wages	
Institution officials (2013)	$48.20
Institution legal staff (2013)	$63.24
IRB administrators (2013)	$63.24
IRB administrative staff (2013)	$16.72
IRB chairs (2013)	$46.36
IRB voting members (2013)	$46.36
Investigators (2013)	$35.75
Database administrators (2013)	$38.69
Prospective Human Subjects (2013)	$22.25
Federal employees in the District of Columbia, Baltimore, and Northern Virginia (2013):	
GS–9 Step 5	$28.04
GS–13 Step 5	$48.35
GS–14 Step 5	$57.13
GS–15 Step 5	$67.21
Average annual per capita growth in real wage income	2.1%
IRB Reviews of Human Subjects Research Protocols at U.S. Institutions	
Annual reviews of non-exempt protocols	675,390
Initial protocol reviews (48%)	324,187
Convened reviews (69%)	223,689
Expedited reviews (31%)	100,498
Continuing protocol reviews (52%)	351,203
Convened reviews (69%)	242,330
Expedited reviews (31%)	108,873
Annual reviews of single-site protocols (70%)	472,773
Annual reviews of multi-site protocols (30%)	202,617
Human Subjects Research Protocols at U.S. Institutions	
Active protocols	513,296
Single-site protocols	472,773
Multi-site protocols	40,523
New protocols (48%)	246,382
Average number of IRB reviews per active multi-site protocol	5
Clinical Trials	
New clinical trials supported by HHS annually	909
Regulated by FDA	575
Active clinical trials currently not regulated by the Common Rule or FDA regulations	1,399
Clinical Trials supported by Common Rule Agencies	5,270
Person-Hours per Protocol Reviewed by Occupation and Type of Review	
Institution officials:	
Initial protocol reviews	
Convened reviews	0.52
Expedited reviews	0.26
Continuing protocol reviews:	
Convened reviews	0.10
Expedited reviews	0.05
IRB administrators:	
Initial protocol reviews:	
Convened reviews	3.64
Expedited reviews	1.82
Continuing protocol reviews:	
Convened reviews	0.68
Expedited reviews	0.34
IRB administrative staff:	
Initial protocol reviews:.	
Convened reviews	3.91
Expedited reviews	1.95
Continuing protocol reviews:	
Convened reviews	0.73

TABLE 3—NUMBER OF AFFECTED ENTITIES AND OTHER COMMON ASSUMPTIONS—Continued

Description	Estimate
Expedited reviews	0.36
IRB chairs:	
Initial protocol reviews:	
Convened reviews	0.91
Expedited reviews	0.46
Continuing protocol reviews:	
Convened reviews	0.17
Expedited reviews	0.08
IRB voting members:	
Initial protocol reviews:	
Convened reviews	2.70
Expedited reviews	1.35
Exempt reviews	0.50
Continuing protocol reviews:	
Convened reviews	0.75
Expedited reviews	0.38
Investigators:	
Initial protocol reviews:	
Convened reviews	13.65
Expedited reviews	7.15
Exempt reviews	0.50
Continuing protocol reviews:	
Convened reviews	6.83
Expedited reviews	3.58

2. Analysis of Proposed Changes

Presented below is an analysis of the quantified and non-quantified benefits and costs of the proposed changes to the Common Rule. For each proposed change, we describe and explain the need for the change, provide a qualitative summary of the anticipated benefits and costs, describe the methods we use to quantify benefits and costs, and then present estimates.

a. Costs for the Regulated Community to Learn New Requirements and Develop Training Materials; Costs for OHRP to Develop Materials and Guidance

Domestic institutions, IRBs, and investigators would need to spend time learning the proposed changes to the Common Rule once training materials become available to them. In addition, IRBs and OHRP would need to update training materials for investigators. Finally, OHRP would need to develop guidance, templates, lists, and a number of electronic resources (as stated in the NPRM).

The RIA estimates that institution officials, IRB administrators, IRB administrative staff, IRB chairs, IRB voting members, and investigators would each spend 5 hours to learn the proposed changes to the Common Rule. It is also estimated that institution officials would spend two hours to learn new procedures, IRB administrators would spend 20 hours, and administrative staff would spend 80 hours. Based on the estimates presented in Table 3, the dollar value of their time is calculated by multiplying hours by their estimated 2016 wages and adjusting for overhead and benefits. For example, to calculate the dollar value of time spent by institution officials to learn the proposed changes to the Common Rule in 2016, we multiply the number of institution officials (2,871) by the number of hours spent per institutional official (5), by the projected hourly wage of institution officials ($48.20), and by the adjustment factor for benefits and overhead (2).

In order to develop the resources required by the NPRM, it is anticipated that OHRP would need:

- Three staff people at the GS–14 level to: (1) Promote harmonization efforts to issue guidance across Common Rule agencies and departments; (2) develop a number of ''Secretary's Lists'' (akin to guidance documents) referenced in the rule that would be periodically reviewed and revised; (3) develop template agreements/contracts for use by the regulated community; (4) manage the administrative transition to the new processes proposed in the NPRM; and, (5) develop the language and technical requirements for a web-based tool that would allow investigators (and others) to determine if a project fits into a category of research exempt from certain regulatory requirements.
- One staff person at the GS–13 level to manage process changes proposed in the NPRM, and assist with implementation for the web-based tools and portals proposed.
- One staff person at the GS–9 level to provide technical support for the web-based portals proposed in the NPRM.

In addition, the first year after a final rule is published staffing resources beyond what is described above would be necessary:

- Three staff people at the GS–14 level to draft new guidance and revise old guidance.
- One staff person at the GS–14 level to conduct educational seminars.

OHRP also anticipates the following in non-personnel costs:

- Technical development of a web-based tool that investigators (and others) may use to determine if a project fits into a category of research that is exempt from certain regulatory requirements ($350,000)
- Technical development of two web-based portals for investigators to post final consent forms for HHS-funded clinical trials, and for investigators that conduct certain types of demonstration projects to post information about said projects ($200,000)
- Developing five educational seminars (including travel) to educate the public about the requirements of the new rule ($200,000)
- Upgrading equipment for education activities ($50,000)

Present value costs of $208 million and annualized costs of $24.3 million are estimated using a 3 percent discount rate; present value costs of $199 million and annualized costs of $28.3 million are estimated using a 7 percent discount rate. Table 4 summarizes the quantified

and non-quantified benefits and costs to learn new requirements and develop training materials.

TABLE 4—SUMMARY OF ESTIMATED BENEFITS AND COSTS TO LEARN NEW REQUIREMENTS AND DEVELOP TRAINING MATERIALS

Benefits	Present value of 10 years by discount rate (millions of 2013 dollars)		Annualized value over 10 years by discount rate (millions of 2013 dollars)	
	3 Percent	7 Percent	3 Percent	7 Percent
Quantified Benefits				
None				
Non-quantified Benefits				
None (although benefits discussed in association with other provisions would be impossible without this activity).				
Costs	3 Percent	7 Percent	3 Percent	7 Percent
Quantified Costs				
Time and money to learn new requirements, update training materials, and develop tools	208	199	24.3	28.3
Non-quantified Costs				
None				

b. Extending Oversight to IRBs Unaffiliated With an Institution Holding a Federalwide Assurance (NPRM at § ____.101(a))

The NPRM proposes a change to place unaffiliated IRBs within the realm of entities to which the policy applies. This new provision gives Common Rule departments and agencies explicit authority to enforce compliance directly against IRBs that are not affiliated with an assured institution. This change addresses concerns about OHRP's current practice of enforcing compliance with the Common Rule through the institutions that were engaged in human subjects research, even in circumstances when the regulatory violation is directly related to the responsibilities of an external IRB. This change should encourage institutions to more willingly rely on qualified unaffiliated IRBs for cooperative research, as is required under the proposed changes at § ____.114 (see section III.D.2.s of this RIA below).

The OHRP database of assured institutions and registered IRBs shows that there are approximately 449 IRBs not affiliated with an institution holding an FWA that would now be subject to oversight. These IRBs would develop an estimated average of 10 written agreements with other institutions each year as a result of this proposal. It is further estimated that each agreement would require an average of 10 hours of institution legal staff time and 5 hours of IRB administrator time to complete.

The estimated costs to institution officials, IRB administrators, IRB administrative staff, IRB chairs, IRB voting members, and investigators of conducting these reviews are based on the estimates presented in Table 3. The dollar value of their time is calculated by multiplying hours by their estimated 2016–2025 wages and adjusting for overhead and benefits.

Present value costs of $84.6 million and annualized costs of $9.93 million are estimated using a 3 percent discount rate; present value costs of $69.2 million and annualized costs of $9.86 million are estimated using a 7 percent discount rate. Table 5 summarizes the quantified and non-quantified benefits and costs of extending oversight to IRBs unaffiliated with an institution holding an FWA.

TABLE 5—SUMMARY OF ESTIMATED BENEFITS AND COSTS OF EXTENDING OVERSIGHT TO IRBS UNAFFILIATED WITH AN INSTITUTION HOLDING AN FEDERALWIDE ASSURANCE (NPRM AT § ____.101(a))

Benefits	Present value of 10 years by discount rate (millions of 2013 dollars)		Annualized value over 10 years by discount rate (millions of 2013 dollars)	
	3 Percent	7 Percent	3 Percent	7 Percent
Quantified Benefits				
None				
Non-quantified Benefits				
Encouragement to institutions to rely on unaffiliated IRBs when appropriate.				
Costs	3 Percent	7 Percent	3 Percent	7 Percent
Quantified Costs				
Developing IRB authorization agreements	84.6	69.2	9.93	9.86
Non-quantified Costs				
None				

c. Extending Common Rule Compliance Oversight to Clinical Trials Regardless of Funding Source (NPRM at § ____.101(a)(2))

The proposed rule would extend the regulations to cover clinical trials conducted at an institution in the United States that receives federal support from a Common Rule department or agency for non-exempt, non-excluded human subjects research, regardless of the funding source of the specific clinical trial. Extension of the rules would not apply to clinical trials already regulated by FDA.

A small percentage of clinical trials currently are not subject to oversight by either the Common Rule or FDA regulations. This change in policy gives OHRP the authority to conduct oversight compliance of clinical trials not otherwise subject to human subjects protection regulations. The benefits to be gained in terms of equitable and just distribution of protections to all subjects of clinical trials warrant closing this gap in the current system. Moreover, while it is expected that this extension would apply to only a small percentage of clinical trials, they are the type of studies that often pose the greatest risks to subjects. Since this extension is expected to bring research that poses the most risk to research subjects under the rules, it is presumed that the current option in the FWA that allows institutions to voluntarily extend the funding Common Rule department or agency's compliance oversight authority to all research conducted at an institution regardless of funding source (*i.e.,* ''checking the box'') would be unnecessary.

Although more research would be covered by the policy, the extension is contingent on an entity receiving federal support for non-exempt human subjects research; thus, the entity already should have an established IRB in place and would not incur costs establishing one or contracting with an unaffiliated IRB.

The RIA estimates that there are 1,399 clinical trials currently not subject to oversight by either the Common Rule or FDA regulations. It is estimated that in 2016 all 1,399 of these clinical trials would undergo convened initial review. In subsequent years, an estimated 672 protocols would undergo convened initial review, 502 would undergo convened continuing review, and 225 would undergo expedited continuing review based on the distribution of reviews presented in Table 3.

The estimated costs to institution officials, IRB administrators, IRB administrative staff, IRB chairs, IRB voting members, and investigators of conducting these reviews are based on the estimates presented in Table 3. The dollar value of their time is calculated by multiplying hours by their estimated 2016–2025 wages and adjusting for overhead and benefits.

Present value costs of $18.3 million and annualized costs of $2.15 million are estimated using a 3 percent discount rate; present value costs of $15.1 million and annualized costs of $2.15 million are estimated using a 7 percent discount rate. Table 6 summarizes the quantified and non-quantified benefits and costs of oversight for clinical trials currently not subject to oversight.

TABLE 6—SUMMARY OF ESTIMATED BENEFITS AND COSTS OF EXTENDING COMMON RULE COMPLIANCE OVERSIGHT FOR CLINICAL TRIALS REGARDLESS OF FUNDING SOURCE (NPRM AT § ____.101(a)(2))

Benefits	Present value of 10 years by discount rate (millions of 2013 dollars)		Annualized value over 10 years by discount rate (millions of 2013 dollars)	
	3 Percent	7 Percent	3 Percent	7 Percent
Quantified Benefits				
None				
Non-quantified Benefits				
Improving institutional willingness to use unaffiliated IRBS, thereby facilitating the implementation of the proposed changes to § ____.114 (Cooperative Research).				
Costs	3 Percent	7 Percent	3 Percent	7 Percent
Quantified Costs				
Increase in number of reviews	18.3	15.1	2.15	2.15
Non-quantified Costs				
None				

d. Activities Excluded From the Requirements of the Common Rule Because They Are Not Research (NPRM at § ____.101(b)(1))

Six categories of activities would be excluded from the regulatory requirements of the Common Rule because they are not considered research as defined in § ____.102(l) in the NPRM: (1) Certain data collection and analysis activities conducted for an institution's own internal operation and program improvement purposes; (2) certain activities that focus directly on the specific individuals about whom the information is collected (*i.e.,* oral history, journalism, biography, and historical scholarship); (3) certain collection and analysis activities conducted by a criminal justice agency solely for criminal justice investigative purposes; (4) certain quality assurance or improvement activities; (5) certain public health surveillance activities; and (6) certain activities conducted by a defense, national security, or homeland security authority. The proposal in the NPRM to explicitly list certain activities that are not considered ''research'' for the purposes of this policy is not intended to suggest that these are the only six categories that may be considered not to meet the definition of ''research.''

Federal agencies (and some institutions in the regulated community) engaged in activities considered in these exclusions already interpret such activities as excluded from the regulations. Thus, in general, the exclusions found in proposed § ____.101(b)(1) represent a proposed codification of current practice. However, comments to the ANPRM suggested that at many institutions, activities that would now be explicitly excluded from the policy are being routinely reviewed by IRBs. While many

institutions are specifically creating policies to state that oral history or journalism activities do not require IRB review,[87] institutions vary and some continue to require IRB review for other activities (such as quality improvement activities [88]) that may not meet the Common Rule's definition of research. Thus, explicitly excluding these six categories because they are to be considered not research would provide clarity to the regulatory community about what constitutes research per this policy, and also likely result in a modest decrease in the number of IRB reviews that occur each year in institutions.

Institutions, investigators, and IRBs involved in supporting, conducting, or reviewing these activities would no longer incur the costs of IRB review and approval and continuing review. Activities that were not intended to be subject to the regulations would clearly be excluded, allowing such activities to proceed without delays caused by the need for IRB submission, review, and approval.

It is estimated that 6,754 annual reviews of protocols (1.0 percent) would no longer be conducted as a result of the exclusions proposed in § ____.101(b)(1). Of these reviews, 2,237 would have undergone convened initial review, 1,005 would have undergone expedited initial review, 2,423 would have undergone convened continuing review, and 1,089 would have undergone expedited continuing review based on the distribution of reviews presented in Table 3.

The estimated costs to institution officials, IRB administrators, IRB administrative staff, IRB chairs, IRB voting members, and investigators of conducting these reviews are based on the estimates presented in Table 3. The dollar value of their time is calculated by multiplying hours by their estimated 2016–2025 wages and adjusting for overhead and benefits.

Present value benefits of $74.0 million and annualized benefits of $8.67 million are estimated using a 3 percent discount rate, and present value benefits of $60.5 million and annualized benefits of $8.61 million are estimated using a 7 percent discount rate. Table 7 summarizes the quantified and non-quantified benefits and costs of excluding these activities from the requirements of the Common Rule.

TABLE 7—SUMMARY OF ESTIMATED BENEFITS AND COSTS OF EXCLUDING ACTIVITIES FROM THE REQUIREMENTS OF THE COMMON RULE BECAUSE THEY ARE NOT RESEARCH (NPRM AT § ____.101(b)(1))

Benefits	Present value of 10 years by discount rate (millions of 2013 dollars)		Annualized value over 10 years by discount rate (millions of 2013 dollars)	
	3 Percent	7 Percent	3 Percent	7 Percent
Quantified Benefits				
Reduction in number of reviews	74.0	60.5	8.67	8.31
Non-quantified Benefits				
Increased clarity in what must be reviewed; ability for IRBs to focus efforts on reviews of higher-risk, more complex, research activities.				
Costs	3 Percent	7 Percent	3 Percent	7 Percent
Quantified Costs				
None				
Non-quantified Costs				
None				

e. Low-Risk Research Activities Excluded From the Requirements of the Common Rule Because They Are Already Subject to Independent Controls (NPRM at § ____.101(b)(2))

The NPRM proposes that four additional categories of research activities be explicitly excluded from the regulatory requirements of the Common Rule because they are low-risk and already subject to independent controls in the absence of the protections of the Common Rule. These are: (1) Certain research activities that involve the use of certain educational tests, survey procedures, interview procedures, or observation of public behavior (a revised version of current exemption category 2); (2) certain research activities involving the collection or study of information (a revised version of current exemption category 4); (3) certain research activities conducted by a government agency using government-generated, non-research data; and (4) certain data collection and analysis activities using identifiable health information subject to the HIPAA Privacy Rule.

The current Common Rule articulates two exemptions (current Rule at § ____.101(b)(2) and (4)) that appear in a similar format in the proposed NPRM exclusions. Current Common Rule exemption category 2 is found in the NPRM in § ____.101(b)(2)(i); current exemption category 4 is found in NPRM § ____.101(b)(2)(ii). In addition to being considered excluded from the rule (rather than exempt from certain requirements of the rule), current exemption category 2 (NPRM § ____.101(b)(2)(i)) has been clarified to state that interventions in conjunction with collection of data through the use of educational tests, survey procedures, interview procedures or observation of public behavior uninfluenced by the investigator (including visual or auditory recording) may not be used in research activities that qualify for this exclusion. For the research activities at issue in the NPRM at § ____.101(b)(2)(i), it is presumed that the activities poses little to no risk to subjects, and that the subjects knowingly and willingly

[87] See *e.g.,* Schrag, ZM ''Smithsonian Frees Oral History, Journalism, and Folklore,'' *Institutional Review Blog,* 30 July 2010, *http://www.institutionalreviewblog.com/2010/07/smithsonian-frees-oral-history.html.* See also ''More Universities Deregulate Oral History'', 7 April 2010, *http://www.institutionalreviewblog.com/2010/04/more-universities-deregulate-oral.html.*

[88] See *e.g.,* Baily, MA ''Quality Improvement Methods in Health Care,'' in From Birth to Death and Bench to Clinic: The Hastings Center Bioethics Briefing Book for Journalists, Policymakers, and Campaigns, ed. Mary Crowley (Garrison, NY: The Hastings Center, 2008), 147–152 *http://www.thehastingscenter.org/Publications/BriefingBook/Detail.aspx?id=2204.*

provide the information, or decline to participate. Thus, IRB review of the research and consent related documents are not believed to be necessary for such activities.

Four changes are proposed to current exemption category 4 (NPRM at § ____.101(b)(2)(ii)). First, the provision would now be considered excluded from the rule, not just exempt from certain requirements of the rule. Second, the provision no longer includes pathological specimens or diagnostic specimens. Third, NPRM § ____.101(b)(2)(ii) removes the word ''existing'' from the provisions. This is intended to clarify the scope of the exclusion to allow for information that will be collected in the future. Finally, a condition is added requiring that the exclusion may only be used when the investigator has no plans to contact subjects, re-identify subject, or otherwise conduct an analysis that could lead to creating identifiable private information.

Neither the exclusion at NPRM § ____.101(b)(2)(iii) (certain research activities conducted by a government agency using government-generated, non-research data) nor the exclusion at NPRM § ____.101(b)(2)(iv) (certain data collection and analysis activities using identifiable health information subject to the HIPAA Privacy Rule) appear in the current Rule. These research activities are excluded because human subjects are independently protected through other mechanisms or laws. It is anticipated that the exclusion of activities regulated by HIPAA as health care operation activities, public health activities, or research (NPRM at § ____.101(b)(2)(iv)) would represent a significant reduction in the volume of activities an IRB reviews. For example, the proposed exclusion at § ____.101(b)(2)(iv) would mean that at institutions subject to the HIPAA regulations, projects where one is simply analyzing protected health information from medical charts would not be required to undergo IRB review.

Institutions, investigators, and IRBs involved in supporting, conducting, or reviewing these activities would no longer incur the costs of IRB review, approval, and continuing review. Activities that were not intended to be subject to the regulations would clearly be excluded, allowing such activities to proceed without delays caused by the need for IRB submission, review, and approval.

The RIA estimates that 67,539 annual reviews of protocols (10.0 percent) would no longer be conducted as a result of the proposed exclusions in § ____.101(b)(2). It is anticipated that the exclusion of certain activities covered by the HIPAA Privacy Rule would drive the estimated reduction in annual IRB reviews of protocols. Of these reviews, 22,369 would have undergone convened initial review, 10,050 would have undergone expedited initial review, 24,233 would have undergone convened continuing review, and 10,887 would have undergone expedited continuing review based on the distribution of reviews presented in Table 3.

The estimated costs to institution officials, IRB administrators, IRB administrative staff, IRB chairs, IRB voting members, and investigators of conducting these reviews are based on the estimates presented in Table 3. The dollar value of their time is calculated by multiplying hours by their estimated 2016–2025 wages and adjusting for overhead and benefits.

Present value benefits of $740 million and annualized benefits of $86.7 million are estimated using a 3 percent discount rate, and present value benefits of $605 million and annualized benefits of $86.1 million are estimated using a 7 percent discount rate. Table 8 summarizes the quantified and non-quantified benefits and costs of excluding these activities from the requirements of the Common Rule.

TABLE 8—SUMMARY OF ESTIMATED BENEFITS AND COSTS OF EXCLUDING LOW-RISK RESEARCH FROM THE REQUIREMENTS OF THE COMMON RULE (NPRM AT § ____.101(b)(2))

Benefits	Present value of 10 years by discount rate (millions of 2013 dollars)		Annualized value over 10 years by discount rate (millions of 2013 dollars)	
	3 Percent	7 Percent	3 Percent	7 Percent
Quantified Benefits				
Reduction in number of reviews	740	605	86.7	86.1
Non-quantified Benefits				
Clarity in what research activities must be reviewed; ability for IRBs to focus efforts on reviews of higher-risk, more complex, research activities.				
Costs	3 Percent	7 Percent	3 Percent	7 Percent
Quantified Costs				
None				
Non-quantified Costs				
None				

f. Clarifying and Harmonizing Regulatory Requirements and Agency Guidance (NPRM at § ____.101(j)

The proposed rule would require consultation among the Common Rule agencies for the purpose of harmonization of guidance, to the extent appropriate, before federal guidance on the Common Rule is issued, unless such consultation is not feasible. The proposal also recognizes that harmonization would not always be possible or desirable given the varied missions of the agencies that oversee the protection of human subjects and differences in statutory authorities. Note that this is a codification of harmonization efforts currently occurring across Common Rule agencies.

This proposal appropriately recognizes the importance of harmonized guidance for the regulated community by creating, as much as possible, consistent interpretations of the regulations.

There is no compliance requirement for the regulated community associated with this provision. It is anticipated that harmonization would create greater

uniformity in the regulatory requirements for investigators, institutions, and IRBs, which could reduce confusion and time spent complying with multiple sets of regulations. Costs for achieving harmonization would be borne by the Common Rule agencies.

As this change likely would not impact staffing requirements at Common Rule agencies, no costs are quantified here. It is possible however, that the harmonization requirement could result in it taking longer for Common Rule agency guidance to be approved and issued to the public. Similarly, as it is unclear the extent to which this change would reduce the time IRBs spend on reviewing protocols, benefits are also not quantified. Table 9 summarizes the non-quantified benefits and costs of clarifying and harmonizing regulatory requirements and agency guidance.

TABLE 9—SUMMARY OF ESTIMATED BENEFITS AND COSTS OF CLARIFYING AND HARMONIZING REGULATORY REQUIREMENTS AND AGENCY GUIDANCE (NPRM AT § ____.101(j))

Benefits	Present value of 10 years by discount rate (millions of 2013 dollars)		Annualized value over 10 years by discount rate (millions of 2013 dollars)	
	3 Percent	7 Percent	3 Percent	7 Percent
Quantified Benefits				
None				
Non-quantified Benefits				
Increased uniformity in regulatory requirements among Common Rule agencies; increased clarity to the regulated community about how regulations should be interpreted.				
Costs	3 Percent	7 Percent	3 Percent	7 Percent
Quantified Costs				
None				
Non-quantified Costs				
Time for consultation among Common Rule agencies before federal guidance is issued.				

g. Expanding the Definition of Human Subject To Include Research Involving Non-Identified Biospecimens and Creating an Exemption for Secondary Research Using Biospecimens or Identifiable Private Information (NPRM at §§ ____.102(e), ____.101(b)(3)(i), and ____.104(f)(2))

The NPRM proposes to expand the definition of human subjects to include research in which an investigator obtains, uses, studies or analyzes a biospecimen. This would apply regardless of the identifiability of the biospecimen. Generally, investigators would not be allowed to remove identifiers from biospecimens without obtaining informed consent or a waiver of consent. Written consent would generally be required for such activities. Thus, this change will significantly expand the amount of research that is subject to the Common Rule. This requirement would not apply to biospecimens and information already collected at the time the final rule is published. Proposed § ____.101(b)(3)(i) would exclude research activities involving non-identified biospecimens where no new information about an individual is generated. While activities such as developing new testing assays could be excluded under this provision, it is anticipated that under the NPRM proposals, most research with biospecimens would now fall under the Rule.

At its core, this proposal is intended to promote the ethical principle of respect for persons. In addition to promoting respect for persons in the research enterprise, the proposed regulatory structure for research with biospecimens (whereby consent is sought for almost all research activities involving biospecimens) will encourage investigators to retain identifiers, which can enhance research by preserving the ability to link to important additional information about the subject. Additionally, members of the regulated community have reported situations where, even though not currently required by regulation, investigators were told by an IRB that they needed to obtain study-specific consent for research activities involving non-identified biospecimens. Under the current NPRM proposals, such a situation would not occur because consent—be it broad or study specific—would always be obtained for research involving biospecimens.

While this proposal will promote the ethical principle of respect for persons, it also will significantly increase the volume of studies for which investigators must seek and document informed consent (unless more stringent waiver criteria are met). The RIA estimates that there are 250,000 studies using biospecimens each year that are not currently subject to oversight by either the Common Rule or FDA regulations because they have been stripped of identifiers. Extrapolations from 1999 data [89] suggest that biospecimens are collected from as many as 30 million individuals and are stored each year for both clinical and research purposes. Approximately 9 million individuals' biospecimens (30 percent) are collected for research purposes. As a conservative estimate, approximately 6.3 million individuals' biospecimens (30 percent) could potentially be used in future research studies. Thus, it is possible that investigators would seek consent to secondary use of biospecimens or a waiver of consent for an additional 15 million individuals annually for secondary use of biospecimens.

In the absence of comprehensive data, to calculate the number of protocols that will now be covered, two approaches are proposed; public comment is requested on these estimates and approaches. Under method one, it is estimated that approximately 50 biospecimens will be used on average per research protocol involving biospecimens. This gives a potential 300,000 new research protocols using

[89] Eiseman, E., Haga, S. (1999). *Handbook of Human Tissue Sources: A National Resource of Human Tissue Samples.* Washington, DC: RAND Corporation.

non-identified biospecimens. This estimate of 300,000 new research protocols is rounded down to 250,000 new studies because based on ANPRM comments and industry data, it seems reasonable to assume that, as a conservative estimate, the number of new biospecimen studies encapsulated by the proposed rule would equal the total number of new protocols conducted each year (*i.e.,* the number of new biospecimen studies is likely close to the estimate of 246,382 new annual studies).

Under method two, biospecimen repository representatives report that roughly 90 percent of their collections are used in non-identified form in research activities that do not fall under the current Common Rule. Thus, only 10 percent of biospecimen studies are currently covered by the Common Rule, representing a 9:1 ratio of studies involving non-identified biospecimens to studies involving identifiable biospecimens. Of the 246,382 new protocols each year that are non-exempt (Table 3), we assume conservatively that 10–15 percent are using identifiable biospecimens. This equates to between 24,638 and 36,957 new studies each year using identifiable biospecimens. As previously discussed, it is estimated that the number of biospecimen studies that occur on non-identified biospecimens each year is approximately 9 times the number of studies using identifiable biospecimens, or between 221,741 and 332,613 studies each year. Thus, under method two, an estimate of 250,000 new studies on non-identified biospecimens each year is also reasonable.

In order to facilitate research with biospecimens, the NPRM proposes to create separate elements of broad consent (NPRM at § ____.116(c), discussed in III.D.2.u below) such that investigators and institutions may seek, and individuals may grant, consent for future unspecified research activities. The NPRM also proposes an exemption that relies on obtaining broad consent for future, unspecified research studies (NPRM at § ____.104(f)(2)). In order to be eligible for the exemption proposed in § ____.104(f)(2), broad consent must have been sought and obtained using the Secretary's template for broad consent (described in proposed § ____.116(d)(3)), and the investigator must not anticipate returning individual research results to subjects. To facilitate secondary research using biospecimens and identifiable private information, the NPRM also proposes an exemption for the storage and maintenance of biospecimens and identifiable private information for future, unspecified, secondary research activities (NPRM at § ____.104(f)(1)), which is described in more detail in Section III.D.2.n below).

The exemption proposed at § ____.104(f)(2) is specifically for secondary research studies involving biospecimens and identifiable private information that have been or will be acquired for purposes other than the currently proposed research study. If a secondary research study does not meet the requirements of this exemption category, the investigator would need to seek IRB review of the study, and would need to obtain either study-specific consent or a waiver of informed consent under the Common Rule. Note that for biospecimens an IRB would apply the more stringent waiver criteria at proposed § ____.116(e)(2) or (f)(2). For identifiable private information, an IRB would apply the waiver criteria at proposed § ____.116(e)(1) or (f)(1), which are almost identical to the waiver criteria in the current Common Rule.

The proposed exemption at § ____.104(f)(2), also ensures that in secondary research conducted with biospecimens or identifiable private information, appropriate privacy safeguards are in place (through requiring adherence to the privacy safeguards described in § ____.105). Thus, although this provision is an expansion in the nature of research that is exempt, it is accompanied by certain requirements and safeguards.

It is anticipated that a majority of studies that utilize this exemption will be biospecimen studies. The extent to which individuals conducting secondary research studies involving identifiable private information will utilize this exemption is unknown given that there are additional pathways under this proposed rule to facilitate secondary research activities involving identifiable private information is unknown. To that end, the benefits and costs associated with this provision only take into consideration secondary research involving biospecimens. It is further anticipated that these revisions will result in higher value research with biospecimens being conducted with subjects' consent and without the need for full IRB review, or the need to go back to subjects to obtain consent for every secondary research study, as long as certain conditions are met.

Because the estimated 250,000 biospecimen studies each year that will be newly covered under the rule as a result of the proposed modification to the definition of human subject will likely be low or minimal risk, the RIA assumes that all of these will be eligible for the § ____.104(f)(2) exemption (so long as consent—broad or study specific—was sought and obtained). Benefits and costs associated with obtaining and tracking broad consent are discussed below in section III.D.2.u of this RIA. Because the compliance date for the expansion to the definition of human subject will be three years after the date of publication of a final rule, the benefits and costs described below assume a start date of 2019.

As required under § ____.104(c), an exemption determination must be made and documented for each of the 250,000 newly covered biospecimen studies. It is anticipated that in 50 percent of these studies (125,000 studies), investigators will spend 30 minutes entering information into the HHS-created decision tool in order for that tool to generate an exemption determination. In the remaining 125,000 studies, it is anticipated that investigators will spend 30 minutes preparing and submitting information about the study to an individual able to make exemption determinations (per § ____.104(c)). An individual at the IRB voting member level will spend an estimated 30 minutes per study to make an exemption determination.

In the absence of the proposed exempt category of research at § ____.104(f)(2) but taking into consideration the expansion to the definition of human subject, it is estimated that each year, all 250,000 of these studies will undergo convened initial review. In subsequent years, it is estimated estimate that 120,000 protocols would undergo convened initial review, 89,700 would undergo convened continuing review, and 40,300 would undergo expedited continuing review based on the distribution of reviews presented in Table 3.

The estimated costs to institution officials, IRB administrators, IRB administrative staff, IRB chairs, IRB voting members, and investigators of conducting these reviews are based on the estimates presented in Table 3. The dollar value of their time is calculated by multiplying hours by their estimated 2016–2025 wages and adjusting for overhead and benefits.

Present value costs of $101 million and annualized costs of $11.9 million are estimated using a 3 percent discount rate; present value costs of $77.8 million and annualized costs of $11.1 million are estimated using a 7 percent discount rate. Table 10 summarizes the quantified and non-quantified benefits and costs of amending the definition of human subject.

TABLE 10—SUMMARY OF EXPANDING THE DEFINITION OF HUMAN SUBJECT TO INCLUDE RESEARCH INVOLVING NON-IDENTIFIED BIOSPECIMENS AND CREATING AN EXEMPTION FOR SECONDARY RESEARCH USING BIOSPECIMENS OR IDENTIFIABLE PRIVATE INFORMATION (NPRM AT §§ ____.102(e), ____.101(b)(3)(i), AND ____.104(f)(2))

Benefits	Present value of 10 years by discount rate (millions of 2013 dollars)		Annualized value over 10 years by discount rate (millions of 2013 dollars)	
	3 Percent	7 Percent	3 Percent	7 Percent
Quantified Benefits				
Reduction in number of IRB reviews that would have otherwise occurred as a result of the expansion of the definition of human subject	.....	.....	.....	.....
Non-quantified Benefits				
Ethical benefit of respecting an individual's wishes in how his or her biospecimens are used in future; ensuring protection of human subjects in research activities involving non-identifiable biospecimens.				
Costs	3 Percent	7 Percent	3 Percent	7 Percent
Quantified Costs				
Determining that these studies are exempt in accordance with § ____.104(c)	101	77.8	11.9	11.1
Non-quantified Costs				
Potential reduction in number of biospecimens available for research.				

h. Modifying the Assurance Requirements (current Rule at § ____.103(b)(1), (b)(3), (d))

The NPRM proposes to modify the requirements of the assurance process in the following ways. First, the NPRM proposes to delete the requirement in the current Common Rule at § ____.103(b)(1) of identifying a statement of principles governing all research at an institution. As discussed in section II.H.2 of this preamble, the requirement for institutions to designate a set of ethical principles to which that institution will abide in all research activities is generally not enforced. Further, for international institutions that may receive U.S. government funding for research activities, it creates the impression that these international institutions must modify their internal procedures to comport with the set of principles designated on the FWA for activities conducted at those institutions that receive no U.S. government funding. In order to provide clarity to these international institutions that such measures are not required for activities that receive no Common Rule department or agency support, this provisions has been deleted.

The requirement that a written assurance include a list of IRB members for each IRB designated under the assurance would be replaced by the requirement that the assurance include a statement that for each designated IRB the institution, or when appropriate the IRB, prepares and maintains a current detailed list of the IRB members with information sufficient to describe each member's chief anticipated contributions to IRB deliberation; and any employment or other relationship between each member and the institution. The regulatory requirement at § ____.103(b)(3) that changes in IRB membership be reported to the department or agency head, or to OHRP when the existence of an HHS-approved assurance is accepted, would be deleted, eliminating the requirement. Instead, an institution would be required under proposed § ____.108(a)(2) to maintain a current IRB roster, but such a roster would not need to be submitted to OHRP or other agency managing the assurance of compliance process.

The proposed changes to the IRB roster requirement are expected to reduce administrative burden and have the following additional beneficial effects, without having any significant impact on the protection of human subjects:

- Reduction in the administrative burdens on institutions related to the submission of IRB membership lists to OHRP and, in some cases, to the departments and agencies that process their own assurances;
- Reduction in the administrative burdens on OHRP with respect to reviewing and processing new and updated IRB membership lists as part of the IRB registration process, as well as reductions, in some cases, in the administrative burdens on other departments and agencies that receive and review IRB membership lists and changes in IRB membership as part of their own assurance processes;
- In some cases, reduction in the volume of records that need to be created and retained by the departments and agencies regarding the review and processing of IRB membership lists; and
- Simplification of the process for the electronic submission and acceptance of IRB registrations via the OHRP Web site.

In addition, HHS anticipates modifying the FWA so that institutions would no longer have the option to ''check the box'' on an assurance and voluntarily extend the funding Common Rule department or agency's regulatory authority to all research conducted at an institution regardless of funding source. For research other than clinical trials, institutions could continue to voluntarily apply the regulations to all research conducted by the institution, but this voluntary extension would no longer be part of the FWA. Members of the regulated community report that whether or not they ''check the box'' on an assurance form, they tend to voluntarily apply the regulations to all research activities taking place at an institution regardless of funding. Thus, the removal of this option on an assurance form likely would not impact community practice. To that end, no costs have been associated with this provision.

Finally, the current requirement at § ____.103(d) that a department or agency head's evaluation of an assurance take into consideration the adequacy of the proposed IRB in light of the anticipated scope of the institution's activities and the types of subject populations likely to be involved, the appropriateness of the proposed initial

and continuing review procedures in light of the probable risks, and the size and complexity of the institution, would be deleted.

The deletion of this provision would eliminate an administrative process that is no longer meaningful given the purpose and design of the FWA and OHRP's processes for reviewing IRB registrations and reviewing and approving FWAs. This change also harmonizes the Common Rule with FDA's human subjects protection regulations by eliminating the requirement to submit IRB membership lists.

The RIA estimates that administrative staff at each IRB would spend 5 fewer hours complying with the assurance requirements. Based on the estimates presented in Table 3, the dollar value of their time is calculated by multiplying hours by their estimated 2016–2025 wages and adjusting for overhead and benefits.

Present value benefits of $5.81 million and annualized benefits of $0.68 million are estimated using a 3 percent discount rate; present value benefits of $4.10 million and annualized benefits of $0.58 million are estimated using a 7 percent discount rate. Table 11 summarizes the quantified and non-quantified benefits and costs of the proposed change to the IRB roster requirement.

TABLE 11—SUMMARY OF ESTIMATED BENEFITS AND COSTS OF PROPOSED CHANGE TO MODIFYING THE ASSURANCE REQUIREMENTS (CURRENT RULE AT § ____.103(b)(1), (b)(3), (d))

Benefits	Present value of 10 years by discount rate (millions of 2013 dollars)		Annualized value over 10 years by discount rate (millions of 2013 dollars)	
	3 Percent	7 Percent	3 Percent	7 Percent
Quantified Benefits				
Reduction in time for IRB administrative staff and OHRP staff to submit, review, and process IRB membership lists	5.81	4.10	0.68	0.58
Non-quantified Benefits				
Reduction in volume of records created by an institution				
Costs	3 Percent	7 Percent	3 Percent	7 Percent
Quantified Costs				
None				
Non-quantified Costs				
None				

i. Requirement for Written Procedures and Agreements for Reliance on External IRBs (NPRM at §§ ____.103(e) and ____.115(a)(10))

Language is proposed at § ____.103(e) requiring each IRB, institution, or organization that has oversight responsibility for non-exempt research involving human subjects covered by this policy and conducted by another institution to have a written agreement identifying the respective responsibilities of the IRB organization and the engaged institution for meeting the regulatory requirements of this policy. This is already a requirement under the terms of an FWA but this requirement increases the level of detail that has to be included in such agreements, specifically the roles and responsibilities of each party. In addition, a requirement is added at § ____.115(a)(10) that institutions or IRBs retain the agreement between the institution and IRB specifying the responsibilities that each entity would undertake to ensure compliance with the requirements of proposed § ____.103(e).

The new requirements for agreements between institutions and external IRBs would not apply to research initiated before the effective date of the rule. However, the new requirements would affect existing agreements between institutions and external IRBs in cases where the existing agreements are not study-specific, but rather pertain to all research conducted by the institution or to a category or categories of human subjects research.

Initially, costs would be involved in drafting, revising, and conducting managerial review of agreements to ensure they satisfy these new requirements. Anticipated benefits include enhanced protection of human subjects in research reviewed by nonaffiliated IRBs, and greater reliance on external IRBs as the IRB of record for cooperative research, as stipulated in proposed § ____.114.

Table 3 shows that there are 5,164 FWA-holding institutions without an IRB and 2,871 FWA-holding institutions with an IRB. We assume that the 5,164 FWA-holding institutions without an IRB have an average of 1 IRB authorization agreement that would need to be modified as a result of the new requirements for agreements between institutions and external IRBs in 2016. In addition, we assume that the 2,871 FWA-holding institutions with an IRB have an average of 0.20 IRB authorization agreements that would need to be modified in 2016. We estimate that each agreement would require an average of 10 hours of institution legal staff time and 5 hours of IRB administrator time to complete. The dollar value of their time is calculated by multiplying hours by their estimated 2016 wages and adjusting for overhead and benefits.

Present value costs of $11.3 million and annualized costs of $1.32 million are estimated using a 3 percent discount rate; present value costs of $10.8 million and annualized costs of $1.54 million are estimated using a 7 percent discount rate. Table 12 summarizes the quantified and non-quantified benefits and costs of the requirement for written procedures and agreements for reliance on external IRBs (§§ ____.103(e) and ____.115(a)(10) in the NPRM).

TABLE 12—SUMMARY OF REQUIREMENT FOR WRITTEN PROCEDURES AND AGREEMENTS FOR RELIANCE ON EXTERNAL IRBS (NPRM AT §§ ____.103(e) AND ____.115(a)(10))

Benefits	Present value of 10 years by discount rate (millions of 2013 dollars)		Annualized value over 10 years by discount rate (millions of 2013 dollars)	
	3 Percent	7 Percent	3 Percent	7 Percent
Quantified Benefits				
None				
Non-quantified Benefits				
Enhanced human subjects protections in research reviewed by nonaffiliated IRBs and encouragement to institutions to rely on external IRBs when appropriate				
Costs	3 Percent	7 Percent	3 Percent	7 Percent
Quantified Costs				
Time to modify written agreements between IRBs and institutions	11.3	10.8	1.32	1.54
Non-quantified Costs				
None				

j. Eliminating the Requirement That the Grant Application Undergo IRB Review and Approval (Current Rule at § ____.103(f))

The proposed rule would eliminate the requirement in the current Rule at § ____.103(f) that grant applications undergo IRB review and approval for the purposes of certification. As described in section II.h.2 of this preamble, the grant application is often outdated by the time the research study is submitted for IRB review and contains detailed information about the costs of a study, personnel, and administrative issues that go beyond the mission of the IRB to protect human subjects. Therefore, experience suggests that review and approval of the grant application is not a productive use of IRB time.

Eliminating the requirement that the grant application undergo IRB review and approval would reduce administrative costs to investigators and IRB voting members. The proposed change likely would not reduce protections for human subjects or impose other costs.

The RIA estimates that there are 324,187 initial reviews of protocols annually, of which 223,689 involve convened review and 100,498 involve expedited review based on the distribution of reviews presented in Table 3. For the purpose of this analysis, it is assumed that each protocol reviewed by an IRB is associated with one grant application or other funding proposal. The RIA estimates that investigators spend an average of 15 minutes compiling their grant applications when they submit a protocol for initial review. Further, it is estimated that IRBs typically use two primary reviewers for convened review and one primary reviewer for expedited review, and that primary reviewers spend an average of 30 minutes reviewing the grant application. Based on the estimates in Table 3, the dollar value of their time is calculated by multiplying hours by their estimated 2016–2025 wages and adjusting for overhead and benefits.

Present value benefits of $310 million and annualized benefits of $36.3 million are estimated using a 3 percent discount rate, and present value benefits of $219 million and annualized benefits of $31.1 million are estimated using a 7 percent discount rate. Table 13 summarizes the quantified and non-quantified benefits and costs of eliminating the requirement that the grant application undergo IRB review and approval.

TABLE 13—SUMMARY OF ESTIMATED BENEFITS AND COSTS OF ELIMINATING THE REQUIREMENT THAT THE GRANT APPLICATION UNDERGO IRB REVIEW AND APPROVAL (CURRENT RULE AT § ____.103(f))

Benefits	Present value of 10 years by discount rate (millions of 2013 dollars)		Annualized value over 10 years by discount rate (millions of 2013 dollars)	
	3 Percent	7 Percent	3 Percent	7 Percent
Quantified Benefits				
Decreased time associated with review	310	219	36.3	31.1
Non-quantified Benefits				
None				
Costs	3 Percent	7 Percent	3 Percent	7 Percent
Quantified Costs				
None				
Non-quantified Costs				
None				

k. Tracking and Documenting Exemption Determinations (NPRM at §§ ____.104(c) and ____.115(a)(11))

New in the NPRM is a proposal at § ____.104(c) that Federal departments and agencies would develop an exemption determination tool for use by investigators and institutions. Under the proposed rule, unless otherwise required by law, exemption determinations may be made by (1) an individual who is knowledgeable about the exemption categories and who has access to sufficient information to make an informed and reasonable determination, or (2) the investigator who accurately inputs information into the federally created web-based decision tool (NPRM at § ____.104(c)). Also new in the NPRM is a requirement at proposed § ____.115(a)(11) that an IRB maintain records of exemption determinations. Additionally, proposed § ____.104(c) specifies that the use of the exemption determination tool would satisfy the documentation requirement in proposed § ____.115(a)(11).

While the documentation requirement for exemption determinations is new, comments from members of the regulated community suggest that most institutions have systems in place already to make and document exemption determinations. Thus, the requirement of proposed § ____.115(a)(11) would likely have a negligible impact on institutions. Additionally, it is anticipated that use of the exemption determination tool described in proposed § ____.104(c) would likely represent a reduction in burden for institutions and investigators. First, institutions are not responsible for creating the decision tool; the Federal Government is. The costs associated with the development and maintenance of this tool are discussed above in section III.D.2.a of this RIA. Second, except for protocols for which IRB review is required by law and those for which the exemption tool is unable to issue determinations (and therefore still have to be submitted to an IRB for review), IRB offices would no longer need to devote significant resources to processing and reviewing studies for exemption because the use of the tool by the investigator would suffice. Third, the investigator would no longer need to engage in the time-intensive task of developing and submitting a formal application to an IRB for an exemption determination, which is standard practice at many institutions. Instead, the investigator would be able to answer questions in the to-be-created tool, and then be able to commence work if determination generated by the tool indicates that the proposed research activity meets one of the exemption categories.

The quantifiable benefits and costs associated with the use of the § __.104(c) decision tool are documented in each RIA discussion of exemption categories (sections II.D.2.f, l, m, n of this RIA). Note that while § __104(c) requires that an exemption determination be made before an exempt study may begin, the use of the proposed exemption determination tool is not mandated. Rather, the tool to be created by HHS is an option proposed in order to reduce burden on the investigators and institutions. Additionally, note that at present it is unknown how many studies are exempted under the current Rule each year. Thus, this RIA is only able to provide quantifiable benefits and costs for studies that are estimated to be newly exempted.

Table 14 summarizes the non-quantified benefits and costs of the tracking requirements for exemption determinations and the criteria for those eligible to make exemption decisions in NPRM § __.104(c).

TABLE 14—SUMMARY OF ESTIMATED BENEFITS AND COSTS OF TRACKING AND DOCUMENTING EXEMPTION DETERMINATIONS (NPRM AT §§ ____.104(c) AND ____.115(a)(11))

Benefits	Present value of 10 years by discount rate (millions of 2013 dollars)		Annualized value over 10 years by discount rate (millions of 2013 dollars)	
	3 Percent	7 Percent	3 Percent	7 Percent
Quantified Benefits				
None				
Non-quantified Benefits				
Reduced administrative burden for IRBs in reviewing exemption determinations, reduced time for investigators to receive an exemption determination.				
Costs	3 Percent	7 Percent	3 Percent	7 Percent
Quantified Costs				
None				
Non-quantified Costs				
None				

l. Exemption for Research and Demonstration Projects (NPRM at § __.104(d)(2))

The current exemption related to research and demonstration projects (current Rule at § __.101(b)(5)) would be revised to clarify that certain Common Rule agency or department supported activities currently fall within that scope. OHRP also proposes to broaden its interpretation of public benefit and service programs which are being evaluated as part of the research to include public benefit or service programs that an agency does not itself administer through its own employees or agents, but rather funds (*i.e.,* supports) through a grant or contract program. It has been OHRP's interpretation that the current exemption category 5 only applies to those research and demonstration projects designed to study a ''public benefit or service program'' that a Common Rule agency or department itself administers, and for which the public benefit or service program exists independent of any research initiative.

The proposed regulatory revision and change in OHRP's interpretation of the exemption is designed to clarify and broaden the scope of the exemption so that more research studies would be exempt. It is believed that these changes would make the exemption easier to apply appropriately and is expected to

reduce the number of studies that would be required to undergo IRB review. It is also designed to allow the Federal Government to carry out important evaluations of its public benefit and service programs to ensure that those programs are cost effective and deliver social goods without requiring IRB review and approval. The proposed changes to this exemption would require OHRP to revise its existing guidance document on this exemption accordingly. Costs associated with this revision are accounted for in section III.D.2.a above.

In addition, a requirement has been added that each Federal department or agency conducting or supporting the research and demonstration projects must establish on a publicly accessible federal Web site or in such other manner as the Secretary of HHS may prescribe, a list of the research and demonstration projects which the Federal department or agency conducts or supports under this provision. The research or demonstration project must be published on this list prior to or upon commencement of the research. This exemption is needed for government entities to carry out activities related to their important public health mission and functions; in acknowledgement of the fact that more-than-minimal-risk studies could be conducted under this exemption, the posting requirement promotes increased transparency in these activities.

Note that a study's exemption documentation requirement at § __.104(c) is satisfied by a Federal department or agency posting minimal information about the research or demonstration project on a federal, publicly accessible Web site. Thus, in general, an institutional official would not have to post any information to this Web site.

It is estimated that approximately 1,000 exempt research and demonstration studies are currently conducted each year.[90] It is further estimated that due to the change in OHRP's interpretation of the research and demonstration project exemption, an additional 3,377 annual reviews of protocols (0.5 percent) would no longer be conducted. Of these 3,377 reviews, 1,118 would have undergone convened initial review, 502 would have undergone expedited initial review, 1,212 would have undergone convened continuing review, and 544 would have undergone expedited continuing review based on the distribution of reviews presented in Table 3. Comment is requested on the accuracy of the estimates of the number of research and demonstration projects conducted each year.

The 4,377 estimated annual studies conducted under this exemption would need to be posted to a federal Web site as required by § __.104(d)(2)(i). It is anticipated that it would take individuals at the IRB administrative staff level 15 minutes per study to post the study to the Web site. Note that costs related to developing the Web site to which information about demonstration projects would be posted are calculated in section III.D.2.a of this RIA.

The estimated costs to institution officials, IRB administrators, IRB administrative staff, IRB chairs, IRB voting members, and investigators of conducting these reviews are based on the estimates presented in Table 3. The dollar value of their time is calculated by multiplying hours by their estimated 2016–2025 wages and adjusting for overhead and benefits.

Present value benefits of $37.0 million and annualized benefits of $4.34 million are estimated using a 3 percent discount rate, and present value benefits of $30.3 million and annualized benefits of $4.31 million are estimated using a 7 percent discount rate. Present value costs of $0.36 million and annualized costs of $0.04 million are estimated using a 3 percent discount rate; present value costs of $0.30 million and annualized costs of $0.04 million are estimated using a 7 percent discount rate. Table 15 summarizes the quantified and non-quantified benefits and costs of amending an exempt category.

TABLE 15—SUMMARY OF ESTIMATED BENEFITS AND COSTS OF AMENDING THE RESEARCH AND DEMONSTRATION PROJECT EXEMPTION (NPRM AT § ____.104(d)(2))

Benefits	Present value of 10 years by discount rate (millions of 2013 dollars)		Annualized value over 10 years by discount rate (millions of 2013 dollars)	
	3 Percent	7 Percent	3 Percent	7 Percent
Quantified Benefits				
Reduction in the number of studies requiring IRB review	37.0	30.3	4.34	4.31
Non-quantified Benefits				
Reduction in time to determine whether the exemption applies to research and demonstration studies; increased transparency to the public in the types of research activities conducted under this exemption				
Costs	3 Percent	7 Percent	3 Percent	7 Percent
Quantified Costs				
Communication of the exempt research and demonstration studies	0.36	0.30	0.04	0.04
Non-quantified Costs				
Possible delays in commencement of exempt research and demonstration studies until posting has occurred; revising federal guidance documents				

[90] Estimates based on queries of clinicaltrials.gov and a search of the CMS Web site. See *e.g.*, *http://www.medicaid.gov/medicaid-chip-program-information/by-topics/waivers/waivers_faceted.html*, and *https://www.cms.gov/Research-Statistics-Data-and-Systems/Statistics-Trends-and-Reports/ActiveProjectReports/APR_2011_Edition.html*.

m. Expansion of Research Activities Exempt From IRB Review (NPRM at § ____.104(d)(3), (e)(1), (e)(2))

Three proposed exemptions in the NPRM would expand the types of activities that could occur without any IRB review (expedited or full-board). A new exemption at proposed § ____.104(d)(3) covers research involving benign interventions in conjunction with the collection of data from an adult subject through verbal or written responses (including data entry) or video recording if the subject prospectively agrees to the intervention and data collection and at least one of two criteria is met.

A second exemption at proposed § ____.104(e)(1) covers research involving the use of educational tests (cognitive, diagnostic, aptitude, achievement), survey procedures, interview procedures or observation of public behavior (including visual or auditory recording), if the information obtained is recorded in such a manner that human subjects can be identified directly or through identifiers linked to the subjects. A third exemption at proposed § ____.104(e)(2) would permit the secondary research use of identifiable private information originally collected for non-research purposes, so long as notice was provided to the prospective human subjects about the research activities and the identifiable private information is used only for purposes of the specific research for which the investigator or recipient entity obtained the information.

Because the new exemptions at § ____.104(e)(1) and (2) permits investigators to record potentially sensitive information about research subjects in an identifiable form, such activities must comply with the privacy safeguards found at § ____.105 in the proposed Rule. Some of this research may be eligible for expedited review under the current rule, and would now be exempt from even that level of IRB review under the proposed rule. This would result in costs savings associated with IRB submission, review, and approval. In addition, most institutions already have information protection systems and policies in place and are likely to already meet the privacy safeguards of proposed § ____.105.

It is estimated that 6,754 annual reviews of protocols (0.5 percent) would no longer be conducted as a result of these proposed changes. Of these reviews, 2,236 would have undergone convened initial review, 1,004 would have undergone expedited initial review, 2,424 would have undergone convened continuing review, and 1,088 would have undergone expedited continuing review based on the distribution of reviews presented in Table 3.

As required under § ____.104(c), an exemption determination must be made and documented for each of these 6,754 newly exempted studies. It is anticipated that in 50 percent of these studies (3,377 studies), investigators will spend 30 minutes entering information into the HHS-created decision tool in order for that tool to generate an exemption determination. In the remaining 3,377 studies, it is anticipated that investigators will spend 30 minutes preparing and submitting information about the study to an individual able to make exemption determinations (per § ____.104(c)). An individual at the IRB voting member level will spend an estimated 30 minutes per study to make an exemption determination.

The estimated costs to institution officials, IRB administrators, IRB administrative staff, IRB chairs, IRB voting members, and investigators of conducting these reviews are based on the estimates presented in Table 3. The dollar value of their time is calculated by multiplying hours by their estimated 2016–2025 wages and adjusting for overhead and benefits.

The estimated costs associated with new privacy and security standards are presented section III.D.2.o of this RIA. Present value benefits of $70.0 million and annualized benefits of $8.20 million are estimated using a 3 percent discount rate, and present value benefits of $57.2 million and annualized benefits of $8.16 million are estimated using a 7 percent discount rate. Table 16 summarizes the quantified and non-quantified benefits and costs of modifying the exemption categories for research involving adults.

TABLE 16—SUMMARY OF ESTIMATED BENEFITS AND COSTS OF CREATING NEW EXEMPTION CATEGORIES (NPRM AT § ____.104(d)(3), (e)(1), (e)(2)))

Benefits	Present value of 10 years by discount rate (millions of 2013 dollars)		Annualized value over 10 years by discount rate (millions of 2013 dollars)	
	3 Percent	7 Percent	3 Percent	7 Percent
Quantified Benefits				
Reduction in number of reviews	70.0	57.2	8.20	8.16
Non-quantified Benefits				
None				
Costs	3 Percent	7 Percent	3 Percent	7 Percent
Quantified Costs				
None				
Non-quantified Costs				
None				

n. Exemption for the Storage and Maintenance of Biospecimens and IdentPrivate Information for Future, Unspecified Secondary Research Activities After Consent Has Been Sought and Obtained (NPRM at §§ ____.104(f)(1) and ____.111(a)(9))

The NPRM proposes a specific exemption for storage and maintenance of biospecimens (regardless of identifiability) and identifiable private information for future, unspecified secondary research activities after consent has been sought and obtained. The idea behind this exemption is that an institution can store and maintain biospecimens and identifiable private information for future research studies without being required to have a specific repository creation protocol developed, reviewed, and approved by an IRB. To be eligible for the exemption, the institution or an investigator must seek broad consent for the future use of biospecimens and information using the Secretary's broad consent template. Biospecimens and identifiable private information from both the research or non-research contexts may be designated under this exemption for future unspecified research studies. As part of the condition for this proposed exemption, an IRB would be required to do a one-time, limited review of the consent process using the expedited review procedure (as would be required in proposed § __ __.111(a)(9)). The privacy safeguards outlined in proposed § __ __.105 would apply to these activities. Note that if moving the biospecimens or information collected for use in future unspecified research studies is envisioned, as part of the limited IRB review described in § __ __.111(a)(9), an IRB would also need to review the adequacy of the privacy safeguards described in § __ __.105.

Non-quantified benefits of this provision include clearer instructions to the regulated community about the extent to which creating system for storing and maintaining biospecimens and identifiable private information for future, unspecified secondary research activities is governed by this rule. Additionally, by reducing the IRB burden associated with approving this type of activity, this provision also incentivizes the creation of institution-wide, comprehensive systems for the storage and maintenance of biospecimens and identifiable private information for future, unspecified secondary research activities, which would foster more research while remaining respectful of subject autonomy. Because of the benefits to investigators of being eligible for a new exemption if secondary research activities are conducted using biospecimens or identifiable private information maintained or stored according to § __ __.104(f)(1), institutions would be further incentivized to implement and develop such a system. Also note that while FDA is unable to harmonize with the Common Rule on many of the exemptions due to specific requirements in FDA's authorizing statutes, including the § __ __.104(f)(2) exemption, research that is also subject to the FDA regulations would be eligible for this exemption.

Because of the proposal for the rule to cover all biospecimens regardless of identifiability, it is anticipated that a majority of institutions would elect to develop a system for storing and maintaining biospecimens and identifiable private information for future, unspecified secondary research activities as allowed under the proposed exemption at § __ __.104(f)(1). This RIA estimates that 6,428 FWA holding institutions (80 percent) would develop such a mechanism for storing and maintaining biospecimens and identifiable private information for future, unspecified secondary research activities. The RIA anticipates that 1,607 FWA institutions (20 percent) would not develop this type of mechanism, either due to the lower volume of research overall conducted at that institution or because the institution conducts mostly social and behavioral research. At each of the 6,428 institutions where a storage and maintenance schema exemptible under NPRM § __ __.104(f)(1) is developed, it is assumed that an individual at the IRB administrator level would spend two hours at each institution reviewing the consent process through which a subject's broad consent to future research uses of his or her biospecimens or information is sought.

The estimated costs to institution officials, IRB administrators, IRB administrative staff, IRB chairs, IRB voting members, and investigators of conducting these reviews are based on the estimates presented in Table 3. The dollar value of their time is calculated by multiplying hours by their estimated 2016–2025 wages and adjusting for overhead and benefits.

The estimated costs to institution officials, IRB administrators, IRB administrative staff, IRB chairs, IRB voting members, and investigators of conducting these reviews are based on the estimates presented in Table 3. The dollar value of their time is calculated by multiplying hours by their estimated 2016–2025 wages and adjusting for overhead and benefits.

Present value costs of $1.58 million and annualized benefits of $0.19 million are estimated using a 3 percent discount rate, and present value benefits of $1.48 million and annualized benefits of $0.21 million are estimated using a 7 percent discount rate. Table 17 summarizes the quantified and non-quantified benefits and costs of modifying the exemption categories for research involving adults.

TABLE 17—EXEMPTION FOR THE STORAGE AND MAINTENANCE OF BIOSPECIMENS AND IDENTIFIABLE PRIVATE INFORMATION FOR FUTURE, UNSPECIFIED SECONDARY RESEARCH ACTIVITIES AFTER CONSENT HAS BEEN SOUGHT AND OBTAINED (NPRM AT §§ ____.104(f)(1) AND ____.111(a)(9))

Benefits	Present value of 10 years by discount rate (millions of 2013 dollars)		Annualized value over 10 years by discount rate (millions of 2013 dollars)	
	3 Percent	7 Percent	3 Percent	7 Percent
Quantified Benefits				
None				
Non-quantified Benefits				
Fostering research with biospecimens and identifiable private information				
Costs	3 Percent	7 Percent	3 Percent	7 Percent
Quantified Costs				

TABLE 17—EXEMPTION FOR THE STORAGE AND MAINTENANCE OF BIOSPECIMENS AND IDENTIFIABLE PRIVATE INFORMATION FOR FUTURE, UNSPECIFIED SECONDARY RESEARCH ACTIVITIES AFTER CONSENT HAS BEEN SOUGHT AND OBTAINED (NPRM AT §§ ____.104(f)(1) AND ____.111(a)(9))—Continued

Benefits	Present value of 10 years by discount rate (millions of 2013 dollars)		Annualized value over 10 years by discount rate (millions of 2013 dollars)	
	3 Percent	7 Percent	3 Percent	7 Percent
Obtaining limited IRB review of consent process	1.58	1.48	0.19	0.21
Non-quantified Costs				
None				

o. Privacy Safeguards for Biospecimens and Identifiable Private Information (NPRM at §§ ____.105 and ____.115(c))

Increasing research use of genetic information, information obtained from biospecimens, medical records, and administrative claims data has altered the nature of the risks to those whose information is being used in research. The risks related to these types of research are not physical but rather are informational through, for example, the unauthorized release or use of information about subjects. Currently, IRBs evaluate each study with regard to all levels of risk and are expected to determine whether the privacy of subjects and the confidentiality of their information is protected. Under the current Common Rule, IRBs must review each individual study's protection plan to determine whether it is adequate with respect to the informational risks of that study.

The proposed rule would impose a new requirement that institutions and investigators implement appropriate security safeguards for biospecimens and identifiable private information. The purpose of these safeguards is to assure that access to biospecimens and individually identifiable private information is only authorized in appropriate circumstances and that informational risks are managed by applying appropriate safeguards to information and biospecimens. To ensure that the requisite limitations on use and disclosure are met, an institution or investigator can obtain adequate assurances through the use of a written agreement with the recipient of the information or biospecimens. In addition, a new provision is proposed at § ____.115(c) that requires that the institution or IRB retaining IRB records shall safeguard, if relevant, individually identifiable private information contained in those records in compliance with the privacy safeguards proposed at § ____.105.

Under the proposal, the HHS Secretary would develop a set of minimum standards for the protection of information for research outside of the current scope of the HIPAA standards to create an effective and efficient means of implementing appropriate protections for biospecimens and information. This list would be developed in consultation with other Common Rule agencies and would be published in the **Federal Register**.

Consequently, the IRBs would not be required to review the individual plans for safeguarding information and biospecimens for each research study, so long as investigators would adhere to one or the other set of standards. It is anticipated that once IRBs are familiar with standard institutional- and investigator-imposed protections they would become more comfortable with the fact that they need not review every protocol for security standards. In addition, IRBs would not have to review security provisions on a case-by-case basis, which would result in cost savings in terms of time.

It is expected that most research institutions would already have most of these protections in place, especially those institutions that are subject in whole or part to the HIPAA rules. Other fiduciary, legal, and proprietary responsibilities related to obtaining and storing biospecimens are likely to encompass the protections proposed for securing biospecimens. Also note that the envisioned security measures that will appear on the Secretary's List would be less stringent than what many institutions have already implemented. It should also be noted that the NPRM proposal would result in uniform baseline standards for security. Costs associated with developing the Secretary's List in accordance with proposed § ____.105 are accounted for in section III.D.2.a of this RIA.

It is estimated that 803 of the 8,035 institutions with FWAs (10 percent) would need to update their privacy and security standards to comply with the new requirements. At these institutions, institutional officials and institutional legal staff would each spend an estimated 80 hours in 2016 and 20 hours in subsequent years to update and monitor their privacy and security standards. In addition, the RIA estimates that 43,997 of 439,968 investigators (10 percent) would be required to adopt the updated privacy and security standards. These investigators would each spend an 40 hours in 2016 and 10 hours in subsequent years to comply. Based on the estimates presented in Table 3, the dollar value of their time is calculated by multiplying hours by their estimated 2016–2025 wages and adjusting for overhead and benefits. Public comments are requested on these estimates.

Present value costs of $457 million and annualized costs of $53.6 million are estimated using a 3 percent discount rate; present value costs of $347 million and annualized costs of $49.4 million are estimated using a 7 percent discount rate. Table 18 summarizes the quantified and non-quantified benefits and costs to protect information and biospecimens.

TABLE 18—SUMMARY OF ESTIMATED BENEFITS AND COSTS OF PROTECTION OF INFORMATION AND BIOSPECIMENS (NPRM AT §§ ____.105 AND ____.115(c))

Benefits	Present value of 10 years by discount rate (millions of 2013 dollars)		Annualized value over 10 years by discount rate (millions of 2013 dollars)	
	3 Percent	7 Percent	3 Percent	7 Percent
Quantified Benefits				
None				
Non-quantified Benefits				
Improved protection of individually identifiable private information and biospecimens.				
Costs	3 Percent	7 Percent	3 Percent	7 Percent
Quantified Costs	457	347	53.6	49.4
Time for institutions to update and adopt new privacy and security standards.				
Non-quantified Costs				
None				

p. Elimination of Continuing Review of Research under Specific Conditions (NPRM at §§ ____.109(e), (f) and ____.115(a)(3), (8))

The NPRM proposes eliminating continuing review for many minimal risk studies, unless the reviewer explicitly justifies why continuing review would enhance protection of research subjects. For studies initially reviewed by a convened IRB, continuing review would not be required, unless specifically mandated by the IRB, after the study reaches the stage where it involves one or both of the following: (1) Analyzing data (even if it is identifiable private), or (2) accessing follow-up clinical data from procedures that subjects would undergo as part of standard care for their medical condition or disease. If an IRB chooses to conduct continuing review even when these conditions are met, the rationale for doing so must be documented according to a new provision at § ____.115(a)(3).

It is also proposed that continuing review of research eligible for expedited review in accordance with § ____.110 not be required, although an IRB may determine that continuing review of research eligible for expedited review is necessary. When an IRB requires continuing review of such studies, this too must be documented in compliance with a proposed requirement at § ____.115(a)(8).

Requiring continuing review for studies that are minimal risk (and eligible for expedited review at the onset) or that no longer pose greater than minimal risk presents a regulatory burden that does not meaningfully enhance protection of subjects. Further, the requirement takes time from the IRB's review of higher risk studies.

This would result in less time spent by institutions, IRBs, and investigators in terms of time spent preparing for and conducting continuing review. This is a one-time compliance burden in Year 1 for institutions to update their systems to no longer send continuing review reminders to certain investigators. There would be increased recordkeeping requirements, however, for institutions to comply with § ____115(a)(3) and (a)(8). Because we estimate that 90 percent of protocols that previously had to undergo continuing view would no longer need to, there is an overall net benefit. However, 10 percent of studies would require a new recordkeeping component. The benefits in terms of cost savings would begin in year one and extend indefinitely. However, costs would be associated with the requirement that IRBs document cases in which they elect to conduct continuing review when it is not a regulatory requirement.

The RIA estimates that there are 108,873 expedited continuing reviews of protocols annually based on the distribution of reviews presented in Table 3. Of these reviews, the RIA further estimates that 81,546 reviews (75 percent) would not be eliminated by other proposed changes to the Common Rule (such as the modifications proposed at §§ ____.101(b); ____.104(d)(1)–(3), (e)(1), and (f)). It is estimated that 40,773 of these 81,546 reviews (50 percent) would be discontinued and the remaining 40,773 reviews (50 percent) would continue and require documentation of the rationale for doing so. The RIA also estimates that IRB voting members would spend 1 hour per review providing documentation. In addition, administrative staff at each IRB would spend an estimated 10 hours in 2016 updating their communication systems to no longer send continuing review reminders to certain investigators.

The estimated costs to institution officials, IRB administrators, IRB administrative staff, IRB chairs, IRB voting members, and investigators of conducting these reviews are based on the estimates presented in Table 3. The dollar value of their time is calculated by multiplying hours by their estimated 2016–2025 wages and adjusting for overhead and benefits.

Present value benefits of $145 million and annualized benefits of $17.0 million are estimated using a 3 percent discount rate, and present value benefits of $119 million and annualized benefits of $16.9 million are estimated using a 7 percent discount rate. Present value costs of $38.8 million and annualized costs of $4.55 million are estimated using a 3 percent discount rate; present value costs of $31.9 million and annualized costs of $4.54 million are estimated using a 7 percent discount rate. Table 19 summarizes the quantified and non-quantified benefits and costs of the elimination of continuing review of research under specific conditions.

TABLE 19—SUMMARY OF ESTIMATED BENEFITS AND COSTS OF THE ELIMINATION OF CONTINUING REVIEW OF RESEARCH UNDER SPECIFIC CONDITIONS (NPRM AT §§ ____.109(e), (f) AND ____.115(a)(3), (8))

Benefits	Present value of 10 years by discount rate (millions of 2013 dollars)		Annualized value over 10 years by discount rate (millions of 2013 dollars)	
	3 Percent	7 Percent	3 Percent	7 Percent
Quantified Benefits				
Reduction in number of continuing reviews.	145	119	17.0	16.9
Non-quantified Benefits				
None				
Costs	3 Percent	7 Percent	3 Percent	7 Percent
Quantified Costs				
Time to document rationale for conducting continuing review and update IRB communication systems	38.8	31.9	4.55	4.54
Non-quantified Costs				
None				

q. Expedited Review Procedures (NPRM at §§ ____.110 and ____.115(a)(9))

The proposed rule would make minor changes regarding expedited review, to change the default position such that expedited review can occur for studies on the HHS Secretary's list unless the reviewer(s) determine(s) that the study involves more than minimal risk. The NPRM also proposes that, in consultation with other Common Rule departments or agencies, the expedited review categories be reviewed every eight years and amended as appropriate, followed by publication in the **Federal Register** and solicitation of public comment. Finally, there would be a new requirement at proposed § ____.115(a)(9) concerning IRB records that IRBs document the rationale for an expedited reviewer's determination that research appearing on the expedited review list is more than minimal risk (*i.e.,* an override of the presumption that studies on the Secretary's list are minimal risk). Additionally, in order to assist institutions in determining whether an activity is minimal-risk, the NPRM proposes in § ____.102(j) that the Secretary of HHS will maintain guidance that includes a list of activities considered to be minimal risk. The costs associated with developing and maintaining this guidance document are accounted for above in III.D.2.a of this RIA.

The proposed changes to the expedited review procedures are expected to reduce the IRB workload by increasing the number of studies that undergo expedited review rather than convened review. The documentation requirement does not produce additional requirements because IRBs must keep records of determinations regardless. This just stipulates that the reason for an override must be described. However, costs would be associated with the requirement that IRBs document cases in which they elect to conduct convened IRB review when it is not a regulatory requirement.

It is estimated that there are 223,689 convened initial reviews and 242,330 convened continuing reviews of protocols annually based on the distribution of reviews presented in Table 3. Of these 223,689 convened initial reviews, it is estimated that 2,237 reviews (1 percent) are eligible for expedited review because they are in a category of research that appears on the HHS Secretary's list. Of these 2,237 reviews, it is estimated that 1,118 reviews (50 percent) would undergo expedited review and the remaining 1,118 reviews (50 percent) would undergo convened review and require documentation of the rationale for doing so.

Of the 242,330 convened continuing reviews, it is estimated that 2,423 reviews (1 percent) are eligible for expedited review because they are in a category of research that would appear on the Secretary's list. Of these 2,423 reviews, the RIA estimates that 1,212 reviews (50 percent) would undergo convened review and would require documentation of the rationale for doing so. Due to the proposed elimination of continuing review of research under specific conditions (§ ____.109(e) and (f); § ____.115(a)(3) and (a)(8)), the remaining 1,212 reviews (50 percent) would not require review. Of these 1,212 reviews, the RIA estimates that 606 reviews (50 percent) would not occur and the remaining 606 reviews (50 percent) would undergo expedited continuing review and require documentation of the rationale for doing so. The RIA estimates that IRB voting members would spend 1 hour per review providing documentation when required. The cost associated with reviewing and amending the list is accounted for in section III.D.2.a of this RIA.

The estimated costs to institution officials, IRB administrators, IRB administrative staff, IRB chairs, IRB voting members, and investigators of conducting these reviews are based on the estimates presented in Table 3. The dollar value of their time is calculated by multiplying hours by their estimated 2016–2025 wages and adjusting for overhead and benefits.

Present value benefits of $16.8 million and annualized benefits of $1.97 million are estimated using a 3 percent discount rate, and present value benefits of $13.7 million and annualized benefits of $1.95 million are estimated using a 7 percent discount rate. Present value costs of $2.71 million and annualized costs of $0.32 million are estimated using a 3 percent discount rate; present value costs of $2.21 million and annualized costs of $0.32 million are estimated using a 7 percent discount rate. Table 20 summarizes the quantified and non-quantified benefits and costs of the elimination of expedited review procedures.

TABLE 20—SUMMARY OF ESTIMATED BENEFITS AND COSTS OF AMENDING THE EXPEDITED REVIEW PROCEDURES (NPRM AT §§ ____.110 AND ____.115(a)(9))

Benefits	Present value of 10 years by discount rate (millions of 2013 dollars)		Annualized value over 10 years by discount rate (millions of 2013 dollars)	
	3 Percent	7 Percent	3 Percent	7 Percent
Quantified Benefits				
Reduction in number of reviews.	16.8	13.7	1.97	1.95
Non-quantified Benefits				
None	.....	.....	.....	.....
Costs	3 Percent	7 Percent	3 Percent	7 Percent
Quantified Costs				
Time to document rationale for conducting expedited review	2.71	2.21	0.32	0.32
Non-quantified Costs				
None	.....	.....	.....	.....

r. Revised Criteria for IRB Approval of Research (NPRM at § ____.111)

Two changes are proposed in the criteria for IRB approval of research. One pertains to the new requirements proposed at § ____.105 to protect biospecimens and individually identifiable private information used in research. The regulations at § ____.111(a)(7) currently require that in order to approve research covered by this policy, the IRB shall determine that when appropriate, there are adequate provisions to protect the privacy of subjects and to maintain the confidentiality of data. This requirement would be modified to recognize that the requirements at § ____.105 would apply to all non-exempt research (unless the criteria for exemptions are met). The default position should be that if the provisions at § ____.105 are being met, there is no need for additional IRB review of a research study's privacy and confidentiality protections. However, there might be extraordinary cases in which an IRB determines that privacy safeguards above and beyond those called for in § ____.105 are necessary. Therefore, it is proposed that IRBs would be responsible for ensuring there are adequate provisions to protect the privacy of subjects and to maintain the confidentiality of data only if the IRB determines that the protections required in § ____.105 are insufficient.

The second proposed change relates to the new exemption at § ____.104(f)(2) that includes a criterion at (f)(2)(ii) that the exemptions do not apply if the investigator intends to return individual research results to subjects. Thus, a new provision would be added at § ____.111(a)(8) clarifying that IRBs need to review any plan in a research protocol for returning individual research results to subjects and to determine whether it is appropriate. Although many IRBs probably already review plans for return of results, and many studies do not include this feature, it would not be required that IRBs review all projects to determine if there should be a plan.

The RIA estimates that there are 324,187 initial reviews of protocols annually, of which 223,689 involve convened review and 100,498 involve expedited review based on the distribution of reviews presented in Table 3. The RIA estimates that IRBs typically use two primary reviewers for convened review and one primary reviewer for expedited review, and that primary reviewers spend an average of 15 minutes reviewing the security plans for biospecimens or identifiable private information. Of the 324,187 initial reviews, we estimate that 108,062 reviews (33 percent) would include a plan for returning results to subjects and that primary reviewers would spend an average of 15 minutes reviewing these plans. Based on the estimates in Table 3, the dollar value of their time is calculated by multiplying hours by their estimated 2016–2025 wages and adjusting for overhead and benefits.

Present value benefits of $126 million and annualized benefits of $14.8 million are estimated using a 3 percent discount rate, and present value benefits of $89.1 million and annualized benefits of $12.7 million are estimated using a 7 percent discount rate. Present value costs of $66.6 thousand and annualized costs of $7.8 thousand using a 3 percent discount rate; present value costs of $62.3 thousand and annualized costs of $8.9 thousand using a 7 percent discount rate. Table 21 summarizes the quantified and non-quantified benefits and costs of the revised criteria for IRB approval of research.

TABLE 21—SUMMARY OF ESTIMATED BENEFITS AND COSTS OF REVISED CRITERIA FOR IRB APPROVAL OF RESEARCH (NPRM AT § ____.111)

Benefits	Present value of 10 years by discount rate (millions of 2013 dollars)		Annualized value over 10 years by discount rate (millions of 2013 dollars)	
	3 Percent	7 Percent	3 Percent	7 Percent
Quantified Benefits				
Decreased time associated with each review	126	89.1	14.8	12.7
Non-quantified Benefits				
Increased opportunities for research subjects to learn the results of studies in which they participated.				

TABLE 21—SUMMARY OF ESTIMATED BENEFITS AND COSTS OF REVISED CRITERIA FOR IRB APPROVAL OF RESEARCH (NPRM AT § ____.111)—Continued

Benefits	Present value of 10 years by discount rate (millions of 2013 dollars)		Annualized value over 10 years by discount rate (millions of 2013 dollars)	
	3 Percent	7 Percent	3 Percent	7 Percent
Costs	3 Percent	7 Percent	3 Percent	7 Percent
Quantified Costs				
Time to review plans for returning results to subjects	0.07	0.06	0.008	0.009
Non-quantified Costs				
None				

s. Cooperative Research (NPRM at §§ ____.114, ____.103(e), and ____.101(a))

The proposed rule would mandate that all domestic sites in a cooperative study rely upon a single IRB for that study, regardless of the source of funding, unless otherwise required by law (*e.g.,* FDA-regulated device studies). Common Rule funding departments or agencies would also have the authority to determine that use of a single reviewing IRB is not appropriate for a particular study (so long as that decision is documented). This policy would apply regardless of whether the study underwent convened IRB review or expedited review. This proposal only affects the decision about which IRB would be designated as the reviewing IRB for compliance purposes. Related to this is a new provision at § ____.103(e) requiring procedures that the institution and IRB would follow for documenting the institution's reliance on the IRB for oversight and the responsibilities of each entity. Also related to this, a new provision at § ____.101(a) would give Common Rule departments and agencies the explicit authority to enforce compliance directly against IRBs that are not affiliated with an assured institution. In addition, the proposed rule would be modified to remove the current requirement at § ____.103(d) that only with the approval of the department or agency head, an institution participating in a cooperative project may enter into a joint review arrangement, rely upon the review of another IRB, or make similar arrangements for avoiding duplication of effort.

Currently, the choice to have cooperative research reviewed by a single IRB is voluntary under the Common Rule. In practice, most institutions have been reluctant to replace review by their local IRBs with review by a single IRB in part because of OHRP's current practice of enforcing compliance with the Common Rule through the institutions that were engaged in human subjects research, even in circumstances when the regulatory violation is directly related to the responsibilities of an external IRB. Review by multiple IRBs for cooperative research can add bureaucratic complexity to the review process and delay initiation of research projects without evidence that multiple reviews provide additional protections to subjects. Thus, the proposed changes at § ____.101(a) are included in this NPRM to address this concern in anticipation of greater reliance on external IRBs in cooperative research, and to promote less bureaucratic complexity in the review process in multi-site studies.

Ultimately, these revisions are expected to lower costs associated with multiple reviews for investigators, institutions, and IRBs. There may be some cost shifting as certain IRBs take on the role of reviewing IRB; however, these will be offset by savings at other IRBs no longer required to conduct additional reviews of the same research study. Initially, IRBs and institutions will have to draft and revise their policies regarding their reliance on single IRBs. It is expected that over time standardization in agreements will be achieved, and that reliance on single IRBs will be accepted because of their assured inclusion in oversight, which will result in reduced costs associated with multiple reviews and time savings for investigators who no longer must wait for multiple reviews to occur, with subsequent revisions and amendments. Likely, the hours spent here will replace hours spent reviewing and processing a submission that otherwise would be approved by the institution's IRB.

The OHRP database of registered institutions and IRBs shows that there are 8,035 institutions with an FWA. The RIA estimates that these institutions would develop an average of 10 written joint review agreements with other institutions in 2019 prior to the first year of compliance. The RIA further estimates that each agreement would require an average of 10 hours of institution legal staff time and 5 hours of IRB administrator time to complete. The dollar value of their time is calculated by multiplying hours by their estimated 2016 and 2019 wages and adjusting for overhead and benefits.

It is estimated that there are 202,617 annual reviews of multi-site protocols, and an average of 5 reviews per multi-site protocol, implying that there are 40,523 multi-site protocols reviewed each year. Of these protocols, an estimated 36,471 protocols (90 percent) do not involve medical devices; as a result, 4 of every 5 reviews would be eliminated. Accordingly, the RIA estimates that 145,884 annual reviews of protocols would no longer be conducted as a result of these proposed changes. Of these reviews, 48,317 would have undergone convened initial review, 21,708 would have undergone expedited initial review, 52,343 would have undergone convened continuing review, and 23,517 would have undergone expedited continuing review based on the distribution of reviews presented in Table 3.

The estimated costs to institution officials, IRB administrators, IRB administrative staff, IRB chairs, IRB voting members, and investigators of conducting these reviews and based on the estimates presented in Table 3. The dollar value of their time is calculated by multiplying hours by their estimated 2019–2025 wages and adjusting for overhead and benefits.

Present value benefits of $1,103 million and annualized benefits of $129 million are estimated using a 3 percent discount rate, and present value benefits of $849 million and annualized benefits of $121 million are estimated using a 7 percent discount rate. Present value costs of $155 million and annualized costs of $18.1 million are estimated using a 3 percent discount rate; present value costs of $138 million and

annualized costs of $19.7 million are estimated using a 7 percent discount rate. Table 22 summarizes the quantified and non-quantified benefits and costs of cooperative research.

TABLE 22—SUMMARY OF ESTIMATED BENEFITS AND COSTS OF COOPERATIVE RESEARCH (NPRM AT §§ ____.114, ____.103(e), AND ____.101(a))

Benefits	Present value of 10 years by discount rate (millions of 2013 dollars)		Annualized value over 10 years by discount rate (millions of 2013 dollars)	
	3 Percent	7 Percent	3 Percent	7 Percent
Quantified Benefits				
Reduction in number of reviews	1,103	849	129	121
Non-quantified Benefits				
Standardization of human subjects protections when variation among review IRBs is not warranted.				
Costs	3 Percent	7 Percent	3 Percent	7 Percent
Quantified Costs				
Time requirement to develop model reliance agreement and written joint review agreements	155	138	18.1	19.7
Non-quantified Costs				
None				

t. Changes in the Elements of Consent, Including Documentation (NPRM at §§ ____.116(a)(9), (b)(7)–(9), and ____.117(b) in the NPRM)

A new element of consent at § ____.116(a)(9) applies to identifiable private information collected as part of a research activity. When identifiable private information is collected for research purposes, subjects must be provided with a statement describing the extent to which a subject's information will be made non-identified and used in future activities. An investigator must include in a consent form one of two statements:

- A statement that all identifiable information might be removed from the data and the data that is not identifiable could be used for future research studies or distributed to another investigator for future research studies without additional informed consent from the subject, if this might be a possibility; or
- A statement that the subject's data collected as part of the research, from which identifiable information is removed, will not be used or distributed for future research studies.

The addition of the requirement to notify subjects of how their non-identified information might be used is viewed as a measure of respect for subjects, by informing them of possible uses of their information. Potential subjects can always decline to participate in the initial research if they are not willing to consent to the statement provided. This measure addresses concerns about people not being fully informed that their non-identified information could be used for research without their consent. These changes are expected to improve informed consent forms and processes, and ideally result in more informed decisions by prospective research subjects about whether to participate in research. The intent is to create greater transparency and improve the informed consent process. This addition would have to meet the documentation requirements at § ____.117(b).

While this new provision would require investigators to inform prospective subjects of how their non-identified information originally collected for research purposes might be used in future research studies, it is not expected that this change to have a measurable effect on the administrative costs to the research system. Under the current regulations, a majority of investigators do not restrict the future research use of non-identifiable information. Therefore, it is expected that in implementing this new notification requirement, the vast majority of investigators would elect option (1). In addition, under the current regulations, investigators may voluntarily restrict the future research use of non-identifiable information, such as in certain research involving vulnerable populations or a rare disease. We do not expect the new notification requirement to result in an increase in the number of investigators who would include option (2) in their consent forms and processes. When investigators choose to restrict the future research use of non-identifiable information under the current Rules, statements about such restricted future use are generally already included in the consent forms and processes. Therefore, for such research, the notification requirement is not expected to result in any change in practice.

Since this notification requirement is not expected to change investigators' secondary use of non-identifiable information originally collected for research purposes, it is anticipated that investigators and institutions already have systems in place to track any restrictions investigators currently choose to implement. As likely is currently the case, it is anticipated that very few investigators would elect to offer the second option listed above because of the challenges of marking and tracking such decisions. Furthermore, since most investigators will likely elect the first option listed above, it would be reasonable for investigators and institutions to assume that the secondary research use of information would be permissible unless marked otherwise. Therefore, it would not be necessary to routinely track information obtained using the first option.

Three additional elements of consent are proposed in § ____.116(b)(7)–(9). These three require that a subject be informed of the following, when relevant:

- That the subject's biospecimens may be used for commercial profit and whether the subject will or will not share in this commercial profit;
- Whether clinically relevant research results, including individual research results, will be disclosed to subjects, and if so, under what conditions; and

• An option for the subject or the representative to consent, or refuse to consent, to investigators re-contacting the subject to seek additional information or biospecimens or to discuss participation in another research study.

These additional elements of consent are proposed to promote the goal of respect for persons and greater transparency in the research enterprise. Additionally, including the information referenced in these provisions in a consent form will help ensure that prospective subjects are given all information necessary for understanding why one might want to participate (or not) in a research study.

The RIA estimates that there are 246,382 new protocols annually using identifiable information. For each protocol, it is estimated that investigators would spend an average of 15 minutes in 2016 updating consent forms to comply with the new requirements found in the NPRM at § ____.116(a)(9) or (b)(7)–(9). Based on the estimates presented in Table 3, the dollar value of investigators' time is calculated by multiplying hours by their estimated 2016 wages and adjusting for overhead and benefits.

The RIA assumes that no additional investigators would elect to offer the second option at § ____.116(a)(9), and that the investigators who currently offer equivalent options already track the permissible and impermissible uses of information in line with the requirements discussed above. As a result, the RIA estimates that there are no additional costs associated with tracking. Public comment is requested on these assumptions.

Present value costs of $4.55 million and annualized costs of $0.53 million are estimated using a 3 percent discount rate; present value costs of $4.25 million and annualized costs of $0.60 million are estimated using a 7 percent discount rate. Table 23 summarizes the quantified and non-quantified benefits and costs of changes in the basic elements of consent, including documentation.

TABLE 23—SUMMARY OF ESTIMATED BENEFITS AND COSTS OF CHANGES IN THE ELEMENTS OF CONSENT, INCLUDING DOCUMENTATION (NPRM AT §§ ____.116(a)(9), (b)(7)–(9) AND ____.117(b))

Benefits	Present value of 10 years by discount rate (millions of 2013 dollars)		Annualized value over 10 years by discount rate (millions of 2013 dollars)	
	3 Percent	7 Percent	3 Percent	7 Percent
Quantified Benefits				
None				
Non-quantified Benefits				
Improved informed consent forms and processes.				
Costs	3 Percent	7 Percent	3 Percent	7 Percent
Quantified Costs				
Time to update consent forms	4.55	4.25	0.53	0.60
Non-quantified Costs				
None				

u. Obtaining Consent to Secondary Use of Biospecimens and Identifiable Private Information (NPRM at §§ ____.116(c)(1), (d)(1), (d)(4) and ____.117(c)(3))

The NPRM proposes to allow the use of broad consent to secondary research use of biospecimens or identifiable private information for unspecified research purposes. Such broad consent would have specified elements and limitations, and could be collected in both the research and non-research setting.

Given the creation of the exemption for the maintenance and storage of biospecimens and identifiable private information for future, unspecified secondary research activities found in the NPRM at § ____.104(f)(1), it is envisioned that institutions creating these research repositories would need to develop tracking systems to monitor which biospecimens or what information may be used in secondary research by investigators. The Secretary of HHS would publish in the **Federal Register** one or more templates for broad consent (NPRM at § ____.116(d)(1)) that would contain all of the required elements of consent for broad, secondary use consent (NPRM at § ____.116(c)). If investigators or institutions use the consent template without any changes and seek to use the exemption at § ____.104(f)(2), IRB review is not required for these secondary studies, unless IRB review is required by law (*e.g.,* FDA-regulated device studies).

Seeking and obtaining consent to secondary research use of biospecimens and identifiable information is an additional flexibility proposed in the NPRM. However, it is not required. If broad consent has not been sought for the future research use of biospecimens or identifiable private information, then an investigator would need to have his or her project reviewed by an IRB and seek either study-specific consent or a waiver of informed consent under the Common Rule. As discussed in section II.B of this preamble, the NPRM proposes stricter waiver criteria (NPRM at § ____.116(e)(2) and (f)(2)) for biospecimens than for identifiable private information; these strict waiver criteria would apply regardless of whether the biospecimens are readily identifiable to the investigator. These waiver criteria would in effect make secondary research using a biospecimen largely impossible in the absence of obtaining subjects' broad consent for future use of their biospecimens. Because investigators would be required to use the Secretary's template for obtaining broad consent in order to be eligible for the new exemptions proposed in § ____.104(f), it is expected that minimal time would be spent updating consent forms or drafting wholly new consent forms. OHRP would develop one or more Secretary's templates for obtaining broad consent to secondary use of biospecimens or identifiable private information for subsequent use by investigators and institutions. OHRP staff time associated with developing this resource is

accounted for in section III.D.2.a of this RIA.

As discussed earlier in this RIA (section III.D.2.n) it is anticipated that 6,428 FWA holding institutions (80 percent) would store and maintain clinical and non-clinical biospecimens and identifiable private information for unspecified future research studies in the manner prescribed under the new proposed exemption at § ____.104(f)(1).

As also discussed previously, extrapolations from 1999 data[91] suggest that biospecimens are collected from as many as 30 million individuals and are stored each year for both clinical and research purposes. Approximately 9 million individuals' biospecimens (30 percent) are collected for research purposes, and thus consent would be sought in the research context for the secondary use of these biospecimens. For these 9 million individuals per year, an investigator would spend an estimated five minutes per person conducting the consent process specific to seeking broad consent, and the subjects would spend an estimated five minutes engaging in the process of having their broad consent for future research uses of their biospecimens or information sought. This estimate of the investigator's time also includes the time for the investigator to log the information into the appropriate database. The RIA further estimates that investigators would spend 10 minutes of time per protocol updating their study-specific consent form to include the language from the Secretary's consent template.

In the clinical setting, approximately 21 million individuals' biospecimens (70 percent of the estimated 30 million individuals' biospecimens collected each year) are collected for clinical purposes. In the first year that the rule is implemented, as many as 21 million broad, secondary use consent forms could be collected from individuals. The RIA anticipates 10 minutes of a subject's time to engage in the consent process. The RIA further anticipates 10 minutes of an institutional employee's time at the IRB Administrative Staff level to seek consent and put the information in the appropriate tracking system.

The NPRM proposes in § ____.116(c)(1)(ii)(B) that once an individual gives broad consent to use his or her biospecimens in future, unspecified research studies, that consent may cover any biospecimen collected over the course of a 10 year period. Note that an institution may retain and use the biospecimens collected indefinitely. This provision is merely stating that every 10 years an institution must ask people whether or not they may use newly collected biospecimens in research. Given that an institution must seek broad consent from an individual only once over the course of a 10 year period, it is assumed that after the first year the rule is implemented, the number of individuals from whom an institution seeks broad consent will decrease.

To account for this, the RIA assumes that after the first year that the rule is implemented, a fraction of the clinical subjects from whom secondary use consent is sought in year one would be sought in subsequent years. It is anticipated that in year two, secondary use consent would be sought in the clinical context from 10.5 million subjects (50 percent of the number of individuals involved in the year one estimates). It is anticipated that in year three and after, secondary use consent would be sought in the clinical context from approximately 6.3 million subjects each year (30 percent of the number of individuals involved in the year one estimates). As in year one, the RIA assumes that a prospective subject would spend 10 minutes of time undergoing the consent process and that an institutional employee at the IRB Administrative Staff level would spend 10 minutes of time conducting the consent process with an individual and updating the appropriate tracking system.

Note that assumptions are not made about the extent to which institutions will use the tracked broad consent for the use of identifiable private information. While all institutions that conduct research with biospecimens will essentially need to create a research repository to continue that type of work under the NPRM proposals, such is not the case with identifiable private information. Identifiable private information is covered under the NPRM as it is under the current Rule. To that end, a research repository containing identifiable private information is not necessary to the research enterprise. Thus, the RIA notes that institutions likely will elect to store identifiable private information in these repositories, but it is unknown the extent to which institutions will elect to do this and the volume of identifiable private information that might be stored. Therefore, estimates are not provided specifically about the potential costs of obtaining broad consent and tracking the consent for future use of identifiable private information.

The costs of the tracking system associated with an institution-wide secondary use research repository are the design, implementation, and operation of the informatics system that would be required to document and keep up with thousands of consent documents per year. In addition, the institution would have to come up with some system to ''mark'' or otherwise note which biospecimens and pieces of identifiable private information had been consented for use, and which ones had not, to make sure an individual's wishes regarding future use of his or her biospecimens and identifiable private information are carried out. It is estimated that these requirements would impose additional costs to develop or modify existing tracking systems at 80 percent of 8,035 institutions with FWAs. It is estimated that these requirements would require 1.0 database administrator FTEs on average at these institutions. Based on the estimates presented in Table 3, we calculate the dollar value of their time by multiplying hours by their estimated 2016–2025 wages and adjusting for overhead and benefits. Public comment is requested on these estimates.

Present value costs of $12,245 million and annualized costs of $1,435 million are estimated using a 3 percent discount rate; present value costs of $8,697 million and annualized costs of $1,238 million are estimated using a 7 percent discount rate. Table 24 summarizes the quantified and non-quantified benefits and costs of obtaining consent to secondary use of biospecimens and identifiable private information.

[91] Eiseman, E., Haga, S. (1999). *Handbook of Human Tissue Sources: A National Resource of Human Tissue Samples.* Washington, DC: RAND Corporation.

TABLE 24—SUMMARY OF ESTIMATED BENEFITS AND COSTS OF OBTAINING CONSENT TO SECONDARY USE OF BIOSPECIMENS AND IDENTIFIABLE PRIVATE INFORMATION (NPRM AT §§ ____.116(c)(1), (d)(1), (d)(4) AND ____.117(c)(3))

Benefits	Present value of 10 years by discount rate (millions of 2013 dollars)		Annualized value over 10 years by discount rate (millions of 2013 dollars)	
	3 Percent	7 Percent	3 Percent	7 Percent
Quantified Benefits				
None				
Non-quantified Benefits				
Improved informed consent forms and processes, and reduction in time that would have been spent seeking and obtaining consent for secondary research use; retaining identifiers in research; better ensuring of the availability of biospecimens for future research activities.				
Costs	3 Percent	7 Percent	3 Percent	7 Percent
Quantified Costs				
Time to update consent forms, document, and submit permissible and impermissible secondary uses of data; develop and maintain tracking system	12,245	8,697	1,435	1,238
Non-quantified Costs				
None				

v. Elimination of Requirement To Waive Consent in Certain Subject Recruitment Activities (NPRM at § ____.116(g))

The proposed rule would allow an IRB to approve a research proposal in which investigators obtain identifiable private information without individuals' informed consent for the purpose of screening, recruiting, or determining the eligibility of prospective human subjects of research, through oral or written communication or by accessing records, if the research proposal includes appropriate provisions to protect the privacy of those individuals and to maintain the confidentiality of the identifiable private information.

This addresses concerns that the current regulations require an IRB to determine that informed consent can be waived under the current § ____.116(d) before investigators may record identifiable private information for the purpose of screening, recruiting, or determining the eligibility of prospective subjects for a research study, provided that the research proposal includes an assurance that the investigator would meet the requirements for protecting the information as described in proposed § ____.105. The current requirement is viewed as burdensome and unnecessary to protect subjects, and is inconsistent with FDA's regulations, which do not require a waiver of consent for such recruitment activities.

This should result in some time and cost savings for both investigators and IRBs, but it would likely be small. The savings would come from IRBs no longer needing to consider whether informed consent can be waived for such preparatory-to-research activities. Savings would accrue for investigators who can proceed with such activities in less time.

The RIA estimates that 1,621 annual initial reviews of protocols (0.5 percent) involve a waiver of consent for recruitment activities that would not be required as a result of these proposed changes. Of these reviews, 1,118 would have undergone convened initial review and 502 would have undergone expedited initial review based on the distribution of reviews presented in Table 3. It is estimated that investigators spend an average of 15 minutes requesting a waiver of consent for recruitment activities when they submit a protocol for initial review. It is further estimated that IRBs typically use two primary reviewers for convened review and one primary reviewer for expedited review, and that primary reviewers spend an average of 15 minutes determining whether informed consent can be waived. Based on the estimates in Table 3, the dollar value of their time is calculated by multiplying hours by their estimated 2016–2025 wages and adjusting for overhead and benefits.

Present value benefits of $1.21 million and annualized benefits of $0.14 million are estimated using a 3 percent discount rate, and present value benefits of $0.85 million and annualized benefits of $0.12 million are estimated using a 7 percent discount rate. Table 25 summarizes the quantified and non-quantified benefits and costs of eliminating the requirement to waive consent in certain subject recruitment activities.

TABLE 25—SUMMARY OF ESTIMATED BENEFITS AND COSTS OF ELIMINATION OF REQUIREMENT TO WAIVE CONSENT IN CERTAIN SUBJECT RECRUITMENT ACTIVITIES (NPRM AT § ____.116(g))

Benefits	Present value of 10 years by discount rate (millions of 2013 dollars)		Annualized value over 10 years by discount rate (millions of 2013 dollars)	
	3 Percent	7 Percent	3 Percent	7 Percent
Quantified Benefits				
Decreased time associated with review	1.21	0.85	0.14	0.12
Non-quantified Benefits				
None				

TABLE 25—SUMMARY OF ESTIMATED BENEFITS AND COSTS OF ELIMINATION OF REQUIREMENT TO WAIVE CONSENT IN CERTAIN SUBJECT RECRUITMENT ACTIVITIES (NPRM AT § ____.116(g))—Continued

Benefits	Present value of 10 years by discount rate (millions of 2013 dollars)		Annualized value over 10 years by discount rate (millions of 2013 dollars)	
	3 Percent	7 Percent	3 Percent	7 Percent
Costs	3 Percent	7 Percent	3 Percent	7 Percent
Quantified Costs				
None				
Non-quantified Costs				
None				

w. Requirement for Posting of Consent Forms for Common Rule Agency-Supported Clinical Trials (NPRM at § ____.116(h))

A new provision would require that investigators or institutions post a copy of the final version of the consent form for each clinical trial conducted or supported by HHS on a publicly available federal Web site that would be established as an archive for such consent forms. The name of the clinical trial and information about whom to contact for additional information must be published with the consent form. The consent form must be published on the federal Web site within 60 days after the trial is closed to recruitment.

It is recognized that certain information contained in an informed consent form is protected from disclosure under the Freedom of Information Act, the Trade Secrets Act, and/or FDA implementing regulations, and, therefore all informed consent forms for FDA-regulated trials covered by this requirement would be subject to redaction before being posted.

It is believed that public posting of consent forms would increase transparency, enhance confidence in the research enterprise, increase accountability, and inform the development of future consent forms, possibly resulting in future savings in time for investigators developing consent forms.

It is expected that the Federal Web site would enable consent documents to be easily uploaded. Additional costs to the government would involve managing and maintaining the archive.

According to queries of *clinicaltrials.gov*, there are an estimated 5,270 clinical trials conducted or supported by Common Rule agencies, of which an estimated 575 are regulated by provisions in the Federal Food, Drug, and Cosmetic (FD&C) Act and Trade Secrets Act based on the information presented in Table 3. For the purpose of this analysis, it is assumed that each clinical trial is associated with one consent form that must be submitted to the HHS system by an investigator. The RIA estimates that investigators would spend an average of 15 minutes submitting each consent form. In addition, for the 575 clinical trials regulated by provisions in the FD&C Act and Trade Secrets Act, it is estimated that investigators would spend an average of 30 minutes redacting information before submission.

In addition, submitted consent forms must be reviewed and made accessible to persons with disabilities in compliance with Section 508 Amendment to the Rehabilitation Act of 1973. We estimate that each consent form contains an average of 10 pages and that 508-compliance costs an average of $30 per page. Based on the estimates presented in Table 3, the dollar value of their time is calculated by multiplying hours by their estimated 2016–2025 wages and adjusting for overhead and benefits.

Present value costs of $14.6 million and annualized costs of $1.71 million are estimated using a 3 percent discount rate; present value costs of $10.4 million and annualized costs of $1.49 million are estimated using a 7 percent discount rate. Table 26 summarizes the quantified and non-quantified benefits and the requirement for posting of consent forms for HHS-supported clinical trials.

TABLE 26—SUMMARY OF ESTIMATED BENEFITS AND COSTS OF REQUIREMENT FOR POSTING OF CONSENT FORMS FOR COMMON RULE AGENCY-SUPPORTED CLINICAL TRIALS (NPRM AT § ____.116(h))

Benefits	Present value of 10 years by discount rate (millions of 2013 dollars)		Annualized value over 10 years by discount rate (millions of 2013 dollars)	
	3 Percent	7 Percent	3 Percent	7 Percent
Quantified Benefits				
None				
Non-quantified Benefits				
Increase transparency of HHS-supported clinical trials and inform the development of new consent forms.				
Costs	3 Percent	7 Percent	3 Percent	7 Percent
Quantified Costs				
Development and management of website, and preparation and submission of consent forms for posting	14.6	10.4	1.71	1.49
Non-quantified Costs				
None				

x. Alteration in Waiver for Documentation of Informed Consent in Certain Circumstances (NPRM at § ____.117(c)(1)(iii))

A new provision would be added allowing a waiver of the requirement to obtain a signed informed consent form if the subjects are members of a distinct cultural group or community for whom signing documents is not the norm. This would be allowed only if the research presents no more than minimal risk of harm to subjects and provided there is an appropriate alternative method for documenting that informed consent was obtained.

Under the current Rule IRBs may waive the requirement for the investigator to obtain a signed consent form for some or all subjects. The current criteria for such a waiver may not be flexible enough for dealing with a variety of circumstances, such as when federally sponsored research that is conducted in an international setting where, for example, cultural or historical reasons suggest that signing documents may be viewed as offensive and problematic.

This should not involve costs as its intent is to improve the informed consent process by providing more flexibility regarding the documentation of consent, an ethical gain, while reducing administrative requirements for investigators and research subjects in specific circumstances.

Benefits and costs of this new provision are not quantified. Table 27 summarizes the non-quantified benefits and costs of alteration in waiver for documentation of informed consent in certain circumstances.

TABLE 27—SUMMARY OF ESTIMATED BENEFITS AND COSTS OF ALTERATION IN WAIVER FOR DOCUMENTATION OF INFORMED CONSENT IN CERTAIN CIRCUMSTANCES (NPRM AT § ____.117(c)(1)(iii))

Benefits	Present value of 10 years by discount rate (millions of 2013 dollars)		Annualized value over 10 years by discount rate (millions of 2013 dollars)	
	3 Percent	7 Percent	3 Percent	7 Percent
Quantified Benefits				
None				
Non-quantified Benefits				
Improved informed consent process for distinct cultural groups and communities.				
Costs	3 Percent	7 Percent	3 Percent	7 Percent
Quantified Costs				
None				
Non-quantified Costs				
None				

E. Sensitivity Analysis

The total estimated costs of the proposed changes to the Common Rule are sensitive to assumptions regarding consent to secondary use of biospecimens and information. The RIA estimates that 60 percent of institutions with an assurance would implement a tracking system. Those institutions would require 1.0 FTEs on average to develop and maintain a tracking system. The sensitivity of estimated costs to these baseline assumptions is analyzed by calculating costs under alternative assumptions. That these institutions could instead require 0.75 FTEs or 1.25 FTEs on average to develop and maintain a tracking system is considered. That 50 percent or 70 percent of assurance holding institutions could implement such a tracking system (rather than 60 percent) is also considered. Table 28 reports present value costs using a 3 percent discount rate for these alternative and baseline assumptions.

TABLE 28—ESTIMATED PRESENT VALUE COSTS USING A 3 PERCENT DISCOUNT RATE (MILLIONS OF 2013 DOLLARS) OF COSTS OF OBTAINING CONSENT TO SECONDARY USE OF BIOSPECIMENS AND IDENTIFIABLE PRIVATE INFORMATION USING BASELINE AND ALTERNATIVE ASSUMPTIONS

FTEs required at each institution	Percentage of institutions that implement a tracking system		
	70 percent	80 percent	90 percent
0.75 FTEs	8,700	9,666	10,633
1.00 FTEs	10,956	12,245	13,534
1.25 FTEs	13,212	14,823	16,435

F. Alternative Approaches to the Definition of Human Subject (NPRM at § ____.102(e)) and Related Provisions

Two alternative approaches for the treatment of biospecimens under the proposed rule were considered. These alternative proposals centered on concerns about potential identifiability of biospecimens and data derived from biospecimens.

Alternative Proposal A: Expand the Definition of ''Human Subject'' to Include Whole Genome Sequencing (WGS)

Under Alternative Proposal A, the regulations at proposed § ____.102(e) would be amended to expand the

definition of human subjects to include more specifically whole genome sequencing data, or any part of the data generated as a consequence of whole genome sequencing, regardless of the individual identifiability of specimens used to generate such data. Investigators would not be allowed to remove identifiers from specimens or data to conduct whole genome sequencing without obtaining informed consent or a waiver of consent, because obtaining whole genome sequencing data about an individual would in and of itself cause the individual to meet the definition of a human subject. Written consent would generally be required for such activities.

This requirement would not apply to specimens and information already collected at the time the final rule is published.

Recent developments have made it possible to use whole genome sequencing information to re-identify non-identified data. Thus, even if such information is not ''individually identifiable'' (per the current Rule's standard of identifiability) it is appropriate to expand the definition of human subjects research in this way to afford individuals who are the subjects of such research the same protections as those given to the subjects of research using identifiable information or specimens. Therefore, it is anticipated that this change would increase protections for subjects of whole genome sequencing research. It would also increase the volume of studies for which investigators must seek and document informed consent, unless more stringent waiver criteria were met, and institutions will have to track the consent status of specimens and data. In addition, IRBs would have to review these studies unless the research meets the new proposed exemption in proposed § ____.104(f)(2).

It is estimated that there are 300 studies using whole genome sequencing data that are not subject to oversight by either the Common Rule or FDA regulations. This RIA estimates that under this alternative, 90 percent of these studies (270) would be eligible for the exemption proposed in § ____.104(f)(2). For the remaining 30 studies, it is anticipated that these would not be eligible for the exemption, and would require full IRB review. As required under § ____.104(c), an exemption determination would be made and documented for each of the 270 exemptible whole genome sequencing studies. It is anticipated that in 50 percent of these studies (135 studies), investigators will spend 30 minutes entering information into the HHS-created decision tool in order for that tool to generate an exemption determination. In the remaining 135 studies, it is anticipated that investigators will spend 30 minutes preparing and submitting information about the study to an individual able to make exemption determinations (per § ____.104(c)). An individual at the IRB voting member level will spend an estimated 30 minutes per study to make an exemption determination.

In the absence of the proposed exempt category at § ____.104(f)(2), we estimate that in 2016 all 300 of these studies would undergo convened initial review. In subsequent years, an estimated 144 protocols would undergo convened initial review, 108 would undergo convened continuing review, and 48 would undergo expedited continuing review, based on the distribution of reviews presented in Table 3.

The estimated costs to institution officials, IRB administrators, IRB administrative staff, IRB chairs, IRB voting members, and investigators of conducting these reviews are based on the estimates presented in Table 3. The dollar value of their time is calculated by multiplying hours by their estimated 2016–2025 wages and adjusting for overhead and benefits.

For Alternative Proposal A, present value costs of $0.57 million and annualized costs of $0.07 million are estimated using a 3 percent discount rate; and present value costs of $0.47 million and annualized costs of $0.07 million are estimated using a 7 percent discount rate. Table 29 summarizes the quantified and non-quantified benefits and costs of amending the definition of human subject.

TABLE 29—SUMMARY OF ESTIMATED BENEFITS AND COSTS OF THE ALTERNATIVE PROPOSAL A FOR MODIFYING THE DEFINITION OF HUMAN SUBJECT (NPRM AT § ____.102(e))

Benefits	Present value of 10 years by discount rate (millions of 2013 dollars)		Annualized value over 10 years by discount rate (millions of 2013 dollars)	
	3 Percent	7 Percent	3 Percent	7 Percent
Quantified Benefits				
None				
Non-quantified Benefits				
Ensuring human subjects are protected in whole genome sequencing research not currently subject to oversight.				
Costs	3 Percent	7 Percent	3 Percent	7 Percent
Quantified Costs				
Increase in number of reviews	0.57	0.47	0.07	0.07
Non-quantified Costs				
Time to obtain consent for activities involving whole genome sequencing				

Alternative Proposal B: Classifying Certain Biospecimens Used in Certain Technologies as Meeting the Criteria for ''human subject''

Under Alternative Proposal B, the regulations at proposed § ____.102(e) would be expanded to include biospecimens used in a technology capable of producing biologically unique information about a subject as well as the biologically unique information derived from a biospecimen. Only those technologies specifically listed on a newly created Secretary's List would be considered to have met this definition. For example, if whole genome sequencing was a technology included on the Secretary's List, then activities where a biospecimen (regardless of the investigator's ability to readily identify the person from whom the biospecimen was collected) was used in whole

genome sequencing research would be subject to the rules. Additionally, activities involving the information generated from a biospecimen used in a technology that appeared on this Secretary's List (regardless of the investigator's ability to readily identify a subject) would also fall under these regulations. Information derived from a technology appearing on the Secretary's List described above would be referred to as ''bio-unique'' information.

This expansion would modestly increase the studies encompassed under the rule. This estimate is based on what is known about whole genomic research technologies that results in genome sequencing data (including DNA and RNA sequence data) that is unique to a single individual. It is estimated that there are 898 genomic research studies not currently subject to oversight that result in genome sequencing data unique to a single individual.

One of the primary objectives of the NPRM has been to make the strength of protections commensurate with the level of risks of the research, and by doing so reduce unnecessary administrative burdens on research. That objective has been viewed as being particularly relevant to research involving only secondary use of biospecimens and data, which is relatively low-risk if appropriate protections of privacy and confidentiality are in place. Alternative Proposal B targets activities involving biospecimens where concerns about information risks indicate that additional regulatory oversight for these studies is appropriate.

When the proposed exemption category at § ____.104(f)(2) is considered, this RIA estimates that under Alternative Proposal B, 808 studies (90 percent) would be eligible for exemption. For the remaining 89 studies, it is anticipated that these would not satisfy the § ____.104(f)(2) requirements and would require full IRB review.

As required under § ____.104(c), an exemption determination would be made and documented for each of the 808 exemptible genomic research studies described above. It is anticipated that in 50 percent of these studies (404 studies), investigators will spend 30 minutes entering information into the HHS-created decision tool in order for that tool to generate an exemption determination. In the remaining 404 studies, it is anticipated that investigators will spend 30 minutes preparing and submitting information about the study to an individual able to make exemption determinations (per § ____.104(c)). An individual at the IRB voting member level will spend an estimated 30 minutes per study to make an exemption determination.

In the absence of the proposed exempt category of research at § ____.104(f)(1), the RIA estimates that as a result of the proposed expansion to the definition of human subject, all 898 of these studies would undergo convened initial review. In subsequent years, an estimated 431 protocols will undergo convened initial review, 322 will undergo convened continuing review, and 145 will undergo expedited continuing review based on the distribution of reviews presented in Table 3.

The estimated costs to institution officials, IRB administrators, IRB administrative staff, IRB chairs, IRB voting members, and investigators of conducting these reviews are based on the estimates presented in Table 3. The dollar value of their time is calculated by multiplying hours by their estimated 2016–2025 wages and adjusting for overhead and benefits.

For Alternative B, present value costs of $1.69 million and annualized costs of $0.20 million are estimated using a 3 percent discount rate; present value costs of $1.39 million and annualized costs of $0.20 million are estimated using a 7 percent discount rate. Table 30 summarizes the quantified and non-quantified benefits and costs of amending the definition of human subject.

TABLE 30—SUMMARY OF ESTIMATED BENEFITS AND COSTS OF THE ALTERNATIVE PROPOSAL B FOR MODIFYING THE DEFINITION OF HUMAN SUBJECT (NPRM AT § ____.102(e))

Benefits	Present value of 10 years by discount rate (millions of 2013 dollars)		Annualized value over 10 years by discount rate (millions of 2013 dollars)	
	3 Percent	7 Percent	3 Percent	7 Percent
Quantified Benefits				
None				
Non-quantified Benefits				
Ensuring that informational risks are minimized in research activities involving technologies capable of producing bio-unique information.				
Costs	3 Percent	7 Percent	3 Percent	7 Percent
Quantified Costs				
Increase in number of reviews	1.69	1.39	0.20	0.20
Non-quantified Costs				
Time to obtain consent for activities involving the generation or use of bio-unique information.				

G. Regulatory Flexibility Analysis

As discussed above, the RFA requires agencies that issue a regulation to analyze options for regulatory relief of small entities if a rule has a significant impact on a substantial number of small entities. HHS considers a rule to have a significant economic impact on a substantial number of small entities if at least 5 percent of small entities experience an impact of more than 3 percent of revenue.

We calculate the costs of the proposed changes to the Common Rule to institutions with an FWA over 2016–2025 and then subtract the cost savings to these institutions over the same period. The estimated average annualized net cost to institutions with an FWA is $153,671 using a 3 percent discount rate. The U.S. Small Business Administration establishes size standards that define a small entity. According to these standards, colleges, universities, and professional schools with revenues below $27.5 million and hospitals with revenues below $38.5 million are considered small entities. It is not anticipated that a majority of

institutions with an FWA are in one of these categories.

IV. Environmental Impact

We have determined under 21 CFR 25.30(k) that this action is of a type that does not individually or cumulatively have a significant effect on the human environment. Therefore, neither an environmental assessment nor an environmental impact statement is required.

V. Paperwork Reduction Act

This proposed rule contains collections of information that are subject to review and approval by the Office of Management and Budget (OMB) under the Paperwork Reduction Act (PRA), as amended (44 U.S.C. 3501–3520). A description of these provisions is given in this document with an estimate of the annual reporting and recordkeeping burden.

We invite comments on these topics: (1) The accuracy of the estimate of burden of the proposed collection of information; (2) ways to enhance the quality, utility, and clarity of the information to be collected; and, (3) ways to minimize the burden of the collection of information on respondents, including through the use of automated collection techniques, when appropriate, and other forms of information and technology.

Title: Federal Policy for the Protection of Human Subjects.

Description: In this document is a discussion of the regulatory provisions we believe are subject to the PRA and the probable information collection burden associated with these provisions. In general, the following actions trigger the PRA: (i) Reporting; (ii) Disclosure; (iii) Recordkeeping.

Description of Respondents: The reporting and recordkeeping requirements in this document are imposed on Institutions, Institutional Review Boards, and Investigators involved in human subjects research conducted or supported or otherwise subject to regulation by any Federal department or agency that takes administrative action that makes the policy applicable to such research.

§ ____.101. To what does this policy apply (OMB Control No. 0990–0260)

Section ____.101 is being amended to place unaffiliated Institutional Review Boards (IRBs) within the realm of entities to which the policy applies as described in § ____.101(a) . This new provision gives Common Rule departments and agencies explicit authority to enforce compliance directly against IRBs that are not affiliated with an assured institution. This change should encourage institutions to more willingly rely on qualified unaffiliated IRBs for cooperative research, as is required under the proposed changes at § ____.114. Burden estimates are included below in § ____.114 summary.

Section ____.101 is also being amended to extend the regulations to cover clinical trials conducted at an institution in the United States that receives federal support from a Common Rule department or agency for non-exempt human subjects research, regardless of the funding source of the trial as described in § ____101(a)(2). Extension of the regulations would not apply to clinical trials already regulated by FDA. We estimate that there are 1,399 clinical trials currently not subject to oversight by either the Common Rule or FDA regulations. We estimate that in 2016 all 1,399 of these clinical trials will undergo convened initial review. In subsequent years, we estimate that 672 protocols will undergo convened initial review, 502 will undergo convened continuing review, and 225 will undergo expedited continuing review. We estimate the burden to institution officials, IRB administrators, IRB administrative staff, IRB chairs, IRB voting members, and investigators of conducting these reviews (24 hours per protocol) based on the estimates presented in Table 3 of section III of the preamble.

§ ____.103. Assuring Compliance With This Policy—Research Conducted or Supported by Any Federal Department or Agency (OMB Control No. 0990–0260)

Section ____.103 is being amended, at § ____.103(e), to require that for non-exempt research involving human subjects covered by this policy that takes place at an institution in which IRB oversight is conducted by an unaffiliated IRB that is not operated by the institution, the institution and the organization operating the IRB shall establish and follow procedures for documenting the institution's reliance on the IRB for oversight of the research and the responsibilities that each entity will undertake to ensure compliance with the requirements of this policy (*e.g.,* in a written agreement between the institution and the IRB, or by implementation of an institution-wide policy directive providing the allocation of responsibilities between the institution and an IRB that is not affiliated with the institution). Burden estimates are included below in § ____.114.

§ ____.104 Exempt Research (OMB Control No. 0990–0260)

Section ____.104 is being proposed, as described in § ____.104(c), to require federal departments and agencies to develop a decision tool to assist in exemption determinations. Under the proposed rule, unless otherwise required by law, exemption determinations may be made by an individual who is knowledgeable about the exemption categories and who has access to sufficient information to make an informed and reasonable determination, or by the investigator or another individual at the institution who enters accurate information about the proposed research into the decision tool, which would provide a determination as to whether the study is exempt. If the tool is used, further assessment or evaluation of the exemption determination is not required. Burden estimates are included below in § ____.115(a)(11).

Section ____.104 is being proposed, as described in § ____.104(d)(2), to require each federal department or agency conducting or supporting the research or demonstration projects exempted under § ____.104(d), to establish on a publicly accessible federal Web site or in such other manner as the department or agency head may prescribe, a list of the research and demonstration projects that the federal department or agency conducts or supports under this provision. The research or demonstration project must be published on this list prior to or upon commencement of the research. We estimate that 4,377 exempt research and demonstration studies will be posted to the Web site annually, and that the information will be submitted to the Web site by individuals at the IRB administrative staff level, an estimate of 1.82 person-hours per protocol (7966.14 burden hours).

§ ____.105 Protection of Biospecimens and Identifiable Private Information, (OMB Control No. 0990–0260)

Section ____.105 is being proposed, as detailed in § ____.105(a), to require institutions and investigators conducting research subject to the Common Rule, or that is exempt under §§ ____.104(e) or (f) to implement and maintain reasonable and appropriate safeguards to protect biospecimens, or identifiable private information they collect, store or use for research. The Secretary of HHS will establish and publish a list of specific measures that the institution or investigator may implement that will be deemed to satisfy the requirement for reasonable

and appropriate safeguards. The list will be evaluated as needed, but at least every 8 years, and amended, as appropriate, after consultation with other federal departments and agencies. Institutions and investigators may choose either to apply the safeguards identified by the Secretary as necessary to protect the security or integrity of and limit disclosure of biospecimens and electronic and non-electronic identifiable private information or to apply safeguards that meet the standards in 45 CFR 164.308, 164.310, 164.312, and 45 CFR 164.530(c). For federal departments and agencies that conduct research activities that is or will be maintained on information technology that is subject to and in compliance with section 208(b) of the E-Government Act of 2002, 44 U.S.C. 3601 *et seq.,* if all of the information collected, used, or generated as part of the activity will be maintained in systems of records subject to the Privacy Act of 1974, 5 U.S.C. 552a, and the research will involve a collection of information subject to the Paperwork Reduction Act of 1995, 44 U.S.C. 3501 *et seq.,* these research activities automatically will be considered in compliance with the Secretary's reasonable and appropriate safeguards standards, unless or until any additional safeguards are identified by the Secretary of HHS.

We estimate that 803 of the 8,035 institutions with FWAs (10 percent) will be required to update their privacy and security standards to comply with the new requirements. At these institutions, we estimate that institutional officials and institutional legal staff will each spend 80 hours in 2016 and 20 hours in subsequent years to update and monitor their privacy and security standards. In addition, we estimate that 43,997 of 439,968 investigators (10 percent) will be required to adopt the updated privacy and security standards. We estimate that these investigators will each spend 40 hours in 2016 and 10 hours in subsequent years to do so.

§ ____.111 Criteria for IRB Approval of Research, (OMB Control No. 0990–0260)

Section ____.111 is being amended at § ____.111(a)(8) to add a new requirement that if the investigator proposes a research plan for returning relevant results to subjects, then the IRB must determine that the plan is appropriate. We estimate that there are 324,187 initial reviews of protocols annually. Of the 324,187 initial reviews, we estimate that 108,062 reviews (33 percent) will include a plan for returning results to subjects and that primary reviewers will spend an average of 15 minutes reviewing these plans.

§ ____.114 Cooperative Research (OMB Control No. 0990–0260)

Section ____.114 is being amended, as described in § ____.114(b)(1) to require any institution located in the United States (U.S.) that is engaged in cooperative research to rely upon approval by a single IRB for that portion of the research conducted in the U.S. As described in § ____.114(b)(2), cooperative research for which more than single IRB review is required by law (*e.g.,* FDA-regulated device studies); or research for which the federal department or agency supporting or conducting the research determines and documents that the use of a single IRB is not appropriate for the particular study need not comply with this requirement. The OHRP database of registered institutions and IRBs shows that there are 8,035 institutions with an FWA. We estimate that these institutions will develop an average of 10 written joint review agreements with other institutions in 2018 prior to the first year of compliance. We estimate that each agreement will require an average of 10 hours of institution legal staff time and 5 hours of IRB administrator time to complete.

§ ____.115 IRB Records (OMB Control No. 0990–0260)

Section ____.115 is being amended, in § ____.115(a)(8), to require the rationale for requiring continuing review for research that otherwise would not require continuing review as described in § ____.109(f)(1).

We estimate that there are 108,873 expedited continuing reviews of protocols annually based on the distribution of reviews presented in Table 3 of the Regulatory Impact Analyses section of the preamble. Of these reviews, we estimate that 81,546 reviews (75 percent) will not be eliminated by other proposed changes to the Common Rule at §§ ____.101(b), ____.104(d)(1)–(3), ____.104(e)(1). We estimate that 40,773 of these 81,546 reviews (50 percent) will be discontinued and the remaining 40,773 reviews (50 percent) will continue and require documentation of the rationale for doing so. We estimate that IRB voting members will spend 1 hour per review providing documentation. In addition, we estimate that administrative staff at each IRB (total of 3,499 IRBs) will spend 10 hours in 2016 updating their communication systems to no longer send continuing review reminders to certain investigators.

Section ____.115 is being amended at § ____.115(a)(9) to require that the rationale for an expedited reviewer's determination that research appearing on the expedited list described in § ____.111(b)(1)(i) is more than minimal risk (*i.e.,* an override of the presumption that studies on the Secretary's list are minimal risk).

We estimate that there are 223,689 convened initial reviews and 242,330 convened continuing reviews of protocols annually based on the distribution of reviews presented in Table 3 of the Regulatory Impact Analyses section of the preamble. Of these 223,689 convened initial reviews, we estimate that 2,237 reviews (1 percent) are eligible for expedited review because they are in a category of research that appears on the Secretary's list. Of these 2,237 reviews, we estimate that 1,118 reviews (50 percent) will undergo expedited review and the remaining 1,118 reviews (50 percent) will undergo convened review and require documentation of the rationale for doing so.

Of the 242,330 convened continuing reviews, we estimate that 2,423 reviews (1 percent) are eligible for expedited review because they are in a category of research that appears on the HHS Secretary's list. Of these 2,423 reviews, we estimate that 1,212 reviews (50 percent) will undergo convened review and will require documentation of the rationale for doing so. Due to the proposed elimination of continuing review of research under specific conditions (§§ ____.109(f); ____.115(a)(3), (8)), the remaining 1,212 reviews (50 percent) will not require review. Of these 1,212 reviews, we estimate that 606 reviews (50 percent) will not occur and the remaining 606 reviews (50 percent) will undergo expedited continuing review and require documentation of the rationale for doing so. We estimate that IRB voting members will spend 1 hour per review providing documentation when required.

Section____.115 is being amended, at § ____.115(a)(10) to require the written agreement between an institution and an external IRB specifying the responsibilities that each entity will undertake to ensure compliance with the requirements described in § ____.103(e).

Table 3 of section III of the preamble shows that there are 5,164 FWA-holding institutions without an IRB and 2,871 FWA-holding institutions with an IRB. We assume that the 5,164 FWA-holding institutions without an IRB have an average of 1 IRB authorization agreement that would need to be

modified as a result of the new requirements for agreements between institutions and external IRBs in 2016. In addition, we assume that the 2,871 FWA-holding institutions with an IRB have an average of 0.20 IRB authorization agreements that would need to be modified in 2016. We estimate that each agreement will require an average of 10 hours of institution legal staff time and 5 hours of IRB administrator time to complete.

Section ____.115, is being amended, in § ____.115(a)(11), to require records relating to exemption determinations as described in § ____.104(c). As part of this new requirement, OHRP will create an interactive exemption determination tool. We estimate that 6,754 annual reviews of protocols would no longer be conducted as a result of proposed changes under § ____.104. As required under § ____.104(c), an exemption determination must be made and documented for each of these 6,754 newly exempted studies. It is anticipated that in 50 percent of these studies (3,377 studies), investigators will spend 30 minutes entering information into the HHS-created decision tool in order for that tool to generate an exemption determination. In the remaining 3,377 studies, it is anticipated that investigators will spend 30 minutes preparing and submitting information about the study to an individual able to make exemption determinations (per § ____.104(c)). An individual at the IRB voting member level will spend an estimated 30 minutes per study to make an exemption determination.

§§ ____.116 and ____.117 General Requirements for Informed Consent (OMB Control No. 0990–0260)

Section ____.116 is being amended, as described in § ____.116(a)(9), to add a new basic element of consent that would apply to any research collection of identifiable private information. One of the following statements about such research collection much be provided to subjects: (i) A statement that identifiers might be removed from the data and the data that is not identifiable could be used for future research studies or distributed to another investigator for future research studies without additional informed consent from the subject or the representative, if this might be a possibility; or, (ii) a statement that the subject's data collected as part of the research, from which identifiers are removed, will not be used or distributed for future research studies. We estimate that there are 246,382 new protocols annually using individually identifiable information. For each protocol, we estimate that investigators will spend an average of 15 minutes in 2016 updating consent forms to comply with the new requirements.

Section ____.116 is being amended, as described in § ____.116(c) to allow broad consent to cover the storage, maintenance, and secondary research use of biospecimens and identifiable private information. Broad consent would be permissible for the storage or maintenance for secondary research of such information and biospecimens that were originally collected for either research studies other than the proposed research or non-research purposes. The broad consent document would also meet the consent requirement for the use of such stored biospecimens and information for individual research studies.

We anticipate 6,428 FWA holding institutions (80 percent) will develop an institution-wide research repository of biospecimens and identifiable private information available for future research in the manner prescribed under the new proposed exemption at § ____.104(f)(1). We estimate that 80 percent of institutions with an FWA (6,428 institutions) will implement a tracking system. Those institutions will require 1.0 FTEs on average to develop and maintain a tracking system.

It is anticipated that many investigators will choose to seek such consent in order to save time and burden by avoiding the need to (1) seek and obtain consent to every specific future research use, (2) seek full IRB review for research that meets one of the exempt research categories, or (3) seek IRB review for a waiver of consent.

Section____.116 is being amended, as described in § ____.116(h), to require that a copy of the final version of the consent form for each clinical trial conducted or supported by a Federal department or agency component conducting the trial on a publicly available federal Web site that will be established as a repository for such consent forms. The informed consent form must be posted in such form and manner as the department or agency head may prescribe, which will include at a minimum posting, in addition to the informed consent form, the name of the clinical trial and information about whom to contact for additional details about the clinical trial. The consent form must be published on the federal Web site within 60 days after the trial is closed to recruitment.

We estimate that Common Rule departments and agencies supports 5,270 new clinical trials annually, of which 575 are regulated by provisions in the FD&C Act and Trade Secrets Act based on the information presented in Table 3 of the Regulatory Impact Analyses section of the preamble. For the purpose of this analysis, we assume that each clinical trial is associated with one consent form that must be submitted by an investigator. We estimate that investigators will spend an average of 15 minutes submitting each consent form. In addition, for the 575 clinical trials regulated by provisions in the FD&C Act and Trade Secrets Act, we estimate that investigators will spend an average of 30 minutes redacting information before submission.

BILLING CODE 4150–36–P

Table 30 – Estimated Annual Reporting Burden

Sec. Description	Description of burden	Num. of Respondents	Num. of responses per respondent	Total annual responses	Avg. Hrs per response	Total Hrs
101(a)(2)--Expansion of rule to cover clinical trials not otherwise regulated by the FDA	Initial review	1,399.00	1.00	1,399.00	24.00	33,576.00
104(d)(2)(i)--Posting requirement for research and demonstration projects	Posting minimal information about study to federal website	4,377.00	1.00	4,377.00	1.82	7,966.14
105—Protection of Biospecimens and Identifiable Private information	IOs and legal staff to develop policies and procedures to implement standards	803.00	1.00	803.00	80.00	64,240.00
105--Biospecimen and information safe guards	time for investigators to comply with new requirements	43,997.00	1.00	43,997.00	40.00	1,759,880.00

Sec. Description	Description of burden	Num. of Respondents	Num. of responses per respondent	Total annual responses	Avg. Hrs per response	Total Hrs
111(a)(8)--IRB review of plans to return research result	IRB reviewer time to review plans to return research results	108,062.00	1.00	108,062.00	0.25	27,015.50
114--New requirement for one IRB of record for multi-site studies	Time to create agreements for all institutions involved in a study will rely on one IRB of record	8,035.00	1.00	8,035.00	15.00	120,525.00
115(a)(8)--Documenting IRB rationale for requiring continuing IRB review for research that would otherwise not require it	Create documentation	40,773.00	1.00	40,773.00	1.00	40,773.00
115(a)(8)--Documenting IRB rationale for requiring continuing IRB review for research that would otherwise not require it	Update systems	3,499.00	1.00	3,499.00	10.00	34,990.00

Sec. Description	Description of burden	Num. of Respondents	Num. of responses per respondent	Total annual responses	Avg. Hrs per response	Total Hrs
115(a)(9)--Documenting IRB rationale for determining that research on the expedited review list is more than minimal risk	Initial review	1,118.00	1.00	1,118.00	1.00	1,118.00
115(a)(9)--Documenting IRB rationale for determining that research on the expedited review list is more than minimal risk	Continuing review	606.00	1.00	606.00	1.00	606.00
115(a)(10)--Written agreement btwn institutions and unaffiliated IRBs documenting responsibilities	Institutions with no IRB agreement modifications	5,164.00	1.00	5,164.00	15.00	77,460.00
115(a)(10)--Written agreement btwn institutions and unaffiliated IRBs documenting responsibilities	Institutions with IRB agreement modifications	2,871.00	0.20	574.20	15.00	8,613.00

Sec. Description	Description of burden	Num. of Respondents	Num. of responses per respondent	Total annual responses	Avg. Hrs per response	Total Hrs
115(a)(11)--Records related to exemption determinations	IRB offices processing documentation	40,773.00	1.00	40,773.00	11.00	448,503.00
116(a)(9) & 117(b)(2)--New required element of informed consent telling subjects how their non-identifiable data or specimens might be used	Updating IC forms	246,382.00	1.00	246,382.00	0.25	61,595.50
116(c) & 117(c)(3)--Obtaining and documenting broad secondary use consent	Obtain consent research setting	9,000,000.00	1.00	9,000,000.00	0.25	2,250,000.00
116(c) & 117(c)(3)--Obtaining and documenting broad secondary use consent	Obtain consent non-research setting	21,000,000.00	1.00	21,000,000.00	0.17	3,570,000.00
116(c) & 117(c)(3)--Obtaining and documenting broad secondary use consent	Modify tracking system	21,000,000.00	1.00	21,000,000.00	0.17	3,570,000.00
116(h)--Requirement to post consent forms for clinical trials	Posting consent forms for new clinical trials	5,270.00	1.00	5,270.00	0.25	1,317.50

Sec. Description	Description of burden	Num. of Respondents	Num. of responses per respondent	Total annual responses	Avg. Hrs per response	Total Hrs
116(h)--Requirement to post consent forms for clinical trials	Posting consent forms for clinical trials already regulated by FD&C and trade secrets act regulations	575.00	1.00	575.00	0.50	287.50
TOTAL						**12,155,926.14**

BILLING CODE 4150–36–C

The total estimated burden imposed by these information collection requirements is 12,155,926 burden hours.

It should be noted that the burden estimates for the Common Rule include those approved information requirements in: (1) OMB No. 0990–0260, Protection of Human Subjects: Compliance with Federal Policy/IRB Recordkeeping/Informed Consent/Consent Documentation, approved through May 31, 2018; (2) OMB No. 0990–0263, Assurance Identification/IRB Certification/Declarations of Exemption Form (Common Rule), approved through March 31, 2018; (3) OMB No. 0990–0278, Federalwide Assurance (FWA) for the Protection of Human Subjects, approved through August 31, 2017; and, (4) OMB No. 0990–0279, HHS, Registration of an Institutional Review Board ((IRB), approved through August 31, 2015. As such, they will be amended and submitted to OMB as revisions to currently approved collections once the rule is finalized and the collections are due for renewal.

To ensure that comments on these new information collection requirements are received, OMB recommends that written comments be faxed to the Office of Information and Regulatory Affairs, OMB, Attn: [OS Desk Officer, FAX: 202–395–6974, or emailed to *oira_submission@omb.gov*. All comments should be identified with the title ''Federal Policy for the Protection of Human Subjects.''

In compliance with the Paperwork Reduction Act of 1995 (44 U.S.C. 3507(d)), the information collection provisions of this proposed rule will be submitted to OMB for review. These requirements will not be effective until OMB approves them.

VI. Summary of Comments Received on the 2011 Common Rule ANPRM

A. Initial Step Toward Modernization of the Common Rule: The Advance Notice of Proposed Rulemaking (ANPRM)

In considering changes in the Common Rule, the ANPRM requested comment on possible changes to seven aspects of the current regulatory framework.

1. Ensuring Risk-Based Protections
2. Streamlining IRB Review of Cooperative Studies
3. Improving Informed Consent
4. Strengthening Data Protections To Minimize Information Risks
5. Data Collection To Enhance System Oversight
6. Extension of Federal Regulations
7. Clarifying and Harmonizing Regulatory Requirements and Agency Guidance

Public comments on the ANPRM initially were requested by September 26, 2011; however, in response to public requests for an extension, the comment period was extended until October 26, 2011. A total of 1,051 comments were received, with many commenters responding to all 74 questions posed. Investigators comprised the largest group of commenters. Comments were also received from: Trade and professional associations; medical and social/behavioral research organizations; disease and patient advocacy groups; IRB members and staff; individual, private companies and the organizations representing them; and patients and research subjects. A large number of comments were lengthy and detailed, reflecting thoughtful consideration of the issues discussed. Many responses reflected the input of large research and health care organizations, including public university systems, research universities, academic medical centers, and medical schools, as well as networked health care providers. The greatest number of comments focused on the section addressing risk-based protections.

In addition to reviewing the public responses to the ANPRM, in preparing the NPRM, the deliberations of the Presidential Commission for the Study of Bioethical Issues (the Commission) were taken into account. Consideration was also given to public comments received on the request for information issued by the Commission on March 2,

2011, that sought public comment on the current federal and international standards for protecting the health and well-being of participants in scientific studies supported by the federal government.[92]

These suggested revisions to the Common Rule may affect other regulatory protections, such as the other subparts of the HHS human subjects protection regulations in 45 CFR part 46 (Subparts B, C, and D, which deal with particular populations of vulnerable subjects, and Subpart E which addresses registration of IRBs), FDA regulations, and the HIPAA Privacy Rule (45 CFR parts 160 and 164, Subparts A and E). It is contemplated that other regulatory provisions implicated by the changes to the Common Rule may need to be harmonized, to the extent appropriate, with any final regulations modifying the Common Rule, through rule modification or guidance. Additionally, guidance and other information would also be revised and/or written to the extent necessary and appropriate.[93]

B. ANPRM Issues and Public Comments Related To Improving Protections

1. Expanding the Scope of the Common Rule

The ANPRM asked for public comments regarding two potential changes to the regulations at § ____.101. The first would subject unaffiliated IRBs (IRBs that are not operated by an FWA-holding institution) that review research covered by the Common Rule to the requirements of the Common Rule. The second would extend the scope of research covered by the regulations.

Holding Unaffiliated IRBs Directly Accountable for Compliance With Certain Regulatory Requirements: To address institutions' concerns about OHRP's practice of enforcing compliance with the Common Rule through the institutions that are engaged in human subjects research, the ANPRM asked for comments on making appropriate changes to the Common Rule enforcement procedures so external IRBs are held directly accountable for compliance with certain regulatory requirements.[94]

Based on public comments received to a 2009 ANPRM[95] on the issue of IRB accountability, the July 2011 Common Rule ANPRM considered adding a new provision that would give Common Rule departments and agencies the authority to enforce compliance directly against IRBs that are not affiliated with an institution that has an assurance registered with HHS. This provision would not extend the scope of research that is covered by the regulations; rather, it would expand the scope of those entities subject to compliance oversight.

Some public commenters responding to the 2011 ANPRM cautioned that extending compliance oversight to unaffiliated IRBs might serve as a disincentive for some IRBs to be the IRB of record for cooperative research. A majority of commenters expressed an opposing view; that is, holding external IRBs directly accountable for compliance with the regulations would increase the comfort level of institutions in accepting the regulatory review of an external IRB.

Extension of Common Rule to Domestic Sites Funded by Common Rule Agencies: The ANPRM asked the public to consider a regulatory option to partially fulfill the goal of extending Common Rule protections to all human subjects research in the United States. The discussed policy would require domestic institutions that receive some federal funding from a Common Rule agency for nonexempt research with human subjects to extend the Common Rule protections to all human subjects research studies conducted at their institution.

Although supporting the principle that all human subjects research regardless of funding source should be conducted ethically, public commenters generally expressed concern and caution about the ANPRM consideration for a variety of reasons. Behavioral and social science researchers thought that this approach would unnecessarily bring less-than-minimal-risk research funded by non-federal sources (*e.g.,* surveys or observational studies supported by the nonprofit sector) under burdensome regulatory requirements while not enhancing protections. Some commenters argued that the increased regulatory burden that would ensue was not warranted and would shift scarce oversight resources to review of research studies that are generally non-problematic and frequently supported by non-federal funds, such as some student or institutional research.

Others argued that such a change was an overreach of federal oversight and constituted an unfunded mandate. Commenters from large academic research institutions felt that this change inappropriately focused heavily on academic institutions, which generally extend protections to all human subjects research at their institution, even if they have not ''checked the box'' [96] on their FWA indicating that they do so. They argued that such a change would not reach those institutions already operating outside the federal research system and would limit flexibility in making risk-based determinations about the levels of review required.

Industry also expressed concern about having to comply with two sets of regulations, that is, FDA regulations at 21 CFR parts 50 and 56 as well as the Common Rule. The ANPRM did not clarify that the changes under consideration would not require compliance with the Common Rule of non-federally funded research subject to regulation by FDA. However, there might continue to be research that would be subject to both sets of regulations involving federal funding of research concerning an FDA-regulated product.

Those commenters who supported a formal extension of the regulations cited the need to have one set of standards for all research, regardless of funding source; however, many noted that absent legislation covering all human subjects research conducted in the United States, it would be difficult to cover all research through a regulatory approach alone—gaps would still remain.

2. Safeguards for Information

Definition of Private Information and Applying the HIPAA Standards of ''Identifiability'' to Research Governed by the Common Rule: The ANPRM suggested that the definition of ''identifiability'' in the Common Rule be modified to better harmonize it with other regulatory definitions of ''identifiability'' within HHS. The ANPRM considered adopting for purposes of the Common Rule the HIPAA Privacy Rule's standards of what constitutes individually identifiable information, a limited data set, and de-

[92] 76 FR 11482 (Mar. 2, 2011).

[93] Research not subject to the Common Rule may still be subject to FDA regulation or the HIPAA Privacy Rule.

[94] See, *e.g.,* the proposal on IRB accountability released by OHRP in 2009, at *http://www.hhs.gov/ohrp/newsroom/rfc/com030509.html.*

[95] 74 FR 9578 (Mar. 5, 2009).

[96] The FWA covers all nonexempt human subjects research at the submitting institution that is HHS-conducted or –supported, or funded by any other federal department or agency that has adopted the Common Rule and relies upon the FWA. It is not project specific. Domestic institutions may voluntarily extend their FWA (and thus a Common Rule department or agency's regulatory authority) to cover all human subjects research at the submitting institution regardless of the source of support for the particular research activity. See Office for Human Research Subject Protections. (2011, June 17). What research does the Federalwide Assurance (FWA) cover? Retrieved from Frequently Asked Questions: *http://www.hhs.gov/ohrp/policy/faq/assurance-process/what-research-does-fwa-cover.html.*

identified information, in order to address inconsistencies regarding these definitions and concepts between the HIPAA Privacy Rule and the Common Rule. In addition, the ANPRM indicated that a prohibition on the re-identification of de-identified information (as defined in the HIPAA Privacy Rule) was being considered.

Private information is not considered to be identifiable under the Common Rule if the identity of the subject is not or may not be ''readily ascertained'' by the investigator from the information or associated with the information. In contrast, under the HIPAA Privacy Rule, health information is de-identified and thus exempt from the Rule only if it neither identifies nor provides a reasonable basis to believe that the information can be used to identify an individual. The HIPAA Privacy Rule provides two ways to de-identify information: (1) A formal determination by a qualified expert that the risk is very small that an individual could be identified; or (2) the removal of all 18 specified identifiers of the individual and of the individual's relatives, household members, and employers, as long as the covered entity has no actual knowledge that the remaining information could be used to identify the individual (45 CFR 164.514(b)).

The HIPAA Privacy Rule addresses some informational risks by imposing restrictions on how individually identifiable health information collected by health plans, health care clearinghouses, and most health care providers (''covered entities'') may be used and disclosed, including for research. In addition, the HIPAA Security Rule (45 CFR parts 160 and Subparts A and C of part 164) requires that these entities implement certain administrative, physical, and technical safeguards to protect this information, when in electronic form, from unauthorized use or disclosure. However, the HIPAA Rules apply only to covered entities (and in certain respects to their business associates), and not all investigators are part of a covered entity. Moreover, the HIPAA Rules do not apply specifically to biospecimens in and of themselves.

A majority of the public commenters strongly opposed the ideas discussed in the ANPRM regarding the definition of ''identifiability''. Many indicated that the HIPAA Privacy Rule's more stringent standard of identifiability would expand what is considered identifiable for purposes of the Common Rule and thus greatly impede generally low-risk research without adding meaningful protections for human subjects. In particular, they asserted that the HIPAA standards were created to protect against disclosure of health information contained in medical records. As such, commenters argued, they are not appropriate for many types of research that would be covered by the Common Rule (*e.g.,* behavioral and social science research). Others said this would be an extreme change in response to an as yet unidentified or clear problem. Commenters said that the information most at risk for inappropriate disclosure is the type of private health information that is already protected under the HIPAA Rules. Commenters feared that such a change in policy, while ''harmonizing'' the Common Rule certain HIPAA standards, would create inordinate burdens in terms of new documentation requirements and result in a requirement to apply the HIPAA standards to all types of research, regardless of the level of risk.

Several commenters expressed concern about a prohibition against re-identifying de-identified private information (as defined by HIPAA), noting that sometimes it will be appropriate for investigators to re-identify such information, for example, to return research results that have clinical relevance to the subjects. Also, some commenters noted that some research is specifically designed to test strategies for re-identifying de-identified (as defined by HIPAA) information, so an absolute prohibition against re-identification would halt such research.

Protecting Information: The ANPRM suggested establishment of mandatory data security and information protection standards for all studies that involve the collection, generation, storage, or use of identifiable or potentially identifiable information that might exist electronically or in paper form or contained in a biospecimen. It put forward the idea that these standards might be modeled after certain standards of HIPAA Rules and asked a series of questions about how best to protect private information.

Some public comments reflected confusion about the focus of the suggested standards and whether they would apply to information or biospecimens that were not individually identifiable. Although most commenters confirmed the need to protect the privacy and confidentiality of information of human subjects in research, a majority expressed serious concerns about the merits of requiring all investigators to meet standards modeled on certain HIPAA standards, such as those in the HIPAA Security Rule. Most commenters expressed the opinion that certain HIPAA standards are not well suited to some research of various kinds carried out by investigators not subject to the HIPAA Rules. Some commenters claimed that the HIPAA privacy standards do not adequately protect individuals' information. Many commenters claimed that standards modeled after certain HIPAA standards would be unnecessarily burdensome for studies in the behavioral and social sciences where the data are often less sensitive than health information.

Some comments maintained that HIPAA like standards would not always be suitable for the variety of research methods and procedures for the collection and storage of information in research activities not subject to the HIPAA Rules. Some commented that certain HIPAA standards would not be suitable because of the location of the research activity, or because the kind of institution supporting the research was significantly different from a covered entity. Others thought the HIPAA standards create confusion and complications for investigators and institutions that would increase if standards modeled on certain HIPAA standards were applied across the board. At the same time, regardless of the specific standards to be employed under this approach, several commenters noted that the additional administrative burden that might be created by establishing a data security and information protection system could be offset by the decreased time and attention IRBs would have to invest in reviewing every study that required data or biospecimen protections. They also noted that many institutions already have required data and biospecimen protection systems in place.

Some commenters noted that expansion of some of the exemption categories could only be ethically acceptable if those research activities were subject to a requirement for data security and information protection, because information collected for some research studies would no longer be collected under a research plan approved by an IRB. With regard to an absolute prohibition against re-identifying de-identified data, many commenters expressed concern, and provided reasons why re-identification might be valid or even desirable, including the need to return clinically relevant research results to an individual. For example, if the research uncovers information that might have important clinical significance for an individual, re-identification could be used so that the individual could get care. In addition, they pointed out that

the current Common Rule requires investigators that re-identify nonidentified private information as part of a research study to comply with the current Common Rule regulatory requirements.

3. Improving Informed Consent, Including Requiring Informed Consent for Research Use of Biospecimens and the Use of Broad Consent for Secondary Research Use of Biospecimens and Information

The public was asked to comment on: The length and complexity of informed consent forms; additional information, if any, that should be required by the regulations to assure that consent forms appropriately inform subjects about alternatives to participation, as well as whether or not there should be modifications or deletions to the required elements; whether subject comprehension should be assessed, and if so, under what circumstances; whether changes to the Common Rule would necessitate conforming changes to the authorization requirements of the HIPAA privacy requirements; and whether additional requirements in the consent process are warranted, such as financial disclosures by investigators. The ANPRM also requested comment on the need for regulation of consent for the following: Research use of biospecimens collected for clinical purposes, consent for research use of pre-existing data, and consent to secondary research use of data and biospecimens.

Consent for Research Use of Biospecimens and Information Generally: The ANPRM also requested comment on the value of generally requiring written consent for research use of any biospecimens collected for *clinical* purposes after the effective date of the new rules (such as research with excess pathology biospecimens). Such consent could be obtained by use of a brief standard consent form agreeing to generally permit future research. This brief consent could be broad enough to cover all biospecimens to be collected related to a particular set of encounters with an institution (*e.g.,* hospitalization) or even to any biospecimens to be collected at any time by that institution. The general rule as discussed in the ANPRM would be that a person needs to give consent, in writing, for research use of their biospecimens, though that consent need not be study-specific, and could cover open-ended future research.

The ideas presented in the ANPRM would be a substantial change from the current Rules in several ways. First, the current Rules allow research without consent when a biospecimen is used for research under conditions where the researcher does not possess information that would allow them to identify the person whose biospecimen is being studied. Thus, biospecimens collected as part of a non-research protocol (*e.g.,* clinical care) could be made nonidentified and used in research as long as the researcher cannot identify the source of the biospecimen. The ANPRM consideration would no longer allow that to occur, generally requiring researchers to obtain consent for research use of clinical biospecimens, even if nonidentified. A waiver of consent under limited circumstances was contemplated in the ANPRM, but no specific waiver criteria were discussed.

A majority of the commenters opposed the ANPRM's suggested requirement to have consent for research use of all biospecimens, regardless of identifiability, on both administrative and ethical grounds. Administrative reasons for opposition to the suggested consent requirements included the prohibitive costs to collect, log, and track consent status of data and biospecimens, and the considerable administrative efforts that would be required to keep track of the consent status. Commenters opposed to the suggested consent requirements on ethical grounds cited increased privacy risks to subjects arising from the need to maintain links between the consent documents and the biospecimens or data in order to ensure that any restrictions on the research use of such resources were honored. They also expressed their belief that convincing evidence of harm caused by research use of nonidentified clinical biospecimens without consent is lacking, especially when considering the public health benefit of such use, and noting that they were not convinced that the principle of autonomy outweighs or trumps the principle of beneficence. Some patient advocacy organizations also expressed concerns about the consequences of requiring consent for the use of nonidentified biospecimens. Yet, most of the comments from individual members of the public strongly supported consent requirements for use of their biospecimens, regardless of identifiability, or data.

Many commenters expressed the opinion that the existing regulatory framework is adequate and that current practices should be maintained, stressing that the research use of nonidentified data or biospecimens does not involve risk to the research participant. One commenter noted that ''In our extensive professional experience working with biospecimens on a daily basis, the current system has worked well and has greatly enriched the opportunity for discoveries that were unknown at the time of collection and when research does not require subject identification or involve patient risk.'' In contrast, some commenters supported the idea of requiring consent for research use of all biospecimens, with one commenter noting simply that ''research use of data initially collected for non-research purposes should always require informed consent.'' Commenters particularly noted concerns about imposing consent requirements on the use of biospecimens already collected—that is, not grandfathering in such resources—especially if these biospecimens are nonidentified. Requiring that consent be obtained for the use of these materials could result in their being rendered useless for research, which would represent a cost of its own in terms of lost opportunity. This concern was based on the practical limitations involved in obtaining consent for biospecimens that were de-identified in the past, given that it may not be possible to re-contact the original source.

The objections raised by the commenters about the possible adverse consequences of requiring consent for the use of nonidentified biospecimens—including, in particular, the proposition that such a change might significantly compromise an important and relatively low-risk area of research—resulted in suggestions in the comments that this should be systematically assessed before suggesting any new rules. In fact, several commenters suggested that data be collected on the cost and feasibility of instituting such a requirement before revising the Common Rule.

Consent Rules for Research Use of Pre-existing Data: The ANPRM asked for comments on revising the consent rules for research use of data previously collected for purposes other than the suggested research study. First, if the data were originally collected for non-research purposes, then, as is currently the rule, written consent would only be required if the researcher obtains information that identifies the subjects. There would accordingly be no change in the current ability of researchers to conduct such research using de-identified data or a limited data set, as such terms are used in the HIPAA Rules, without obtaining consent.

Second, if the data were originally collected for research purposes, then consent would be required regardless of whether the investigator obtains identifiers. Note that this would be a

change with regard to the current interpretation of the Common Rule in the case where the researcher does not obtain any identifiers. That is, the allowable current practice of telling the subjects, during the initial research consent, that the information they are providing will be used for one purpose, and then after stripping identifiers, allowing it to be used for a new purpose to which the subjects never consented, would not be allowed.

Consent to Secondary Research Use of Data and Biospecimens Through Broad Consent: The ANPRM suggested that consent for the use of biospecimens or data could be obtained using a standard, short form, in which the subject could be asked to provide broad consent, that is, consent for a variety of potential future uses of their biospecimens or data. The requirement for consent could be waived in certain circumstances. These changes would apply only to biospecimens and data collected after the effective date of a new final rule.

Public comments revealed variable opinions on this issue. Several commenters indicated that there is no need for additional regulations, with one university stating that it ''strongly opposes more restrictive regulations about the use of these biospecimens and sees no need to change the current regulations, even or perhaps especially in the case of secondary data analysis.'' Other commenters opposed broad consent, stating that researchers and clinicians should obtain specific consent from individuals for each research project. This opposition was made on the ethical grounds that because individuals are not fully informed of specific research purposes for broad consent, they can never be truly informed about the use of their data. In contrast, other commenters expressed clear support for general consent for secondary research use of biospecimens and data collected during research to exempt the research from IRB review, noting that ''we support the suggestion in the ANPRM to encourage general consent for the secondary research use of biospecimens and data and where this is not obtained IRB review is required.'' Other commenters favored requiring IRB review over permitting the use of a broad consent to approve secondary research use of identifiable data or biospecimens. These commenters believed that IRB consideration of consent requirements for individual research studies was more protective of human subjects than the ANPRM suggestions to permit broad consent for future use.

With regard to the burden of obtaining consent for the research use of de-identified biospecimens, this requirement could be less burdensome than anticipated due to the ANPRM's suggested allowance of broad consent. While the ANPRM suggested requiring consent for the use of biospecimens, it suggested allowing a one-time, broad consent for future uses to be obtained with a template form which, if used without changes, would not require IRB review, and could be obtained at the same time as the initial research or clinical consent. Some commenters, particularly patients and patient advocacy groups, expressed concern about the burden of re-consenting patients for broad consent after biospecimens were collected.

Several commenters suggested that data be collected on the cost and feasibility of instituting such a requirement before revising the Common Rule.

In most instances, the consent requirements described above would have been met at the time that the biospecimens or data were initially collected, when, under the ANPRM the subject would have signed a standard, brief general consent form allowing for secondary research. This brief consent could be broad enough to cover all data and biospecimens to be collected related to a particular set of encounters with an institution (*e.g.,* hospitalization) or to any data or biospecimens to be collected at any time by the institution, even as part of a research protocol.

The ANPRM suggested that this standardized broad consent form would permit the subject to say no to all future research. In addition, the ANPRM acknowledged that there are likely to be a handful of special categories of research with biospecimens that, given the unique concerns they might raise for a significant segment of the public, could be dealt with by check-off boxes allowing subjects to separately say agree or disagree to that particular type of research.

Further, the ANPRM suggested that the current prohibition that participation in a research study (such as a clinical trial) could not be conditioned on agreeing to allow future open-ended research using a biospecimen would be maintained. With regard to the secondary research use of pre-existing data, on those occasions when oral consent was acceptable under the regulations for the initial data collection, the ANPRM envisioned that subjects would have typically provided their oral consent for future research at the time of the initial data collection; a written consent form would not have to be signed in that circumstance.

The ANPRM suggested that these changes would only be applied prospectively, not retrospectively. In other words, they would only apply to biospecimens and data that are collected after the effective date of the new rules. It also noted that there would be rules that would allow for waiver of consent under specified circumstances, though those conditions would not necessarily be the same as those for other types of research.

Improving Consent Forms and Modifying the Required Elements of Consent: Public comments were largely in favor of finding ways to improve consent forms. However, commenters cited several systemic concerns that could be obstacles to shortening and simplifying forms, such as regulatory, legal, and institutional requirements, and the complexity of some studies. Of those responding to questions about the causative factors, blame for making forms long and complex was shared by sponsors of clinical trials, IRBs, regulatory agencies, and institutional legal counsel. The types of information cited as contributing to the excessive lengths of forms included the requirement to describe all reasonably foreseeable research risks and the complexity of study procedures. There was no consensus on how to better explain alternatives to research participation and few comments were submitted on this topic.

Commenters offered a few suggestions for modifying or deleting the required elements of consent, such as removing boilerplate language that only protects institutions and research sponsors, as well as removing some of the required elements for minimal risk research. However, many felt that guidance, rather than regulatory change, would better improve the development of consent forms. Although many commenters noted the need for shorter and more comprehensible consent forms, most felt that the required elements of consent articulated in the Common Rule are sufficient. Commenters overwhelmingly supported the goals articulated in the ANPRM, but cautioned against an overly prescriptive or rigid approach to consent forms. However, several commenters requested guidance on what might be included in a consent form for future research use of identifiable information and identifiable biospecimens to ensure that such forms satisfied the consent requirements of the Common Rule.

A majority of commenters supported the development of regulations or guidance designed to encourage

assessment of the extent to which human subjects comprehend consent forms, at least for certain types of higher risk studies or certain types of subject populations. Others argued that the regulations at § ____.116 already contain language implying the need to ensure comprehension through the use of the terms ''legally effective informed consent'' and ''language understandable to the subject.''

Finally, many commenters supported making changes to HIPAA authorization requirements, as necessary to conform to provisions of the Common Rule. In addition, most commenters were supportive of requiring investigators to disclose in consent forms certain information about the financial relationships they have with study sponsors.

Criteria for Waiver of Consent: The ANPRM asked whether changes to the regulations would clarify the current four criteria for waiver of informed consent and facilitate their consistent application. Few comments were received on this topic although many commenters expressed support for clarifying the key terms through guidance or altering the criteria. In particular, most comments on this topic noted the confusion that IRBs face when trying to understand the meaning of the terms ''practicable'' and ''adversely affect the rights and welfare of subjects.'' Some commenters expressed the opinion that the waiver criterion concerning rights and welfare should be interpreted to include reference to rights conferred by other federal laws or regulations, state or local laws, or laws in other countries where research is to be conducted. Some comments reflected concerns about privacy or security.

The ANPRM also asked for comments on the information investigators should be required to provide to prospective subjects in circumstances where the regulations would permit oral consent. Additional questions focused on whether there are additional circumstances under which it should be permissible to waive the usual requirements for obtaining or documenting informed consent, and whether there are types of research in which oral consent without documentation should not be permitted. There were few responses to these questions and no common themes or consensus among those submitted. However, several commenters pointed to the need to consider community norms throughout the consent process, including its documentation.

4. Improving the Collection and Analysis of Adverse Event Reports

The ANPRM asked the public to consider a number of changes to improve the current system for the real-time prompt collection of data regarding adverse events. The changes that the ANPRM stated were under consideration were intended to simplify and consolidate the reporting of information that is already required to be reported by an investigator, and not to expand the information that has to be reported. In addition to these changes, the ANPRM indicated that the Federal Government was also considering creating a central web-based repository to house a great deal of the information collected through the portal.

Although a number of commenters applauded the goal of easing and harmonizing reporting requirements, most expressed concerns about collecting data on unanticipated problems and adverse events in a central database. Those who supported the concept of centralized reporting asked for more detail on what such a system would entail. More specifically, several commenters noted that IRBs sometimes struggle with what should be reported and with distinguishing between the Common Rule term ''unanticipated problems'' and the FDA term ''adverse events.'' Commenters noted that under the Common Rule at § ____.103(b)(5), each institution determines through its own policies the procedures for reporting unanticipated problems to department or agency heads. As a result, there is no standardized definition of ''unanticipated problems,'' so each institution may be reporting different events. Commenters also sought better guidance on those terms and encouraged agencies to clarify meanings and reporting requirements.

Commenters stated that a standardized, streamlined set of data elements, a single web-based reporting tool that facilitates delivery to agencies and oversight bodies, and harmonized Federal agency guidance would simplify the process. However, many expressed skepticism that harmonization across Federal agencies could occur.

With regard to a centralized database, many commenters expressed concerns regarding the value in terms of cost and time with compiling such data, gleaned from diverse studies and sources, in order to conduct an integrated analysis. They commented that it is unclear how the data would be useful beyond a specific study and unclear who would have access to the data and how it would be managed and interpreted to better inform the regulatory process. Commenters asked, if the data reporting is real-time, who is expected to develop such a system and review incoming data to coordinate the appropriate response? Many commenters questioned the validity of data collected in such a generic manner and the ability to draw generalizable conclusions based on data collected from varied sources and contexts. Several commenters said that before implementing such a central repository, a thorough cost-benefit analysis should be conducted regarding strengths and limitations of similar data repositories. Until the utility of such a centralized system could be demonstrated, especially when compared to the current decentralized system, many felt the burden of creating such a system would not be counterbalanced by the benefit of added protections. Along these lines, commenters also questioned the utility of counting how many human subjects are enrolled in trials, stating that this would not be a meaningful way to develop risk estimates.

Many commenters cited the adequacy of current reporting systems, despite the need for improvement. Centralized reporting of adverse events would represent a dramatic change from how events are collected and reported now. For example, sponsors of clinical trials are responsible for continuously monitoring their trials, adverse events must be reported to sponsors, and new reporting would not substitute for reports to sponsors. In addition, under FDA regulations, when applicable, safety information from non-U.S. clinical trials may need to be reported. Moreover, sponsors and funding agencies probably would not rely on extracting information from a federal database as the source of information to meet all of their safety oversight obligations and would likely still require investigators to complete adverse event case report forms as well as rely on the use of Data Safety Monitoring Boards. Commenters also raised concerns that the use of an electronic centralized reporting system could be a substantial burden on investigators, may potentially decrease investigators' willingness to participate in trials, and may encourage the conduct of studies outside the regulations. If reporting systems were now required to also gather and store unanticipated problems in addition to adverse events, commenters said the system would become unwieldy, run the risk of creating long lag times in analysis, and draw low risk events into a system that should be focused on the

highest risk studies. Several commenters recommended that more efforts be made to improve current reporting systems, particularly ClinicalTrials.gov.

Based on the public comments, the NPRM does not pursue a centralized reporting system and thus this issue is not addressed further. OHRP will continue to engage in discussions with FDA and Common Rule departments and agencies regarding clarifying reporting terms and requirements.

5. Identifiability of Biospecimens

The ANPRM suggested that, regardless of what information is removed, it is possible to extract DNA from a biospecimen itself and potentially link it to otherwise available data to identify individuals. In addition, irrespective of whether biospecimens are considered individually identifiable, the ANPRM sought comment on whether the regulations should be changed to respect individuals' interest in being able to decide whether their biospecimens would be available for research, even if the biospecimen was not associated with any identifiable information. Consequently, it asked for public comment on the value of categorizing all research involving the primary collection of biospecimens as well as storage and secondary analysis of existing biospecimens as research involving identifiable information.

The ANPRM asked whether some types of genomic data should be considered identifiable and, if so, which types (*e.g.,* genome-wide single nucleotide polymorphism [SNP] analyses or whole genome sequences). It also asked whether human biospecimens should be considered inherently identifiable. A majority of commenters opposed changing the Common Rule to consider all biospecimens identifiable as defined by the existing regulations at § ____.102(f)(2) (and thereby categorizing their use as research involving a human subject), and expressed concern that doing so would significantly slow advances in research and human health. Several commenters noted that, although it is theoretically plausible to identify a person based on his or her biospecimen, the likelihood remains remote enough to argue against the presumption that the sources of all biospecimens are identifiable and cited a study showing that the risk of re-identification from a system intrusion of databases was only 0.22%.[97] Other commenters cited the administrative burden that would be exacted should such an interpretation be implemented, without sufficient evidence that such an interpretation would be reasonable or enhance protections.

Commenters were mostly concerned with the cost and burden that would be imposed by the requirement to obtain consent. Commenters anticipated these costs to include obtaining consent from participants and the administrative efforts required to keep track of the consent status of biospecimens. Most commenters did not provide detailed cost estimates with their comments; data are specifically requested in response to this NPRM. In addition, estimates of the type and number of studies that could not be pursued using existing samples and data because of the absence of sufficient consent are requested. Comment is also sought on the value to the public and research participants of being asked their permission for research use of their data and specimens.

Several commenters also stated that if the Common Rule were modified such that all biospecimens were covered under the rule regardless of their identifiability, there still might be some activities involving biospecimens or types of biospecimens that should be considered exempt or ''excused.'' Suggestions included:

- Identifying markers for cancer prognosis or prediction of response to cancer therapy, or identifying cancer molecular targets (molecular research)
- Basic science research (including analysis of biological processes)
- Research of rare conditions and diseases
- Pediatric research
- Research with samples that lack potentially identifying information, such as serum or plasma not containing DNA
- Biospecimens lacking nucleic acids (such as certain red blood cells, expiratory gases)
- Blood culture bacteria
- Bacterial and viral specimens (this was listed in a comment as a public health issue)
- Protein analysis
- Statistical method development (to the extent that this development is related to biospecimens)
- New molecular methods to detect infectious agents
- Use of specimens to develop and validate new assays for infectious agents
- Archival paraffin blocks

One commenter also suggested that the Rule could propose a definition for biospecimen such that the term does not include sample types that lack DNA.

In addition, some commenters noted that the recommendation to require consent might privilege the Belmont Report's principle of autonomy over the principle of justice, because requiring consent could result in lower participation rates in research by minority groups and marginalized members of society. The literature on consent rates in studies involving biospecimens suggests that while minority consent rates in some cases may be lower than non-minorities, when asked to consent, minority consent rates are still higher than projected.[98] [99] [100] Furthermore, better communication and community engagement with members of specific minority groups is needed to understand and address concerns related to research, and these measures could substantially improve participation rates. An increase in trust and partnership is likely to increase participation rates; using their samples and data without permission will hinder true partnership.

C. ANPRM Issues and Public Comments Related To Reducing Regulatory Burden

1. Activities Excluded From the Policy

The ANPRM asked questions about the definition of research and whether various activities should be excluded from the Common Rule, either by changing the definition of research or by adding exemptions, or both. The ANPRM sought comment on whether and, if so, how, the Common Rule should be changed to clarify whether quality improvement activities, program evaluation studies, or public health activities are covered. It also asked whether there are specific types of studies for which the existing rules are inappropriate. If so, comments were sought on whether this problem should be addressed through modifications to the exemption categories, or by changing the definition of ''research'' used in the Common Rule to exclude

[97] Kwok P *et al.* Harder Than You Think: A Case Study of Re-Identification Risk of HIPAA-Compliant Records. NORC at The University of Chicago and Office of the National Coordinator for Health Information Technology. 2011. *http://www.amstat.org/meetings/jsm/2011/onlineprogram/AbstractDetails.cfm?abstractid=302255.*

[98] Pentz RD *et al.* Research on Stored Biological Samples: Views of African American and White American Cancer Patients. American Journal of Medical Genetics, Part A. 2006 Apr 1; 140(7):733–9.

[99] Chen DT *et al.* Research With Stored Biological Samples; What Do Research Participants Want? Archives of Internal Medicine. 2005 Mar 28; 165(6):652–5.

[100] Scott *et al.* Biospecimen Repositories: Are Blood Donors Willing to Participate? Transfusion. 2010 September; 50(9): 1943–1950.

some of these studies, or a combination of both.

If the definition of research were to be changed, public comment was sought on how excluded activities should be defined (*e.g.,* ''quality improvement'' or ''program evaluation''). With regard to quality improvement activities, the public was asked to comment on whether it might be useful to adopt the distinction made by the HIPAA Privacy Rule, which distinguishes between ''health care operations'' and ''research'' activities, defining ''health care operations'' to include, among other activities, ''conducting quality assessment and improvement activities, including outcomes evaluation and development of clinical guidelines, provided that the obtaining of generalizable knowledge is not the primary purpose of any studies resulting from such activities.''

A majority of public comments supported excluding the following from the regulatory requirements: quality improvement activities, public health activities, and program evaluation. Many of these commenters argued that the public benefits resulting from these activities justified their practice, particularly given the generally low risk involved. Some argued that for some legally mandated activities designed to accomplish a public good, it would be inappropriate for IRBs or individuals to be able to impede or thwart the execution of those mandated activities. A majority of comments also favored distinguishing between research and health care operations, as such terms are defined in the HIPAA Privacy Rule, and excluding the latter from the policy.

Some commenters noted that people involved in these various activities are protected in other ways, and alluded to the sorts of measures that provide a measure of protection. Others suggested that any exclusions should be limited to data collection and analysis activities, or to activities below a certain threshold of risk (*i.e.,* minimal risk). A minority of comments objected to these exclusions, arguing that these activities represent encroachments on their individual rights and privacy, and that oversight in accordance with the Common Rule requirements would be more protective.

The overwhelming majority of public comments responding to the question about excluding specific fields of study from the regulatory requirements of the Common Rule supported explicitly excluding certain activities from the definition of research versus modifying the exemption categories. The overwhelming majority of these comments focused on oral history. Some of the comments were virtually identical and appear to have been coordinated. Many of the comments reflected the view that the Common Rule was not designed or intended to include oral history activities, and that the ethical codes pertaining to oral history procedures are not consistent with the application of ethical principles reflected in the Common Rule.

A smaller number of similar comments were submitted with respect to various humanities disciplines and journalism. A significant minority of commenters opposed the exclusion of any fields of study, arguing that the activity itself rather than the academic discipline or training of the investigator should be the basis for the assessment of whether the activity should be excluded. Some of the commenters recommended that the definition of research be focused more explicitly by being limited to ''biomedical and behavioral research,'' in accordance with the statutory provision underlying the Common Rule. A significant number of commenters recommended that guidance should be issued to clarify how the definition of research should be applied, with cases and explanations.

2. Research Exempt From IRB Oversight

Exemption Determination: The ANPRM discussed a mechanism to (1) register exempt research, and (2) audit a small but appropriate portion of such research, which would still be subject to other regulatory protections such as the suggested data security and information protection standards and certain consent requirements. The term ''excused'' rather than ''exempt'' was recommended to describe these categories of research, because they are not entirely exempt from oversight.

The ANPRM discussed a tracking mechanism to enable institutions to assure that such research meets the criteria for inclusion in the suggested ''excused'' categories. The original recommendations would require investigators to register their study with an institutional office by completing a brief form, thus eliminating the current practice of not allowing investigators to begin conducting such studies until a reviewer had determined it met the criteria for excused research. This would make the institution aware of key information about the research (such as the purpose of the research and the name of the study's principal investigator), without also requiring that the activity undergo a review that, if not done in a timely manner, could slow the research without adding any significant protection to subjects. In addition the institution could choose to review some of the submissions at the time they are filed and, if deemed appropriate, require that the study be sent for expedited review or, in rare cases, convened IRB review. It would be made clear that the regulations would not require, and in fact, would discourage, having each of these registration forms undergo a comprehensive administrative or IRB review prior to commencing the study or even afterward.

The auditing requirement was intended to encourage institutions to use the regulatory flexibility suggested for the ''excused'' categories of research. The auditing requirement would have provided institutions with information needed to assess their compliance with the new ''excused'' categories without unnecessarily subjecting all such research to either prospective review, or even routine review sometime after the study is begun. Note that currently, OHRP recommends that there be some type of review by someone other than the investigator to confirm that a study qualifies as exempt, and many institutions do impose such a requirement even though such a requirement is extra-regulatory.[101]

The ANPRM also asked whether this research should be called ''excused'' or some other term, whether it was acceptable for investigators to independently determine whether their research was excused, whether review of all registrations should be required, and whether there should be a time limitation or waiting period before excused research could begin. The ANPRM also asked whether it was appropriate to require institutions holding an FWA to conduct retrospective audits of a percentage of the excused studies to make sure they qualify for inclusion in an excused category, and if so, how such audits should be conducted.

Commenters overwhelmingly expressed concerns about adopting the term ''excused'' to describe this area of research and suggested the term ''registered'' should such a system be adopted. Commenters recommended the term ''registered'' because such studies would not be exempt or excused from other requirements, such as compliance with data and security provisions as well as, in certain circumstances, informed consent requirements. In general, commenters were not necessarily opposed to the concept of registration but sought further information on what this process would entail.

[101] Office for Human Research Protections. (2011, January 20). Exempt Research Determination FAQs. Retrieved from Frequently Asked Questions About Human Research: *http://www.hhs.gov/ohrp/policy/faq/index.html.*

Public commenters also expressed concerns about allowing an investigator to independently make the determination that his or her research is exempt. Other commenters suggested that this practice would be acceptable for some investigators, whose research is well known to IRB members, and is clearly within an exempt category. The ANPRM noted concerns that some exempt research was unnecessarily delayed by requirements of some institutions to review the research to make an exemption decision.

Several institutions reported that they already as a matter of policy require investigators to submit exempt studies to the IRB, not necessarily for full board review, but to ensure that the exempt determination is valid. These decisions typically are made by the IRB administrator and never involve full review unless there is concern about the exemption status. Thus, they felt the registration requirement was unnecessary and would add new administrative burdens for research already considered low risk.

Other commenters, such as investigators conducting research currently considered exempt, were strongly opposed to a registration requirement because it would add a new burden to conducting less than minimal risk and exempt research. In addition, commenters raised concerns about the administrative burden and need for a retrospective audit system of registered research.

Exemption Categories: The ANPRM considered revising the regulations regarding studies currently considered exempt by expanding the current exemption category 2 (research involving educational tests, surveys, focus groups, interviews, and similar procedures, found in the current Rule at § ____.101(b)(2)) to include all studies involving educational tests, surveys, interviews, and similar procedures so long as the subjects are competent adults, without any further qualifications. It also considered adding a new category for certain types of behavioral and social science research that goes beyond using only survey methodology, but nonetheless involves only specified minimal risk procedures, so long as the subjects are competent adults (but subject to the data security and information protection standards). The term ''competent'' as used in the ANPRM referred to adults who would be able to provide ''legally effective informed consent,'' as currently required by § ____.116.[102]

The ANPRM also considered whether to include on the list of exempt studies certain types of social and behavioral research conducted with competent adults that would involve specified types of benign interventions commonly used in social and behavioral research, that are known to involve virtually no risk to subjects, and for which prior review does little to increase protections to subjects. These would be methodologies that are familiar to people in everyday life and in which verbal or similar responses would constitute the research data being collected. For example, an investigator might ask subjects to watch a video, read a paragraph, or solve puzzles, and then ask them some questions to elicit word associations or time performance of activities. The specific methodologies might be spelled out in regulations, or they might be promulgated via a periodic mechanism to announce and update lists similar to the list that is published for activities that may be reviewed by an IRB using the expedited review procedures.[103]

A majority of commenters supported the ANPRM discussion on expanding current exemption category 2 (current Rule at § ____.101(b)(2)) by eliminating the limitations related to the recording of identifiable information and the harm that could result if a subject's responses were disclosed. However, many commenters were opposed to the requirement that subjects be ''competent adults'' in order for the expanded exemption to apply, asking whether tests of competency would be required for such research to proceed.

Many commenters also supported adding another exemption category of research for certain types of social and behavioral activities, conducted with competent adults, that would involve specified types of benign interventions beyond educational tests, surveys, focus groups, interviews, and similar procedures that are commonly used in social and behavioral research, that are known to involve virtually no risk to subjects, and for which IRB review does little to increase protections for subjects.

The ANPRM asked questions about whether the current limitations specified in exempt category 4 (research involving the use of existing information or biospecimens, § ____.101(b)(4) in the current Rule) should be eliminated. Specifically, the ANPRM suggested that the category would be revised to eliminate the word ''existing.'' With this elimination, the exemption would be broadened to cover the use of information or biospecimens that were or will be collected for purposes other than the suggested research, rather than requiring that all of the information or biospecimens already exist at the time the study is suggested for exemption.

The ANPRM also discussed whether research involving only the use of data or biospecimens collected for other purposes, even if the investigator intends to retain identifiers, should come within a new exemption category; studies that include a plan to provide individual research results to subjects would not qualify for this proposed exemption. In addition, the ANPRM asked whether certain flexible consent requirements could be imposed on some of these studies that would permit the use of a broad consent for future use, with a requirement that a subject's specific consent would be required before their biospecimens could be used for special categories of research.

Many of the comments supported the discussion in the ANPRM of eliminating the requirement that the information or biospecimens be ''existing'' at the time the study was suggested for exemption. However, a majority strongly disagreed that biospecimens should be considered or treated as though they were inherently identifiable. A majority also opposed the suggestion that there be consent requirements for the research use of nonidentifiable biospecimens collected for purposes other than the current research study.

Some commenters also favored requiring IRB review and approval for the use of identifiable private information and identifiable biospecimens, rather than permitting the use of a broad consent for future use to satisfy the regulatory requirement for consent. These commenters indicated that IRB review of specific research studies, and the IRB's consideration of whether a study specific informed consent should be required or whether informed consent could be waived, was more protective of human subjects than the ANPRM recommendation of permitting use of a broad consent for future use.

The ANPRM asked several questions about the interpretation and applicability of current exemption category 5 (current Rule at

[102] Informed consent is legally effective if, in part, it is both obtained from the subject or the subject's legally authorized representative and documented in a manner that is consistent with the HHS protection of human subjects regulations and with applicable laws of the jurisdiction in which the research is conducted. See Office for Human Research Protections. (2011, January 20). What is the meaning of ''legally effective informed consent?''. Retrieved from Frequently Asked Questions: *http://www.hhs.gov/ohrp/policy/faq/informed-consent/what-is-legally-effective-informed-consent.html.*

[103] 63 FR 60364 (Nov 9, 1998). Also available at, *http://www.hhs.gov/ohrp/policy/expedited98.html.*

§ ____.101(b)(5)), including the scope of the current interpretation of the category 5 exemption. The ANPRM also asked if the current category 5 guidance entitled, ''OPRR Guidance on 45 CFR 46.101(b)(5)'' [104] should be revised, or if additional guidance on the interpretation of exemption category 5 is needed.

There were few responses to these questions. However, those that did comment noted that this category is often misunderstood by IRBs and, at best, would benefit from clearer guidance. Commenters said that examples would help investigators and IRBs understand when research activities included in demonstration projects constitute human subjects research subject to the Common Rule. Commenters noted that many activities in demonstration projects do not contribute to generalizable knowledge as they produce results that are relevant only to the program being assessed; as such, many of these activities do not meet the Common Rule's regulatory definition of ''research'' and thus fall outside of the rule. Other commenters said that some activities in this category are mandated or required by law or regulation and should not be considered to be under the purview of the Common Rule. It was noted that the critical issue in these studies should be protecting privacy and as long as measures are in place to do so, additional protections are not required.

3. Expedited Review

The ANPRM discussed and sought comment on three possible changes to the review of research through expedited review: (1) Revising the definition of minimal risk, which is one of the criteria for determining whether a study is eligible for expedited review; (2) changing the default position so that research on the expedited review list could generally be presumed to involve minimal risk; (3) revising the criteria for approval of research studies under expedited review; and (4) allowing appropriately trained individuals who are not IRB members to conduct expedited reviews.

Definition of Minimal Risk: The ANPRM asked for public comment on whether the current regulatory definition of minimal risk [105] was appropriate. The definition of minimal risk has relevance to determining whether a protocol is eligible for expedited review. Public comments expressed both a desire to retain the current definition (slightly less than half) and a desire for changing it (slightly more than half). There were few common themes in the suggested changes to the language other than seeking clarification on what baselines an IRB should consider in determining the meaning of ''daily life'' and ''routine physical or psychological examinations.'' Several commenters acknowledged the difficulty of arriving at a concise definition for all circumstances. Those opposed to changing the definition said that IRBs generally understand how to interpret the language and that difficult or challenging application of the definition will persist regardless of the definition for those areas of research where risks are difficult to assess. Commenters recognized that the risks encountered in daily life can vary greatly depending on many factors, for example, where people live, what kind of work they are involved in, what their social and economic environment is, and their baseline health status. Thus, IRBs need to consider all of these issues in making a determination about the level of risk.

Eligibility for Expedited Review: The ANPRM suggested updating the current list of research activities eligible for expedited review; this list was last updated in 1998. It also considered mandating that a federal panel periodically (such as every year or every two years) review and update the list, based on a systematic, empirical assessment of the levels of risk. This would provide greater clarity about what would be considered to constitute minimal risk, and create a process that allows for routinely reassessing and updating the list of research activities that would qualify as minimal risk. The ANPRM asked for public comments on categories of research that should be considered for addition to the current list.

Several commenters provided suggestions for additions to the list of research activities eligible for expedited review. Others encouraged OHRP to consider developing principles for expedited review, rather than creating a revised list of research activities. Commenters suggested a more timely and consistent review of the list because of the rapidly changing state of science and technology.

The ANPRM also discussed the potential adoption of a default presumption in the rule that a study that includes only activities on the expedited review list is a minimal risk study and should receive expedited review. A reviewer would have the option of determining that the study should be reviewed by a convened IRB when that conclusion is supported by the specific circumstances of the study. The ANPRM also asked for comments on whether IRBs should be required to report instances when they overrode the default presumption that research appearing on the posted list did not warrant review by a convened IRB.

Commenters overwhelmingly welcomed the clarification that categories of research found on the published list should be presumed to be minimal risk. However, commenters were largely opposed to requiring IRBs to report instances when they conducted a review by the convened membership (versus an expedited review) for studies appearing on the list. They were opposed because of the additional administrative burden and also because they felt such a requirement would undermine the purview of local review and open IRBs up to second-guessing by OHRP.

Criteria for Approval under Expedited Review: The ANPRM asked whether all of the § ____.111 criteria should still be required for approval of studies that qualify for expedited review, and if not, which ones should not be required. Currently, before an IRB may approve a research study, including research that is being reviewed under an expedited procedure, the IRB must find that the criteria at § ____.111 have been met.

With regard to revising the criteria used for expedited review, comments were mixed. Nearly half of those commenting expressed concerns about establishing two sets of ethical standards for IRB review—one for convened review and one for expedited review. They asserted ethical and administrative concerns about operating under two sets of conditions and principles—that is, expedited review should not be viewed as less stringent than review conducted by a convened IRB.

Those commenters in favor of retaining the current criteria wrote that a double standard could result in arbitrary IRB decision making. In addition, many wrote that the current criteria are well understood by IRB members and the tendency to review a protocol through a convened IRB when expedited review would be permissible is more a function of institutional

[104] See 48 FR 9266–9270 (Mar 4, 1983). (OPRR Guidance on 45 CFR 46.101(b)(5), Exemption for Research and Demonstration Projects on Public Benefit and Service Programs, *http://www.hhs.gov/ohrp/policy/exmpt-pb.html*).

[105] The current rule states that minimal risk means that the probability and magnitude of harm or discomfort anticipated in the research are not greater in and of themselves than those ordinarily encountered in daily life or during the performance of routine physical or psychological examinations or tests. (45 CFR 46.102(i)).

concerns about liability than the regulatory requirements. They cited the regulatory language at § ____.111, which frequently contains the phrase ''wgeb appropriate,'' so that the reviewer(s) can exercise discretion in whether all of the criteria need to be applied.

Those in favor of revising the elements most often cited the irrelevance of some of the criteria for minimal risk research, such as the need to ensure that risks to subjects are reasonable in relation to anticipated benefits (§ ____.111)(a)(2)). They stated that in the case of minimal risk research, the need to balance risks with benefits is not pertinent. Some commenters asked OHRP to develop guidance for the expedited reviewer in interpreting the most relevant criteria during expedited review.

Several commenters noted that if the revised regulations remove the requirement for continuing review of studies initially reviewed through expedited review it would alleviate administrative burden; thus more extreme measures such as revising the review criteria would be less compelling.

Who May Conduct Expedited Reviews: The ANPRM asked for public comment on the advantages and disadvantages of requiring that expedited review be conducted by an IRB member versus an appropriately trained individual, such as the manager of the IRB office, who need not be a member of the IRB.

With regard to allowing a non-IRB member to conduct expedited review, comments were divided nearly evenly between those who opposed such a change and those who supported it. Those who opposed it cited the need for continuity and consistency across IRBs, as well as expressing concerns about accountability and liability. Those in favor of such a revision cited the expertise of IRB staff members and their ability to review many expedited studies at the same level as a member of the IRB.

4. Streamlining IRB Review

Cooperative Research: The ANPRM sought public comment on the feasibility, advantages, and disadvantages of mandating that all domestic (U.S.) sites in a study involving more than one institution rely on a single IRB for that study. This would apply regardless of whether the study underwent convened review or expedited review. Further, it would only affect which IRB would be designated as the reviewing IRB for institutional compliance with the IRB review requirements of the Common Rule. It would not relieve any site of its other obligations under the regulations to protect human subjects. Nor would it prohibit institutions from choosing, for their own purposes, to conduct additional internal ethics reviews, though such reviews would no longer have any regulatory status in terms of compliance with the Common Rule.

To address institutions' concerns about OHRP's practice of enforcing compliance with the Common Rule through the institutions that are engaged in human subjects research, the ANRPM also suggested that appropriate accompanying changes could be made in enforcement procedures to hold external IRBs directly accountable for compliance with certain regulatory requirements.[106] This change was discussed only for U.S. sites in multi-institutional studies. The ANPRM suggested that, in most cases, independent local IRB reviews of international sites are appropriate because it might be difficult for an IRB in the U.S. to adequately evaluate local conditions in a foreign country that could play an important role in the ethical evaluation of the study.

This issue attracted a large number of comments, and revealed nearly evenly divided perspectives. Researchers and disease advocacy groups tended to favor the single IRB review requirement. IRB and institutional representatives tended to be opposed to the possible requirement, though many indicated single IRB review should be encouraged. Support was especially strong for single IRB review for cooperative clinical trials for which the evaluation of a study's social value, scientific validity, and risks and benefits, and the adequacy of the informed consent form and process generally do not require the unique perspective of a local IRB. Moreover, depending on the nature of the study, FDA may not permit differences in protocols across sites, which further bolstered commenters' views that the requirements be harmonized across the Common Rule and FDA requirements. Commenters reported incidences of IRBs continuously second-guessing each other, which delayed studies to the point that subject recruitment opportunities were foregone or lost. This problem seemed especially critical in studies of rare diseases and cancers, which nearly always involve multiple research sites.

Support for the use of a single IRB, however, was not restricted to clinical trials. Several commenters cited long delays and burdensome requirements resulting from multiple reviews of studies in the behavioral and social sciences. In addition to the view that these administrative requirements do not enhance protections, supporters of a single IRB review of cooperative studies cited the frequent need for maintaining consistency across sites, which can be degraded by multiple reviews.

Despite support for the ANPRM suggestion, several commenters expressed concern about making such a provision mandatory, stating that the current regulations at § ____.114 currently permit the use of joint review arrangements for cooperative research. They noted that although this option exists, institutions might be hesitant to use it because of liability concerns and the unwillingness of institutions or IRBs to rely on the judgment of other institutions or IRBs. However, several commenters expressed concern about signaling the acceptability of a single IRB for review while allowing institutions to continue to conduct their own ethics review, fearing that such a policy would not correct the current situation, which tends to favor multiple reviews. Thus, they commented that mandating a single IRB might be the only way to achieve the goals of streamlining review while ensuring protections.

Another issue raised was the need to set clearer expectations of the responsibilities of local IRBs that are not designated as the central IRB. A number of commenters supporting the requirement for a central IRB also requested that OHRP issue guidance on how to select the IRB, responsibilities of all parties, and clarifying compliance and enforcement policies. Several commenters also requested that OHRP develop a template for reliance agreements to replace inter-institutional agreements currently in use.

Those who expressed concern about the use of a single IRB said some studies, especially in the behavioral and social sciences, might involve significant contextual issues reflecting community norms, standards, and practices, or local culture and customs. Use of a distant IRB might not consider and best protect subjects based on community norms. Others noted that such concerns can be addressed by investigators or IRBs submitting ''points to consider'' regarding significant contextual or cultural considerations of relevance to their site.

A primary issue posed by those opposed to mandating use of a single IRB in cooperative studies focused on potential loss of accountability and increased liability for the institutions

[106] 74 FR 9578 (Mar. 5, 2009). Also available at *http://www.hhs.gov/ohrp/newsroom/rfc/com030509.html*.

where the research is conducted but where the reviewing IRB is not located.

Streamlining Documentation Requirements for Expedited Studies: Under the current Common Rule, investigators typically must submit the same documents including a detailed protocol, informed consent forms, and any other supporting documents, regardless of whether the study will be reviewed by a convened IRB or be approved by the expedited review process. The ANPRM suggested that although it is important to document why research qualifies for expedited review, it is unclear whether the time and effort expended in such preparation activities result in increased benefit in terms of protecting subjects.

The ANPRM further suggested that standard templates for protocols and consent forms and sample versions of those documents that are specifically designed for use in the most common types of studies might facilitate expedited review. Such forms would need to be carefully designed to eliminate those elements that are of relevance only in studies that pose greater than minimal risks and to substantially reduce the current burden of researchers involved in producing these documents and of the IRB members who review them. The ANPRM asked whether there were specific changes that could be made to reduce the burden imposed on investigators and their staffs in terms of meeting the requirements to submit documents to an IRB, without decreasing protections to subjects.

There were few comments on streamlining the document submission requirements for expedited review, and there was no consensus among those who did comment about how to achieve that goal.

Continuing Review: The ANPRM asked for public comments on eliminating continuing review for all minimal risk studies that undergo expedited review, unless the reviewer explicitly justifies why continuing review would enhance protection of research subjects.

Additionally, the ANPRM suggested that, for studies initially reviewed by a convened IRB, continuing review would not be required after the study reaches the stage where procedures are limited to either: (1) Analyzing data (even if it is identifiable), or (2) accessing follow-up clinical data from procedures that subjects would undergo as part of standard care for their medical condition or disease (such as periodic CT scans to monitor whether the subjects' cancers have recurred or progressed) unless specifically mandated by the IRB,. This would be a change from the current Rules, which require at least expedited IRB review of the activities described in (1) and (2) above. The requirement that research involving greater than minimal risk be reviewed by a convened IRB would not be changed from the current system.

By eliminating the requirement for continuing review of these activities, the ANPRM suggested that this change would allow for more effective use of IRBs' time by enabling the IRB to focus on reviewing information that is necessary to ensure protection of research subjects. Requiring annual continuing review of research studies involving only activities that are already well-documented to generally involve no more than minimal risk may provide little if any added protection to subjects, and it may be preferable for IRB resources to be devoted to research that poses greater than minimal risk.

The ANPRM asked for public comment on whether it would be appropriate to require IRBs to submit periodic reports to OHRP in the instances in which they choose to override the default policy of no continuing review required for the situations described above. The information, if collected by OHRP, might be useful in developing future guidance or revising the categories of research eligible for expedited review.

A large majority of public comments were in favor of the suggested revisions. Many were comfortable with continuing to allow IRBs or reviewers the discretion to require continuing review in certain circumstances, citing the historical position of OHRP in considering the regulations as the floor, rather than the ceiling, for protecting the subjects of research. Those who were opposed to the revisions cited concerns about institutional liability, the possibility for increased noncompliance among investigators no longer required to ''check in,'' and possible breakdowns in lines of communications between investigators and IRBs. Others expressed concerns about how an IRB will know that a study has ended and suggested that investigators be required to file a notice of closure of a study.

Note that the November 10, 2010, document entitled, ''Guidance on IRB Continuing Review of Research'' states:

> OHRP is aware that many IRBs require investigators to submit final closeout reports when a research study is completed or no longer involves human subjects. Since the HHS regulations at 45 CFR part 46 do not require submission of such reports, institutions are free to decide whether and when such reports are required and what their content should include.[107]

Commenters overwhelmingly opposed requiring IRBs to periodically report on the instances when they (or a reviewer) elect to override the default position of no continuing review required. The reasons for opposition included: (1) Additional administrative burden that would negate the reduced burden gained; (2) the possibility that requiring such reporting would discourage IRBs/reviewers from making an override decision; and (3) concerns that such reports would lead to OHRP second-guessing IRB decisions and imposing compliance oversight in an extra-regulatory decision. Several commenters suggested that OHRP could use other means than this requirement for developing guidance and improving educational efforts regarding expedited and continuing review.

5. Improving Harmonization

The ANPRM did not suggest any specific approaches to harmonization but asked for public comment on a set of questions focused on: (1) The extent to which differences in guidance on research protections from different agencies strengthen or weaken protections for human subjects; (2) the extent to which differences in guidance on research protections from different agencies facilitate or inhibit the conduct of research domestically and internationally; and (3) the desirability of all Common Rule agencies issuing one set of guidance.

Responses to questions about the need for harmonization across Common Rule agencies reflected widespread support for such efforts. Several commenters acknowledged the difficulty of getting all Common Rule agencies to agree on all issues, as each has a different mission and research portfolio. However, they encouraged seeking harmonized guidance whenever possible.

Regulatory Text

For the reasons set forth in the preamble, it is proposed that the Federal Policy for the Protection of Human Subjects be amended as follows:

PART ____ PROTECTION OF HUMAN SUBJECTS

____.101 To what does this policy apply?
____.102 Definitions for purposes of this policy.

[107] Office for Human Research Protections. (2010, November 10). Identifying the Point When Continuing Review is no Longer Necessary. Retrieved from Guidance on IRB Continuing Review of Research: *http://www.hhs.gov/ohrp/policy/continuingreview2010.html#section-k.*

____.103 Assuring compliance with this policy—research conducted or supported by any Federal department or agency.
____.104 Exempt research.
____.105 Protection of biospecimens and identifiable private information.
____.106 [Reserved]
____.107 IRB membership.
____.108 IRB functions and operations.
____.109 IRB review of research.
____.110 Expedited review procedures for certain kinds of research involving no more than minimal risk, and for minor changes in approved research.
____.111 Criteria for IRB approval of research.
____.112 Review by institution.
____.113 Suspension or termination of IRB approval of research.
____.114 Cooperative research.
____.115 IRB records.
____.116 General requirements for informed consent.
____.117 Documentation of informed consent.
____.118 Applications and proposals lacking definite plans for involvement of human subjects.
____.119 Research undertaken without the intention of involving human subjects.
____.120 Evaluation and disposition of applications and proposals for research to be conducted or supported by a Federal department or agency.
____.121 [Reserved]
____.122 Use of Federal funds.
____.123 Early termination of research support: Evaluation of applications and proposals.
____.124 Conditions.

§ ____.101 To what does this policy apply?

(a) Except as provided in paragraph (b) of this section, and as detailed in § ____.104, this policy applies to the research described in paragraphs (a)(1) and (2) of this section. The entities that must comply with this policy are institutions that are engaged in research described in paragraphs (a)(1) or (2) of this section, and institutional review boards (IRBs) reviewing research that is subject to this policy.

(1) All research involving human subjects conducted, supported, or otherwise subject to regulation by any Federal department or agency that takes appropriate administrative action to make the policy applicable to such research. This includes research conducted by Federal civilian employees or military personnel, except that each department or agency head may adopt such procedural modifications as may be appropriate from an administrative standpoint. It also includes research conducted, supported, or otherwise subject to regulation by the Federal Government outside the United States.

(2) All clinical trials as defined by this policy, irrespective of funding source, that meet all of the following conditions:

(i) The clinical trials are conducted by an institution that receives support from a Federal department or agency for human subjects research that is not excluded from this policy under § ____.101(b)(2) and does not qualify for exemption in accordance with § ____.104;

(ii) The clinical trials are not subject to regulation by the Food and Drug Administration; and

(iii) The clinical trials are conducted at an institution located within the United States.[1]

(b) The following categories of activities are excluded from this policy, and no procedural, recordkeeping, or other requirements of this policy apply to the activities other than the conditions specified for the relevant category or categories:

(1) The following activities are excluded because they are *deemed not to be research,* as defined in § ____.102(l), for the purposes of this regulation:

(i) Data collection and analysis, including the use of biospecimens, for an institution's own internal operational monitoring and program improvement purposes, if the data collection and analysis is limited to the use of data or biospecimens originally collected for any purpose other than the currently proposed activity, or is obtained through oral or written communications with individuals (*e.g.,* surveys or interviews).

(ii) Oral history, journalism, biography, and historical scholarship activities that focus directly on the specific individuals about whom the information is collected.

(iii) Collection and analysis of data, biospecimens, or records by or for a criminal justice agency for activities authorized by law or court order solely for criminal justice or criminal investigative purposes.

(iv) Quality assurance or improvement activities involving the implementation of an accepted practice to improve the delivery or quality of care or services (including, but not limited to, education, training, and changing procedures related to care or services) if the purposes are limited to altering the utilization of the accepted practice and collecting data or biospecimens to evaluate the effects on the utilization of the practice. This exclusion does not cover the evaluation of an accepted practice itself.

(v) Public health surveillance activities, including the collection and testing of biospecimens, conducted, supported, requested, ordered, required, or authorized by a public health authority and limited to those necessary to allow the public health authority to identify, monitor, assess, or investigate potential public health signals or the onset of a disease outbreak, including trends, or signals, and patterns in diseases, or a sudden increase in injuries from using a consumer product, or conditions of public health importance, from data, and including those associated with providing timely situational awareness and priority setting during the course of an event or crisis that threatens public health, including natural or man-made disasters.

(vi) Surveys, interviews, surveillance activities and related analyses, or the collection and use of biospecimens conducted by a defense, national security, or homeland security authority solely for authorized intelligence, homeland security, defense, or other national security purposes.

(2) The following activities are excluded because they are considered to be *low-risk* human subjects research, when already subject to independent controls without application of these regulatory requirements. These exclusions do not apply when the research includes the collection or analysis of biospecimens. All of the following exclusion categories apply to research subject to this policy and to research subject to the additional requirements of 45 CFR part 46, subparts B, C, and D, however, the exclusion at paragraph (b)(2)(i) of this section applies only to research subject to subpart D for research involving educational tests, or observations of public behavior when the investigator does not participate in the activities being observed.

(i) Research, not including interventions, that involves the use of educational tests (cognitive, diagnostic, aptitude, achievement), survey procedures, interview procedures, or observation of public behavior (including visual or auditory recording) uninfluenced by the investigators, if at least one of the following criteria is met:

(A) The information is recorded by the investigator in such a manner that human subjects cannot be identified, directly or through identifiers linked to the subjects;

(B) Any disclosure of the human subjects' responses outside the research would not reasonably place the subjects

[1] Under this provision, only 45 CFR part 46, subpart A, applies to all clinical trials meeting the applicable conditions. This provision does not require clinical trials to comply with the requirements of 45 CFR part 46, subparts B, C, and D.

at risk of criminal or civil liability or be damaging to the subjects' financial standing, employability, educational advancement, or reputation; or

(C) The research will involve a collection of information subject to the Paperwork Reduction Act of 1995, 44 U.S.C. 3501 *et seq.;* research information will be maintained on information technology that is subject to and in compliance with section 208(b) of the E-Government Act of 2002, 44 U.S.C. 3501 note; and all of the information collected, used, or generated as part of the research will be maintained in a system or systems of records subject to the Privacy Act of 1974, 5 U.S.C. 552a.

(ii) Research involving the collection or study of information that has been or will be acquired solely for non-research activities or were acquired for research studies other than the proposed research study, when either of the following two criteria is met:

(A) These sources are publicly available, or

(B) The information is recorded by the investigator in such a manner that human subjects cannot be identified, directly or through identifiers linked to the subjects, the investigator does not contact the subjects, and the investigator will not re-identify subjects or otherwise conduct an analysis that could lead to creating identifiable private information.

(iii) Research conducted by a Federal department or agency using government-generated or government-collected information obtained for non-research purposes (including criminal history data), if the information originally involved a collection of information subject to the Paperwork Reduction Act of 1995, 44 U.S.C. 3501 *et seq.*; the information is maintained on information technology that is subject to and in compliance with section 208(b) of the E-Government Act of 2002, 44 U.S.C. 3501 note; and all of the information collected, used, or generated as part of the research is maintained in a system or systems of records subject to the Privacy Act of 1974, 5 U.S.C. 552a.

(iv) Research as defined by this policy that involves only data collection and analysis involving the recipient's use of identifiable health information when such use is regulated under 45 CFR parts 160 and 164, subparts A and E, for the purposes of ''health care operations'' or ''research'' as those terms are defined at 45 CFR 164.501 or for the purpose of ''public health activities'' as described under 45 CFR 164.512(b).

(3) The following activities are excluded because they are considered to be *low-risk* human subjects research activities that *do not meaningfully diminish subject autonomy.* The following exclusion category applies to research subject to this policy and to research subject to the additional requirements of 45 CFR part 46, subparts B, C, or D.

(i) The secondary research use of a non-identified biospecimen that is designed only to generate information about an individual that already is known, including but not limited to the development and validation of certain tests and assays (such as research to develop a diagnostic test for a condition using specimens from individuals known to have the condition and those known not to have the condition), quality assurance and control activities, and proficiency testing.

(ii) [Reserved]

(c) Department or agency heads retain final judgment as to whether a particular activity is covered by this policy, which judgment shall be exercised consistent with the ethical principles of the Belmont Report.[2]

(d) Department or agency heads may require additional protections for specific research activities or classes of research activities conducted, supported, or otherwise subject to regulation by the Federal department or agency but not otherwise covered by this policy. Advance public notice will be required when those additional requirements apply to entities outside of the Federal department or agency itself.

(e) Compliance with this policy requires compliance with pertinent federal laws or regulations that provide additional protections for human subjects.

(f) This policy does not affect any state or local laws or regulations that may otherwise be applicable and that provide additional protections for human subjects.

(g) This policy does not affect any foreign laws or regulations that may otherwise be applicable and that provide additional protections to human subjects of research.

(h) When research covered by this policy takes place in foreign countries, procedures normally followed in the foreign countries to protect human subjects may differ from those set forth in this policy. In these circumstances, if a department or agency head determines that the procedures prescribed by the institution afford protections that are at least equivalent to those provided in this policy, the department or agency head may approve the substitution of the foreign procedures in lieu of the procedural requirements provided in this policy. Except when otherwise required by statute, Executive Order, or the department or agency head, notices of these actions as they occur will be published in the **Federal Register** or will be otherwise published as provided in department or agency procedures.

(i) Unless otherwise required by law, department or agency heads may waive the applicability of some or all of the provisions of this policy to specific research activities or classes of research activities otherwise covered by this policy provided the alternative procedures to be followed are consistent with the principles of the Belmont Report.[3] Except when otherwise required by statute or Executive Order, the department or agency head shall forward advance notices of these actions to the Office for Human Research Protections, Department of Health and Human Services (HHS), or any successor office, or to the equivalent office within the appropriate Federal department or agency, and shall also publish them in the **Federal Register** or in such other manner as provided in department or agency procedures. The waiver notice must include a statement that identifies the conditions under which the waiver will be applied and a justification as to why the waiver is appropriate for the research, including how the decision is consistent with the principles in Belmont Report. Each Federal department or agency conducting or supporting the research must establish, on a publicly accessible federal Web site, a list of the research for which a waiver has been issued.

(j) Federal guidance on the requirements of this policy shall be issued only after consultation, for the purpose of harmonization (to the extent appropriate), with other Federal departments and agencies that have adopted this policy, unless such consultation is not feasible.

(k) *Transition provisions*—(1) *Research initiated prior to the compliance dates.* Ongoing human subjects research in which human subjects (as defined by this policy) were involved prior to the compliance dates for the cited provisions need not comply with the additional requirements of this subpart at §§ ____.101(a)(2), ____.103(e), ____.104(c) through (f), ____.105, ____.108(a)(2), ____.109(f)(2), ____.111(a)(7) and (8), ____.114, ____.115(a)(10) and (11), ____.116, and ____.117 that became effective on [*effective date of the final rule*].

[2] The National Commission for the Protection of Human Subjects of Biomedical and Behavioral Research, *The Belmont Report: Ethical Principles and Guidelines for the Protection of Human Subjects of Research* (Apr. 18, 1979).

[3] *Id.*

(2) *Use of prior collections of biospecimens.* Research involving the use of prior collections of biospecimens that meets both of the following criteria need not comply with the requirements of these regulations:

(i) The biospecimens were collected for either research or non-research purposes before the compliance date for the additional requirements of this subpart at § ____.102(e)(1)(iii), and

(ii) Research use of the biospecimens occurs only after removal of any individually identifiable information associated with the biospecimens.

§ ____.102 Definitions for purposes of this policy.

(a) *Certification* means the official notification by the institution to the supporting Federal department or agency component, in accordance with the requirements of this policy, that a research project or activity involving human subjects has been reviewed and approved by an IRB in accordance with an approved assurance.

(b) *Clinical trial* means a research study in which one or more human subjects are prospectively assigned to one or more interventions (which may include placebo or other control) to evaluate the effects of the interventions on biomedical or behavioral health-related outcomes.

(c) *Department or agency head* means the head of any Federal department or agency, for example, the Secretary, HHS, and any other officer or employee of any Federal department or agency to whom the authority provided to the department or agency head by these regulations has been delegated.

(d) *Federal department or agency* refers to a Federal department or agency (the department or agency itself rather than its bureaus, offices or divisions) that takes appropriate administrative action to make this policy applicable to the research involving human subjects it conducts, supports, or otherwise regulates (*e.g.,* HHS, the Department of Defense, or the Central Intelligence Agency).

(e)(1) *Human subject* means a living individual about whom an investigator (whether professional or student) conducting research:

(i) Obtains data through intervention or interaction with the individual, and uses, studies, or analyzes the data;

(ii) Obtains, uses, studies, analyzes, or generates identifiable private information; or

(iii) Obtains, uses, studies, or analyzes biospecimens.

(2) *Intervention* includes both physical procedures by which data are gathered (*e.g.,* venipuncture) and manipulations of the subject or the subject's environment that are performed for research purposes.

(3) *Interaction* includes communication or interpersonal contact between investigator and subject.

(4) *Private information* includes information about behavior that occurs in a context in which an individual can reasonably expect that no observation or recording is taking place, and information that has been provided for specific purposes by an individual and that the individual can reasonably expect will not be shared or made public (*e.g.,* a medical record or clinically obtained biospecimen).

(5) *Identifiable private information* is private information that is individually identifiable (*i.e.,* the identity of the subject is or may readily be ascertained by the investigator or associated with the information).

(f) *Institution* means any public or private entity, or department or agency (including federal, state, and other agencies).

(g) *IRB* means an institutional review board established in accord with and for the purposes expressed in this policy.

(h) *IRB approval* means the determination of the IRB that the research has been reviewed and may be conducted at an institution within the constraints set forth by the IRB and by other institutional and federal requirements.

(i) *Legally authorized representative* means an individual or judicial or other body authorized under applicable law to consent on behalf of a prospective subject to the subject's participation in the procedure(s) involved in the research.

(j) *Minimal risk* means that the probability and magnitude of harm or discomfort anticipated in the research are not greater in and of themselves than those ordinarily encountered in daily life or during the performance of routine physical or psychological examinations or tests. The Secretary of HHS will maintain guidance that includes a list of activities considered to involve no more than minimal risk. This list will be re-evaluated no later than every 8 years based on recommendations from the Federal departments and agencies and the public.

(k) *Public health authority* (consistent with 45 CFR 164.501) means an agency or authority of the United States, a state, a territory, a political subdivision of a state or territory, an Indian tribe, or a foreign government, or a person or entity acting under a grant of authority from or contract with such public agency, including the employees or agents of such public agency or its contractors or persons or entities to whom it has granted authority, that is responsible for public health matters as part of its official mandate.

(l) *Research* means a systematic investigation, including research development, testing, and evaluation, designed to develop or contribute to generalizable knowledge. Activities that meet this definition constitute research for purposes of this policy, whether or not they are conducted or supported under a program that is considered research for other purposes. For example, some demonstration and service programs may include research activities.

§ ____.103 Assuring compliance with this policy—research conducted or supported by any Federal department or agency.

(a) Each institution engaged in research that is covered by this policy, with the exception of research excluded from this policy under § ____.101(b) or eligible for exemption under § ____.104(d), and that is conducted or supported by a Federal department or agency shall provide written assurance satisfactory to the department or agency head that it will comply with the requirements of this policy. In lieu of requiring submission of an assurance, individual department or agency heads shall accept the existence of a current assurance, appropriate for the research in question, on file with the Office for Human Research Protections, HHS, or any successor office, and approved for federalwide use by that office. When the existence of an HHS-approved assurance is accepted in lieu of requiring submission of an assurance, reports (except certification) required by this policy to be made to department and agency heads shall also be made to the Office for Human Research Protections, HHS, or any successor office. Federal departments and agencies will conduct or support research covered by this policy only if the institution has provided an assurance that it will comply with the requirements of this policy, as provided in this section, and only if the institution has certified to the department or agency head that the research has been reviewed and approved by an IRB.

(b) The assurance shall be executed by an individual authorized to act for the institution and to assume on behalf of the institution the obligations imposed by this policy and shall be filed in such form and manner as the department or agency head prescribes.

(c) The department or agency head may limit the period during which any assurance shall remain effective or

otherwise condition or restrict the assurance.

(d) Certification is required when the research is supported by a Federal department or agency and not otherwise excluded under § ____.101(b), waived under § ____.101(i), or exempted under § ____.104(d), (e), or (f)(2). Institutions shall certify that each proposal for research covered by this § ____.103 has been reviewed and approved by the IRB. Such certification must be submitted as prescribed by the Federal department or agency component supporting the research. Under no condition shall research covered by this § ____.103 be initiated prior to receipt of the certification that the research has been reviewed and approved by the IRB.

(e) For non-exempt research involving human subjects covered by this policy that takes place at an institution in which IRB oversight is conducted by an IRB that is not operated by the institution, the institution and the organization operating the IRB shall establish and follow procedures for documenting the institution's reliance on the IRB for oversight of the research and the responsibilities that each entity will undertake to ensure compliance with the requirements of this policy (*e.g.,* in a written agreement between the institution and the IRB, or by implementation of an institution-wide policy directive providing the allocation of responsibilities between the institution and an IRB that is not affiliated with the institution).

(Approved by the Office of Management and Budget under Control Number.)

§ ____.104 Exempt research.

(a) Unless otherwise required by department or agency heads, research activities in which the only involvement of human subjects will be in one or more of the categories in paragraphs (d) through (f) of this section are not subject to the requirements of this policy, other than those specified in the category.

(b) *Use of the exemption categories for research subject to the requirements of subparts B, C, and D.* Application of the exemption categories to research subject to the requirements of 45 CFR part 46, subparts B, C, and D, is as follows:

(1) *Subpart B.* Each of the exemptions at this § ____.104 may be applied to research conducted under subpart B if the conditions of the exemption are met.

(2) *Subpart C.* The exemptions at this § ____.104 do not apply to research conducted under subpart C, except for research aimed at a broader population that consists mostly of non-prisoners but that incidentally includes some number of prisoners.

(3) *Subpart D.* Only the exemptions at paragraphs (d)(1), (2), (4), (e)(2), and (f)(1) and (2) of this section may be applied to research conducted under subpart D if the conditions of the exemption are met.

(c) Federal departments and agencies shall develop a decision tool to assist in exemption determinations. Unless otherwise required by law, exemption determinations shall be made by an individual who is knowledgeable about the exemption categories and who has access to sufficient information to make an informed and reasonable determination, or by the investigator or another individual at the institution who enters accurate information about the proposed research into the decision tool, which will provide a determination as to whether the study is exempt. If the decision tool is used, further assessment or evaluation of the exemption determination is not required. An institution or, when appropriate, the IRB, must maintain records of exemption determinations made for research subject to the requirements of this policy for which the institution or IRB exercises oversight responsibility. These records must include, at a minimum, the name of the research study, the name of the investigator, and the exemption category applied to the research study. Maintenance of the completed decision tool shall be considered to fulfill this recordkeeping requirement.

(1) For studies exempted pursuant to paragraph (d)(2) of this section, the recordkeeping requirement will be deemed satisfied by the published list required at paragraph (d)(2)(i) of this section.

(2) [Reserved].

(d) The following categories of exempt human subjects research generally involve a low-risk intervention with human subjects, must be recorded as required in paragraph (c) of this section, and do not require application of standards for information and biospecimen protection provided in § ____.105 or informed consent. Only paragraph (d)(2) of this section allows for the collection and use of biospecimens:

(1) Research conducted in established or commonly accepted educational settings when it specifically involves normal educational practices. This includes most research on regular and special education instructional strategies, and research on the effectiveness of or the comparison among instructional techniques, curricula, or classroom management methods that are not likely to adversely impact students' opportunity to learn required educational content in that educational setting or the assessment of educators who provide instruction.

(2) Research and demonstration projects that are conducted or supported by a Federal department or agency, or otherwise subject to the approval of department or agency heads, and that are designed to study, evaluate, or otherwise examine public benefit or service programs, including procedures for obtaining benefits or services under those programs, possible changes in or alternatives to those programs or procedures, or possible changes in methods or levels of payment for benefits or services under those programs.

(i) Each Federal department or agency conducting or supporting the research and demonstration projects must establish, on a publicly accessible federal Web site or in such other manner as the department or agency head may prescribe, a list of the research and demonstration projects that the Federal department or agency conducts or supports under this provision. The research or demonstration project must be published on this list prior to or upon commencement of the research.

(ii) [Reserved]

(3)(i) Research involving benign interventions in conjunction with the collection of data from an adult subject through verbal or written responses (including data entry) or video recording if the subject prospectively agrees to the intervention and data collection and at least one of the following criteria is met:

(A) The information obtained is recorded in such a manner that human subjects cannot be identified directly or through identifiers linked to the subjects; or

(B) Any disclosure of the human subjects' responses outside the research would not reasonably place the subjects at risk of criminal or civil liability or be damaging to the subjects' financial standing, employability, educational advancement, or reputation.

(ii) For the purpose of this provision, benign interventions are brief in duration, harmless, painless, not physically invasive, not likely to have a significant adverse lasting impact on the subjects, and the investigator has no reason to think the subjects will find the interventions offensive or embarrassing. If these criteria are met, such benign interventions might include research activities in which a subject is asked to read materials, review pictures or videos, play online games, solve puzzles, or perform cognitive tasks.

(iii) If the research involves deceiving the subjects regarding the nature or purposes of the research, this exemption is not applicable unless the subject authorizes the deception as described in paragraph (d)(3)(iv) of this section.

(iv) For the purpose of this provision, authorized deception is prospective agreement by the subject to participate in research where the subject is informed that he or she will be unaware of or misled regarding the nature or purposes of the research.

(4) Taste and food quality evaluation and consumer acceptance studies

(i) If wholesome foods without additives are consumed, or

(ii) If a food is consumed that contains a food ingredient at or below the level and for a use found to be safe, or agricultural chemical or environmental contaminant at or below the level found to be safe, by the Food and Drug Administration or approved by the Environmental Protection Agency or the Food Safety and Inspection Service of the U.S. Department of Agriculture.

(e) The following categories of exempt human subjects research allow for the collection of sensitive information about human subjects, must not involve biospecimens, must be recorded as required in paragraph (c) of this section, and require application of standards for information and biospecimen protection provided in § ____.105:

(1) Research, not including interventions, involving the use of educational tests (cognitive, diagnostic, aptitude, achievement), survey procedures, interview procedures, or observation of public behavior (including visual or auditory recording), if the information obtained is recorded in such a manner that human subjects can be identified directly or through identifiers linked to the subjects.

(2) Secondary research use of identifiable private information that has been or will be acquired for non-research purposes, if the following criteria are met:

(i) Prior notice has been given to the individuals to whom the identifiable private information pertains that such information may be used in research; and

(ii) The identifiable private information is used only for purposes of the specific research for which the investigator or recipient entity requested access to the information.

(f) The following categories of exempt human subjects research involve biospecimens or identifiable private information, must be recorded as required in paragraph (c) of this section, require application of standards for information and biospecimen protection as described in § ____.105, and require informed consent and limited IRB review to the extent described in each category or otherwise required by law:

(1)(i) Storage or maintenance for secondary research use of biospecimens or identifiable private information that have been or will be acquired for research studies other than for the proposed research study, or for non-research purposes, if the following criteria are met:

(A) Written consent for the storage, maintenance, and secondary research use of the information or biospecimens is obtained in accordance with § ____.116(c) and (d)(2), and the template published by the Secretary of HHS in accordance with § ____.116(d)(1) must be used. Oral consent, if obtained during the original data collection and in accordance with § ____.116(c) and (d)(3), would be satisfactory for the research use of identifiable private information initially acquired in accordance with activities excluded from this policy under § ____.101(b)(2)(i) or exempt from this policy in accordance with § ____.104(d)(3) or (4), or § ____.104(e)(1);

(B) The reviewing IRB makes the determinations required by § ____.111(a)(9).

(ii) [Reserved.]

(2)(i) Research involving the use of biospecimens or identifiable private information that have been stored or maintained for secondary research use, if consent for the storage, maintenance, and secondary research use of the information and biospecimens was obtained as detailed in paragraph (f)(1)(i)(A) of this section.

(ii) If the investigator anticipates that individual research results will be provided to a research subject, the research may not be exempted under this provision and must be reviewed by the IRB and informed consent for the research must be obtained to the extent required by § ____.116(a) and (b).

§ ____.105 Protection of biospecimens and identifiable private information.

(a) *In General.* Institutions and investigators conducting research that is subject to this policy, or that is exempt from this policy under § ____.104(e) or (f), involving the collection, storage, or use of biospecimens or identifiable private information, shall implement and maintain reasonable and appropriate safeguards as specified in paragraph (b) of this section to protect biospecimens or identifiable private information that they collect, obtain, receive, maintain, or transmit for research. The safeguards shall reasonably protect against anticipated threats or hazards to the security or integrity of the information or biospecimens, as well as reasonably protect the information and biospecimens from any intentional or unintentional use, release, or disclosure that is in violation of paragraph (c) of this section. IRB review of the safeguards required by this section is not required, except to the extent required by § ____.104(f)(1).

(b) *Safeguards requirements.* The Secretary of HHS shall establish and publish for public comment a list of specific measures that the institution or investigator may implement that will be deemed to satisfy the requirement for reasonable and appropriate safeguards. The list will be evaluated as needed, but at least every 8 years, and amended, as appropriate, after consultation with other Federal departments and agencies. The institutions and investigators identified in paragraph (a) of this section shall implement paragraph (a) of this section by choosing either to apply the safeguards identified by the Secretary as necessary to protect the security or integrity of and limit disclosure of biospecimens and electronic and non-electronic identifiable private information, or to apply safeguards that meet the standards in 45 CFR 164.308, 164.310, 164.312, and 45 CFR 164.530(c). For Federal departments and agencies that conduct research activities that is or will be maintained on information technology that is subject to and in compliance with section 208(b) of the E-Government Act of 2002, 44 U.S.C. 3501 note, if all of the information collected, used, or generated as part of the activity will be maintained in systems of records subject to the Privacy Act of 1974, 5 U.S.C. 552a, and the research will involve a collection of information subject to the Paperwork Reduction Act of 1995, 44 U.S.C. 3501 *et seq.,* these research activities automatically will be considered in compliance with the Secretary's reasonable and appropriate safeguards standards, unless or until any additional safeguards are identified by the Secretary of HHS.

(c) *Limitations on use, release, and disclosure.* Unless otherwise required by law, institutions and investigators shall use or release biospecimens or use or disclose identifiable private information collected or maintained for research only:

(1) For human subjects research regulated by this policy;

(2) For public health purposes;

(3) For any lawful purpose with the consent of the subject; or

(4) For other research purposes if the institution or investigator has obtained adequate assurances from the recipient that

(i) The recipient will implement and maintain the level of safeguards required by paragraph (b) of this section;

(ii) Except for research that qualifies for exclusion under § ____.101(b) or exemption under § ____.104 the releasing or disclosing institution or investigator shall obtain documentation from the recipient that the research has been approved under § ____.111 to the extent required before releasing biospecimens or disclosing identifiable private information; and

(iii) The recipient shall not further release the biospecimens or disclose identifiable private information except for human subjects research regulated by this policy, or for other purposes permitted by this paragraph. For the purposes of this requirement, an institution or investigator shall obtain adequate assurances through the use of a written agreement with the recipient that the recipient will abide by these conditions.

(d) The provisions of this section do not amend or repeal, and shall not be construed to amend or repeal, the requirements of 45 CFR parts 160 and 164 for the institutions or investigators, including Federal departments or agencies, to which these regulations are applicable pursuant to 45 CFR 160.102.

§ ____.106 [Reserved]

§ ____.107 IRB membership.

(a) Each IRB shall have at least five members, with varying backgrounds to promote complete and adequate review of research activities commonly conducted by the institution. The IRB shall be sufficiently qualified through the experience and expertise of its members (professional competence), and the diversity of its members, including race, gender, and cultural backgrounds and sensitivity to such issues as community attitudes, to promote respect for its advice and counsel in safeguarding the rights and welfare of human subjects. The IRB shall be able to ascertain the acceptability of proposed research in terms of institutional commitments (including policies and resources) and regulations, applicable law, and standards of professional conduct and practice. The IRB shall therefore include persons knowledgeable in these areas. If an IRB regularly reviews research that involves a category of subjects that is vulnerable to coercion or undue influence, such as children, prisoners, pregnant women, physically or mentally disabled persons, or economically or educationally disadvantaged persons, consideration shall be given to the inclusion of one or more individuals who are knowledgeable about and experienced in working with these categories of subjects.

(b) Each IRB shall include at least one member whose primary concerns are in scientific areas and at least one member whose primary concerns are in nonscientific areas.

(c) Each IRB shall include at least one member who is not otherwise affiliated with the institution and who is not part of the immediate family of a person who is affiliated with the institution.

(d) No IRB may have a member participate in the IRB's initial or continuing review of any project in which the member has a conflicting interest, except to provide information requested by the IRB.

(e) An IRB may, in its discretion, invite individuals with competence in special areas to assist in the review of issues that require expertise beyond or in addition to that available on the IRB. These individuals may not vote with the IRB.

§ ____.108 IRB functions and operations.

(a) In order to fulfill the requirements of this policy each IRB shall:

(1) Have access to meeting space and sufficient staff to support the IRB's review and recordkeeping duties;

(2) Prepare and maintain a current list of the IRB members identified by name; earned degrees; representative capacity; indications of experience such as board certifications or licenses sufficient to describe each member's chief anticipated contributions to IRB deliberations; and any employment or other relationship between each member and the institution, for example, full-time employee, part-time employee, member of governing panel or board, stockholder, paid or unpaid consultant;

(3) Establish and follow written procedures for:

(i) Conducting its initial and continuing review of research and for reporting its findings and actions to the investigator and the institution;

(ii) Determining which projects require review more often than annually and which projects need verification from sources other than the investigators that no material changes have occurred since previous IRB review; and

(iii) Ensuring prompt reporting to the IRB of proposed changes in a research activity, and for ensuring that such changes in approved research, during the period for which IRB approval has already been given, may not be initiated without IRB review and approval except when necessary to eliminate apparent immediate hazards to the subject.

(4) Establish and follow written procedures for ensuring prompt reporting to the IRB; appropriate institutional officials; the department or agency head; and the Office for Human Research Protections, HHS, or any successor office, or the equivalent office within the appropriate Federal department or agency of

(i) Any unanticipated problems involving risks to subjects or others or any serious or continuing noncompliance with this policy or the requirements or determinations of the IRB; and

(ii) Any suspension or termination of IRB approval.

(b) Except when an expedited review procedure is used (as described in § ____.110), an IRB must review proposed research at convened meetings at which a majority of the members of the IRB are present, including at least one member whose primary concerns are in nonscientific areas. In order for the research to be approved, it shall receive the approval of a majority of those members present at the meeting.

§ ____.109 IRB review of research.

(a) An IRB shall review and have authority to approve, require modifications in (to secure approval), or disapprove all research activities covered by this policy that do not qualify for exemption pursuant to § ____.104(d), (e), or (f)(2).

(b) An IRB shall require that information given to subjects as part of informed consent is in accordance with § ____.116. The IRB may require that information, in addition to that specifically mentioned in § ____.116, be given to the subjects when in the IRB's judgment the information would meaningfully add to the protection of the rights and welfare of subjects.

(c) An IRB shall require documentation of informed consent or may waive documentation in accordance with § ____.117.

(d) An IRB shall notify investigators and the institution in writing of its decision to approve or disapprove the proposed research activity, or of modifications required to secure IRB approval of the research activity. If the IRB decides to disapprove a research activity, it shall include in its written notification a statement of the reasons for its decision and give the investigator an opportunity to respond in person or in writing.

(e) An IRB shall conduct continuing review of research requiring review by

the convened IRB at intervals appropriate to the degree of risk, not less than once per year, except as described in § ____.109(f).

(f)(1) Unless an IRB determines otherwise, continuing review of research is not required in the following circumstances:

(i) Research eligible for expedited review in accordance with § ____.110;

(ii) Research that has progressed to the point that it involves only one or both of the following, which are part of the IRB-approved study:

(A) Data analysis, including analysis of identifiable private information, or

(B) Accessing follow-up clinical data from procedures that subjects would undergo as part of standard care for their medical condition; or

(iii) Research reviewed by the IRB in accordance with the limited IRB review procedure described in § ____.111(a)(9).

(2) The IRB must receive confirmation on an annual basis that the research is still ongoing and that no changes have been made to the research that would require the IRB to conduct continuing review of the research.

(g) An IRB shall have authority to observe or have a third party observe the consent process and the research.

(Approved by the Office of Management and Budget under Control Number.)

§ ____.110 Expedited review procedures for certain kinds of research involving no more than minimal risk, and for minor changes in approved research.

(a) The Secretary of HHS, has established, and published as a Notice in the **Federal Register**, a list of categories of research that may be reviewed by the IRB through an expedited review procedure. The Secretary will evaluate the list at least every 8 years and amend it, as appropriate, after consultation with other federal departments and agencies and after publication in the **Federal Register** for public comment. A copy of the list is available from the Office for Human Research Protections, HHS, or any successor office.

(b)(1) An IRB may use the expedited review procedure to review the following:

(i) Some or all of the research appearing on the list, unless the reviewer determines that the study involves more than minimal risk;

(ii) Minor changes in previously approved research during the period for which approval is authorized; or

(iii) Research that is being reviewed to determine whether it qualifies for exemption in accordance with § ____.104(f)(1) in order to determine that the requirements of § ____.111(a)(9) are satisfied.

(2) Under an expedited review procedure, the review may be carried out by the IRB chairperson or by one or more experienced reviewers designated by the chairperson from among members of the IRB. In reviewing the research, the reviewers may exercise all of the authorities of the IRB except that the reviewers may not disapprove the research. A research activity may be disapproved only after review in accordance with the non-expedited procedure set forth in § ____.108(b).

(c) Each IRB that uses an expedited review procedure shall adopt a method for keeping all members advised of research proposals that have been approved under the procedure.

(d) The department or agency head may restrict, suspend, terminate, or choose not to authorize an institution's or IRB's use of the expedited review procedure.

§ ____.111 Criteria for IRB approval of research.

(a) In order to approve research covered by this policy the IRB shall determine that all of the following requirements are satisfied:

(1) Risks to subjects are minimized:

(i) By using procedures that are consistent with sound research design and that do not unnecessarily expose subjects to risk, and

(ii) Whenever appropriate, by using procedures already being performed on the subjects for diagnostic or treatment purposes.

(2) Risks to subjects are reasonable in relation to anticipated benefits, if any, to subjects, and the importance of the knowledge that may reasonably be expected to result. In evaluating risks and benefits, the IRB should consider only those risks and benefits that may result from the research (as distinguished from risks and benefits of therapies subjects would receive even if not participating in the research). The IRB should not consider possible long-range effects of applying knowledge gained in the research (*e.g.,* the possible effects of the research on public policy) as among those research risks that fall within the purview of its responsibility.

(3) Selection of subjects is equitable. In making this assessment the IRB should take into account the purposes of the research and the setting in which the research will be conducted and should be particularly cognizant of the special problems of research that involves a category of subjects who are vulnerable to coercion or undue influence, such as children, prisoners, pregnant women, physically or mentally disabled persons, or economically or educationally disadvantaged persons.

(4) Informed consent will be sought from each prospective subject or the subject's legally authorized representative, in accordance with, and to the extent required by, § ____.116.

(5) Informed consent will be appropriately documented, in accordance with, and to the extent required by, § ____.117.

(6) When appropriate, the research plan makes adequate provision for monitoring the data collected to ensure the safety of subjects.

(7) When appropriate, there are adequate provisions to protect the privacy of subjects and to maintain the confidentiality of data, in addition to the requirements in § ____.105, if the IRB determines that the standards for information and biospecimen protection in § ____.105 are not sufficient to protect the privacy of subjects and the confidentiality of data.

(8) If the investigator proposes a research plan for returning clinically relevant results to subjects, that the plan is appropriate.

(9) For purposes of conducting the limited IRB review as required by § ____.104(f)(1), the IRB need not make the determinations at paragraphs (a)(1) through (8) of this section, and shall determine that the following requirements are satisfied:

(i) The procedures for obtaining broad consent for storage, maintenance, and secondary research use of biospecimens or identifiable private information will be conducted in accordance with the requirements of the first paragraph in § ____.116.

(ii) If there will be a change for research purposes in the way the biospecimens or information are stored or maintained, that the privacy and information protection standards at § ____.105 are satisfied for the creation of any related storage database or repository.

(b) When some or all of the subjects are likely to be vulnerable to coercion or undue influence, such as children, prisoners, pregnant women, physically or mentally disabled persons, or economically or educationally disadvantaged persons, additional safeguards have been included in the study to protect the rights and welfare of these subjects.

§ ____.112 Review by institution.

Research covered by this policy that has been approved by an IRB may be subject to further appropriate review and approval or disapproval by officials of the institution. However, those

officials may not approve the research if it has not been approved by an IRB.

§ ____.113 Suspension or termination of IRB approval of research.

An IRB shall have authority to suspend or terminate approval of research that is not being conducted in accordance with the IRB's requirements or that has been associated with unexpected serious harm to subjects. Any suspension or termination of approval shall include a statement of the reasons for the IRB's action and shall be reported promptly to the investigator, appropriate institutional officials, and the department or agency head.

(Approved by the Office of Management and Budget under Control Number.)

§ ____.114 Cooperative research.

(a) Cooperative research projects are those projects covered by this policy that involve more than one institution. In the conduct of cooperative research projects, each institution is responsible for safeguarding the rights and welfare of human subjects and for complying with this policy.

(b)(1) Any institution located in the United States that is engaged in cooperative research must rely upon approval by a single IRB for that portion of the research that is conducted in the United States. The reviewing IRB will be selected by the Federal department or agency supporting or conducting the research or, if there is no funding agency, by the lead institution conducting the research.

(2) The following research is not subject to the requirements of this provision:

(i) Cooperative research for which more than single IRB review is required by law; or

(ii) Research for which the Federal department or agency supporting or conducting the research determines and documents that the use of a single IRB is not appropriate for the particular study.

(c) For research not subject to paragraph (b) of this section, an institution participating in a cooperative project may enter into a joint review arrangement, rely on the review of another IRB, or make similar arrangements for avoiding duplication of effort.

§ ____.115 IRB records.

(a) An institution, or when appropriate an IRB, shall prepare and maintain adequate documentation of IRB activities, including the following:

(1) Copies of all research proposals reviewed, scientific evaluations, if any, that accompany the proposals, approved sample consent forms, progress reports submitted by investigators, and reports of injuries to subjects.

(2) Minutes of IRB meetings, which shall be in sufficient detail to show attendance at the meetings; actions taken by the IRB; the vote on these actions including the number of members voting for, against, and abstaining; the basis for requiring changes in or disapproving research; and a written summary of the discussion of controverted issues and their resolution.

(3) Records of continuing review activities, including the rationale for conducting continuing review of research that has progressed to the point that it involves only one or both of the following:

(i) Data analysis, including analysis of identifiable private information, or

(ii) Accessing follow-up clinical data from procedures that subjects would undergo as part of standard care for their medical condition.

(4) Copies of all correspondence between the IRB and the investigators.

(5) A list of IRB members in the same detail as described in § ____.108(a)(2).

(6) Written procedures for the IRB in the same detail as described in § ____.108(a)(3) and (4).

(7) Statements of significant new findings provided to subjects, as required by § ____.116(b)(5).

(8) The rationale for requiring continuing review for research that otherwise would not require continuing review as described in § ____.109(f)(1).

(9) The rationale for an expedited reviewer's determination that research appearing on the expedited review list described in § ____.110(b)(1)(i) is more than minimal risk.

(10) The written agreement between an institution and an organization operating an IRB specifying the responsibilities that each entity will undertake to ensure compliance with the requirements of this policy, as described in § ____.103(e).

(11) Records relating to exemption determinations, as described in § ____.104(c).

(b) The records required by this policy shall be retained for at least 3 years, and records relating to research that is conducted shall be retained for at least 3 years after completion of the research. The institution or IRB may maintain the records in printed form, or electronically. All records shall be accessible for inspection and copying by authorized representatives of the Federal department or agency at reasonable times and in a reasonable manner.

(c) The institution or IRB retaining the records shall safeguard identifiable private information contained within these records in compliance with § ____.105.

(Approved by the Office of Management and Budget under Control Number.)

§ ____.116 General requirements for informed consent.

Except as provided elsewhere in this policy, no investigator may involve a human subject in research covered by this policy unless the investigator has obtained the legally effective informed consent of the subject or the subject's legally authorized representative. An investigator shall seek such consent only under circumstances that provide the prospective subject or the representative sufficient opportunity to consider whether or not to participate and that minimize the possibility of coercion or undue influence. The information that is given to the subject or the representative shall be in language understandable to the subject or the representative. The prospective subject or the representative must be provided with the information that a reasonable person would want to have in order to make an informed decision about whether to participate, and an opportunity to discuss that information. The information must be presented in sufficient detail relating to the specific research, and must be organized and presented in a way that does not merely provide lists of isolated facts, but rather facilitates the prospective subject's or representative's understanding of the reasons why one might or might not want to participate. In obtaining informed consent, the investigator must present first the information required by this section, before providing other information, if any, to the subject or the representative. Any informed consent form must include only the requirements of informed consent under this section, and appendices that include any other information provided to the subject or the representative. If an authorization required by 45 CFR parts 160 and 164 is combined with a consent form, the authorization elements required by 45 CFR 164.508 must be included in the consent form and not the appendices. No informed consent, whether oral or written, may include any exculpatory language through which the subject or the representative is made to waive or appear to waive any of the subject's legal rights, or releases or appears to release the investigator, the sponsor, the institution, or its agents from liability for negligence.

(a) *Basic elements of informed consent.* Except as provided in paragraph (c), (e), or (f) of this section, in seeking informed consent the following information shall be provided to each subject or the representative:

(1) A statement that the study involves research, an explanation of the purposes of the research and the expected duration of the subject's participation, a description of the procedures to be followed, and identification of any procedures that are experimental;

(2) A description of any reasonably foreseeable risks or discomforts to the subject;

(3) A description of any benefits to the subject or to others that may reasonably be expected from the research;

(4) A disclosure of appropriate alternative procedures or courses of treatment, if any, that might be advantageous to the subject;

(5) A statement describing the extent, if any, to which confidentiality of records identifying the subject will be maintained;

(6) For research involving more than minimal risk, an explanation as to whether any compensation and an explanation as to whether any medical treatments are available if injury occurs and, if so, what they consist of, or where further information may be obtained;

(7) An explanation of whom to contact for answers to pertinent questions about the research and research subjects' rights, and whom to contact in the event of a research-related injury to the subject;

(8) A statement that participation is voluntary, refusal to participate will involve no penalty or loss of benefits to which the subject is otherwise entitled, and the subject may discontinue participation at any time without penalty or loss of benefits to which the subject is otherwise entitled; and

(9) One of the following statements about any research that involves the collection of identifiable private information:

(i) A statement that identifiers might be removed from the data and the data that is not identifiable could be used for future research studies or distributed to another investigator for future research studies without additional informed consent from the subject or the representative, if this might be a possibility; or

(ii) A statement that the subject's data collected as part of the research, from which identifiers are removed, will not be used or distributed for future research studies.

(b) *Additional elements of informed consent.* Except as provided in paragraphs (c), (e), or (f) of this section, when appropriate, one or more of the following elements of information shall also be provided to each subject or the representative:

(1) A statement that the particular treatment or procedure may involve risks to the subject (or to the embryo or fetus, if the subject is or may become pregnant) that are currently unforeseeable;

(2) Anticipated circumstances under which the subject's participation may be terminated by the investigator without regard to the subject's or the representative's consent;

(3) Any additional costs to the subject that may result from participation in the research;

(4) The consequences of a subject's decision to withdraw from the research and procedures for orderly termination of participation by the subject;

(5) A statement that significant new findings developed during the course of the research that may relate to the subject's willingness to continue participation will be provided to the subject;

(6) The approximate number of subjects involved in the study;

(7) A statement that the subject's biospecimens may be used for commercial profit and whether the subject will or will not share in this commercial profit;

(8) A statement regarding whether clinically relevant research results, including individual research results, will be disclosed to subjects, and if so, under what conditions; and

(9) An option for the subject or the representative to consent, or refuse to consent, to investigators re-contacting the subject to seek additional information or biospecimens or to discuss participation in another research study.

(c)(1) *Elements of informed consent for broad consent to the storage, maintenance, and secondary research use of biospecimens or identifiable private information.* If the subject or the representative will be asked to provide broad consent to the storage or maintenance of biospecimens or identifiable private information, collected for either research studies other than the proposed research or non-research purposes, and the secondary research use of this stored material, the information required in paragraphs (a)(2), (3), (5), and (7) and, if applicable, (b)(7) through (9) of this section, shall be provided to each subject, with the following additional information:

(i) A general description of the types of research that may be conducted with information and biospecimens and the information that is expected to be generated from the research, the types of information or biospecimens that might be used in research, and the types of institutions that might conduct research with the biospecimens or information;

(ii) A description of the scope of the informed consent must be provided, including:

(A) A clear description of the types of biospecimens or information that were or will be collected and the period of time during which biospecimen or information collection will occur. This may include all biospecimens and information from the subject's medical record or other records existing at the institution at the time informed consent is sought; and

(B) For purposes of paragraph (c)(1)(ii)(A) of this section, the period of time during which biospecimen or information collection will occur cannot exceed 10 years from the date of consent. For research involving children as subjects, that time period cannot exceed 10 years after parental permission is obtained or until the child reaches the legal age for consent to the treatments or procedures involved in the research, whichever time period is shorter. The time limitations described do not apply to biospecimens or information that initially will be collected for research purposes.

(iii) A description of the period of time during which an investigator can continue to conduct research using the subject's biospecimens and information described in paragraph (c)(1)(ii)(A) of this section (*e.g.,* a certain number of years, or indefinitely);

(iv) A statement that participation is voluntary, refusal to participate will involve no penalty or loss of benefits to which the subject is otherwise entitled, and that the subject may withdraw consent, if feasible, for research use or distribution of the subject's information or biospecimens at any time without penalty or loss of benefits to which the subject is otherwise entitled, and information about whom to contact in order for the subject to withdraw consent. The statement must make clear that information or biospecimens that already have been distributed for research use may not be retrieved;

(v) If applicable, a statement notifying the subject or the representative that the subject or the representative will not be informed of the details of any specific research studies that might be conducted, including the purposes of the research, that will use the subject's information and biospecimens;

(vi) If applicable, a statement notifying the subject or the

representative of the expectation that the subject's information and biospecimens are likely to be used by multiple investigators and institutions and shared broadly for many types of research studies in the future, and this information and the biospecimens might be identifiable when shared;

(vii)The names of the institution or set of institutions at which the subject's biospecimens or information were or will be collected, to the extent possible (in recognition that institutions might change names or cease to exist); and

(viii) If relevant, an option for an adult subject or the representative to consent, or refuse to consent, to the inclusion of the subject's data, with removal of the identifiers listed in 45 CFR 164.514(b)(2)(i)(A) through (Q), in a database that is publicly and openly accessible to anyone. This option must be prominently noted, and must include a description of risks of public access to the data.

(2) [Reserved]

(d)(1) The Secretary of HHS will establish, and publish in the **Federal Register** for public comment, templates for consent that will contain all of the required elements of informed consent under paragraph (c) of this section. IRB review of the broad secondary use informed consent form obtained in accordance with paragraph (c) of this section is required unless the consent is obtained using only this template, without any changes.

(2) If § ____.104(f)(1) requires written consent, the consent for research use of biospecimens or identifiable private information must be documented by the use of a written consent form signed by the subject or the representative. The template for consent for research use established by the Secretary may serve as the written consent form. A copy shall be given to the person signing the form.

(3) If § ____.104(f)(1) allows for oral consent, a subject's or the representative's oral consent for research use of identifiable private information must be documented such that the consent is associated with the subject's identifiable private information. If this requirement is met through the use of written documentation, the subject or the representative is not required to sign the documentation.

(4) If the subject or the representative declines to consent to the research use of biospecimens or identifiable private information, this must be documented appropriately.

(e)(1) Waiver or alteration of consent in research involving public benefit and service programs conducted by or subject to the approval of state or local officials. An IRB may approve a consent procedure that does not include, or that alters, some or all of the elements of informed consent set forth above, or waive the above requirement to obtain informed consent, provided the IRB finds and documents that:

(i) The research or demonstration project is to be conducted by or subject to the approval of state or local government officials and is designed to study, evaluate, or otherwise examine:

(A) Public benefit or service programs;

(B) Procedures for obtaining benefits or services under those programs;

(C) Possible changes in or alternatives to those programs or procedures; or

(D) Possible changes in methods or levels of payment for benefits or services under those programs; and

(ii) The research could not practicably be carried out without the waiver or alteration.

(2) Additional criteria for waiver or alteration of consent for biospecimens. For research involving the use of biospecimens, an IRB may approve a consent procedure that does not include, or that alters, some or all of the elements of informed consent set forth above, or waive the above requirements to obtain informed consent, provided the IRB finds and documents the criteria in paragraph (e)(1) of this section, and the following additional criteria:

(i) There are compelling scientific reasons to conduct the research; and

(ii) The research could not be conducted with other biospecimens for which informed consent was obtained or could be obtained.

(3) If an individual was asked to consent to the storage or maintenance for secondary research use of biospecimens or identifiable private information in accordance with the requirements of this section at paragraph (c) of this section, and refused to consent, an IRB cannot waive consent for either the storage or maintenance for secondary research use, or for the secondary research use, of those biospecimens or information.

(f)(1) Waiver or alteration of consent. An IRB may approve a consent procedure that does not include, or that alters, some or all of the elements of informed consent set forth above, or waive the above requirements to obtain informed consent, provided the IRB finds and documents that:

(i) The research involves no more than minimal risk to the subjects;

(ii) The research could not practicably be carried out without the requested waiver or alteration;

(iii) If the research involves accessing or using identifiable biospecimens or identifiable information, the research could not practicably be carried out without accessing or using identifiers;

(iv) The waiver or alteration will not adversely affect the rights and welfare of the subjects; and

(v) Whenever appropriate, the subjects will be provided with additional pertinent information after participation.

(2) Additional criteria for waiver or alteration of consent for research involving biospecimens. For research involving the use of biospecimens, an IRB may approve a consent procedure that does not include, or that alters, some or all of the elements of informed consent set forth above, or waive the above requirements to obtain informed consent, provided the IRB finds and documents the criteria in paragraph (f)(1) of this section, and the following additional criteria:

(i) There are compelling scientific reasons for the research use of the biospecimens; and

(ii) The research could not be conducted with other biospecimens for which informed consent was obtained or could be obtained.

(3) If an individual was asked to consent to the storage or maintenance for secondary research use of biospecimens or identifiable private information, in accordance with the requirements of paragraph (c) of this section, and refused to consent, an IRB cannot waive consent for either the storage or maintenance for secondary research use, or for the secondary research use, of those biospecimens or information.

(g) An IRB may approve a research proposal in which investigators obtain, through oral or written communication or by accessing records, identifiable private information without individuals' informed consent for the purpose of screening, recruiting, or determining the eligibility of prospective human subjects of research, provided that the research proposal includes an assurance that the investigator will implement standards for protecting the information obtained, in accordance with and to the extent required by § ____.105.

(h)(1) A copy of the final version of the informed consent form for each clinical trial conducted or supported by a Federal department or agency must be posted by the awardee or the Federal department or agency component conducting the trial on a publicly available federal Web site that will be established as a repository for such informed consent forms . The informed consent form must be posted in such form and manner as the department or agency head may prescribe, which will

include at a minimum posting, in addition to the informed consent form, the name of the clinical trial and information about whom to contact for additional details about the clinical trial.

(2) The informed consent form must be posted on the federal Web site within 60 days after the trial is closed to recruitment.

(i) The informed consent requirements in this policy are not intended to preempt any applicable Federal, state, or local laws that require additional information to be disclosed in order for informed consent to be legally effective.

(j) Nothing in this policy is intended to limit the authority of a physician to provide emergency medical care, to the extent the physician is permitted to do so under applicable federal, state, or local law.

(Approved by the Office of Management and Budget under Control Number.)

§ ____.117 Documentation of informed consent.

(a) Except as provided in paragraph (c) of this section, and except for research for which consent is obtained in accordance with § ____.116(c), informed consent shall be documented by the use of a written informed consent form approved by the IRB and signed by the subject or the subject's legally authorized representative. A copy shall be given to the person signing the informed consent form.

(b) Except as provided in paragraph (c) of this section, the informed consent form may be either of the following:

(1) A written informed consent form that includes a form containing only the information required by § ____.116, and appendices that include any other information. The investigator shall give either the subject or the subject's legally authorized representative adequate opportunity to read the informed consent form before it is signed; alternatively, this form may be read to the subject or the subject's legally authorized representative.

(2) A short form written informed consent form stating that the elements of informed consent required by § ____.116 have been presented orally to the subject or the subject's legally authorized representative, and that the information required by § ____.116 was presented first to the subject, before other information, if any, was provided. The IRB shall approve a written summary of what is to be said to the subject or the representative. When this method is used, there shall be a witness to the oral presentation. Only the short form itself is to be signed by the subject or the representative. However, the witness shall sign both the short form and a copy of the summary, and the person actually obtaining consent shall sign a copy of the summary. A copy of the summary shall be given to the subject or the representative, in addition to a copy of the short form.

(c)(1) An IRB may waive the requirement for the investigator to obtain a signed informed consent form for some or all subjects if it finds any of the following:

(i) That the only record linking the subject and the research would be the informed consent form and the principal risk would be potential harm resulting from a breach of confidentiality. Each subject will be asked whether the subject wants documentation linking the subject with the research, and the subject's wishes will govern;

(ii) That the research presents no more than minimal risk of harm to subjects and involves no procedures for which written consent is normally required outside of the research context; or

(iii) If the subjects are members of a distinct cultural group or community in which signing forms is not the norm, that the research presents no more than minimal risk of harm to subjects and provided there is an appropriate alternative mechanism for documenting that informed consent was obtained. Documentation must include a description as to why signing forms is not the norm for the distinct cultural group or community.

(2) In cases in which the documentation requirement is waived, the IRB may require the investigator to provide subjects with a written statement regarding the research.

(3) This waiver does not apply to research for which consent is required to be documented in accordance with § ____.116(d)(2), (3), or (4).

(4) Documentation of informed consent may not be waived under paragraphs (c)(1)(i) or (iii) of this section for research subject to regulation by the Food and Drug Administration unless otherwise authorized by 21 CFR 56.109(c)(1).

(Approved by the Office of Management and Budget under Control Number.)

§ ____.118 Applications and proposals lacking definite plans for involvement of human subjects.

Certain types of applications for grants, cooperative agreements, or contracts are submitted to Federal departments or agencies with the knowledge that subjects may be involved within the period of support, but definite plans would not normally be set forth in the application or proposal. These include activities such as institutional type grants when selection of specific projects is the institution's responsibility; research training grants in which the activities involving subjects remain to be selected; and projects in which human subjects' involvement will depend upon completion of instruments, prior animal studies, or purification of compounds. Except for research excluded under § ____.101(b), waived under § ____.101(i), or exempted under § ____.104(d), (e), or (f)(2), no human subjects may be involved in any project supported by these awards until the project has been reviewed and approved by the IRB, as provided in this policy, and certification submitted, by the institution, to the Federal department or agency component supporting the research.

§ ____.119 Research undertaken without the intention of involving human subjects.

Except for research excluded under § ____.101(b), waived under § ____.101(i), or exempted under § ____.104(d), (e), or (f)(2), in the event research is undertaken without the intention of involving human subjects, but it is later proposed to involve human subjects in the research, the research shall first be reviewed and approved by an IRB, as provided in this policy, a certification submitted by the institution to the Federal department or agency component supporting the research, and final approval given to the proposed change by the Federal department or agency component.

§ ____.120 Evaluation and disposition of applications and proposals for research to be conducted or supported by a Federal department or agency.

(a) The department or agency head will evaluate all applications and proposals involving human subjects submitted to the Federal department or agency through such officers and employees of the Federal department or agency and such experts and consultants as the department or agency head determines to be appropriate. This evaluation will take into consideration the risks to the subjects, the adequacy of protection against these risks, the potential benefits of the research to the subjects and others, and the importance of the knowledge gained or to be gained.

(b) On the basis of this evaluation, the department or agency head may approve or disapprove the application or proposal, or enter into negotiations to develop an approvable one.

§ ____.121 [Reserved]

§ ____.122 Use of Federal funds.

Federal funds administered by a Federal department or agency may not be expended for research involving human subjects unless the requirements of this policy have been satisfied.

§ ____.123 Early termination of research support: Evaluation of applications and proposals.

(a) The department or agency head may require that Federal department or agency support for any project be terminated or suspended in the manner prescribed in applicable program requirements, when the department or agency head finds an institution has materially failed to comply with the terms of this policy.

(b) In making decisions about supporting or approving applications or proposals covered by this policy the department or agency head may take into account, in addition to all other eligibility requirements and program criteria, factors such as whether the applicant has been subject to a termination or suspension under paragraph (a) of this section and whether the applicant or the person or persons who would direct or has/have directed the scientific and technical aspects of an activity has/have, in the judgment of the department or agency head, materially failed to discharge responsibility for the protection of the rights and welfare of human subjects (whether or not the research was subject to federal regulation).

§ ____.124 Conditions.

With respect to any research project or any class of research projects the department or agency head of either the conducting or the supporting Federal department or agency may impose additional conditions prior to or at the time of approval when in the judgment of the department or agency head additional conditions are necessary for the protection of human subjects.

DEPARTMENT OF HOMELAND SECURITY

6 CFR Part 46

List of Subjects in 6 CFR Part 46

Human research subjects, Reporting and record-keeping requirements, Research.

For the reasons stated in the preamble, the Department of Homeland Security proposes to add 6 CFR part 46, as set forth at the end of the common preamble of this document.

PART 46—PROTECTION OF HUMAN SUBJECTS

Sec.
46.101 To what does this policy apply?
46.102 Definitions for purposes of this policy.
46.103 Assuring compliance with this policy—research conducted or supported by any Federal department or agency.
46.104 Exempt research.
46.105 Protection of biospecimens and identifiable private information.
46.106 [Reserved]
46.107 IRB membership.
46.108 IRB functions and operations.
46.109 IRB review of research.
46.110 Expedited review procedures for certain kinds of research involving no more than minimal risk, and for minor changes in approved research.
46.111 Criteria for IRB approval of research.
46.112 Review by institution.
46.113 Suspension or termination of IRB approval of research.
46.114 Cooperative research.
46.115 IRB records.
46.116 General requirements for informed consent.
46.117 Documentation of informed consent.
46.118 Applications and proposals lacking definite plans for involvement of human subjects.
46.119 Research undertaken without the intention of involving human subjects.
46.120 Evaluation and disposition of applications and proposals for research to be conducted or supported by a Federal department or agency.
46.121 [Reserved]
46.122 Use of Federal funds.
46.123 Early termination of research support: Evaluation of applications and proposals.
46.124 Conditions.

Authority: 5 U.S.C. 301; Pub. L. 107–296, sec. 102, 306(c); Pub. L. 108–458, sec. 8306.

Reginald Brothers,

Under Secretary for Science and Technology, DHS.

DEPARTMENT OF AGRICULTURE

7 CFR Part 1c

List of Subjects in 7 CFR Part 1c

Human research subjects, Reporting and record-keeping requirements, Research.

For the reasons stated in the preamble, the Department of Agriculture proposes to revise 7 CFR part 1c, as set forth at the end of the common preamble of this document.

PART 1c—PROTECTION OF HUMAN SUBJECTS

Sec.
1c.101 To what does this policy apply?
1c.102 Definitions for purposes of this policy.
1c.103 Assuring compliance with this policy—research conducted or supported by any Federal department or agency.
1c.104 Exempt research.
1c.105 Protection of biospecimens and identifiable private information.
1c.106 [Reserved]
1c.107 IRB membership.
1c.108 IRB functions and operations.
1c.109 IRB review of research.
1c.110 Expedited review procedures for certain kinds of research involving no more than minimal risk, and for minor changes in approved research.
1c.111 Criteria for IRB approval of research.
1c.112 Review by institution.
1c.113 Suspension or termination of IRB approval of research.
1c.114 Cooperative research.
1c.115 IRB records.
1c.116 General requirements for informed consent.
1c.117 Documentation of informed consent.
1c.118 Applications and proposals lacking definite plans for involvement of human subjects.
1c.119 Research undertaken without the intention of involving human subjects.
1c.120 Evaluation and disposition of applications and proposals for research to be conducted or supported by a Federal department or agency.
1c.121 [Reserved]
1c.122 Use of Federal funds.
1c.123 Early termination of research support: Evaluation of applications and proposals.
1c.124 Conditions.

Authority: 5 U.S.C. 301.

Catherine Woteki

Under Secretary for Research, Education, and Economics, USDA.

DEPARTMENT OF ENERGY

10 CFR Part 745

List of Subjects in 10 CFR Part 745

Human research subjects, Reporting and record-keeping requirements, Research.

For the reasons stated in the preamble, the Department of Energy proposes to revise 10 CFR part 745, as set forth at the end of the common preamble of this document.

PART 745—PROTECTION OF HUMAN SUBJECTS

Sec.
745.101 To what does this policy apply?
745.102 Definitions for purposes of this policy.
745.103 Assuring compliance with this policy—research conducted or supported by any Federal department or agency.
745.104 Exempt research.
745.105 Protection of biospecimens and identifiable private information.
745.106 [Reserved]
745.107 IRB membership.
745.108 IRB functions and operations.
745.109 IRB review of research.
745.110 Expedited review procedures for certain kinds of research involving no more than minimal risk, and for minor changes in approved research.

745.111 Criteria for IRB approval of research.
745.112 Review by institution.
745.113 Suspension or termination of IRB approval of research.
745114 Cooperative research.
745.115 IRB records.
745.116 General requirements for informed consent.
745.117 Documentation of informed consent.
745.118 Applications and proposals lacking definite plans for involvement of human subjects.
745.119 Research undertaken without the intention of involving human subjects.
745.120 Evaluation and disposition of applications and proposals for research to be conducted or supported by a Federal department or agency.
745.121 [Reserved]
745.122 Use of Federal funds.
745.123 Early termination of research support: Evaluation of applications and proposals.
745.124 Conditions.

Authority: 5 U.S.C. 301; 42 U.S.C. 7254.

Elizabeth Sherwood-Randall,
Deputy Secretary of Energy.

NATIONAL AERONAUTICS AND SPACE ADMINISTRATION

14 CFR Part 1230

List of Subjects in 14 CFR Part 1230

Human research subjects, Reporting and record-keeping requirements, Research.

For the reasons stated in the preamble, the National Aeronautics and Space Administration proposes to revise 14 CFR part 1230, as set forth at the end of the common preamble of this document.

PART 1230—PROTECTION OF HUMAN SUBJECTS

Sec.
1230.101 To what does this policy apply?
1230.102 Definitions for purposes of this policy.
1230.103 Assuring compliance with this policy—research conducted or supported by any Federal department or agency.
1230.104 Exempt research.
1230.105 Protection of biospecimens and identifiable private information.
1230.106 [Reserved]
1230.107 IRB membership.
1230.108 IRB functions and operations.
1230.109 IRB review of research.
1230.110 Expedited review procedures for certain kinds of research involving no more than minimal risk, and for minor changes in approved research.
1230.111 Criteria for IRB approval of research.
1230.112 Review by institution.
1230.113 Suspension or termination of IRB approval of research.
1230.114 Cooperative research.
1230.115 IRB records.
1230.116 General requirements for informed consent.
1230.117 Documentation of informed consent.
1230.118 Applications and proposals lacking definite plans for involvement of human subjects.
1230.119 Research undertaken without the intention of involving human subjects.
1230.120 Evaluation and disposition of applications and proposals for research to be conducted or supported by a Federal department or agency.
1230.121 [Reserved]
1230.122 Use of Federal funds.
1230.123 Early termination of research support: Evaluation of applications and proposals.
1230.124 Conditions.

Authority: 5 U.S.C. 301.

Richard S. Williams,
Chief Health and Medical Officer.

DEPARTMENT OF COMMERCE

15 CFR Part 27

List of Subjects in 15 CFR Part 27

Human research subjects, Reporting and record-keeping requirements, Research.

For the reasons stated in the preamble, the Department of Commerce proposes to revise 15 CFR part 27, as set forth at the end of the common preamble of this document.

PART 27—PROTECTION OF HUMAN SUBJECTS

Sec.
27.101 To what does this policy apply?
27.102 Definitions for purposes of this policy.
27.103 Assuring compliance with this policy—research conducted or supported by any Federal department or agency.
27.104 Exempt research.
27.105 Protection of biospecimens and identifiable private information.
27.106 [Reserved]
27.107 IRB membership.
27.108 IRB functions and operations.
27.109 IRB review of research.
27.110 Expedited review procedures for certain kinds of research involving no more than minimal risk, and for minor changes in approved research.
27.111 Criteria for IRB approval of research.
27.112 Review by institution.
27.113 Suspension or termination of IRB approval of research.
27.114 Cooperative research.
27.115 IRB records.
27.116 General requirements for informed consent.
27.117 Documentation of informed consent.
27.118 Applications and proposals lacking definite plans for involvement of human subjects.
27.119 Research undertaken without the intention of involving human subjects.
27.120 Evaluation and disposition of applications and proposals for research to be conducted or supported by a Federal department or agency.
27.121 [Reserved]
27.122 Use of Federal funds.
27.123 Early termination of research support: Evaluation of applications and proposals.
27.124 Conditions.

Authority: 5 U.S.C. 301.

James Hock,
Chief of Staff, Department of Commerce.

SOCIAL SECURITY ADMINISTRATION

20 CFR Part 431

List of Subjects in 20 CFR Part 431

Human research subjects, Reporting and record-keeping requirements, Research.

For the reasons stated in the preamble, the Social Security Administration proposes to add 20 CFR part 431, as set forth at the end of the common preamble of this document.

PART 431—PROTECTION OF HUMAN SUBJECTS

Sec.
431.101 To what does this policy apply?
431.102 Definitions for purposes of this policy.
431.103 Assuring compliance with this policy—research conducted or supported by any Federal department or agency.
431.104 Exempt research.
431.105 Protection of biospecimens and identifiable private information.
431.106 [Reserved]
431.107 IRB membership.
431.108 IRB functions and operations.
431.109 IRB review of research.
431.110 Expedited review procedures for certain kinds of research involving no more than minimal risk, and for minor changes in approved research.
431.111 Criteria for IRB approval of research.
431.112 Review by institution.
431.113 Suspension or termination of IRB approval of research.
431.114 Cooperative research.
431.115 IRB records.
431.116 General requirements for informed consent.
431.117 Documentation of informed consent.
431.118 Applications and proposals lacking definite plans for involvement of human subjects.
431.119 Research undertaken without the intention of involving human subjects.
431.120 Evaluation and disposition of applications and proposals for research to be conducted or supported by a Federal department or agency.
431.121 [Reserved]
431.122 Use of Federal funds.
431.123 Early termination of research support: Evaluation of applications and proposals.
431.124 Conditions.

Authority: 5 U.S.C. 301; 42 U.S.C. 289(a).

Carolyn W. Colvin,

Acting Commissioner of Social Security.

AGENCY FOR INTERNATIONAL DEVELOPMENT

22 CFR Part 225

List of Subjects in 22 CFR Part 225

Human research subjects, Reporting and record-keeping requirements, Research.

For the reasons stated in the preamble, the Agency for International Development proposes to revise 22 CFR part 225, as set forth at the end of the common preamble of this document.

PART 225—PROTECTION OF HUMAN SUBJECTS

Sec.
225.101 To what does this policy apply?
225.102 Definitions for purposes of this policy.
225.103 Assuring compliance with this policy—research conducted or supported by any Federal department or agency.
225.104 Exempt research.
225.105 Protection of biospecimens and identifiable private information.
225.106 [Reserved]
225.107 IRB membership.
225.108 IRB functions and operations.
225.109 IRB review of research.
225.110 Expedited review procedures for certain kinds of research involving no more than minimal risk, and for minor changes in approved research.
225.111 Criteria for IRB approval of research.
225.112 Review by institution.
225.113 Suspension or termination of IRB approval of research.
225.114 Cooperative research.
225.115 IRB records.
225.116 General requirements for informed consent.
225.117 Documentation of informed consent.
225.118 Applications and proposals lacking definite plans for involvement of human subjects.
225.119 Research undertaken without the intention of involving human subjects.
225.120 Evaluation and disposition of applications and proposals for research to be conducted or supported by a Federal department or agency.
225.121 [Reserved]
225.122 Use of Federal funds.
225.123 Early termination of research support: Evaluation of applications and proposals.
225.124 Conditions.

Authority: 5 U.S.C. 301.

Wade Warren,

Senior Deputy Assistant Administrator for Global Health, U.S. Agency for International Development.

DEPARTMENT OF JUSTICE

28 CFR Part 46

AG Order No. 3553–2015

List of Subjects in 28 CFR Part 46

Human research subjects, Reporting and record-keeping requirements, Research.

For the reasons stated in the preamble, the Department of Justice proposes to revise 28 CFR part 46, as set forth at the end of the common preamble of this document.

PART 46—PROTECTION OF HUMAN SUBJECTS

Sec.
46.101 To what does this policy apply?
46.102 Definitions for purposes of this policy.
46.103 Assuring compliance with this policy—research conducted or supported by any Federal department or agency.
46.104 Exempt research.
46.105 Protection of biospecimens and identifiable private information.
46.106 [Reserved]
46.107 IRB membership.
46.108 IRB functions and operations.
46.109 IRB review of research.
46.110 Expedited review procedures for certain kinds of research involving no more than minimal risk, and for minor changes in approved research.
46.111 Criteria for IRB approval of research.
46.112 Review by institution.
46.113 Suspension or termination of IRB approval of research.
46.114 Cooperative research.
46.115 IRB records.
46.116 General requirements for informed consent.
46.117 Documentation of informed consent.
46.118 Applications and proposals lacking definite plans for involvement of human subjects.
46.119 Research undertaken without the intention of involving human subjects.
46.120 Evaluation and disposition of applications and proposals for research to be conducted or supported by a Federal department or agency.
46.121 [Reserved]
46.122 Use of Federal funds.
46.123 Early termination of research support: Evaluation of applications and proposals.
46.124 Conditions.

Authority: 5 U.S.C. 301; 28 U.S.C. 509–510.

Sally Quillian Yates,

Deputy Attorney General.

DEPARTMENT OF LABOR

29 CFR Part 21

List of Subjects in 29 CFR Part 21

Human research subjects, Reporting and record-keeping requirements, Research.

For the reasons stated in the preamble, the Social Security Administration proposes to add 29 CFR part 21, as set forth at the end of the common preamble of this document.

PART 21—PROTECTION OF HUMAN SUBJECTS

Sec.
21.101 To what does this policy apply?
21.102 Definitions for purposes of this policy.
21.103 Assuring compliance with this policy—research conducted or supported by any Federal department or agency.
21.104 Exempt research.
21.105 Protection of biospecimens and identifiable private information.
21.106 [Reserved]
21.107 IRB membership.
21.108 IRB functions and operations.
21.109 IRB review of research.
21.110 Expedited review procedures for certain kinds of research involving no more than minimal risk, and for minor changes in approved research.
21.111 Criteria for IRB approval of research.
21.112 Review by institution.
21.113 Suspension or termination of IRB approval of research.
21.114 Cooperative research.
21.115 IRB records.
21.116 General requirements for informed consent.
21.117 Documentation of informed consent.
21.118 Applications and proposals lacking definite plans for involvement of human subjects.
21.119 Research undertaken without the intention of involving human subjects.
21.120 Evaluation and disposition of applications and proposals for research to be conducted or supported by a Federal department or agency.
21.121 [Reserved]
21.122 Use of Federal funds.
21.123 Early termination of research support: Evaluation of applications and proposals.
21.124 Conditions.

Authority: 5 U.S.C. 301; 29 U.S.C. 551.

Christopher P. Lu,

Deputy Secretary of Labor.

DEPARTMENT OF DEFENSE

32 CFR Part 219

List of Subjects in 32 CFR Part 219

Human research subjects, Reporting and record-keeping requirements, Research.

For the reasons stated in the preamble, the Department of Defense proposes to revise 32 CFR part 219, as set forth at the end of the common preamble of this document.

PART 219—PROTECTION OF HUMAN SUBJECTS

Sec.
219.101 To what does this policy apply?
219.102 Definitions for purposes of this policy.
219.103 Assuring compliance with this policy—research conducted or supported by any Federal department or agency.
219.104 Exempt research.
219.105 Protection of biospecimens and identifiable private information.
219.106 [Reserved]
219.107 IRB membership.
219.108 IRB functions and operations.
219.109 IRB review of research.
219.110 Expedited review procedures for certain kinds of research involving no more than minimal risk, and for minor changes in approved research.
219.111 Criteria for IRB approval of research.
219.112 Review by institution.
219.113 Suspension or termination of IRB approval of research.
219.114 Cooperative research.
219.115 IRB records.
219.116 General requirements for informed consent.
219.117 Documentation of informed consent.
219.118 Applications and proposals lacking definite plans for involvement of human subjects.
219.119 Research undertaken without the intention of involving human subjects.
219.120 Evaluation and disposition of applications and proposals for research to be conducted or supported by a Federal department or agency.
219.121 [Reserved]
219.122 Use of Federal funds.
219.123 Early termination of research support: Evaluation of applications and proposals.
219.124 Conditions.

Authority: 5 U.S.C. 301.

Patricia L. Toppings,

OSD Federal Register Liaison, Officer, Department of Defense.

DEPARTMENT OF EDUCATION

34 CFR Part 97

List of Subjects in 34 CFR Part 97

Human research subjects, Reporting and record-keeping requirements, Research.

For the reasons stated in the preamble, the Department of Education proposes to amend 34 CFR part 97 as follows:

PART 97—PROTECTION OF HUMAN SUBJECTS

■ 1. The authority citation for part 97 continues to read as follows:

Authority: 5 U.S.C. 301; 20 U.S.C. 1221e–3, 3474.

■ 2. Subpart A is revised as set forth at the end of the common preamble of this document.

Subpart A—Federal Policy for the Protection of Human Subjects (Basic ED Policy for Protection of Human Research Subjects)

Sec.
97.101 To what does this policy apply?
97.102 Definitions for purposes of this policy.
97.103 Assuring compliance with this policy—research conducted or supported by any Federal department or agency.
97.104 Exempt research.
97.105 Protection of biospecimens and identifiable private information.
97.106 [Reserved]
97.107 IRB membership.
97.108 IRB functions and operations.
97.109 IRB review of research.
97.110 Expedited review procedures for certain kinds of research involving no more than minimal risk, and for minor changes in approved research.
97.111 Criteria for IRB approval of research.
97.112 Review by institution.
97.113 Suspension or termination of IRB approval of research.
97.114 Cooperative research.
97.115 IRB records.
97.116 General requirements for informed consent.
97.117 Documentation of informed consent.
97.118 Applications and proposals lacking definite plans for involvement of human subjects.
97.119 Research undertaken without the intention of involving human subjects.
97.120 Evaluation and disposition of applications and proposals for research to be conducted or supported by a Federal department or agency.
97.121 [Reserved]
97.122 Use of Federal funds.
97.123 Early termination of research support: Evaluation of applications and proposals.
97.124 Conditions.

Arne Duncan,

Secretary of Education.

DEPARTMENT OF VETERANS AFFAIRS

38 CFR Part 16

List of Subjects in 38 CFR Part 16

Human research subjects, Reporting and record-keeping requirements, Research.

For the reasons stated in the preamble, the Department of Veterans Affairs proposes to revise 38 CFR part 16, as set forth at the end of the common preamble of this document.

PART 16—PROTECTION OF HUMAN SUBJECTS

Sec.
16.101 To what does this policy apply?
16.102 Definitions for purposes of this policy.
16.103 Assuring compliance with this policy—research conducted or supported by any Federal department or agency.
16.104 Exempt research.
16.105 Protection of biospecimens and identifiable private information.
16.106 [Reserved]
16.107 IRB membership.
16.108 IRB functions and operations.
16.109 IRB review of research.
16.110 Expedited review procedures for certain kinds of research involving no more than minimal risk, and for minor changes in approved research.
16.111 Criteria for IRB approval of research.
16.112 Review by institution.
16.113 Suspension or termination of IRB approval of research.
16.114 Cooperative research.
16.115 IRB records.
16.116 General requirements for informed consent.
16.117 Documentation of informed consent.
16.118 Applications and proposals lacking definite plans for involvement of human subjects.
16.119 Research undertaken without the intention of involving human subjects.
16.120 Evaluation and disposition of applications and proposals for research to be conducted or supported by a Federal department or agency.
16.121 [Reserved]
16.122 Use of Federal funds.
16.123 Early termination of research support: Evaluation of applications and proposals.
16.124 Conditions.

Authority: 5 U.S.C. 301; 38 U.S.C. 501, 7331, 7334.

Robert L. Nabors II,

Chief of Staff, U.S. Department of Veterans Affairs,

ENVIRONMENTAL PROTECTION AGENCY

40 CFR Part 26

List of Subjects in 40 CFR Part 26

Human research subjects, Reporting and record-keeping requirements, Research.

For the reasons stated in the preamble, the Environmental Protection Agency proposes to amend 40 CFR part 26 as follows:

PART 26—PROTECTION OF HUMAN SUBJECTS

■ 1. The authority citation for part 26 continues to read as follows:

Authority: 5 U.S.C. 301; 7 U.S.C. 136a(a) and 136w(a)(1); 21 U.S.C. 346a(e)(1)(C); sec. 201, Pub. L. 109–54, 119 Stat. 531.

■ 2. Subpart A is revised as set forth at the end of the common preamble of this document.

Subpart A—Basic EPA Policy for Protection of Subjects in Human Research Conducted or Supported by EPA

Sec.
26.101 To what does this policy apply?
26.102 Definitions for purposes of this policy.
26.103 Assuring compliance with this policy—research conducted or supported by any Federal department or agency.
26.104 Exempt research.
26.105 Protection of biospecimens and identifiable private information.
26.106 [Reserved]
26.107 IRB membership.
26.108 IRB functions and operations.
26.109 IRB review of research.
26.110 Expedited review procedures for certain kinds of research involving no more than minimal risk, and for minor changes in approved research.
26.111 Criteria for IRB approval of research.
26.112 Review by institution.
26.113 Suspension or termination of IRB approval of research.
26.114 Cooperative research.
26.115 IRB records.
26.116 General requirements for informed consent.
26.117 Documentation of informed consent.
26.118 Applications and proposals lacking definite plans for involvement of human subjects.
26.119 Research undertaken without the intention of involving human subjects.
26.120 Evaluation and disposition of applications and proposals for research to be conducted or supported by a Federal department or agency.
26.121 [Reserved]
26.122 Use of Federal funds.
26.123 Early termination of research support: Evaluation of applications and proposals.
26.124 Conditions.

A. Stanley Meiburg,

Acting Deputy Administrator.

DEPARTMENT OF HEALTH AND HUMAN SERVICES

45 CFR Part 46

List of Subjects in 45 CFR Part 46

Human research subjects, Reporting and record-keeping requirements, Research.

For the reasons stated in the preamble, the Department of Health and Human Services proposes to amend 45 CFR part 46 as follows:

PART 46—PROTECTION OF HUMAN SUBJECTS

■ 1. The authority citation for part 46 is revised to read as follows:

Authority: 5 U.S.C. 301; 42 U.S.C. 289.

■ 2. Subpart A is revised as set forth at the end of the common preamble of this document.

Subpart A—Basic HHS Policy for Protection of Human Research Subjects

Sec.
46.101 To what does this policy apply?
46.102 Definitions for purposes of this policy.
46.103 Assuring compliance with this policy—research conducted or supported by any Federal department or agency.
46.104 Exempt research.
46.105 Protection of biospecimens and identifiable private information.
46.106 [Reserved]
46.107 IRB membership.
46.108 IRB functions and operations.
46.109 IRB review of research.
46.110 Expedited review procedures for certain kinds of research involving no more than minimal risk, and for minor changes in approved research.
46.111 Criteria for IRB approval of research.
46.112 Review by institution.
46.113 Suspension or termination of IRB approval of research.
46.114 Cooperative research.
46.115 IRB records.
46.116 General requirements for informed consent.
46.117 Documentation of informed consent.
46.118 Applications and proposals lacking definite plans for involvement of human subjects.
46.119 Research undertaken without the intention of involving human subjects.
46.120 Evaluation and disposition of applications and proposals for research to be conducted or supported by a Federal department or agency.
46.121 [Reserved]
46.122 Use of Federal funds.
46.123 Early termination of research support: Evaluation of applications and proposals.
46.124 Conditions.

Sylvia M. Burwell,

Secretary, HHS.

NATIONAL SCIENCE FOUNDATION

45 CFR Part 690

List of Subjects in 45 CFR Part 690

Human research subjects, Reporting and record-keeping requirements, Research.

For the reasons stated in the preamble, the National Science Foundation proposes to revise 45 CFR part 690, as set forth at the end of the common preamble of this document.

PART 690—PROTECTION OF HUMAN SUBJECTS

Sec.
690.101 To what does this policy apply?
690.102 Definitions for purposes of this policy.
690.103 Assuring compliance with this policy—research conducted or supported by any Federal department or agency.
690.104 Exempt research.
690.105 Protection of biospecimens and identifiable private information.
690.106 [Reserved]
690.107 IRB membership.
690.108 IRB functions and operations.
690.109 IRB review of research.
690.110 Expedited review procedures for certain kinds of research involving no more than minimal risk, and for minor changes in approved research.
690.111 Criteria for IRB approval of research.
690.112 Review by institution.
690.113 Suspension or termination of IRB approval of research.
690.114 Cooperative research.
690.115 IRB records.
690.116 General requirements for informed consent.
690.117 Documentation of informed consent.
690.118 Applications and proposals lacking definite plans for involvement of human subjects.
690.119 Research undertaken without the intention of involving human subjects.
690.120 Evaluation and disposition of applications and proposals for research to be conducted or supported by a Federal department or agency.
690.121 [Reserved]
690.122 Use of Federal funds.
690.123 Early termination of research support: Evaluation of applications and proposals.
690.124 Conditions.

Authority: 5 U.S.C. 301.

Lawrence Rudolph,

General Counsel.

DEPARTMENT OF TRANSPORTATION

49 CFR Part 11

List of Subjects in 49 CFR Part 11

Human research subjects, Reporting and record-keeping requirements, Research.

For the reasons stated in the preamble, the Department of Transportation proposes to revise 49 CFR part 11, as set forth at the end of the common preamble of this document.

PART 11—PROTECTION OF HUMAN SUBJECTS

Sec.

11.101 To what does this policy apply?
11.102 Definitions for purposes of this policy.
11.103 Assuring compliance with this policy—research conducted or supported by any Federal department or agency.
11.104 Exempt research.
11.105 Protection of biospecimens and identifiable private information.
11.106 [Reserved]
11.107 IRB membership.
11.108 IRB functions and operations.
11.109 IRB review of research.
11.110 Expedited review procedures for certain kinds of research involving no more than minimal risk, and for minor changes in approved research.
11.111 Criteria for IRB approval of research.
11.112 Review by institution.
11.113 Suspension or termination of IRB approval of research.
11.114 Cooperative research.
11.115 IRB records.
11.116 General requirements for informed consent.
11.117 Documentation of informed consent.
11.118 Applications and proposals lacking definite plans for involvement of human subjects.
11.119 Research undertaken without the intention of involving human subjects.
11.120 Evaluation and disposition of applications and proposals for research to be conducted or supported by a Federal department or agency.
11.121 [Reserved]
11.122 Use of Federal funds.
11.123 Early termination of research support: Evaluation of applications and proposals.
11.124 Conditions.

Authority: 5 U.S.C. 301.

Anthony R. Foxx,

Secretary of Transportation.

[FR Doc. 2015–21756 Filed 9–2–15; 11:15 am]

BILLING CODE 4150–36–P

FEDERAL REGISTER

Vol. 80 Tuesday,

No. 173 September 8, 2015

Part III

Department of the Treasury

Internal Revenue Service

Privacy Act of 1974, as Amended; System of Records Notice; Notice

DEPARTMENT OF THE TREASURY

Internal Revenue Service

Privacy Act of 1974, as Amended; System of Records Notice

AGENCY: Internal Revenue Service, Treasury

ACTION: Notice of systems of records.

SUMMARY: In accordance with the requirements of the Privacy Act of 1974, as amended, 5 U.S.C. 552a, the Internal Revenue Service, Treasury, is publishing its inventory of Privacy Act systems of records.

SUPPLEMENTARY INFORMATION: Pursuant to the Privacy Act of 1974 (5 U.S.C. 552a) and the Office of Management and Budget (OMB) Circular No. A–130, the Internal Revenue Service (IRS) has completed a review of its Privacy Act systems of records notices to identify minor changes that will more accurately describe these records.

The changes throughout the document are editorial in nature and consist principally of changes to system manager titles, clarifications to the individuals or records covered, and updates to addresses.

Eleven systems of records have been amended and published to the IRS' inventory of Privacy Act notices since August 10, 2012.

The following three systems of records maintained by the IRS Division Commissioner, Wage and Investment (W&I) were amended on December 11, 2014, beginning at 79 FR 73702:

IRS 22.062—Electronic Filing Records;
IRS 24.030—Customer Account Data Engine Individual Master File; and
IRS 24.046—Customer Account Data Engine Business Master File.

The following two systems of records maintained by the IRS Director, Facilities Management and Security Services, were amended on February 11, 2015, beginning at 80 FR 7685, and March 11, 2013, beginning at 78 FR 15407, respectively:

IRS 34.013—Identification Media Files System for Employees and Others Issued IRS Identification; and
IRS 34.037—Audit Trail and Security Records.

The following system of records maintained by the IRS Director, Office of Professional Responsibility (OPR) was amended on September 14, 2012, beginning at 77 FR 56913:

IRS 37.007—Practitioner Disciplinary Records.

This publication also incorporates the changes to systems of records maintained by the IRS Chief, Criminal Investigation, as published on March 7, 2014, beginning at 79 FR 13089:

IRS 46.002—Criminal Investigation Management Information System (CIMIS) and Case Files;
IRS 46.003—Confidential Informants;
IRS 46.005—Electronic Surveillance Files;
IRS 46.015—Relocated Witnesses; and
IRS 46.050—Automated Information Analysis System.

Several existing systems of records notices included only one of a matched pair of routine uses which are standard for the IRS. The matched pair of routine uses provides for disclosure, (1) by IRS to the Department of Justice (DOJ) when IRS determines the records are relevant to DOJ's ability to provide legal assistance to the IRS, or are relevant to litigation which DOJ is handling; and (2) by IRS or DOJ before a court, tribunal, or other adjudicative body when IRS or DOJ determines the information is relevant or necessary for purposes of the proceeding. Both routine uses are included in many notices and adding the missing routine use of the pair merely clarifies that records in these systems of records may be disclosed in the same manner as similar records in other notices. Adding the first routine use clarifies that IRS can disclose records to DOJ when IRS determines the records are relevant and useful to DOJ's ability to properly perform duties on behalf of the IRS. Adding the second routine use clarifies that either the IRS or DOJ may disclose records in a proceeding before a court, tribunal, or other adjudicative body when those records are relevant and necessary to the proceeding. The following systems of records have been updated to reflect a matched pair of routine uses:

IRS 00.008—Recorded Quality Review Records;
IRS 21.001—Tax Administration Advisory Services Resources Records;
IRS 22.062—Electronic Filing Records;
IRS 34.009—Safety Program Files;
IRS 34.012—Emergency Preparedness Cadre Assignments and Alerting Roster Files;
IRS 34.013—Identification Media Files System for Employees and Others Issued IRS Identification;
IRS 34.014—Motor Vehicle Registration and Entry Pass Files;
IRS 34.016—Security Clearance Files;
IRS 34.021—Personnel Security Investigations;
IRS 48.001—Disclosure Records;
IRS 48.008—Defunct Special Service Staff Files Being Retained Because of Congressional Directive; and
IRS 60.000—Employee Protection System Records.

Additionally, IRS 36.003, General Personnel and Payroll, was updated to provide a non-exclusive list of the categories of records included under the broad category of general personnel and payroll records. The categories of records were updated to better define personnel and payroll records (*e.g.,* office/building security records, disciplinary action records, travel/moving expense records, insurance/beneficiary records, personal addresses, personal telephone numbers, personal email addresses, emergency contact information, and payroll deduction records). Providing a listing of some of these records helps define the broad reach of this system of records, while still demonstrating that all records are generally within the category of personnel materials.

Routine uses for two systems of records were updated to reflect that returns and return information may be disclosed only as authorized in Internal Revenue Code (IRC) 6103. Updates were made to:

IRS 36.003—General Personnel and Payroll; and
IRS 35.001—Reasonable Accommodation Requests.

Records retention information has been updated to reflect that Records Control Schedules 8 through 37 are now found in Document 12990, and Schedules 38 through 64 are now found in Document 12829.

Finally, system of records 22.012 will be withdrawn as of January 1, 2017, unless the IRS receives information supporting continuing maintenance of these records; the tax credit expired as of January 1, 2014, and the records are scheduled for destruction three years after the end of their usage.

The following systems are withdrawn:

Treasury/IRS

26.055, Private Collection Agency (PCA) Quality Review Records

This system is withdrawn because the use of private collection agencies was discontinued in 2009, and these records are no longer maintained.

46.009, Centralized Evaluation and Processing of Information Items (CEPIIs), Evaluation and Processing of Information (EOI)

The system is withdrawn because it duplicated records described by other systems included in the amended revisions of IRS Criminal Investigation systems.

Systems Covered by This Notice

This notice covers all systems of records maintained by the IRS as of September 8, 2015. The system notices

are reprinted in their entirety following the Table of Contents.

Helen Goff Foster,

Deputy Assistant Secretary for Privacy, Transparency, and Records.

Table of Contents

Internal Revenue Service

IRS 00.001—Correspondence Files and Correspondence Control Files
IRS 00.002—Correspondence Files: Inquiries about Enforcement Activities
IRS 00.003—Taxpayer Advocate Service and Customer Feedback and Survey Records
IRS 00.007—Employee Complaint and Allegation Referral Records
IRS 00.008—Recorded Quality Review Records
IRS 00.009—Taxpayer Assistance Center Recorded Quality Review Records
IRS 00.333—Third Party Contact Records
IRS 00.334—Third Party Contact Reprisal Records
IRS 10.001—Biographical Files, Communications and Liaison
IRS 10.004—Stakeholder Relationship Management and Subject Files
IRS 10.555—Volunteer Records
IRS 21.001—Tax Administration Advisory Services Resources Records
IRS 22.003—Annual Listing of Undelivered Refund Checks
IRS 22.011—File of Erroneous Refunds
IRS 22.012—Health Coverage Tax Credit (HCTC) Program Records
IRS 22.026—Form 1042S Index by Name of Recipient
IRS 22.027—Foreign Information System
IRS 22.028—Disclosure Authorizations for U.S. Residency Certification Letters
IRS 22.032—Individual Microfilm Retention Register
IRS 22.054—Subsidiary Accounting Files
IRS 22.060—Automated Non-Master File
IRS 22.061—Information Return Master File
IRS 22.062—Electronic Filing Records
IRS 24.030—Customer Account Data Engine Individual Master File
IRS 24.046—Customer Account Data Engine Business Master File
IRS 24.047—Audit Underreporter Case Files
IRS 26.001—Acquired Property Records
IRS 26.006—Form 2209, Courtesy Investigations
IRS 26.009—Lien Files
IRS 26.012—Offer in Compromise Files
IRS 26.013—Trust Fund Recovery Cases/One Hundred Percent Penalty Cases
IRS 26.014—Record 21, Record of Seizure and Sale of Real Property
IRS 26.019—Taxpayer Delinquent Accounts Files
IRS 26.020—Taxpayer Delinquency Investigation Files
IRS 26.021—Transferee Files
IRS 30.003—Requests for Printed Tax Materials Including Lists
IRS 30.004—Security Violations
IRS 34.003—Assignment and Accountability of Personal Property Files
IRS 34.009—Safety Program Files
IRS 34.012—Emergency Preparedness Cadre Assignments and Alerting Roster Files
IRS 34.013—Identification Media Files System for Employees and Others Issued IRS Identification
IRS 34.014—Motor Vehicle Registration and Entry Pass Files
IRS 34.016—Security Clearance Files
IRS 34.021—Personnel Security Investigations
IRS 34.022—Automated Background Investigations System (ABIS)
IRS 34.037—Audit Trail and Security Records System
IRS 35.001—Reasonable Accommodation Request Records
IRS 36.001—Appeals, Grievances and Complaints Records
IRS 36.003—General Personnel and Payroll Records
IRS 37.006—Correspondence, Miscellaneous Records and Information Management Records
IRS 37.007—Practitioner Disciplinary Records
IRS 37.009—Enrolled Agent and Enrolled Retirement Plan Agent Records
IRS 37.111—Preparer Tax Identification Number Records
IRS 42.001—Examination Administrative Files
IRS 42.002—Excise Compliance Programs
IRS 42.005—Whistleblower Office Records
IRS 42.008—Audit Information Management System
IRS 42.017—International Enforcement Program Information Files
IRS 42.021—Compliance Programs and Projects Files
IRS 42.027—Data on Taxpayers' Filing on Foreign Holdings
IRS 42.031—Anti-Money Laundering/Bank Secrecy Act (BSA) and Form 8300
IRS 42.888—Qualifying Therapeutic Discovery Project Records
IRS 44.001—Appeals Case Files
IRS 44.003—Appeals Centralized Data
IRS 44.004—Art Case Files
IRS 44.005—Expert Witness and Fee Appraiser Files
IRS 46.002—Criminal Investigation Management Information System and Case Files
IRS 46.003—Confidential Informants
IRS 46.005—Electronic Surveillance and Monitoring Records
IRS 46.015—Relocated Witnesses
IRS 46.050—Automated Information Analysis System
IRS 48.001—Disclosure Records
IRS 48.008—Defunct Special Service Staff Files Being Retained Because of Congressional Directive
IRS 49.001—Collateral and Information Requests System
IRS 49.002—Tax Treaty Information Management System
IRS 50.001—Tax Exempt & Government Entities (TE/GE) Correspondence Control Records
IRS 50.003—Tax Exempt & Government Entities (TE/GE) Reports of Significant Matters
IRS 50.222—Tax Exempt/Government Entities (TE/GE) Case Management Records
IRS 60.000—Employee Protection System Records
IRS 70.001—Individual Income Tax Returns, Statistics of Income
IRS 90.001—Chief Counsel Management Information System Records
IRS 90.002—Chief Counsel Litigation and Advice (Civil) Records
IRS 90.003—Chief Counsel Litigation and Advice (Criminal) Records
IRS 90.004—Chief Counsel Legal Processing Division Records
IRS 90.005—Chief Counsel Library Records
IRS 90.006—Chief Counsel Human Resources and Administrative Records

Internal Revenue Service (IRS)

Treasury/IRS 00.001

SYSTEM NAME:

Correspondence Files and Correspondence Control Files—Treasury/IRS.

SYSTEM LOCATION:

National Office, field and campus offices. (See the IRS Appendix below for address.)

CATEGORIES OF INDIVIDUALS COVERED BY THE SYSTEM:

Initiators of correspondence; persons upon whose behalf the correspondence is initiated (including customers and employees who are asked to complete surveys); and subjects of correspondence.

CATEGORIES OF RECORDS IN THE SYSTEM:

Correspondence received and sent with respect to matters under the jurisdiction of the IRS. Correspondence includes letters, telegrams, memoranda of telephone calls, email, and other forms of communication. Correspondence may be included in other systems of records described by specific notices.

AUTHORITY FOR MAINTENANCE OF THE SYSTEM:

5 U.S.C. 301 and 26 U.S.C. 7801.

PURPOSE:

To track correspondence including responses from voluntary surveys.

ROUTINE USES OF RECORDS MAINTAINED BY THE SYSTEM, INCLUDING CATEGORIES OF USERS AND THE PURPOSE OF SUCH USES:

Disclosure of returns and return information may be made only as provided by 26 U.S.C. 6103. All other records may be used as described below if the IRS deems that the purpose of the disclosure is compatible with the purpose for which IRS collected the records, and no privilege is asserted.

(1) Disclose information to the Department of Justice (DOJ) when seeking legal advice or for use in any proceeding, or in preparation for any proceeding, when: (a) The IRS or any component thereof; (b) any IRS employee in his or her official capacity; (c) any IRS employee in his or her

individual capacity if the IRS or DOJ has agreed to provide representation for the employee; or (d) the United States is a party to, has an interest in, or is likely to be affected by, the proceeding and the IRS determines that the records are relevant and necessary to the proceeding or advice sought.

(2) Disclose information in a proceeding (including discovery) before a court, administrative tribunal, or other adjudicative body when: (a) The IRS or any component thereof; (b) any IRS employee in his or her official capacity; (c) any IRS employee in his or her personal capacity if the IRS or DOJ has agreed to provide representation for the employee; or (d) the United States is a party to, has an interest in, or is likely to be affected by, the proceeding and the IRS or DOJ determines that the information is relevant and necessary to the proceeding. Information may be disclosed to the adjudicative body to resolve issues of relevancy, necessity, or privilege pertaining to the information.

(3) Disclose information to a Federal, state, local, or tribal agency, or other public authority that has requested information relevant or necessary to hiring or retaining an employee, or issuing or continuing a contract, security clearance, license, grant, or other benefit.

(4) Disclose information to an appropriate Federal, state, local, tribal, or foreign agency, or other public authority, responsible for implementing or enforcing, or for investigating or prosecuting the violation of, a statute, rule, regulation, order, or license, when a record on its face, or in conjunction with other records, indicates a potential violation of law or regulation and the information disclosed is relevant to any regulatory, enforcement, investigative, or prosecutorial responsibility of the receiving authority.

(5) Disclose information to foreign governments in accordance with international agreements.

(6) Disclose information to the news media as described in IRS Policy Statement P–1–183, News Coverage to Advance Deterrent Value of Enforcement Activities Encouraged, IRM 1.2.1.2.41.

(7) Disclose information to officials of labor organizations recognized under 5 U.S.C. Chapter 71 when relevant and necessary to their duties of exclusive representation.

(8) Disclose information to third parties during the course of an investigation to the extent necessary to obtain information pertinent to the investigation.

(9) To appropriate agencies, entities, and persons when: (a) The IRS suspects or has confirmed that the security or confidentiality of information in the system of records has been compromised; (b) the IRS has determined that as a result of the suspected or confirmed compromise there is a risk of harm to economic or property interests, identity theft or fraud, or harm to the security or integrity of this system or other systems or programs (whether maintained by the IRS or another agency or entity) that rely upon the compromised information; and (c) the disclosure made to such agencies, entities, and persons is reasonably necessary to assist in connection with IRS efforts to respond to the suspected or confirmed compromise and prevent, minimize, or remedy such harm.

POLICIES AND PRACTICES FOR STORING, RETRIEVING, ACCESSING, RETAINING, AND DISPOSING OF RECORDS IN THE SYSTEM:

STORAGE:

Paper records and electronic media.

RETRIEVABILITY:

By name.

SAFEGUARDS:

Access controls are not less than those published in IRM 10.8, Information Technology (IT) Security, and IRM 10.2, Physical Security Program.

RETENTION AND DISPOSAL:

Records are maintained in accordance with IRM 1.15, Records Management (also see Documents 12829 and 12990).

SYSTEM MANAGER AND ADDRESS:

System Manager may be any IRS supervisor. (See the IRS Appendix below for address.)

NOTIFICATION PROCEDURE:

Individuals seeking to determine if this system of records contains a record pertaining to themselves may inquire in accordance with instructions appearing at 31 CFR part 1, subpart C, appendix B. Inquiries should be addressed as in ''Record Access Procedures'' below.

RECORD ACCESS PROCEDURES:

Individuals seeking access to any record contained in this system of records, or seeking to contest its content, may inquire in accordance with instructions appearing at 31 CFR part 1, subpart C, appendix B. Inquiries should be addressed to the Disclosure Office for Privacy Act requests listed in the IRS Appendix below.

CONTESTING RECORD PROCEDURES:

See ''Record Access Procedures'' above.

RECORD SOURCE CATEGORIES:

Initiators of correspondence and information secured internally from other systems of records in order to prepare responses.

EXEMPTIONS CLAIMED FOR THE SYSTEM:

None.

Treasury/IRS 00.002

SYSTEM NAME:

Correspondence Files: Inquiries about Enforcement Activities—Treasury/IRS.

SYSTEM LOCATION:

National Office, field and campus offices. (See the IRS Appendix below for address.)

CATEGORIES OF INDIVIDUALS COVERED BY THE SYSTEM:

Initiators of correspondence; persons upon whose behalf the correspondence was initiated; and subjects of the correspondence. Includes individuals for whom tax liabilities exist, individuals who have made a complaint or inquiry, or individuals for whom a third party is interceding relative to an internal revenue tax matter.

CATEGORIES OF RECORDS IN THE SYSTEM:

Taxpayer name, address, and, if applicable, Taxpayer Identification Number (TIN) (*e.g.,* Social Security Number (SSN), Employer Identification Number (EIN), or similar number assigned by the IRS); chronological investigative history; other information relative to the conduct of the case; and/or the taxpayer's compliance history. Correspondence may include letters, telegrams, memoranda of telephone calls, email, and other forms of communication.

AUTHORITY FOR MAINTENANCE OF THE SYSTEM:

5 U.S.C. 301 and 26 U.S.C. 7801.

PURPOSE:

To track correspondence concerning enforcement matters.

ROUTINE USES OF RECORDS MAINTAINED IN THE SYSTEM, INCLUDING CATEGORIES OF USERS AND THE PURPOSES OF SUCH USES:

Disclosure of returns and return information may be made only as provided by 26 U.S.C. 6103. All other records may be used as described below if the IRS deems that the purpose of the disclosure is compatible with the purpose for which IRS collected the records, and no privilege is asserted.

(1) Disclose information to the Department of Justice (DOJ) when seeking legal advice or for use in any proceeding, or in preparation for any proceeding, when: (a) The IRS or any component thereof; (b) any IRS

employee in his or her official capacity; (c) any IRS employee in his or her individual capacity if the IRS or DOJ has agreed to provide representation for the employee; or (d) the United States is a party to, has an interest in, or is likely to be affected by, the proceeding and the IRS determines that the records are relevant and necessary to the proceeding or advice sought.

(2) Disclose information in a proceeding (including discovery) before a court, administrative tribunal, or other adjudicative body when: (a) The IRS or any component thereof; (b) any IRS employee in his or her official capacity; (c) any IRS employee in his or her personal capacity if the IRS or DOJ has agreed to provide representation for the employee; or (d) the United States is a party to, has an interest in, or is likely to be affected by, the proceeding and the IRS or DOJ determines that the information is relevant and necessary to the proceeding. Information may be disclosed to the adjudicative body to resolve issues of relevancy, necessity, or privilege pertaining to the information.

(3) Disclose information to a Federal, state, local, or tribal agency, or other public authority, which has requested information relevant or necessary to hiring or retaining an employee, or issuing or continuing a contract, security clearance, license, grant, or other benefit.

(4) Disclose information to an appropriate Federal, state, local, tribal, or foreign agency, or other public authority, responsible for implementing or enforcing, or for investigating or prosecuting the violation of, a statute, rule, regulation, order, or license, when a record on its face, or in conjunction with other records, indicates a potential violation of law or regulation and the information disclosed is relevant to any regulatory, enforcement, investigative, or prosecutorial responsibility of the receiving authority.

(5) Disclose information to foreign governments in accordance with international agreements.

(6) Disclose information to the news media as described in the IRS Policy Statement P–1–183, News Coverage to Advance Deterrent Value of Enforcement Activities Encouraged, IRM 1.2.1.2.41.

(7) Disclose information to officials of labor organizations recognized under 5 U.S.C. Chapter 71 when relevant and necessary to their duties of exclusive representation.

(8) Disclose information to third parties during the course of an investigation to the extent necessary to obtain information pertinent to the investigation.

(9) To appropriate agencies, entities, and persons when: (a) The IRS suspects or has confirmed that the security or confidentiality of information in the system of records has been compromised; (b) the IRS has determined that as a result of the suspected or confirmed compromise there is a risk of harm to economic or property interests, identity theft or fraud, or harm to the security or integrity of this system or other systems or programs (whether maintained by the IRS or another agency or entity) that rely upon the compromised information; and (c) the disclosure made to such agencies, entities, and persons is reasonably necessary to assist in connection with IRS efforts to respond to the suspected or confirmed compromise and prevent, minimize, or remedy such harm.

POLICIES AND PRACTICES FOR STORING, RETRIEVING, ACCESSING, RETAINING, AND DISPOSING OF RECORDS IN THE SYSTEM:

STORAGE:

Paper records and electronic media.

RETRIEVABILITY:

By name.

SAFEGUARDS:

Access controls are not less than those published in IRM 10.8, Information Technology (IT) Security, and IRM 10.2, Physical Security Program.

RETENTION AND DISPOSAL:

Records are maintained in accordance with IRM 1.15, Records Management (also see Documents 12829 and 12990).

SYSTEM MANAGER AND ADDRESS:

Division Commissioners, SB/SE, TE/GE, and W&I, and Chief, Criminal Investigation. (See the IRS Appendix below for address.)

NOTIFICATION PROCEDURE:

This system may not be accessed for purposes of determining whether the system contains a record pertaining to a particular individual; the records are exempt under 5 U.S.C. 552a(k)(2).

RECORD ACCESS PROCEDURES:

This system may not be accessed for purposes of inspection or in order to contest the content of records; the records are exempt under 5 U.S.C. 552a(k)(2).

CONTESTING RECORD PROCEDURES:

26 U.S.C. 7852(e) prohibits Privacy Act amendment of tax records.

RECORD SOURCE CATEGORIES:

This system of records contains investigatory material compiled for law enforcement purposes whose sources need not be reported.

EXEMPTIONS CLAIMED FOR THE SYSTEM:

This system has been designated exempt from sections (c)(3); (d)(1)–(4); (e)(1); (e)(4)(G)–(I); and (f) of the Privacy Act, pursuant to 5 U.S.C. 552a(k)(2). (See 31 CFR 1.36).

Treasury/IRS 00.003

SYSTEM NAME:

Taxpayer Advocate Service and Customer Feedback and Survey Records—Treasury/IRS.

SYSTEM LOCATION:

National Office, field and campus offices. (See the IRS Appendix below for address.)

CATEGORIES OF INDIVIDUALS COVERED BY THE SYSTEM:

Individuals who provide feedback (both complaints and compliments) about IRS employees, including customer responses to surveys from IRS business units and IRS employees about whom complaints and compliments are received by the Taxpayer Advocate Service.

CATEGORIES OF RECORDS IN THE SYSTEM:

Quality review and tracking information, customer feedback, and reports on current and former IRS employees and the resolution of that feedback.

AUTHORITY FOR MAINTENANCE OF THE SYSTEM:

5 U.S.C. 301; 26 U.S.C. 7801; and Sec. 1211 of Pub. L. 104–168, Taxpayer Bill of Rights (TBOR) 2.

PURPOSE:

To improve quality of service by tracking customer feedback (including complaints and compliments), and to analyze trends and to take corrective action on systemic problems.

ROUTINE USES OF RECORDS MAINTAINED IN THE SYSTEM, INCLUDING CATEGORIES OF USERS AND THE PURPOSES OF SUCH USES:

Disclosure of returns and return information may be made only as provided by 26 U.S.C. 6103. All other records may be used as described below if the IRS deems that the purpose of the disclosure is compatible with the purpose for which IRS collected the records, and no privilege is asserted.

To appropriate agencies, entities, and persons when: (a) The IRS suspects or has confirmed that the security or confidentiality of information in the system of records has been compromised; (b) the IRS has determined that as a result of the suspected or confirmed compromise

there is a risk of harm to economic or property interests, identity theft or fraud, or harm to the security or integrity of this system or other systems or programs (whether maintained by the IRS or another agency or entity) that rely upon the compromised information; and (c) the disclosure made to such agencies, entities, and persons is reasonably necessary to assist in connection with IRS efforts to respond to the suspected or confirmed compromise and prevent, minimize, or remedy such harm.

POLICIES AND PRACTICES FOR STORING, RETRIEVING, ACCESSING, RETAINING, AND DISPOSING OF RECORDS IN THE SYSTEM:

STORAGE:

Paper records and electronic media.

RETRIEVABILITY:

By taxpayer name, Taxpayer Identification Number (TIN) (*e.g.,* Social Security Number (SSN), Employer Identification Number (EIN), or similar number assigned by the IRS), and administrative case control number.

SAFEGUARDS:

Access controls are not less than those published in IRM 10.8, Information Technology (IT) Security, and IRM 10.2, Physical Security Program.

RETENTION AND DISPOSAL:

Records are maintained in accordance with IRM 1.15, Records Management (also see Documents 12829 and 12990).

SYSTEM MANAGER AND ADDRESS:

Taxpayer Advocate Service National Office and field offices or Head of the Office where the records are maintained. (See the IRS Appendix below for address.)

NOTIFICATION PROCEDURE:

Individuals seeking to determine if this system of records contains a record pertaining to themselves may inquire in accordance with instructions appearing at 31 CFR part 1, subpart C, appendix B. Inquiries should be addressed as in ''Record Access Procedures'' below.

RECORD ACCESS PROCEDURES:

Individuals seeking access to any record contained in this system of records, or seeking to contest its content, may inquire in accordance with instructions appearing at 31 CFR part 1, subpart C, appendix B. Inquiries should be addressed to the Disclosure Office for Privacy Act requests listed in the IRS Appendix below.

CONTESTING RECORD PROCEDURES:

See ''Record Access Procedures'' above.

RECORD SOURCE CATEGORIES:

Customer feedback and information from IRS employees.

EXEMPTIONS CLAIMED FOR THE SYSTEM:

None.

Treasury/IRS 00.007

SYSTEM NAME:

Employee Complaint and Allegation Referral Records—Treasury/IRS.

SYSTEM LOCATION:

Operations Support: Human Capital Office (Workforce Relations: Employee Conduct and Compliance Office). (See the IRS Appendix below for address.)

CATEGORIES OF INDIVIDUALS COVERED BY THE SYSTEM:

Current or former IRS employees or contractors of the IRS who are the subject of complaints received by the IRS, including complaints received by the Treasury Inspector General for Tax Administration (TIGTA) that are forwarded to the IRS; and individuals who submit these complaints.

CATEGORIES OF RECORDS IN THE SYSTEM:

Documents containing the complaint, allegation or other information regarding current and former IRS employees and contractors; documents reflecting investigations or other inquiries into the complaint, allegation or other information; and documents reflecting management's actions taken in response to a complaint, allegation or other information.

AUTHORITY FOR MAINTENANCE OF THE SYSTEM:

5 U.S.C. 301; 26 U.S.C. 7801; Sections 3701 and 7803 of Public Law 105–206, IRS Restructuring and Reform Act of 1998 (RRA1998); and Section 1211 of Public Law 104–168, Taxpayer Bill of Rights 2 (TBOR2).

PURPOSE:

To provide a timely and appropriate response to complaints and allegations concerning current and former IRS employees and contractors; and to advise complainants of the status, and results, of investigations or inquiries into those complaints or allegations.

ROUTINE USES OF RECORDS MAINTAINED IN THE SYSTEM, INCLUDING CATEGORIES OF USERS AND THE PURPOSES OF SUCH USES:

Disclosure of returns and return information may be made only as provided by 26 U.S.C. 6103. All other records may be used as described below if the IRS deems that the purpose of the disclosure is compatible with the purpose for which IRS collected the records, and no privilege is asserted.

(1) Disclose information to the Department of Justice (DOJ) when seeking legal advice or for use in any proceeding, or in preparation for any proceeding, when: (a) The IRS or any component thereof; (b) any IRS employee in his or her official capacity; (c) any IRS employee in his or her individual capacity if the IRS or DOJ has agreed to provide representation for the employee; or (d) the United States is a party to, has an interest in, or is likely to be affected by, the proceeding and the IRS determines that the records are relevant and necessary to the proceeding or advice sought.

(2) Disclose information in a proceeding (including discovery) before a court, administrative tribunal, or other adjudicative body when: (a) The IRS or any component thereof; (b) any IRS employee in his or her official capacity; (c) any IRS employee in his or her personal capacity if the IRS or DOJ has agreed to provide representation for the employee; or (d) the United States is a party to, has an interest in, or is likely to be affected by, the proceeding and the IRS or DOJ determines that the information is relevant and necessary to the proceeding. Information may be disclosed to the adjudicative body to resolve issues of relevancy, necessity, or privilege pertaining to the information.

(3) Disclose information to a Federal, state, local, or tribal agency, or other public authority, which has requested information relevant or necessary to hiring or retaining an employee, or issuing or continuing a contract, security clearance, license, grant, or other benefit.

(4) Disclose information to an appropriate Federal, state, local, tribal, or foreign agency, or other public authority, responsible for implementing or enforcing, or for investigating or prosecuting the violation of, a statute, rule, regulation, order, or license, when a record on its face, or in conjunction with other records, indicates a potential violation of law or regulation and the information disclosed is relevant to any regulatory, enforcement, investigative, or prosecutorial responsibility of the receiving authority.

(5) Disclose information to third parties during the course of an investigation to the extent necessary to obtain information pertinent to the investigation.

(6) Disclose information to professional organizations or associations with which individuals covered by this system of records may be affiliated, such as state bar disciplinary authorities, to meet their responsibilities in connection with the administration and maintenance of standards of conduct and discipline.

(7) Disclose information to complainants or victims to provide such persons with information and explanations concerning the progress and/or results of the investigation or case arising from the matters of which they complained and/or of which they were a victim. Information concerning the progress of the investigation or case is limited strictly to whether the investigation/case is opened or closed. Information about any disciplinary action is provided only after the subject of the action has exhausted all reasonable appeal rights.

(8) Disclose information to a contractor, including an expert witness or a consultant hired by the IRS, to the extent necessary for the performance of a contract.

(9) Disclose information to complainants or victims to provide such persons with information and explanations concerning the progress and/or results of the investigation or case arising from the matters of which they complained and/or of which they were a victim. Information concerning the progress of the investigation or case is limited strictly to whether the case is open or closed. Information about any disciplinary action is provided only after the subject of the action has exhausted all reasonable appeal rights.

(10) To appropriate agencies, entities, and persons when: (a) The IRS suspects or has confirmed that the security or confidentiality of information in the system of records has been compromised; (b) the IRS has determined that as a result of the suspected or confirmed compromise there is a risk of harm to economic or property interests, identity theft or fraud, or harm to the security or integrity of this system or other systems or programs (whether maintained by the IRS or another agency or entity) that rely upon the compromised information; and (c) the disclosure made to such agencies, entities, and persons is reasonably necessary to assist in connection with IRS efforts to respond to the suspected or confirmed compromise and prevent, minimize, or remedy such harm.

POLICIES AND PRACTICES FOR STORING, RETRIEVING, ACCESSING, RETAINING, AND DISPOSING OF RECORDS IN THE SYSTEM:

STORAGE:

Paper records and electronic media.

RETRIEVABILITY:

By name of individual who submitted the complaint, allegation or other information; or by name of the individual who is the subject of the complaint, allegation or other information.

SAFEGUARDS:

Access controls are not less than those published in IRM 10.8, Information Technology (IT) Security and IRM 10.2, Physical Security Program.

RETENTION AND DISPOSAL:

Records are maintained in accordance with IRM 1.15, Records Management (also see Documents 12829 and 12990).

SYSTEM MANAGER AND ADDRESS:

Chief Human Capital Officer (Operations Support, National Office). (See the IRS Appendix below for address.)

NOTIFICATION PROCEDURE:

This system may not be accessed for purposes of determining whether the system contains a record pertaining to a particular individual; the records are exempt under 5 U.S.C. 552a(k)(2).

RECORD ACCESS PROCEDURES:

This system may not be accessed for purposes of inspection or in order to contest the content of records; the records are exempt under 5 U.S.C. 552a(k)(2).

CONTESTING RECORD PROCEDURES:

26 U.S.C. 7852(e) prohibits Privacy Act amendment of tax records. Other records are exempt from contest as stated in ''Record Access Procedures'' above.

RECORD SOURCE CATEGORIES:

This system of records is exempt from the Privacy Act provision which requires that record source categories be reported.

EXEMPTIONS CLAIMED FOR THE SYSTEM:

This system has been designated exempt from sections (c)(3), (d), (e)(1), (e)(4)(G)–(I), and (f) of the Privacy Act pursuant to U.S.C. 552a(k)(2). (See 31 CFR 1.36).

Treasury/IRS 00.008

SYSTEM NAME:

Recorded Quality Review Records—Treasury/IRS.

SYSTEM LOCATION:

Wage & Investment (W&I) call sites. A list of these sites is available on-line at: *http://www.irs.gov/help/article/0,,id=96730,00.html.* See the IRS Appendix below for other W&I addresses.

CATEGORIES OF INDIVIDUALS COVERED BY THE SYSTEM:

Employees who respond to taxpayer assistance calls.

CATEGORIES OF RECORDS IN THE SYSTEM:

Quality review and employee performance feedback program records.

AUTHORITY FOR MAINTENANCE OF THE SYSTEM:

5 U.S.C. 301 and 26 U.S.C. 7801.

PURPOSE:

To administer quality review programs at call sites. Information maintained includes questions and other statements from taxpayers or their representatives on recordings. The primary focus of the system is to improve service of, and retrieve information by, the employee and not to focus on the taxpayer.

ROUTINE USES OF RECORDS MAINTAINED IN THE SYSTEM, INCLUDING CATEGORIES OF USERS AND THE PURPOSES OF SUCH USES:

Disclosure of returns and return information may be made only as provided by 26 U.S.C. 6103. All other records may be used as described below if the IRS deems that the purpose of the disclosure is compatible with the purpose for which IRS collected the records, and no privilege is asserted.

(1) Disclose information to the Department of Justice (DOJ) when seeking legal advice, or for use in any proceeding, or in preparation for any proceeding, when: (a) The IRS or any component thereof; (b) any IRS employee in his or her official capacity; (c) any IRS employee in his or her individual capacity if the IRS or the DOJ has agreed to provide representation for the employee; or (d) the United States is a party to, has an interest in, or is likely to be affected by the proceeding, and the IRS determines that the records are relevant and useful.

(2) Disclose information in a proceeding (including discovery) before a court, administrative tribunal, or other adjudicative body when: (a) The IRS or any component thereof; (b) any IRS employee in his or her official capacity; (c) any IRS employee in his or her personal capacity if the IRS or DOJ has agreed to provide representation for the employee; or (d) the United States is a party to, has an interest in, or is likely to be affected by, the proceeding and the IRS or DOJ determines that the information is relevant and necessary to the proceeding. Information may be disclosed to the adjudicative body to resolve issues of relevancy, necessity, or privilege pertaining to the information.

(3) Disclose information to a contractor, including an expert witness or a consultant hired by the IRS, to the extent necessary for the performance of a contract.

(4) To appropriate agencies, entities, and persons when: (a) The IRS suspects

or has confirmed that the security or confidentiality of information in the system of records has been compromised; (b) the IRS has determined that as a result of the suspected or confirmed compromise there is a risk of harm to economic or property interests, identity theft or fraud, or harm to the security or integrity of this system or other systems or programs (whether maintained by the IRS or another agency or entity) that rely upon the compromised information; and (c) the disclosure made to such agencies, entities, and persons is reasonably necessary to assist in connection with IRS efforts to respond to the suspected or confirmed compromise and prevent, minimize, or remedy such harm.

POLICIES AND PRACTICES FOR STORING, RETRIEVING, ACCESSING, RETAINING, AND DISPOSING OF RECORDS IN THE SYSTEM:

STORAGE:

Paper records and electronic media.

RETRIEVABILITY:

By IRS employee/assistor's name or identification number (*e.g.,* SEID, badge number). Recorded calls or screens are not retrieved by taxpayer name or Taxpayer Identification Number (TIN) (*e.g.,* Social Security Number (SSN), Employer Identification Number (EIN), or similar number assigned by the IRS).

SAFEGUARDS:

Access controls are not less than those provided for by IRM 10.8, Information Technology (IT) Security and IRM 10.2, Physical Security Program.

RETENTION AND DISPOSAL:

Records are maintained in accordance with IRM 1.15, Records Management (also see Documents 12829 and 12990). Audio recordings and screen capture images are kept long enough for the review and discussion process to take place, generally not more than 45 days.

SYSTEM MANAGER AND ADDRESS:

Director, Customer Account Services, W&I. (See the IRS Appendix below for address.)

NOTIFICATION PROCEDURE:

Individuals seeking to determine if this system of records contains a record pertaining to themselves may inquire in accordance with instructions appearing at 31 CFR part 1, subpart C, appendix B. Inquiries should be addressed as in ''Record Access Procedures'' below.

RECORD ACCESS PROCEDURES:

Individuals seeking access to any record contained in this system of records, or seeking to contest its content, may inquire in accordance with instructions appearing at 31 CFR part 1, subpart C, appendix B. Inquiries should be addressed to the Disclosure Office for Privacy Act requests listed in the IRS Appendix below.

CONTESTING RECORD PROCEDURES:

26 U.S.C. 7852(e) prohibits Privacy Act amendment of tax records.

RECORD SOURCE CATEGORIES:

Records in this system are provided by IRS employees identifying themselves when they provide information to assist a taxpayer.

EXEMPTIONS CLAIMED FOR THE SYSTEM:

None.

Treasury/IRS 00.009

SYSTEM NAME:

Taxpayer Assistance Center (TAC) Recorded Quality Review Records—Treasury/IRS.

SYSTEM LOCATION:

W&I Taxpayer Assistance Centers. A list of these sites is available on-line at: *http://www.irs.gov/localcontacts.* See the IRS Appendix below for other W&I addresses.

CATEGORIES OF INDIVIDUALS COVERED BY THE SYSTEM:

Employees who respond to in-person taxpayer assistance contacts.

CATEGORIES OF RECORDS IN THE SYSTEM:

Audio recordings of conversations with taxpayers, captured computer screen images of taxpayer records reviewed during the conversation, and associated records required to administer quality review and employee performance feedback programs.

AUTHORITY FOR MAINTENANCE OF THE SYSTEM:

5 U.S.C. 301 and 26 U.S.C. 7801.

PURPOSE:

To evaluate and improve employee performance and the quality of service at TAC sites.

ROUTINE USES: OF RECORDS MAINTAINED IN THE SYSTEM, INCLUDING CATEGORIES OF USERS AND THE PURPOSES OF SUCH USES:

Disclosure of returns and return information may be made only as provided by 26 U.S.C. 6103. All other records may be used as described below if the IRS deems that the purpose of the disclosure is compatible with the purpose for which IRS collected the records, and no privilege is asserted.

(1) Disclose information to the Department of Justice (DOJ) when seeking legal advice or for use in any proceeding, or in preparation for any proceeding, when: (a) The IRS or any component thereof; (b) any IRS employee in his or her official capacity; (c) any IRS employee in his or her individual capacity if the IRS or DOJ has agreed to provide representation for the employee; or (d) the United States is a party to, has an interest in, or is likely to be affected by, the proceeding and the IRS determines that the records are relevant and necessary to the proceeding or advice sought.

(2) Disclose information in a proceeding (including discovery) before a court, administrative tribunal, or other adjudicative body when: (a) The IRS or any component thereof; (b) any IRS employee in his or her official capacity; (c) any IRS employee in his or her personal capacity if the IRS or DOJ has agreed to provide representation for the employee; or (d) the United States is a party to, has an interest in, or is likely to be affected by, the proceeding and the IRS or DOJ determines that the information is relevant and necessary to the proceeding. Information may be disclosed to the adjudicative body to resolve issues of relevancy, necessity, or privilege pertaining to the information.

(3) Disclose information to an appropriate Federal, state, local, tribal, or foreign agency, or other public authority, responsible for implementing or enforcing, or for investigating or prosecuting the violation of, a statute, rule, regulation, order, or license, when a record on its face, or in conjunction with other records, indicates a potential violation of law or regulation and the information disclosed is relevant to any regulatory, enforcement, investigative, or prosecutorial responsibility of the receiving authority.

(4) Disclose information to officials of labor organizations recognized under 5 U.S.C. Chapter 71 when relevant and necessary to their duties of exclusive representation.

(5) Disclose information to a contractor, including an expert witness or a consultant hired by the IRS, to the extent necessary for the performance of a contract.

(6) Disclose information to an arbitrator, mediator, or other neutral, in the context of alternative dispute resolution, to the extent relevant and necessary for resolution of the matters presented, including asserted privileges. Information may also be disclosed to the parties in the alternative dispute resolution proceeding.

(7) Disclose information to the Office of Personnel Management, Merit Systems Protection Board, the Office of Special Counsel, or the Equal Employment Opportunity Commission when the records are relevant and

necessary to resolving personnel, discrimination, or labor management matters within the jurisdiction of these offices.

(8) Disclose information to the Federal Labor Relations Authority, including the Office of the General Counsel of that authority, the Federal Service Impasses Board, or the Federal Mediation and Conciliation Service, when the records are relevant and necessary to resolving any labor management matter within the jurisdiction of these offices.

(9) Disclose information to the Office of Government Ethics when the records are relevant and necessary to resolving any conflict of interest, conduct, financial statement reporting, or other ethics matter within the jurisdiction of that office.

(10) To appropriate agencies, entities, and persons when: (a) The IRS suspects or has confirmed that the security or confidentiality of information in the system of records has been compromised; (b) the IRS has determined that as a result of the suspected or confirmed compromise there is a risk of harm to economic or property interests, identity theft or fraud, or harm to the security or integrity of this system or other systems or programs (whether maintained by the IRS or another agency or entity) that rely upon the compromised information; and (c) the disclosure made to such agencies, entities, and persons is reasonably necessary to assist in connection with IRS efforts to respond to the suspected or confirmed compromise and prevent, minimize, or remedy such harm.

POLICIES AND PRACTICES FOR STORING, RETRIEVING, ACCESSING, RETAINING, AND DISPOSING OF RECORDS IN THE SYSTEM:

STORAGE:

Paper records and electronic media.

RETRIEVABILITY:

By name of the employee to whom they apply.

SAFEGUARDS:

Access controls are not less than those published in IRM 10.8, Information Technology (IT) Security and IRM 10.2, Physical Security Program.

RETENTION AND DISPOSAL:

Records are maintained in accordance with IRM 1.15, Records Management (also see Documents 12829 and 12990). Audio recordings and screen capture images are kept long enough for the review and discussion process to take place, generally not more than 45 days.

The agency may keep audio recordings and captured computer screen images for a longer period under certain circumstances, including, but not limited to, resolution of matters pertaining to poor employee performance, security (threat, altercation, etc.), or conduct-related issues.

SYSTEM MANAGER AND ADDRESS:

Director, Customer Account Services, W&I. (See the IRS Appendix below for address.)

NOTIFICATION PROCEDURE:

Individuals seeking to determine if this system of records contains a record pertaining to themselves may inquire in accordance with instructions appearing at 31 CFR part 1, subpart C, appendix B. Inquiries should be addressed as in ''Record Access Procedures'' below.

RECORD ACCESS PROCEDURES:

Individuals seeking access to any record contained in this system of records, or seeking to contest its content, may inquire in accordance with instructions appearing at 31 CFR part 1, subpart C, appendix B. Inquiries should be addressed to the Disclosure Office for Privacy Act requests listed in the IRS Appendix below.

CONTESTING RECORD PROCEDURES:

26 U.S.C. 7852(e) prohibits Privacy Act amendment of tax records.

RECORD SOURCE CATEGORIES:

Records in this system are provided by taxpayers, employees, and IRS taxpayer account records.

EXEMPTIONS CLAIMED FOR THE SYSTEM:

None.

Treasury/IRS 00.333

SYSTEM NAME:

Third Party Contact Records—Treasury/IRS.

SYSTEM LOCATION:

Field and campus offices. (See the IRS Appendix below for address.)

CATEGORIES OF INDIVIDUALS COVERED BY THE SYSTEM:

Individuals on whom Federal tax assessments have been made; individuals believed to be delinquent in filing Federal tax returns or in paying Federal taxes, penalties or interest; individuals who are or have been considered for examination for tax determination purposes, *i.e.,* income, estate and gift, excise or employment tax liability.

CATEGORIES OF RECORDS IN THE SYSTEM:

Records of third party contacts including the taxpayer's name; Taxpayer Identification Number (TIN) (*e.g.,* Social Security Number (SSN), Employer Identification Number (EIN), or similar number assigned by the IRS); the third party contact's name; date of contact; and IRS employee's identification number (*e.g.,* SEID, badge number).

AUTHORITY FOR MAINTENANCE OF THE SYSTEM:

5 U.S.C. 301; 26 U.S.C. 7602(c); and 7801.

PURPOSE:

To comply with 26 U.S.C. 7602(c), records document third party contacts with respect to the determination or collection of the tax liability of the taxpayer. Third party contact data is provided periodically to taxpayers and upon the taxpayer's written request.

ROUTINE USES: OF RECORDS MAINTAINED IN THE SYSTEM INCLUDING CATEGORIES OF USERS AND THE PURPOSES OF SUCH USES:

Disclosure of returns and return information may be made only as provided by 26 U.S.C. 6103. All other records may be used as described below if the IRS deems that the purpose of the disclosure is compatible with the purpose for which IRS collected the records, and no privilege is asserted.

To appropriate agencies, entities, and persons when: (a) The IRS suspects or has confirmed that the security or confidentiality of information in the system of records has been compromised; (b) the IRS has determined that as a result of the suspected or confirmed compromise there is a risk of harm to economic or property interests, identity theft or fraud, or harm to the security or integrity of this system or other systems or programs (whether maintained by the IRS or another agency or entity) that rely upon the compromised information; and (c) the disclosure made to such agencies, entities, and persons is reasonably necessary to assist in connection with IRS efforts to respond to the suspected or confirmed compromise and prevent, minimize, or remedy such harm.

POLICIES AND PRACTICES FOR STORING, RETRIEVING, ACCESSING, RETAINING, AND DISPOSING OF RECORDS IN THE SYSTEM:

STORAGE:

Paper records and electronic media.

RETRIEVABILITY:

By taxpayer's name or TIN.

SAFEGUARDS:

Access controls are not less than those published in IRM 10.8, Information Technology (IT) Security and IRM 10.2, Physical Security Program.

RETENTION AND DISPOSAL:

Records are maintained in accordance with IRM 1.15, Records Management (also see Documents 12829 and 12990).

SYSTEM MANAGER AND ADDRESS:

Director, Collection, Small Business/Self-Employed Division (SB/SE). (See the IRS Appendix below for address.)

NOTIFICATION PROCEDURE:

Individuals seeking to determine if this system of records contains a record pertaining to themselves may inquire in accordance with instructions appearing at 31 CFR part 1, subpart C, appendix B. Inquiries should be addressed as in ''Record Access Procedures'' below.

RECORD ACCESS PROCEDURES:

Individuals seeking access to any record contained in this system of records, or seeking to contest its content, may inquire in accordance with instructions appearing at 31 CFR part 1, subpart C, appendix B. Inquiries should be addressed to the Disclosure Office for Privacy Act requests listed in the IRS Appendix below.

CONTESTING RECORD PROCEDURES:

26 U.S.C. 7852(e) prohibits Privacy Act amendment of tax records.

RECORD SOURCE CATEGORIES:

Tax records of the individual; public information sources; third parties including individuals, city and state governments, other Federal agencies, taxpayer's employer, employees and/or clients, licensing and professional organizations, and foreign governments under tax treaties.

EXEMPTIONS CLAIMED FOR THE SYSTEM:

None.

Treasury/IRS 00.334

SYSTEM NAME:

Third Party Contact Reprisal Records—Treasury/IRS.

SYSTEM LOCATION:

Field and campus offices. (See the IRS Appendix below for address.)

CATEGORIES OF INDIVIDUALS COVERED BY THE SYSTEM:

Individuals on whom Federal tax assessments have been made; individuals believed to be delinquent in filing Federal tax returns or in paying Federal taxes, penalties or interest; individuals who are or have been considered for examination for tax determination purposes; *i.e.,* income, estate and gift, excise or employment tax liability.

CATEGORIES OF RECORDS IN THE SYSTEM:

Records of third party contacts as described in 26 U.S.C. 7602(c), where reprisal determinations have been made, including the taxpayer name, Taxpayer Identification Number (TIN) (*e.g.,* Social Security Number (SSN), Employer Identification Number (EIN), or similar number assigned by the IRS); date of contact; fact of reprisal determination; and IRS employee's identification number (*e.g.,* SEID, badge number).

AUTHORITY FOR MAINTENANCE OF THE SYSTEM:

5 U.S.C. 301; 26 U.S.C. 7602(c); and 7801.

PURPOSE:

To track the number of reprisal determinations made pursuant to 26 U.S.C. 7602(c)(3)(B).

ROUTINE USES: OF RECORDS MAINTAINED IN THE SYSTEM INCLUDING CATEGORIES OF USERS AND THE PURPOSES OF SUCH USES:

Disclosure of returns and return information may be made only as provided by 26 U.S.C. 6103. All other records may be used as described below if the IRS deems that the purpose of the disclosure is compatible with the purpose for which IRS collected the records, and no privilege is asserted.

To appropriate agencies, entities, and persons when: (a) The IRS suspects or has confirmed that the security or confidentiality of information in the system of records has been compromised; (b) the IRS has determined that as a result of the suspected or confirmed compromise there is a risk of harm to economic or property interests, identity theft or fraud, or harm to the security or integrity of this system or other systems or programs (whether maintained by the IRS or another agency or entity) that rely upon the compromised information; and (c) the disclosure made to such agencies, entities, and persons is reasonably necessary to assist in connection with IRS efforts to respond to the suspected or confirmed compromise and prevent, minimize, or remedy such harm.

POLICIES AND PRACTICES FOR STORING, RETRIEVING, ACCESSING, RETAINING, AND DISPOSING OF RECORDS IN THE SYSTEM:

STORAGE:

Paper records and electronic media.

RETRIEVABILITY:

By name and/or TIN.

SAFEGUARDS:

Access controls are not less than those published in IRM 10.8, Information Technology (IT) Security and IRM 10.2, Physical Security Program.

RETENTION AND DISPOSAL:

Records are maintained in accordance with IRM 1.15, Records Management (also see Documents 12829 and 12990).

SYSTEM MANAGER AND ADDRESS:

Director, Collection, SB/SE. (See the IRS Appendix below for address.)

NOTIFICATION PROCEDURE:

This system may not be accessed for purposes of determining whether the system contains a record pertaining to a particular individual; the records are exempt under 5 U.S.C. 552a(k)(2).

RECORD ACCESS PROCEDURES:

This system may not be accessed for purposes of inspection or in order to contest the content of records; the records are exempt under 5 U.S.C. 552a(k)(2).

CONTESTING RECORD PROCEDURES:

26 U.S.C. 7852(e) prohibits Privacy Act amendment of tax records.

RECORD SOURCE CATEGORIES:

This system of records is exempt from the Privacy Act provision which requires that record source categories be reported.

EXEMPTIONS CLAIMED FOR THE SYSTEM:

This system has been designated exempt from sections (c)(3); (d)(1)–(4); (e)(1); (e)(4)(G)–(I); and (f) of the Privacy Act, pursuant to 5 U.S.C. 552a(k)(2). (See 31 CFR 1.36).

Treasury/IRS 10.001

SYSTEM NAME:

Biographical Files, Communications and Liaison—Treasury/IRS.

SYSTEM LOCATION:

National Office, field and campus offices. (See the IRS Appendix below for address.)

CATEGORIES OF INDIVIDUALS COVERED BY THE SYSTEM:

IRS employees.

CATEGORIES OF RECORDS IN THE SYSTEM:

Records are biographical data and photographs of key IRS employees.

AUTHORITY FOR MAINTENANCE OF THE SYSTEM:

5 U.S.C. 301.

ROUTINE USES: OF RECORDS MAINTAINED IN THE SYSTEM, INCLUDING CATEGORIES OF USERS AND THE PURPOSES OF SUCH USES:

Records may be used as described below if the IRS deems that the purpose of the disclosure is compatible with the purpose for which IRS collected the records, and no privilege is asserted.

(1) Disclose information to the media and the public.

(2) To appropriate agencies, entities, and persons when: (a) The IRS suspects or has confirmed that the security or confidentiality of information in the system of records has been compromised; (b) the IRS has determined that as a result of the suspected or confirmed compromise there is a risk of harm to economic or property interests, identity theft or fraud, or harm to the security or integrity of this system or other systems or programs (whether maintained by the IRS or another agency or entity) that rely upon the compromised information; and (c) the disclosure made to such agencies, entities, and persons is reasonably necessary to assist in connection with IRS efforts to respond to the suspected or confirmed compromise and prevent, minimize, or remedy such harm.

POLICIES AND PRACTICES FOR STORING, RETRIEVING, ACCESSING, RETAINING, AND DISPOSING OF RECORDS IN THE SYSTEM:

STORAGE:

Paper records and electronic media.

RETRIEVABILITY:

By key employee's name.

SAFEGUARDS:

Access controls are not less than those published in IRM 10.8, Information Technology (IT) Security and IRM 10.2, Physical Security Program.

RETENTION AND DISPOSAL:

Records are maintained in accordance with IRM 1.15, Records Management (also see Documents 12829 and 12990).

SYSTEM MANAGER AND ADDRESS:

Chief, Communications & Liaison. (See the IRS Appendix below for address.)

NOTIFICATION PROCEDURE:

Individuals seeking to determine if this system of records contains a record pertaining to themselves may inquire in accordance with instructions appearing at 31 CFR part 1, subpart C, appendix B. Inquiries should be addressed as in ''Record Access Procedures'' below.

RECORD ACCESS PROCEDURES:

Individuals seeking access to any record contained in this system of records, or seeking to contest its content, may inquire in accordance with instructions appearing at 31 CFR part 1, subpart C, appendix B. Inquiries should be addressed to the Disclosure Office for Privacy Act requests listed in the IRS Appendix below.

CONTESTING RECORD PROCEDURES:

See ''Record Access Procedures'' above.

RECORD SOURCE CATEGORIES:

By employees.

EXEMPTIONS CLAIMED FOR THE SYSTEM:

None.

Treasury/IRS 10.004

SYSTEM NAME:

Stakeholder Relationship Management and Subject Files—Treasury/IRS.

SYSTEM LOCATION:

National Office, field and campus offices. (See the IRS Appendix below for address.)

CATEGORIES OF INDIVIDUALS COVERED BY THE SYSTEM:

Individuals who have stakeholder relationships with the IRS, including individuals who attend IRS forums and educational outreach meetings.

CATEGORIES OF RECORDS IN THE SYSTEM:

Records include stakeholder relationship information, correspondence, newspaper clippings, email and other forms of communication.

AUTHORITY FOR MAINTENANCE OF THE SYSTEM:

5 U.S.C. 301.

PURPOSE OF THE SYSTEM:

To track stakeholder relationships and inform individuals about tax administration.

ROUTINE USES: OF RECORDS MAINTAINED IN THE SYSTEM, INCLUDING CATEGORIES OF USERS AND THE PURPOSES OF SUCH USES:

Records may be used as described below if the IRS deems that the purpose of the disclosure is compatible with the purpose for which IRS collected the records, and no privilege is asserted.

(1) Disclose information to the media and the public.

(2) To appropriate agencies, entities, and persons when: (a) The IRS suspects or has confirmed that the security or confidentiality of information in the system of records has been compromised; (b) the IRS has determined that as a result of the suspected or confirmed compromise there is a risk of harm to economic or property interests, identity theft or fraud, or harm to the security or integrity of this system or other systems or programs (whether maintained by the IRS or another agency or entity) that rely upon the compromised information; and (c) the disclosure made to such agencies, entities, and persons is reasonably necessary to assist in connection with IRS efforts to respond to the suspected or confirmed compromise and prevent, minimize, or remedy such harm.

POLICIES AND PRACTICES FOR STORING, RETRIEVING, ACCESSING, RETAINING, AND DISPOSING OF RECORDS IN THE SYSTEM:

STORAGE:

Paper records and electronic media.

RETRIEVABILITY:

By name or administrative case control number.

SAFEGUARDS:

Access controls are not less than those published in IRM 10.8, Information Technology (IT) Security and IRM 10.2, Physical Security Program.

RETENTION AND DISPOSAL:

Records are maintained in accordance with IRM 1.15, Records Management (also see Documents 12829 and 12990).

SYSTEM MANAGER AND ADDRESS:

Chief, Communications & Liaison. (See the IRS Appendix below for address.)

NOTIFICATION PROCEDURE:

Individuals seeking to determine if this system of records contains a record pertaining to themselves may inquire in accordance with instructions appearing at 31 CFR part 1, subpart C, appendix B. Inquiries should be addressed as in ''Record Access Procedures'' below.

RECORD ACCESS PROCEDURES:

Individuals seeking access to any record contained in this system of records, or seeking to contest its content, may inquire in accordance with instructions appearing at 31 CFR part 1, subpart C, appendix B. Inquiries should be addressed to the Disclosure Office for Privacy Act requests listed in the IRS Appendix below.

CONTESTING RECORD PROCEDURES:

See ''Record Access Procedures'' above.

RECORD SOURCE CATEGORIES:

Information from news media, and correspondence within the IRS and from IRS stakeholders.

EXEMPTIONS CLAIMED FOR THE SYSTEM:

None.

Treasury/IRS 10.555

SYSTEM NAME:

Volunteer Records—Treasury/IRS.

SYSTEM LOCATION:

W&I National Office, field and campus offices. See IRS the IRS Appendix below for addresses.

CATEGORIES OF INDIVIDUALS COVERED BY THE SYSTEM:

Individuals who promote and participate in IRS volunteer programs;

and individuals who have an interest in promoting tax outreach and return preparation, including tax professionals and practitioners.

CATEGORIES OF RECORDS IN THE SYSTEM:

Volunteer names; contact information; Electronic Filing Identification Numbers (EFINs); and information to be used in program administration; and information pertaining to reviews of each site and other information about volunteer operations.

AUTHORITY FOR MAINTENANCE OF THE SYSTEM:

5 U.S.C. 301 and 26 U.S.C. 7801.

PURPOSE:

To manage IRS volunteer programs, including determining assignments of IRS resources to various volunteer programs and making recommendations for training or other quality improvement measures.

ROUTINE USES: OF RECORDS MAINTAINED IN THE SYSTEM, INCLUDING CATEGORIES OF USERS AND THE PURPOSES OF SUCH USES:

Records may be used as described below if the IRS deems that the purpose of the disclosure is compatible with the purpose for which IRS collected the records, and no privilege is asserted.

(1) Disclose information to the Department of Justice (DOJ) when seeking legal advice or for use in any proceeding, or in preparation for any proceeding, when: (a) the IRS or any component thereof; (b) any IRS employee in his or her official capacity; (c) any IRS employee in his or her individual capacity if the IRS or DOJ has agreed to provide representation for the employee; or (d) the United States is a party to, has an interest in, or is likely to be affected by, the proceeding and the IRS determines that the records are relevant and necessary to the proceeding or advice sought.

(2) Disclose information in a proceeding (including discovery) before a court, administrative tribunal, or other adjudicative body when: (a) the IRS or any component thereof; (b) any IRS employee in his or her official capacity; (c) any IRS employee in his or her personal capacity if the IRS or the Department of Justice (DOJ) has agreed to provide representation for the employee; or (d) the United States is a party to, has an interest in, or is likely to be affected by, the proceeding and the IRS or DOJ determines that the information is relevant and necessary to the proceeding. Information may be disclosed to the adjudicative body to resolve issues of relevancy, necessity, or privilege pertaining to the information.

(3) Disclose information to a contractor, including an expert witness or a consultant, hired by the IRS to the extent necessary for the performance of a contract.

(4) Disclose information to the news media as described in the IRS Policy Statement P–1–183, News Coverage to Advance Deterrent Value of Enforcement Activities Encouraged, IRM 1.2.1.2.41.

(5) Provide information to volunteers who coordinate activities and staffing at taxpayer assistance sites.

(6) To appropriate agencies, entities, and persons when: (a) the IRS suspects or has confirmed that the security or confidentiality of information in the system of records has been compromised; (b) the IRS has determined that as a result of the suspected or confirmed compromise there is a risk of harm to economic or property interests, identity theft or fraud, or harm to the security or integrity of this system or other systems or programs (whether maintained by the IRS or another agency or entity) that rely upon the compromised information; and (c) the disclosure made to such agencies, entities, and persons is reasonably necessary to assist in connection with IRS efforts to respond to the suspected or confirmed compromise and prevent, minimize, or remedy such harm.

POLICIES AND PRACTICES FOR STORING, RETRIEVING, ACCESSING, RETAINING, AND DISPOSING OF RECORDS IN THE SYSTEM:

STORAGE:

Paper records and electronic media.

RETRIEVABILITY:

By the name of the volunteer. Records pertaining to electronic filing capabilities may also be retrieved by the electronic filing identification number (EFIN).

SAFEGUARDS:

Access controls are not less than those published in IRM 10.8, Information Technology (IT) Security and IRM 10.2, Physical Security Program.

RETENTION AND DISPOSAL:

Records are maintained in accordance with IRM 1.15, Records Management (also see Documents 12829 and 12990).

SYSTEM MANAGER AND ADDRESS:

Division Commissioner, W&I. (See the IRS Appendix below for address.)

NOTIFICATION PROCEDURE:

Individuals seeking to determine if this system of records contains a record pertaining to themselves may inquire in accordance with instructions appearing at 31 CFR part 1, subpart C, appendix B. Inquiries should be addressed as in ''Record Access Procedures'' below.

RECORD ACCESS PROCEDURES:

Individuals seeking access to any record contained in this system of records may inquire in accordance with instructions appearing at 31 CFR part 1, subpart C, appendix B. Inquiries should be addressed to the Disclosure Office for Privacy Act requests listed in the IRS Appendix below.

CONTESTING RECORD PROCEDURES:

Individuals seeking to contest content of a record in this system of records may inquire in accordance with instructions appearing at 31 CFR part 1, subpart C, appendix B.

RECORD SOURCE CATEGORIES:

Treasury employees; Federal, state, or local agencies that sponsor free financial services in coordination with IRS; taxpayers who visit these sites; and volunteer individuals and organizations that provide free tax preparation and tax-related services to these taxpayers.

EXEMPTIONS CLAIMED FOR THE SYSTEM:

None.

Treasury/IRS 21.001

SYSTEM NAME:

Tax Administration Advisory Services Resources Records—Treasury/IRS.

SYSTEM LOCATION:

Office of Tax Administration Advisory Services (TAAS), LB&I (See the IRS Appendix below for address.)

CATEGORIES OF INDIVIDUALS COVERED BY THE SYSTEM:

Past and potential tax administration advisors who have served or indicated an interest in serving on advisory assignments, and selected officials engaged in tax administration and related fields for matters pertaining to international issues.

CATEGORIES OF RECORDS IN THE SYSTEM:

Applicant roster database, locator cards or lists with names, addresses, telephone numbers, and organizational affiliations of officials engaged in tax administration; work assignment or application folders of past and potential tax administration advisors, which contain employment history, information, medical abstracts, security clearances, and passport information; bio-data sketches on IRS employees and others engaged in tax administration and related fields.

AUTHORITY FOR MAINTENANCE OF THE SYSTEM:

5 U.S.C. 301 and 26 U.S.C. 7801.

PURPOSE:

To identify employees who have expressed an interest in overseas assignments, and to identify historical and current activities pertaining to international issues.

ROUTINE USES: OF RECORDS MAINTAINED IN THE SYSTEM, INCLUDING CATEGORIES OF USERS AND THE PURPOSES OF SUCH USES:

Disclosure of returns and return information may be made only as provided by 26 U.S.C. 6103. All other records may be used as described below if the IRS deems that the purpose of the disclosure is compatible with the purpose for which IRS collected the records, and no privilege is asserted.

(1) Disclose information to the Department of Justice (DOJ) when seeking legal advice or for use in any proceeding, or in preparation for any proceeding, when: (a) The IRS or any component thereof; (b) any IRS employee in his or her official capacity; (c) any IRS employee in his or her individual capacity if the IRS or DOJ has agreed to provide representation for the employee; or (d) the United States is a party to, has an interest in, or is likely to be affected by, the proceeding and the IRS determines that the records are relevant and necessary to the proceeding or advice sought.

(2) Disclose information in a proceeding (including discovery) before a court, administrative tribunal, or other adjudicative body when: (a) The IRS or any component thereof: (b) any IRS employee in his or her official capacity; (c) any IRS employee in his or her personal capacity if the IRS or the DOJ has agreed to provide representation for the employee; or (d) the United States is a part to, has an interest in, or is likely to be affected by, the proceeding, and the IRS or the DOJ determines that the information is relevant and necessary. Information may be disclosed to the adjudicative body to resolve issues of relevancy, necessity, or privilege pertaining to the information.

(3) To appropriate agencies, entities, and persons when: (a) the IRS suspects or has confirmed that the security or confidentiality of information in the system of records has been compromised; (b) the IRS has determined that as a result of the suspected or confirmed compromise there is a risk of harm to economic or property interests, identity theft or fraud, or harm to the security or integrity of this system or other systems or programs (whether maintained by the IRS or another agency or entity) that rely upon the compromised information; and (c) the disclosure made to such agencies, entities, and persons is reasonably necessary to assist in connection with IRS efforts to respond to the suspected or confirmed compromise and prevent, minimize, or remedy such harm.

POLICIES AND PRACTICES FOR STORING, RETRIEVING, ACCESSING, RETAINING, AND DISPOSING OF RECORDS IN THE SYSTEM:

STORAGE:

Paper records and electronic media.

RETRIEVABILITY:

By employee name.

SAFEGUARDS:

Access controls are not less than those published in IRM 10.8, Information Technology (IT) Security and IRM 10.2, Physical Security Program.

RETENTION AND DISPOSAL:

Records are maintained in accordance with IRM 1.15, Records Management (also see Documents 12829 and 12990).

SYSTEM MANAGER AND ADDRESS:

Division Commissioner, (LB&I). (See the IRS Appendix below for address.)

NOTIFICATION PROCEDURE:

Individuals seeking to determine if this system of records contains a record pertaining to themselves may inquire in accordance with instructions appearing at 31 CFR part 1, subpart C, appendix B. Inquiries should be addressed as in ''Record Access Procedures'' below.

RECORD ACCESS PROCEDURES:

Individuals seeking access to any record contained in this system of records, or seeking to contest its content, may inquire in accordance with instructions appearing at 31 CFR part 1, subpart C, appendix B. Inquiries should be address to the Disclosure Office for Privacy Act requests listed in the IRS Appendix below.

CONTESTING RECORD PROCEDURESS:

See ''Record Access Procedures'' above.

RECORD SOURCE CATEGORIES:

Individuals, organizations with which they are associated, or other knowledgeable tax administration experts.

EXEMPTIONS CLAIMED FOR THE SYSTEM:

None.

Treasury/IRS 22.003

SYSTEM NAME:

Annual Listing of Undelivered Refund Checks—Treasury/IRS.

SYSTEM LOCATION:

Field and campus offices. (See the IRS Appendix below for address.)

CATEGORIES OF INDIVIDUALS COVERED BY THE SYSTEM:

Taxpayers whose refund checks have been returned as undeliverable since the last Annual Listing of Undelivered Refund Checks was produced.

CATEGORIES OF RECORDS IN THE SYSTEM:

Taxpayer name, address, Taxpayer Identification Number (TIN) (*e.g.,* Social Security Number (SSN), Employer Identification Number (EIN), or similar number assigned by the IRS), and records containing tax module information (tax period, amount of credit balance and Document Locator Number (DLN)).

AUTHORITY FOR MAINTENANCE OF THE SYSTEM:

5 U.S.C. 301 and 26 U.S.C. 7801.

PURPOSE:

To keep track of refund checks returned as undeliverable.

ROUTINE USES: OF RECORDS MAINTAINED IN THE SYSTEM, INCLUDING CATEGORIES OF USERS AND THE PURPOSES OF SUCH USES:

Disclosure of returns and return information may be made only as provided by 26 U.S.C. 6103. All other records may be used as described below if the IRS deems that the purpose of the disclosure is compatible with the purpose for which IRS collected the records, and no privilege is asserted.

To appropriate agencies, entities, and persons when: (a) The IRS suspects or has confirmed that the security or confidentiality of information in the system of records has been compromised; (b) the IRS has determined that as a result of the suspected or confirmed compromise there is a risk of harm to economic or property interests, identity theft or fraud, or harm to the security or integrity of this system or other systems or programs (whether maintained by the IRS or another agency or entity) that rely upon the compromised information; and (c) the disclosure made to such agencies, entities, and persons is reasonably necessary to assist in connection with IRS efforts to respond to the suspected or confirmed compromise and prevent, minimize, or remedy such harm.

POLICIES AND PRACTICES FOR STORING, RETRIEVING, ACCESSING, RETAINING, AND DISPOSING OF RECORDS IN THE SYSTEM:

STORAGE:

Paper records and electronic media.

RETRIEVABILITY:

By taxpayer name or TIN.

SAFEGUARDS:

Access controls are not less than those published in IRM 10.8, Information

Technology (IT) Security and IRM 10.2, Physical Security Program.

RETENTION AND DISPOSAL:

Records are maintained in accordance with IRM 1.15, Records Management (also see Documents 12829 and 12990).

SYSTEM MANAGER AND ADDRESS:

Division Commissioners, W&I and SB/SE. (See the IRS Appendix below for address.)

NOTIFICATION PROCEDURE:

Individuals seeking to determine if this system of records contains a record pertaining to themselves may inquire in accordance with instructions appearing at 31 CFR part 1, subpart C, appendix B. Inquiries should be addressed as in ''Record Access Procedures'' below.

RECORD ACCESS PROCEDURES:

Individuals seeking access to any record contained in this system of records, or seeking to contest its content, may inquire in accordance with instructions appearing at 31 CFR part 1, subpart C, appendix B. Inquiries should be addressed to the Disclosure Office for Privacy Act requests listed in the IRS Appendix below.

CONTESTING RECORD PROCEDURES:

26 U.S.C. 7852(e) prohibits Privacy Act amendment of tax records.

RECORD SOURCE CATEGORIES:

Tax returns and other filings made by the individual and agency entries made in the administration of the individual's tax account.

EXEMPTIONS CLAIMED FOR THE SYSTEM:

None.

Treasury/IRS 22.011

SYSTEM NAME:

File of Erroneous Refunds—Treasury/IRS.

SYSTEM LOCATION:

Campus offices. (See the IRS Appendix below for address.)

CATEGORIES OF INDIVIDUALS COVERED BY THE SYSTEM:

Taxpayers issued erroneous refunds.

CATEGORIES OF RECORDS IN THE SYSTEM:

Case reference taxpayer name, Taxpayer Identification Number (TIN) (*e.g.,* Social Security Number (SSN), Employer Identification Number (EIN), or other similar number assigned by IRS), administrative control number, date of erroneous refund, statute expiration date, status of case, location, correspondence and research material.

AUTHORITY FOR MAINTENANCE OF THE SYSTEM:

5 U.S.C. 301 and 26 U.S.C. 7801.

PURPOSE:

To maintain records necessary to resolve erroneous refunds.

ROUTINE USES: OF RECORDS MAINTAINED IN THE SYSTEM, INCLUDING CATEGORIES OF USERS AND THE PURPOSES OF SUCH USES:

Disclosure of returns and return information may be made only as provided by 26 U.S.C. 6103. All other records may be used as described below if the IRS deems that the purpose of the disclosure is compatible with the purpose for which IRS collected the records, and no privilege is asserted.

To appropriate agencies, entities, and persons when: (a) The IRS suspects or has confirmed that the security or confidentiality of information in the system of records has been compromised; (b) the IRS has determined that as a result of the suspected or confirmed compromise there is a risk of harm to economic or property interests, identity theft or fraud, or harm to the security or integrity of this system or other systems or programs (whether maintained by the IRS or another agency or entity) that rely upon the compromised information; and (c) the disclosure made to such agencies, entities, and persons is reasonably necessary to assist in connection with IRS efforts to respond to the suspected or confirmed compromise and prevent, minimize, or remedy such harm.

POLICIES AND PRACTICES FOR STORING, RETRIEVING, ACCESSING, RETAINING, AND DISPOSING OF RECORDS IN THE SYSTEM:

STORAGE:

Paper records and electronic media.

RETRIEVABILITY:

By taxpayer name and TIN.

SAFEGUARDS:

Access controls are not less than those published in IRM 10.8, Information Technology (IT) Security and IRM 10.2, Physical Security Program.

RETENTION AND DISPOSAL:

Records are maintained in accordance with IRM 1.15, Records Management (also see Documents 12829 and 12990).

SYSTEM MANAGER AND ADDRESS:

Division Commissioners, W&I and SB/SE. (See the IRS Appendix below for address.)

NOTIFICATION PROCEDURE:

Individuals seeking to determine if this system of records contains a record pertaining to themselves may inquire in accordance with instructions appearing at 31 CFR part 1, subpart C, appendix B. Inquiries should be addressed as in ''Record Access Procedures'' below.

RECORD ACCESS PROCEDURES:

Individuals seeking access to any record contained in this system of records, or seeking to contest its content, may inquire in accordance with instructions appearing at 31 CFR part 1, subpart C, appendix B. Inquiries should be addressed to the Disclosure Office for Privacy Act requests listed in the IRS Appendix below.

CONTESTING RECORD PROCEDURES:

26 U.S.C. 7852(e) prohibits Privacy Act amendment of tax records.

RECORD SOURCE CATEGORIES:

Tax returns and other filings made by the individual and agency entries made in the administration of the individual's tax account.

EXEMPTIONS CLAIMED FOR THE SYSTEM:

None.

Treasury/IRS 22.012

SYSTEM NAME:

Health Coverage Tax Credit (HCTC) Program Records—Treasury/IRS.

SYSTEM LOCATION:

W&I National Office and HCTC contractor location offices. (See the IRS Appendix below for address.)

CATEGORIES OF INDIVIDUALS COVERED BY THE SYSTEM:

Individuals who apply for and are eligible for the credit.

CATEGORIES OF RECORDS IN THE SYSTEM:

Records required to administer the HCTC program.

AUTHORITY FOR MAINTENANCE OF THE SYSTEM:

5 U.S.C. 301, 26 U.S.C. 35, 7527, and 7801.

PURPOSE:

To administer the health care tax credit (HCTC) provisions.

ROUTINE USES: OF RECORDS MAINTAINED IN THE SYSTEM, INCLUDING CATEGORIES OF USERS AND THE PURPOSES OF SUCH USES:

Disclosure of returns and return information may be made only as provided by 26 U.S.C. 6103. All other records may be used as described below if the IRS deems that the purpose of the disclosure is compatible with the purpose for which IRS collected the records, and no privilege is asserted.

To appropriate agencies, entities, and persons when: (a) The IRS suspects or has confirmed that the security or confidentiality of information in the system of records has been compromised; (b) the IRS has determined that as a result of the suspected or confirmed compromise

there is a risk of harm to economic or property interests, identity theft or fraud, or harm to the security or integrity of this system or other systems or programs (whether maintained by the IRS or another agency or entity) that rely upon the compromised information; and (c) the disclosure made to such agencies, entities, and persons is reasonably necessary to assist in connection with IRS efforts to respond to the suspected or confirmed compromise and prevent, minimize, or remedy such harm.

POLICIES AND PRACTICES FOR STORING, RETRIEVING, ACCESSING, RETAINING, AND DISPOSING OF RECORDS IN THE SYSTEM:

STORAGE:

Paper records and electronic media.

RETRIEVABILITY:

By taxpayer name, Taxpayer Identification Number (TIN) (*e.g.,* Social Security Number (SSN), Employer Identification Number (EIN), or other similar number assigned by the IRS), or health care insurance policy number.

SAFEGUARDS:

Access controls are not less than those published in IRM 10.8, Information Technology (IT) Security, and IRM 10.2, Physical Security Program.

RETENTION AND DISPOSAL:

Records are maintained in accordance with IRM 1.15, Records Management (also see Documents 12829 and 12990).

SYSTEM MANAGER(S) AND ADDRESS:

Division Commissioner, W&I. (See the IRS Appendix below for address.)

NOTIFICATION PROCEDURE:

Individuals seeking to determine if this system of records contains a record pertaining to themselves may inquire in accordance with instructions appearing at 31 CFR part 1, subpart C, appendix B. Inquiries should be addressed as in ''Record Access Procedures'' below.

RECORD ACCESS PROCEDURES:

Individuals seeking access to any record contained in this system of records, or seeking to contest its content, may inquire in accordance with instructions appearing at 31 CFR part 1, subpart C, appendix B. Inquiries should be addressed to the Disclosure Office for Privacy Act requests listed in the IRS Appendix below. The IRS may assert 5 U.S.C. 552a(d)(5) as appropriate.

CONTESTING RECORD PROCEDURES:

26 U.S.C. 7852(e) prohibits Privacy Act amendment of tax records.

RECORD SOURCE CATEGORIES:

Individuals eligible under HCTC program; IRS taxpayer account information; Health Coverage providers; Department of Labor; Pension Benefit Guaranty Corporation; state workforce agencies, and the Department of Health and Human Services.

EXEMPTIONS CLAIMED FOR THE SYSTEM:

None.

Treasury/IRS 22.026

SYSTEM NAME:

Form 1042S Index by Name of Recipient—Treasury/IRS.

SYSTEM LOCATION:

Campus offices. (See the IRS Appendix below for address.)

CATEGORIES OF INDIVIDUALS COVERED BY THE SYSTEM:

U.S. citizens living abroad subject to federal tax withholding.

CATEGORIES OF RECORDS IN THE SYSTEM:

Records include taxpayer's name, address, country of residence and Taxpayer Identification Number (TIN) (*e.g.,* Social Security Number (SSN), Employer Identification Number (EIN), or similar number assigned by the IRS), and name of withholding agent.

AUTHORITY FOR MAINTENANCE OF THE SYSTEM:

5 U.S.C. 301 and 26 U.S.C. 7801.

PURPOSE:

To administer the back-up withholding laws and regulations.

ROUTINE USES: OF RECORDS MAINTAINED IN THE SYSTEM, INCLUDING CATEGORIES OF USERS AND THE PURPOSES OF SUCH USES:

Disclosure of returns and return information may be made only as provided by 26 U.S.C. 6103. All other records may be used as described below if the IRS deems that the purpose of the disclosure is compatible with the purpose for which IRS collected the records, and no privilege is asserted.

To appropriate agencies, entities, and persons when: (a) The IRS suspects or has confirmed that the security or confidentiality of information in the system of records has been compromised; (b) the IRS has determined that as a result of the suspected or confirmed compromise there is a risk of harm to economic or property interests, identity theft or fraud, or harm to the security or integrity of this system or other systems or programs (whether maintained by the IRS or another agency or entity) that rely upon the compromised information; and (c) the disclosure made to such agencies, entities, and persons is reasonably necessary to assist in connection with IRS efforts to respond to the suspected or confirmed compromise and prevent, minimize, or remedy such harm.

POLICIES AND PRACTICES FOR STORING, RETRIEVING, ACCESSING, RETAINING, AND DISPOSING OF RECORDS IN THE SYSTEM:

STORAGE:

Paper records and electronic media.

RETRIEVABILITY:

By taxpayer name and TIN.

SAFEGUARDS:

Access controls are not less than those published in IRM 10.8, Information Technology (IT) Security, and IRM 10.2, Physical Security Program.

RETENTION AND DISPOSAL:

Records are maintained in accordance with IRM 1.15, Records Management (also see Documents 12829 and 12990).

SYSTEM MANAGER AND ADDRESS:

Division Commissioner, (LB&I) (See the IRS Appendix below for address.)

NOTIFICATION PROCEDURE:

Individuals seeking to determine if this system of records contains a record pertaining to themselves may inquire in accordance with instructions appearing at 31 CFR part 1, subpart C, appendix B. Inquiries should be addressed as in ''Record Access Procedures'' below.

RECORD ACCESS PROCEDURES:

Individuals seeking access to any record contained in this system of records, or seeking to contest its content, may inquire in accordance with instructions appearing at 31 CFR part 1, subpart C, appendix B. Inquiries should be addressed to the Disclosure Office for Privacy Act requests listed in the IRS Appendix below. The IRS may assert 5 U.S.C. 552a(d)(5) as appropriate.

CONTESTING RECORD PROCEDURES:

26 U.S.C. 7852(e) prohibits Privacy Act amendment of tax records.

RECORD SOURCE CATEGORIES:

Tax returns and other filings made by the individual and agency entries made in the administration of the individual's tax account.

EXEMPTIONS CLAIMED FOR THE SYSTEM:

None.

Treasury/IRS 22.027

SYSTEM NAME:

Foreign Information System (FIS)—Treasury/IRS.

SYSTEM LOCATION:

Large Business and International (LB&I) National Office, field, and

campus offices. (See the IRS Appendix below for address.)

CATEGORIES OF INDIVIDUALS COVERED BY THE SYSTEM:

Individual taxpayers who file Form 5471, Information Return with Respect to a Foreign Corporation and Form 5472, Information Return of a Foreign Owned Corporation.

CATEGORIES OF RECORDS IN THE SYSTEM:

Taxpayer name, address, Taxpayer Identification Number (TIN) (*e.g.,* Social Security Number (SSN), Employer Identification Number (EIN), or similar number assigned by the IRS), foreign corporation identification, information relating to stock, U.S. shareholders, Earnings and Profits, Balance Sheet, and other available accounting information relating to a specific taxable period.

AUTHORITY FOR MAINTENANCE OF THE SYSTEM:

5 U.S.C. 301 and 26 U.S.C. 7801.

PURPOSE:

To administer laws and regulations relative to foreign owned corporations.

ROUTINE USES: OF RECORDS MAINTAINED IN THE SYSTEM, INCLUDING CATEGORIES OF USERS AND THE PURPOSES OF SUCH USES:

Disclosure of returns and return information may be made only as provided by 26 U.S.C. 6103. All other records may be used as described below if the IRS deems that the purpose of the disclosure is compatible with the purpose for which IRS collected the records, and no privilege is asserted.

To appropriate agencies, entities, and persons when: (a) The IRS suspects or has confirmed that the security or confidentiality of information in the system of records has been compromised; (b) the IRS has determined that as a result of the suspected or confirmed compromise there is a risk of harm to economic or property interests, identity theft or fraud, or harm to the security or integrity of this system or other systems or programs (whether maintained by the IRS or another agency or entity) that rely upon the compromised information; and (c) the disclosure made to such agencies, entities, and persons is reasonably necessary to assist in connection with IRS efforts to respond to the suspected or confirmed compromise and prevent, minimize, or remedy such harm.

POLICIES AND PRACTICES FOR STORING, RETRIEVING, ACCESSING, RETAINING, AND DISPOSING OF RECORDS IN THE SYSTEM:

STORAGE:

Paper records and electronic media.

RETRIEVABILITY:

Documents are stored and retrieved by Document Locator Number (DLN).

SAFEGUARDS:

Access controls are not less than those published in IRM 10.8, Information Technology (IT) Security, and IRM 10.2, Physical Security Program.

RETENTION AND DISPOSAL:

Records are maintained in accordance with IRM 1.15, Records Management (also see Documents 12829 and 12990).

SYSTEM MANAGER AND ADDRESS:

Division Commissioner, (LB&I). (See the IRS Appendix below for address.)

NOTIFICATION PROCEDURE:

Individuals seeking to determine if this system of records contains a record pertaining to themselves may inquire in accordance with instructions appearing at 31 CFR part 1, subpart C, appendix B. Inquiries should be addressed as in ''Record Access Procedures'' below.

RECORD ACCESS PROCEDURES:

Individuals seeking access to any record contained in this system of records, or seeking to contest its content, may inquire in accordance with instructions appearing at 31 CFR part 1, subpart C, appendix B. Inquiries should be addressed to the Disclosure Office for Privacy Act requests listed in the IRS Appendix below.

CONTESTING RECORD PROCEDURES:

26 U.S.C. 7852(e) prohibits Privacy Act amendment of tax records.

RECORD SOURCE CATEGORIES:

Tax returns and other filings made by the individual and agency entries made in the administration of the individual's tax account.

EXEMPTIONS CLAIMED FOR THE SYSTEM:

None.

Treasury/IRS 22.028

SYSTEM NAME:

Disclosure Authorizations for U.S. Residency Certification Letters—Treasury/IRS.

SYSTEM LOCATION:

Philadelphia Campus. (See the IRS Appendix below for address.)

CATEGORIES OF INDIVIDUALS COVERED BY THE SYSTEM:

Individuals and third parties who are subjects of correspondence and who initiate correspondence requesting U.S. Residency Certification.

CATEGORIES OF RECORDS IN THE SYSTEM:

Records relating to the individual requesting certification, including identifying information of the individual requesting certification, and records relating to the identity of third party designees authorized to receive tax information specific to the U.S. Residency Certification request.

AUTHORITY FOR MAINTENANCE OF THE SYSTEM:

5 U.S.C. 301 and 26 U.S.C. 7801.

PURPOSE:

To certify filing and payment of U.S. income tax returns and taxes to allow a reduction in foreign taxes due in accordance with various treaty provisions for U.S. citizens living abroad and U.S. domestic corporations conducting business in foreign countries.

ROUTINE USES: OF THE RECORDS MAINTAINED IN THE SYSTEM, INCLUDING CATEGORIES OF USERS AND THE PURPOSES OF SUCH USES:

Disclosure of returns and return information may be made only as provided by 26 U.S.C. 6103.

To appropriate agencies, entities, and persons when: (a) The IRS suspects or has confirmed that the security or confidentiality of information in the system of records has been compromised; (b) the IRS has determined that as a result of the suspected or confirmed compromise there is a risk of harm to economic or property interests, identity theft or fraud, or harm to the security or integrity of this system or other systems or programs (whether maintained by the IRS or another agency or entity) that rely upon the compromised information; and (c) the disclosure made to such agencies, entities, and persons is reasonably necessary to assist in connection with IRS efforts to respond to the suspected or confirmed compromise and prevent, minimize, or remedy such harm.

POLICIES AND PRACTICES FOR STORING, RETRIEVING, ACCESSING, RETAINING, AND DISPOSING OF RECORDS IN THE SYSTEM:

STORAGE:

Paper records and electronic media.

RETRIEVABILITY:

By taxpayer name and Taxpayer Identification Number (TIN) (*e.g.,* Social Security Number (SSN), Employee Identification Number (EIN) or similar number assigned by the IRS), and name of designee.

SAFEGUARDS:

Access controls are not less than those published in IRM 10.8, Information Technology (IT) Security, and IRM 10.2, Physical Security Program.

RETENTION AND DISPOSAL:

Records are maintained in accordance with IRM 1.15, Records Management (also see Documents 12829 and 12990).

SYSTEM MANAGER AND ADDRESS:

Division Commissioner, (LB&I). (See the IRS Appendix below for address.)

NOTIFICATION PROCEDURE:

Individuals seeking to determine if this system of records contains a record pertaining to themselves may inquire in accordance with instructions appearing at 31 CFR part 1, subpart C, appendix B. Inquiries should be addressed as in ''Record Access Procedures'' below.

RECORD ACCESS PROCEDURES:

Individuals seeking access to any record contained in this system of records, or seeking to contest its content, may inquire in accordance with instructions appearing at 31 CFR part 1, subpart C, appendix B. Inquiries should be addressed to the Disclosure Office for Privacy Act requests listed in the IRS Appendix below.

CONTESTING RECORD PROCEDURES:

26 U.S.C. 7852(e) prohibits Privacy Act amendment of tax records.

RECORD SOURCE CATEGORIES:

Individuals seeking certification, or persons acting on their behalf.

EXEMPTIONS CLAIMED FOR THE SYSTEM:

None.

Treasury/IRS 22.032

SYSTEM NAME:

Individual Microfilm Retention Register—Treasury/IRS.

SYSTEM LOCATION:

Computing centers and through terminals at field and campus offices. (See the IRS Appendix below for address.)

CATEGORIES OF INDIVIDUALS COVERED BY THE SYSTEM:

Individuals who file, or may be required to file, individual income tax returns (*e.g.,* Form 1040, 1040A, or 1040EZ).

CATEGORIES OF RECORDS IN THE SYSTEM:

Selected data elements that have been archived from the Individual Master File (IMF).

AUTHORITY FOR MAINTENANCE OF THE SYSTEM:

5 U.S.C. 301 and 26 U.S.C. 7801.

PURPOSE:

To archive individual tax account information after a certain period of inactivity on the master file in order not to overburden the computer system required for active accounts.

ROUTINE USES: OF RECORDS MAINTAINED IN THE SYSTEM, INCLUDING CATEGORIES OF USERS AND THE PURPOSES OF SUCH USES:

Disclosure of returns and return information may be made only as provided by 26 U.S.C. 6103. All other records may be used as described below if the IRS deems that the purpose of the disclosure is compatible with the purpose for which IRS collected the records, and no privilege is asserted.

To appropriate agencies, entities, and persons when: (a) The IRS suspects or has confirmed that the security or confidentiality of information in the system of records has been compromised; (b) the IRS has determined that as a result of the suspected or confirmed compromise there is a risk of harm to economic or property interests, identity theft or fraud, or harm to the security or integrity of this system or other systems or programs (whether maintained by the IRS or another agency or entity) that rely upon the compromised information; and (c) the disclosure made to such agencies, entities, and persons is reasonably necessary to assist in connection with IRS efforts to respond to the suspected or confirmed compromise and prevent, minimize, or remedy such harm.

POLICIES AND PRACTICES FOR STORING, RETRIEVING, ACCESSING, RETAINING, AND DISPOSING OF RECORDS IN THE SYSTEM:

STORAGE:

Paper records and electronic media.

RETRIEVABILITY:

By individual taxpayer name Taxpayer Identification Number (TIN) (*e.g.,* Social Security Number (SSN), Employer Identification Number (EIN), or similar number assigned by the IRS), tax period, name, and type of tax.

SAFEGUARDS:

Access controls are not less than those published in IRM 10.8, Information Technology (IT) Security, and IRM 10.2, Physical Security Program.

RETENTION AND DISPOSAL:

Records are maintained in accordance with IRM 1.15, Records Management (also see Documents 12829 and 12990).

SYSTEM MANAGER AND ADDRESS:

Directors, Computing Centers. (See the IRS Appendix below for address.)

NOTIFICATION PROCEDURE:

Individuals seeking to determine if this system of records contains a record pertaining to themselves may inquire in accordance with instructions appearing at 31 CFR part 1, subpart C, appendix B. Inquiries should be addressed as in ''Record Access Procedures'' below.

RECORD ACCESS PROCEDURES:

Individuals seeking access to any record contained in this system of records, or seeking to contest its content, may inquire in accordance with instructions appearing at 31 CFR part 1, subpart C, appendix B. Inquiries should be addressed to the Disclosure Office for Privacy Act requests listed in the IRS Appendix below.

CONTESTING RECORD PROCEDURES:

26 U.S.C. 7852(e) prohibits Privacy Act amendment of tax records.

RECORD SOURCE CATEGORIES:

Tax returns and other filings made by the individual and agency entries made in the administration of the individual's tax account.

EXEMPTIONS CLAIMED FOR THE SYSTEM:

None.

Treasury/IRS 22.054

SYSTEM NAME:

Subsidiary Accounting Files—Treasury/IRS.

SYSTEM LOCATION:

Campuses. (See the IRS Appendix below for address.)

CATEGORIES OF INDIVIDUALS COVERED BY THE SYSTEM:

Taxpayers affected by one or more of the transactions reflected in the categories of records listed below.

CATEGORIES OF RECORDS IN THE SYSTEM:

Documents containing name, address, Taxpayer Identification Number (TIN) (*e.g.,* Social Security Number (SSN), Employer Identification Number (EIN), or similar number assigned by the IRS), and accounting information relevant to various transactions related to unapplied credits and payments, property held by the IRS, erroneous payments, accounts transferred, funds collected for other agencies, abatements and/or assessments of tax, uncollectible accounts, and Offers-in-Compromise.

AUTHORITY FOR MAINTENANCE OF THE SYSTEM:

5 U.S.C. 301 and 26 U.S.C. 7801.

PURPOSE:

To administer the accounting files relevant to the types of transactions described in ''CATEGORIES OF RECORDS IN THE SYSTEM:'' above.

ROUTINE USES: OF RECORDS MAINTAINED IN THE SYSTEM, INCLUDING CATEGORIES OF USERS AND THE PURPOSES OF SUCH USES:

Disclosure of returns and return information may be made only as provided by 26 U.S.C. 6103. All other records may be used as described below if the IRS deems that the purpose of the disclosure is compatible with the purpose for which IRS collected the records, and no privilege is asserted.

To appropriate agencies, entities, and persons when: (a) The IRS suspects or has confirmed that the security or confidentiality of information in the system of records has been compromised; (b) the IRS has determined that as a result of the suspected or confirmed compromise there is a risk of harm to economic or property interests, identity theft or fraud, or harm to the security or integrity of this system or other systems or programs (whether maintained by the IRS or another agency or entity) that rely upon the compromised information; and (c) the disclosure made to such agencies, entities, and persons is reasonably necessary to assist in connection with IRS efforts to respond to the suspected or confirmed compromise and prevent, minimize, or remedy such harm.

POLICIES AND PRACTICES FOR STORING, RETRIEVING, ACCESSING, RETAINING, AND DISPOSING OF RECORDS IN THE SYSTEM:

STORAGE:

Paper records and electronic media.

RETRIEVABILITY:

By taxpayer name and TIN, or document locator number (DLN).

SAFEGUARDS:

Access controls are not less than those published in IRM 10.8, Information Technology (IT) Security, and IRM 10.2, Physical Security Program.

RETENTION AND DISPOSAL:

Records are maintained in accordance with IRM 1.15, Records Management (also see Documents 12829 and 12990).

SYSTEM MANAGER AND ADDRESS:

Division Commissioners, W&I and SB/SE. (See the IRS Appendix below for address.)

NOTIFICATION PROCEDURE:

Individuals seeking to determine if this system of records contains a record pertaining to themselves may inquire in accordance with instructions appearing at 31 CFR part 1, subpart C, appendix B. Inquiries should be addressed as in ''Record Access Procedures'' below.

RECORD ACCESS PROCEDURES:

Individuals seeking access to any record contained in this system of records, or seeking to contest its content, may inquire in accordance with instructions appearing at 31 CFR part 1, subpart C, appendix B. Inquiries should be addressed to the Disclosure Office for Privacy Act requests listed in the IRS Appendix below.

CONTESTING RECORD PROCEDURES:

26 U.S.C. 7852(e) prohibits Privacy Act amendment of tax records.

RECORD SOURCE CATEGORIES:

Tax returns and other filings made by the individual and agency entries made in the administration of the individual's tax account.

EXEMPTIONS CLAIMED FOR THE SYSTEM:

None.

Treasury/IRS 22.060

SYSTEM NAME:

Automated Non-Master File (ANMF)—Treasury/IRS.

SYSTEM LOCATION:

Computing Centers and through terminals at field and campus offices. (See the IRS Appendix below for address.)

CATEGORIES OF INDIVIDUALS COVERED BY THE SYSTEM:

Taxpayers whose accounts are not compatible with the normal master file processes.

CATEGORIES OF RECORDS IN THE SYSTEM:

Taxpayer name, address, Taxpayer Identification Number (TIN) (*e.g.,* Social Security Number (SSN), Employer Identification Number (EIN), or similar number assigned by the IRS) and information that cannot be input into the Master File, including child support payment information from the states.

AUTHORITY FOR MAINTENANCE OF THE SYSTEM:

5 U.S.C. 301 and 26 U.S.C. 7801.

PURPOSE:

To track taxpayer account information that is not input to the Master File.

ROUTINE USES: OF RECORDS MAINTAINED IN THE SYSTEM, INCLUDING CATEGORIES OF USERS AND THE PURPOSES OF SUCH USES:

Disclosure of returns and return information may be made only as provided by 26 U.S.C. 6103. All other records may be used as described below if the IRS deems that the purpose of the disclosure is compatible with the purpose for which IRS collected the records, and no privilege is asserted.

To appropriate agencies, entities, and persons when: (a) The IRS suspects or has confirmed that the security or confidentiality of information in the system of records has been compromised; (b) the IRS has determined that as a result of the suspected or confirmed compromise there is a risk of harm to economic or property interests, identity theft or fraud, or harm to the security or integrity of this system or other systems or programs (whether maintained by the IRS or another agency or entity) that rely upon the compromised information; and (c) the disclosure made to such agencies, entities, and persons is reasonably necessary to assist in connection with IRS efforts to respond to the suspected or confirmed compromise and prevent, minimize, or remedy such harm.

POLICIES AND PRACTICES FOR STORING, RETRIEVING, ACCESSING, RETAINING, AND DISPOSING OF RECORDS IN THE SYSTEM:

STORAGE:

Paper records and electronic media.

RETRIEVABILITY:

By taxpayer name and TIN, or document locator number (DLN).

SAFEGUARDS:

Access controls are not less than those published in IRM 10.8, Information Technology (IT) Security, and IRM 10.2, Physical Security Program.

RETENTION AND DISPOSAL:

Records are maintained in accordance with IRM 1.15, Records Management (also see Documents 12829 and 12990).

SYSTEM MANAGER AND ADDRESS:

Division Commissioners, W&I and SB/SE. (See the IRS Appendix below for address.)

NOTIFICATION PROCEDURE:

Individuals seeking to determine if this system of records contains a record pertaining to themselves may inquire in accordance with instructions appearing at 31 CFR part 1, subpart C, appendix B. Inquiries should be addressed as in ''Record Access Procedures'' below.

RECORD ACCESS PROCEDURES:

Individuals seeking access to any record contained in this system of records, or seeking to contest its content, may inquire in accordance with instructions appearing at 31 CFR part 1, subpart C, appendix B. Inquiries should be addressed to the Disclosure Office for Privacy Act requests listed in the IRS Appendix below.

CONTESTING RECORD PROCEDURES:

26 U.S.C. 7852(e) prohibits Privacy Act amendment of tax records.

RECORD SOURCE CATEGORIES:

Tax returns and other filings made by the individual and agency entries made in the administration of the individual's account.

EXEMPTIONS CLAIMED FOR THE SYSTEM:

None.

Treasury/IRS 22.061

SYSTEM NAME:

Information Return Master File (IRMF)—Treasury/IRS.

SYSTEM LOCATION:

Computing Centers and through terminals at field and campus offices. (See the IRS Appendix below for address.)

CATEGORIES OF INDIVIDUALS COVERED BY THE SYSTEM:

Individual payors and payees of various types of income for which information reporting is required (*e.g.,* wages, dividends, interest, etc.)

CATEGORIES OF RECORDS IN THE SYSTEM:

Information returns.

AUTHORITY FOR MAINTENANCE OF THE SYSTEM:

5 U.S.C. 301 and 26 U.S.C. 7801.

PURPOSE:

To administer tax accounts related to the filing of information returns.

ROUTINE USES: OF RECORDS MAINTAINED IN THE SYSTEM, INCLUDING CATEGORIES OF USERS AND THE PURPOSES OF SUCH USES:

Disclosure of returns and return information may be made only as provided by 26 U.S.C. 6103. All other records may be used as described below if the IRS deems that the purpose of the disclosure is compatible with the purpose for which IRS collected the records, and no privilege is asserted.

To appropriate agencies, entities, and persons when: (a) The IRS suspects or has confirmed that the security or confidentiality of information in the system of records has been compromised; (b) the IRS has determined that as a result of the suspected or confirmed compromise there is a risk of harm to economic or property interests, identity theft or fraud, or harm to the security or integrity of this system or other systems or programs (whether maintained by the IRS or another agency or entity) that rely upon the compromised information; and (c) the disclosure made to such agencies, entities, and persons is reasonably necessary to assist in connection with IRS efforts to respond to the suspected or confirmed compromise and prevent, minimize, or remedy such harm.

POLICIES AND PRACTICES FOR STORING, RETRIEVING, ACCESSING, RETAINING, AND DISPOSING OF RECORDS IN THE SYSTEM:

STORAGE:

Paper records and electronic media.

RETRIEVABILITY:

By payor and payee name and Taxpayer Identification Number (TIN) (*e.g.,* Social Security Number (SSN), Employer Identification Number (EIN), or similar number assigned by the IRS).

SAFEGUARDS:

Access controls are not less than those published in IRM 10.8, Information Technology (IT) Security, and IRM 10.2, Physical Security Program.

RETENTION AND DISPOSAL:

Records are maintained in accordance with IRM 1.15, Records Management (also see Documents 12829 and 12990).

SYSTEM MANAGER AND ADDRESS:

Division Commissioner, W&I. (See the IRS Appendix below for address.)

NOTIFICATION PROCEDURE:

This system may not be accessed for purposes of determining whether the system contains a record pertaining to a particular individual; the records are exempt under 5 U.S.C. 552a(k)(2).

RECORD ACCESS PROCEDURES:

This system may not be accessed for purposes of inspection or in order to contest the content of records; the records are exempt under 5 U.S.C. 552a(k)(2).

CONTESTING RECORD PROCEDURES:

26 U.S.C. 7852(e) prohibits Privacy Act amendment of tax records.

RECORD SOURCE CATEGORIES:

This system of records contains investigatory material compiled for law enforcement purposes whose sources need not be reported.

EXEMPTIONS CLAIMED FOR THE SYSTEM:

This system has been designated exempt from sections (c)(3); (d)(1)–(4); (e)(1); (e)(4)(G), (H), (I); and (f) of the Privacy Act, pursuant to 5 U.S.C. 552a(k)(2). (See 31 CFR 1.36).

Treasury/IRS 22.062

SYSTEM NAME:

Electronic Filing Records—Treasury/IRS.

SYSTEM LOCATION:

National Office, field and campus offices. (See the IRS Appendix below for address.)

CATEGORIES OF INDIVIDUALS COVERED BY THE SYSTEM:

Electronic return providers (electronic return preparers, electronic return collectors, electronic return originators, electronic filing transmitters, individual filing software developers) who have applied to participate, are participating, or have been rejected, expelled or suspended from participation, in the electronic filing program (including Volunteer Income Tax Assistance (VITA) volunteers). Individuals who attend, or have indicated interest in attending, seminars and marketing programs to encourage electronic filing and improve electronic filing programs (including individuals who provide opinions or suggestions to improve electronic filing programs), or who otherwise indicate interest in participating in electronic filing programs.

CATEGORIES OF RECORDS IN THE SYSTEM:

Records pertaining to individual electronic filing providers, including applications to participate in electronic filing, credit reports, reports of misconduct, law enforcement records, Device ID, and other information from investigations into suitability for participation. Records pertaining to the marketing of electronic filing, including surveys and opinions about improving electronic filing programs.

AUTHORITY FOR MAINTENANCE OF THE SYSTEM:

5 U.S.C. 301, 26 U.S.C. 6011, 6012, and 7803.

PURPOSE:

To administer and market electronic filing programs.

ROUTINE USES: OF RECORDS MAINTAINED IN THE SYSTEM, INCLUDING CATEGORIES OF USERS AND THE PURPOSES OF SUCH USES:

Disclosure of returns and return information may be made only as provided by 26 U.S.C. 6103. All other records may be used as described below if the IRS deems that the purpose of the disclosure is compatible with the purpose for which IRS collected the records, and no privilege is asserted.

(1) Disclose information to the Department of Justice (DOJ) when seeking legal advice, or for use in any proceeding, or in preparation for any proceeding, when: (a) The IRS or any component thereof; (b) any IRS employee in his or her official capacity; (c) any IRS employee in his or her individual capacity if the IRS or the DOJ has agreed to provide representation for the employee; or (d) the United States is a party to, has an interest in, or is likely to be affected by the proceeding,

and the IRS determines that the records are relevant and useful.

(2) Disclose information in a proceeding (including discovery) before a court, administrative tribunal, or other adjudicative body when: (a) The IRS or any component thereof; (b) any IRS employee in his or her official capacity; (c) any IRS employee in his or her personal capacity if the IRS or DOJ has agreed to provide representation for the employee; or (d) the United States is a party to, has an interest in, or is likely to be affected by, the proceeding and the IRS or DOJ determines that the information is relevant and necessary to the proceeding. Information may be disclosed to the adjudicative body to resolve issues of relevancy, necessity, or privilege pertaining to the information.

(3) Disclose information to a Federal, state, local, or tribal agency, or other public authority, which has requested information relevant or necessary to hiring or retaining an employee, or issuing or continuing a contract, security clearance, license, grant, or other benefit.

(4) Disclose information to an appropriate Federal, state, local, tribal, or foreign agency, or other public authority, responsible for implementing or enforcing, or for investigating or prosecuting the violation of, a statute, rule, regulation, order, or license, when a record on its face, or in conjunction with other records, indicates a potential violation of law or regulation and the information disclosed is relevant to any regulatory, enforcement, investigative, or prosecutorial responsibility of the receiving authority.

(5) Disclose information to third parties during the course of an investigation to the extent necessary to obtain information pertinent to the investigation.

(6) Disclose information to the news media as described in the IRS Policy Statement P–1–183, News Coverage to Advance Deterrent Value of Enforcement Activities Encouraged, IRM 1.2.1.2.41.

(7) Disclose information to a contractor, including an expert witness or a consultant, hired by the IRS, to the extent necessary for the performance of a contract.

(8) Disclose information to state taxing authorities to promote joint and state electronic filing, including marketing such programs and enforcing the legal and administrative requirements of such programs.

(9) Disclose to the public the names and addresses of electronic return originators, electronic return preparers, electronic return transmitters, and individual filing software developers, who have been suspended, removed, or otherwise disciplined. The Service may also disclose the effective date and duration of the suspension, removal, or other disciplinary action.

(10) To appropriate agencies, entities, and persons when: (a) The IRS suspects or has confirmed that the security or confidentiality of information in the system of records has been compromised; (b) the IRS has determined that as a result of the suspected or confirmed compromise there is a risk of harm to economic or property interests, identity theft or fraud, or harm to the security or integrity of this system or other systems or programs (whether maintained by the IRS or another agency or entity) that rely upon the compromised information; and (c) the disclosure made to such agencies, entities, and persons is reasonably necessary to assist in connection with IRS efforts to respond to the suspected or confirmed compromise and prevent, minimize, or remedy such harm.

POLICIES AND PRACTICES FOR STORING, RETRIEVING, ACCESSING, RETAINING, AND DISPOSING OF RECORDS IN THE SYSTEM:

STORAGE:

Paper records and magnetic media.

RETRIEVABILITY:

By electronic filing provider name or Taxpayer Identification Number (TIN) (*e.g.,* Social Security Number (SSN), Employer Identification Number (EIN), or similar number assigned by the IRS), or document control number (DCN).

SAFEGUARDS:

Access controls are not less than those published in IRM 10.8, Information Technology (IT) Security, and IRM 10.2, Physical Security Program.

RETENTION AND DISPOSAL:

Records are maintained in accordance with IRM 1.15, Records Management (also see Documents 12829 and 12990).

SYSTEM MANAGER AND ADDRESS:

Director, Return Preparer Office. (See the IRS Appendix below for address.)

NOTIFICATION PROCEDURE:

Individuals seeking to determine if this system of records contains a record pertaining to themselves may inquire in accordance with instructions appearing at 31 CFR part 1, subpart C, appendix B. Inquiries should be addressed as in ''Record Access Procedures'' below.

RECORD ACCESS PROCEDURES:

Individuals seeking access to any record contained in this system of records, or seeking to contest its content, may inquire in accordance with instructions appearing at 31 CFR part 1, subpart C, appendix B. Inquiries should be addressed to the Disclosure Office for Privacy Act requests listed in the IRS Appendix below.

CONTESTING RECORD PROCEDURES:

26 U.S.C. 7852(e) prohibits Privacy Act amendment of tax records. See ''Record Access Procedures'' above for records that are not tax records.

RECORD SOURCE CATEGORIES:

(1) Electronic filing providers; (2) informants and third party witnesses; (3) city and state governments; (4) IRS and other Federal agencies; (5) professional organizations; (6) business entities; and (7) participants in marketing efforts or who have otherwise indicated interest in electronic filing programs.

EXEMPTIONS CLAIMED FOR THE SYSTEM:

None.

Treasury/IRS 24.030

SYSTEM NAME:

Customer Account Data Engine (CADE) Individual Master File (IMF)—Treasury/IRS.

SYSTEM LOCATION:

Computing Centers and through terminals at field and campus offices. (See the IRS Appendix below for address.).

CATEGORIES OF INDIVIDUALS COVERED BY THE SYSTEM:

Individuals who file Federal Individual Income Tax Returns; individuals who file other information filings; and individuals operating under powers of attorney.

CATEGORIES OF RECORDS IN THE SYSTEM:

Tax records for each applicable tax period or year, representative authorization information (including Centralized Authorization Files (CAF)), Device ID and a code identifying taxpayers who threatened or assaulted IRS employees. An indicator will be added to any taxpayer's account if a state reports to IRS that the taxpayer owes past due child and/or spousal support payments.

AUTHORITY FOR MAINTENANCE OF THE SYSTEM:

5 U.S.C. 301 and 26 U.S.C. 7801.

PURPOSE:

To maintain records of tax returns, return transactions, and authorized taxpayer representatives.

ROUTINE USES: OF RECORDS MAINTAINED IN THE SYSTEM, INCLUDING CATEGORIES OF USERS AND THE PURPOSES OF SUCH USES:

Disclosure of returns and return information may be made only as provided by 26 U.S.C. 6103. All other records may be used as described below if the IRS deems that the purpose of the disclosure is compatible with the purpose for which IRS collected the records, and no privilege is asserted.

To appropriate agencies, entities, and persons when: (a) The IRS suspects or has confirmed that the security or confidentiality of information in the system of records has been compromised; (b) the IRS has determined that as a result of the suspected or confirmed compromise there is a risk of harm to economic or property interests, identity theft or fraud, or harm to the security or integrity of this system or other systems or programs (whether maintained by the IRS or another agency or entity) that rely upon the compromised information; and (c) the disclosure made to such agencies, entities, and persons is reasonably necessary to assist in connection with IRS efforts to respond to the suspected or confirmed compromise and prevent, minimize, or remedy such harm.

POLICIES AND PRACTICES FOR STORING, RETRIEVING, ACCESSING, RETAINING, AND DISPOSING OF RECORDS IN THE SYSTEM:

STORAGE:

Paper records and electronic media.

RETRIEVABILITY:

By taxpayer name and Taxpayer Identification Number (TIN) (*e.g.,* Social Security Number (SSN), Employer Identification Number (EIN), or other similar number assigned by the IRS), or document locator number (DLN), or Device ID

SAFEGUARDS:

Access controls are not less than those published in IRM 10.8, Information Technology (IT) Security, and IRM 10.2, Physical Security Program.

RETENTION AND DISPOSAL:

Records are maintained in accordance with IRM 1.15, Records Management (also see Documents 12829 and 12990).

SYSTEM MANAGER AND ADDRESS:

Division Commissioner, W&I. (See the IRS Appendix below for address.)

NOTIFICATION PROCEDURE:

Individuals seeking to determine if this system of records contains a record pertaining to themselves may inquire in accordance with instructions appearing at 31 CFR part 1, subpart C, appendix B. Inquiries should be addressed as in ''Record Access Procedures'' below.

RECORD ACCESS PROCEDURES:

Individuals seeking access to any record contained in this system of records, or seeking to contest its content, may inquire in accordance with instructions appearing at 31 CFR part 1, subpart C, appendix B. Inquiries should be addressed to the Disclosure Office for Privacy Act requests listed in the IRS Appendix below.

CONTESTING RECORD PROCEDURES:

26 U.S.C. 7852(e) prohibits Privacy Act amendment of tax records.

RECORD SOURCE CATEGORIES:

Tax returns and other filings made by the individual or taxpayer representative and agency entries made in the administration of the individual's tax account.

EXEMPTIONS CLAIMED FOR THE SYSTEM:

None.

Treasury/IRS 24.046

SYSTEM NAME:

Customer Account Data Engine Business Master File—Treasury/IRS.

SYSTEM LOCATION:

Computing Centers and through terminals at field and campus offices. (See the IRS Appendix below for address.)

CATEGORIES OF INDIVIDUALS COVERED BY THE SYSTEM:

Individuals who file business tax and information returns; individuals who file other information filings; and individuals operating under powers of attorney for these businesses.

CATEGORIES OF RECORDS IN THE SYSTEM:

Tax records for each applicable tax year or period, including employment tax returns, partnership returns, excise tax returns, retirement and employee plan returns, wagering returns, estate tax returns; information returns; representative authorization information; and Device ID

AUTHORITY FOR MAINTENANCE OF THE SYSTEM:

5 U.S.C. 301 and 26 U.S.C. 7801.

PURPOSE:

To maintain records of business tax returns, return transactions, and authorized taxpayer representatives.

ROUTINE USES: OF RECORDS MAINTAINED IN THE SYSTEM, INCLUDING CATEGORIES OF USERS AND THE PURPOSES OF SUCH USES:

Disclosure of returns and return information may be made only as provided by 26 U.S.C. 6103. All other records may be used as described below if the IRS deems that the purpose of the disclosure is compatible with the purpose for which IRS collected the records, and no privilege is asserted.

To appropriate agencies, entities, and persons when: (a) The IRS suspects or has confirmed that the security or confidentiality of information in the system of records has been compromised; (b) the IRS has determined that as a result of the suspected or confirmed compromise there is a risk of harm to economic or property interests, identity theft or fraud, or harm to the security or integrity of this system or other systems or programs (whether maintained by the IRS or another agency or entity) that rely upon the compromised information; and (c) the disclosure made to such agencies, entities, and persons is reasonably necessary to assist in connection with IRS efforts to respond to the suspected or confirmed compromise and prevent, minimize, or remedy such harm.

POLICIES AND PRACTICES FOR STORING, RETRIEVING, ACCESSING, RETAINING, AND DISPOSING OF RECORDS IN THE SYSTEM:

STORAGE:

Paper records and electronic media.

RETRIEVABILITY:

By electronic filing provider name or Taxpayer Identification Number (TIN) (*e.g.,* Social Security Number (SSN), Employer Identification Number (EIN), or other similar number assigned by the IRS), document control number (DCN), or Device ID

SAFEGUARDS:

Access controls are not less than those published in IRM 10.8, Information Technology (IT) Security, and IRM 10.2, Physical Security Program.

RETENTION AND DISPOSAL:

Records are maintained in accordance with IRM 1.15, Records Management (also see Documents 12829 and 12990).

SYSTEM MANAGER AND ADDRESS:

Division Commissioner, SB/SE. (See the IRS Appendix below for address.)

NOTIFICATION PROCEDURE:

Individuals seeking to determine if this system of records contains a record pertaining to themselves may inquire in accordance with instructions appearing at 31 CFR part 1, subpart C, appendix B. Inquiries should be addressed as in ''Record Access Procedures'' below.

RECORD ACCESS PROCEDURES:

Individuals seeking access to any record contained in this system of

records, or seeking to contest its content, may inquire in accordance with instructions appearing at 31 CFR part 1, subpart C, appendix B. Inquiries should be addressed to the Disclosure Office for Privacy Act requests listed in the IRS Appendix below.

CONTESTING RECORD PROCEDURES:

26 U.S.C. 7852(e) prohibits Privacy Act amendment of tax records.

RECORD SOURCE CATEGORIES:

Tax returns and other filings made by the individual and agency entries made in the administration of the individual's tax account.

EXEMPTIONS CLAIMED FOR THE SYSTEM:

None.

Treasury/IRS 24.047

SYSTEM NAME:

Audit Underreporter Case Files—Treasury/IRS.

SYSTEM LOCATION:

Campus offices. (See the IRS Appendix below for address.)

CATEGORIES OF INDIVIDUALS COVERED BY THE SYSTEM:

Recipients of income (payees) with a discrepancy between the income tax returns they file and information returns filed by payors with respect to them.

CATEGORIES OF RECORDS IN THE SYSTEM:

Payee and payor name, address, Taxpayer Identification Number (TIN) (*e.g.,* Social Security Number (SSN), Employer Identification Number (EIN), or similar number assigned by the IRS), and income records containing the types and amounts of income received/reported.

AUTHORITY FOR MAINTENANCE OF THE SYSTEM:

5 U.S.C. 301 and 26 U.S.C. 7801.

PURPOSE:

To reconcile discrepancies between tax returns and information returns filed.

ROUTINE USES: OF RECORDS MAINTAINED IN THE SYSTEM, INCLUDING CATEGORIES OF USERS AND THE PURPOSE OF SUCH USES:

Disclosure of returns and return information may be made only as provided by 26 U.S.C. 6103. All other records may be used as described below if the IRS deems that the purpose of the disclosure is compatible with the purpose for which IRS collected the records, and no privilege is asserted.

To appropriate agencies, entities, and persons when: (a) The IRS suspects or has confirmed that the security or confidentiality of information in the system of records has been compromised; (b) the IRS has determined that as a result of the suspected or confirmed compromise there is a risk of harm to economic or property interests, identity theft or fraud, or harm to the security or integrity of this system or other systems or programs (whether maintained by the IRS or another agency or entity) that rely upon the compromised information; and (c) the disclosure made to such agencies, entities, and persons is reasonably necessary to assist in connection with IRS efforts to respond to the suspected or confirmed compromise and prevent, minimize, or remedy such harm.

POLICIES AND PRACTICES FOR STORING, RETRIEVING, ACCESSING, RETAINING, AND DISPOSING OF RECORDS IN THE SYSTEM:

STORAGE:

Paper records and electronic media.

RETRIEVABILITY:

Payee's and payor's names and TINs.

SAFEGUARDS:

Access controls are not less than those published in IRM 10.8, Information Technology (IT) Security, and IRM 10.2, Physical Security Program.

RETENTION AND DISPOSAL:

Records are maintained in accordance with IRM 1.15, Records Management (also see Documents 12829 and 12990).

SYSTEM MANAGER AND ADDRESS:

Division Commissioners, W&I and SB/SE. (See the IRS Appendix below for address.)

NOTIFICATION PROCEDURE:

This system may not be accessed for purposes of determining whether the system contains a record pertaining to a particular individual; the records are exempt under 5 U.S.C. 552a(k)(2).

RECORD ACCESS PROCEDURES:

This system may not be accessed for purposes of inspection or in order to contest the content of records; the records are exempt under 5 U.S.C. 552a(k)(2).

CONTESTING RECORD PROCEDURES:

26 U.S.C. 7852(e) prohibits Privacy Act amendment of tax records.

RECORD SOURCE CATEGORIES:

Information returns filed by payors and income tax returns filed by taxpayers.

EXEMPTIONS CLAIMED FOR THE SYSTEM:

This system has been designated exempt from sections (c)(3); (d)(1)–(4); (e)(1); (e)(4)(G)–(I); (e)(5); (e)(8); and (f) of the Privacy Act, pursuant to 5 U.S.C. 552a(k)(2). (See 31 CFR 1.36).

Treasury/IRS 26.001

SYSTEM NAME:

Acquired Property Records—Treasury/IRS.

SYSTEM LOCATION:

Field and campus offices. (See the IRS Appendix below for address.)

CATEGORIES OF INDIVIDUALS COVERED BY THE SYSTEM:

Individuals with delinquent tax accounts whose property has been acquired by the government by purchase or right of redemption.

CATEGORIES OF RECORDS IN THE SYSTEM:

Taxpayer name, address, Taxpayer Identification Number (TIN) (*e.g.,* Social Security Number (SSN), Employer Identification Number (EIN), or similar number assigned by the IRS), and revenue officer reports.

AUTHORITY FOR MAINTENANCE OF THE SYSTEM:

5 U.S.C. 301 and 26 U.S.C. 7801.

PURPOSE:

To track property acquired under 26 U.S.C. 6334.

ROUTINE USES: OF RECORDS MAINTAINED IN THE SYSTEM, INCLUDING CATEGORIES OF USERS AND THE PURPOSES OF SUCH USES:

Disclosure of returns and return information may be made only as provided by 26 U.S.C. 6103. All other records may be used as described below if the IRS deems that the purpose of the disclosure is compatible with the purpose for which IRS collected the records, and no privilege is asserted.

To appropriate agencies, entities, and persons when: (a) The IRS suspects or has confirmed that the security or confidentiality of information in the system of records has been compromised; (b) the IRS has determined that as a result of the suspected or confirmed compromise there is a risk of harm to economic or property interests, identity theft or fraud, or harm to the security or integrity of this system or other systems or programs (whether maintained by the IRS or another agency or entity) that rely upon the compromised information; and (c) the disclosure made to such agencies, entities, and persons is reasonably necessary to assist in connection with IRS efforts to respond to the suspected or confirmed compromise and prevent, minimize, or remedy such harm.

POLICIES AND PRACTICES FOR STORING, RETRIEVING, ACCESSING, RETAINING, AND DISPOSING OF RECORDS IN THE SYSTEM:

STORAGE:

Paper records and electronic media.

RETRIEVABILITY:

By taxpayer name and TIN.

SAFEGUARDS:

Access controls are not less than those published in IRM 10.8, Information Technology (IT) Security, and IRM 10.2, Physical Security Program.

RETENTION AND DISPOSAL:

Records are maintained in accordance with IRM 1.15, Records Management (also see Documents 12829 and 12990).

SYSTEM MANAGER(S) AND ADDRESS:

Division Commissioner, SB/SE. (See the IRS Appendix below for address.)

NOTIFICATION PROCEDURE:

This system may not be accessed for purposes of determining whether the system contains a record pertaining to a particular individual; the records are exempt under 5 U.S.C. 552a(k)(2).

RECORD ACCESS PROCEDURES:

This system may not be accessed for purposes of inspection or in order to contest the content of records; the records are exempt under 5 U.S.C. 552a(k)(2).

CONTESTING RECORD PROCEDURES:

26 U.S.C. 7852(e) prohibits Privacy Act amendment of tax records.

RECORD SOURCE CATEGORIES:

This system of records contains investigatory material compiled for law enforcement purposes whose sources need not be reported.

EXEMPTIONS CLAIMED FOR THE SYSTEM:

This system has been designated exempt from sections (c)(3); (d)(1)–(4); (e)(1); (e)(4)(G)–(I); and (f) of the Privacy Act, pursuant to 5 U.S.C. 552a(k)(2). (See 31 CFR 1.36).

Treasury/IRS 26.006

SYSTEM NAME:

Form 2209, Courtesy Investigations—Treasury/IRS.

SYSTEM LOCATION:

Field and campus offices. (See the IRS Appendix below for address.)

CATEGORIES OF INDIVIDUALS COVERED BY THE SYSTEM:

Individuals on whom a delinquency or other investigation is located in one IRS office, but the individual is now living or has assets located in the jurisdiction of another IRS office.

CATEGORIES OF RECORDS IN THE SYSTEM:

Taxpayer name, address, Taxpayer Identification Number (TIN) (*e.g.,* Social Security Number (SSN), Employer Identification Number (EIN), or similar number assigned by the IRS), asset ownership information, chronological investigative history, and, where applicable, Form SSA–7010 cases (request for preferential investigation on an earning discrepancy case).

AUTHORITY FOR MAINTENANCE OF THE SYSTEM:

5 U.S.C. 301 and 26 U.S.C. 7801.

PURPOSE:

To track the assignment of, and progress of, these investigations.

ROUTINE USES: OF RECORDS MAINTAINED IN THE SYSTEM, INCLUDING CATEGORIES OF USERS AND THE PURPOSES OF SUCH USES:

Disclosure of returns and return information may be made only as provided by 26 U.S.C. 6103. All other records may be used as described below if the IRS deems that the purpose of the disclosure is compatible with the purpose for which IRS collected the records, and no privilege is asserted.

To appropriate agencies, entities, and persons when: (a) The IRS suspects or has confirmed that the security or confidentiality of information in the system of records has been compromised; (b) the IRS has determined that as a result of the suspected or confirmed compromise there is a risk of harm to economic or property interests, identity theft or fraud, or harm to the security or integrity of this system or other systems or programs (whether maintained by the IRS or another agency or entity) that rely upon the compromised information; and (c) the disclosure made to such agencies, entities, and persons is reasonably necessary to assist in connection with IRS efforts to respond to the suspected or confirmed compromise and prevent, minimize, or remedy such harm.

POLICIES AND PRACTICES FOR STORING, RETRIEVING, ACCESSING, RETAINING, AND DISPOSING OF RECORDS IN THE SYSTEM:

STORAGE:

Paper records and electronic media.

RETRIEVABILITY:

By taxpayer name and TIN.

SAFEGUARDS:

Access controls are not less than those published in IRM 10.8, Information Technology (IT) Security, and IRM 10.2, Physical Security Program.

RETENTION AND DISPOSAL:

Records are maintained in accordance with IRM 1.15, Records Management (also see Documents 12829 and 12990).

SYSTEM MANAGER AND ADDRESS:

Division Commissioner, SB/SE. (See the IRS Appendix below for address.)

NOTIFICATION PROCEDURE:

This system may not be accessed for purposes of determining whether the system contains a record pertaining to a particular individual; the records are exempt under 5 U.S.C. 552a(k)(2).

RECORD ACCESS PROCEDURES:

This system may not be accessed for purposes of inspection or in order to contest the content of records; the records are exempt under 5 U.S.C. 552a(k)(2).

CONTESTING RECORD PROCEDURES:

26 U.S.C. 7852(e) prohibits Privacy Act amendment of tax records.

RECORD SOURCE CATEGORIES:

This system of records contains investigatory material compiled for law enforcement purposes whose sources need not be reported.

EXEMPTIONS CLAIMED FOR THE SYSTEM:

This system has been designated exempt from sections (c)(3); (d)(1)–(4); (e)(1); (e)(4)(G)–(I); and (f) of the Privacy Act, pursuant to 5 U.S.C. 552a(k)(2). (See 31 CFR 1.36.)

Treasury/IRS 26.009

SYSTEM NAME:

Lien Files—Treasury/IRS.

SYSTEM LOCATION:

Field and campus offices. (See the IRS Appendix below for address.)

CATEGORIES OF INDIVIDUALS COVERED BY THE SYSTEM:

Individuals on whom Notices of Federal Tax Liens have been filed.

CATEGORIES OF RECORDS IN THE SYSTEM:

Open and closed Federal tax liens, including Certificates of Discharge of Property from Federal Tax Lien; Certificates of Subordination; Certificates of Non-Attachment; Exercise of Government's Right of Redemption of Seized Property; and Releases of Government's Right of Redemption.

AUTHORITY FOR MAINTENANCE OF THE SYSTEM:

5 U.S.C. 301, 26 U.S.C. 6323 and 7801.

PURPOSE:

To identify those individuals on whom a Notice of Federal Tax Lien,

discharge, or subordination on lien attachment has been filed.

ROUTINE USES: OF RECORDS MAINTAINED IN THE SYSTEM, INCLUDING CATEGORIES OF USERS AND THE PURPOSES OF SUCH USES:

Disclosure of returns and return information may be made only as provided by 26 U.S.C. 6103. All other records may be used as described below if the IRS deems that the purpose of the disclosure is compatible with the purpose for which IRS collected the records, and no privilege is asserted.

To appropriate agencies, entities, and persons when: (a) The IRS suspects or has confirmed that the security or confidentiality of information in the system of records has been compromised; (b) the IRS has determined that as a result of the suspected or confirmed compromise there is a risk of harm to economic or property interests, identity theft or fraud, or harm to the security or integrity of this system or other systems or programs (whether maintained by the IRS or another agency or entity) that rely upon the compromised information; and (c) the disclosure made to such agencies, entities, and persons is reasonably necessary to assist in connection with IRS efforts to respond to the suspected or confirmed compromise and prevent, minimize, or remedy such harm.

POLICIES AND PRACTICES FOR STORING, RETRIEVING, ACCESSING, RETAINING, AND DISPOSING OF RECORDS IN THE SYSTEM:

STORAGE:

Paper records and electronic media.

RETRIEVABILITY:

By taxpayer name and Taxpayer Identification Number (TIN) (*e.g.,* Social Security Number (SSN), Employer Identification Number (EIN), or similar number assigned by the IRS).

SAFEGUARDS:

Access controls are not less than those published in IRM 10.8, Information Technology (IT) Security, and IRM 10.2, Physical Security Program.

RETENTION AND DISPOSAL:

Records are maintained in accordance with IRM 1.15, Records Management (also see Documents 12829 and 12990).

SYSTEM MANAGER AND ADDRESS:

Division Commissioner, SB/SE. (See the IRS Appendix below for address.)

NOTIFICATION PROCEDURE:

Individuals seeking to determine if this system of records contains a record pertaining to themselves may inquire in accordance with instructions appearing at 31 CFR part 1, subpart C, appendix B. Inquiries should be addressed as in ''Record Access Procedures'' below.

RECORD ACCESS PROCEDURES:

Individuals seeking access to any record contained in this system of records, or seeking to contest its content, may inquire in accordance with instructions appearing at 31 CFR part 1, subpart C, appendix B. Inquiries should be addressed to the Disclosure Office for Privacy Act requests listed in the IRS Appendix below.

CONTESTING RECORD PROCEDURES:

26 U.S.C. 7852(e) prohibits Privacy Act amendment of tax records.

RECORD SOURCE CATEGORIES:

Tax returns and other filings made by the individual and agency entries made in the administration of the individual's tax account.

EXEMPTIONS CLAIMED FOR THE SYSTEM:

None.

Treasury/IRS 26.012

SYSTEM NAME:

Offer in Compromise (OIC) Files—Treasury/IRS.

SYSTEM LOCATION:

Field, campus and computing center offices. (See the IRS Appendix below for address.)

CATEGORIES OF INDIVIDUALS COVERED BY THE SYSTEM:

Individuals who have submitted an offer to compromise a tax liability.

CATEGORIES OF RECORDS IN THE SYSTEM:

Taxpayer name, address, Taxpayer Identification Number (TIN) (*e.g.,* Social Security Number (SSN), Employer Identification Number (EIN), or similar number assigned by the IRS), assignment information; and records, reports and work papers relating to the assignment, investigation, review and adjudication of the offer.

AUTHORITY FOR MAINTENANCE OF THE SYSTEM:

5 U.S.C. 301 and 26 U.S.C. 7801.

PURPOSE:

To process offers to compromise a tax liability.

ROUTINE USES: OF RECORDS MAINTAINED IN THE SYSTEM, INCLUDING CATEGORIES OF USERS AND THE PURPOSES OF SUCH USES:

Disclosure of returns and return information may be made only as provided by 26 U.S.C. 6103. All other records may be used as described below if the IRS deems that the purpose of the disclosure is compatible with the purpose for which IRS collected the records, and no privilege is asserted.

To appropriate agencies, entities, and persons when: (a) The IRS suspects or has confirmed that the security or confidentiality of information in the system of records has been compromised; (b) the IRS has determined that as a result of the suspected or confirmed compromise there is a risk of harm to economic or property interests, identity theft or fraud, or harm to the security or integrity of this system or other systems or programs (whether maintained by the IRS or another agency or entity) that rely upon the compromised information; and (c) the disclosure made to such agencies, entities, and persons is reasonably necessary to assist in connection with IRS efforts to respond to the suspected or confirmed compromise and prevent, minimize, or remedy such harm.

POLICIES AND PRACTICES FOR STORING, RETRIEVING, ACCESSING, RETAINING, AND DISPOSING OF RECORDS IN THE SYSTEM:

STORAGE:

Paper records and electronic media.

RETRIEVABILITY:

By taxpayer name and TIN.

SAFEGUARDS:

Access controls are not less than those published in IRM 10.8, Information Technology (IT) Security, and IRM 10.2, Physical Security Program.

RETENTION AND DISPOSAL:

Records are maintained in accordance with IRM 1.15, Records Management (also see Documents 12829 and 12990).

SYSTEM MANAGER(S) AND ADDRESS:

Division Commissioner, SB/SE. (See the IRS Appendix below for address.)

NOTIFICATION PROCEDURE:

This system may not be accessed for purposes of determining whether the system contains a record pertaining to a particular individual; the records are exempt under 5 U.S.C. 552a(k)(2).

RECORD ACCESS PROCEDURES:

This system may not be accessed for purposes of inspection or in order to contest the content of records; the records are exempt under 5 U.S.C. 552a(k)(2).

CONTESTING RECORD PROCEDURES:

26 U.S.C. 7852(e) prohibits Privacy Act amendment of tax records.

RECORD SOURCE CATEGORIES:

This system of records contains investigatory material compiled for law enforcement purposes whose sources need not be reported.

EXEMPTIONS CLAIMED FOR THE SYSTEM:

This system is exempt from 5 U.S.C. 552a(c)(3), (d)(1)–(4), (e)(1), (e)(4)(G)–(I) and (f) of the Privacy Act pursuant to 5 U.S.C. 552a(k)(2). (See 31 CFR 1.36.)

Treasury/IRS 26.013

SYSTEM NAME:

Trust Fund Recovery Cases/One Hundred Percent Penalty Cases—Treasury/IRS.

SYSTEM LOCATION:

Field and campus offices. (See the IRS Appendix below for address.)

CATEGORIES OF INDIVIDUALS COVERED BY THE SYSTEM:

Individuals against whom Federal tax assessments have been made or are being considered as a result of their being deemed responsible for payment of unpaid corporation withholding taxes and social security contributions.

CATEGORIES OF RECORDS IN THE SYSTEM:

Taxpayer name, address, Taxpayer Identification Number (TIN) (*e.g.,* Social Security Number (SSN), Employer Identification Number (EIN), or similar number assigned by the IRS), information about basis of assessment, including class of tax, period, dollar figures, waivers extending the period for asserting the penalty (if any), and correspondence.

AUTHORITY FOR MAINTENANCE OF THE SYSTEM:

5 U.S.C. 301 and 26 U.S.C. 7801.

PURPOSE:

To administer and enforce Trust Fund Recovery Penalty cases under 26 U.S.C. 6672.

ROUTINE USES: OF RECORDS MAINTAINED IN THE SYSTEM, INCLUDING CATEGORIES OF USERS AND THE PURPOSES OF SUCH USES:

Disclosure of returns and return information may be made only as provided by 26 U.S.C. 6103. Material covered by rule 6(e) of the Federal Rules of Criminal Procedure may be disclosed only as permitted by that rule. All other records may be used as described below if the IRS deems that the purpose of the disclosure is compatible with the purpose for which IRS collected the records, and no privilege is asserted.

To appropriate agencies, entities, and persons when: (a) The IRS suspects or has confirmed that the security or confidentiality of information in the system of records has been compromised; (b) the IRS has determined that as a result of the suspected or confirmed compromise there is a risk of harm to economic or property interests, identity theft or fraud, or harm to the security or integrity of this system or other systems or programs (whether maintained by the IRS or another agency or entity) that rely upon the compromised information; and (c) the disclosure made to such agencies, entities, and persons is reasonably necessary to assist in connection with IRS efforts to respond to the suspected or confirmed compromise and prevent, minimize, or remedy such harm.

POLICIES AND PRACTICES FOR STORING, RETRIEVING, ACCESSING, RETAINING, AND DISPOSING OF RECORDS IN THE SYSTEM:

STORAGE:

Paper records and electronic media.

RETRIEVABILITY:

By taxpayer name and TIN; cross-referenced to business name from which the penalty arises.

SAFEGUARDS:

Access controls are not less than those published in IRM 10.8, Information Technology (IT) Security, and IRM 10.2, Physical Security Program.

RETENTION AND DISPOSAL:

Records are maintained in accordance with IRM 1.15, Records Management (also see Documents 12829 and 12990).

SYSTEM MANAGER(S) AND ADDRESS:

Division Commissioner, SB/SE. (See the IRS Appendix below for address.)

NOTIFICATION PROCEDURE:

This system may not be accessed for purposes of determining whether the system contains a record pertaining to a particular individual; the records are exempt under 5 U.S.C. 552a(k)(2).

RECORD ACCESS PROCEDURES:

This system may not be accessed for purposes of inspection or in order to contest the content of records; the records are exempt under 5 U.S.C. 552a(k)(2).

CONTESTING RECORD PROCEDURES:

26 U.S.C. 7852(e) prohibits Privacy Act amendment of tax records.

RECORD SOURCE CATEGORIES:

This system of records contains investigatory material compiled for law enforcement purposes whose sources need not be reported.

EXEMPTIONS CLAIMED FOR THE SYSTEM:

This system is exempt from 5 U.S.C. 552a(c)(3), (d)(1)–(4), (e)(1), (e)(4)(G)–(I) and (f) of the Privacy Act pursuant to 5 U.S.C. 552a(k)(2). (See 31 CFR 1.36.)

Treasury/IRS 26.014

SYSTEM NAME:

Record 21, Record of Seizure and Sale of Real Property—Treasury/IRS.

SYSTEM LOCATION:

Field offices. (See the IRS Appendix below for address.)

CATEGORIES OF INDIVIDUALS COVERED BY THE SYSTEM:

Individuals against whom tax assessments have been made and whose real property was seized and sold to satisfy their tax liability. Names and addresses of purchasers of this real property.

CATEGORIES OF RECORDS IN THE SYSTEM:

Taxpayer name, address, Taxpayer Identification Number (TIN) (*e.g.,* Social Security Number (SSN), Employer Identification Number (EIN), or similar number assigned by the IRS), information about basis of assessment, including class of tax, period, dollar amounts, and property description.

AUTHORITY FOR MAINTENANCE OF THE SYSTEM:

5 U.S.C. 301 and 26 U.S.C. 7801.

PURPOSE:

To administer sales of real property.

ROUTINE USES: OF RECORDS MAINTAINED IN THE SYSTEM, INCLUDING CATEGORIES OF USERS AND THE PURPOSES OF SUCH USES:

Disclosure of returns and return information may be made only as provided by 26 U.S.C. 6103. All other records may be used as described below if the IRS deems that the purpose of the disclosure is compatible with the purpose for which IRS collected the records, and no privilege is asserted.

To appropriate agencies, entities, and persons when: (a) The IRS suspects or has confirmed that the security or confidentiality of information in the system of records has been compromised; (b) the IRS has determined that as a result of the suspected or confirmed compromise there is a risk of harm to economic or property interests, identity theft or fraud, or harm to the security or integrity of this system or other systems or programs (whether maintained by the IRS or another agency or entity) that rely upon the compromised information; and (c) the disclosure made to such agencies, entities, and persons is reasonably necessary to assist in connection with IRS efforts to respond to the suspected or confirmed compromise and prevent, minimize, or remedy such harm.

POLICIES AND PRACTICES FOR STORING, RETRIEVING, ACCESSING, RETAINING, AND DISPOSING OF RECORDS IN THE SYSTEM:

STORAGE:

Paper records and electronic records.

RETRIEVABILITY:

By taxpayer name, TIN, and seizure number.

SAFEGUARDS:

Access controls are not less than those published in IRM 10.8, Information Technology (IT) Security, and IRM 10.2, Physical Security Program.

RETENTION AND DISPOSAL:

Records are maintained in accordance with IRM 1.15, Records Management (also see Documents 12829 and 12990).

SYSTEM MANAGER AND ADDRESS:

Division Commissioner, SB/SE. (See the IRS Appendix below for address.)

NOTIFICATION PROCEDURE:

Individuals seeking to determine if this system of records contains a record pertaining to themselves may inquire in accordance with instructions appearing at 31 CFR part 1, subpart C, appendix B. Inquiries should be addressed as in ''Record Access Procedures'' below.

RECORD ACCESS PROCEDURES:

Individuals seeking access to any record contained in this system of records, or seeking to contest its content, may inquire in accordance with instructions appearing at 31 CFR part 1, subpart C, appendix B. Inquiries should be addressed to the Disclosure Office for Privacy Act requests listed in the IRS Appendix below.

CONTESTING RECORD PROCEDURES:

26 U.S.C. 7852(e) prohibits Privacy Act amendment of tax records.

RECORD SOURCE CATEGORIES:

Property records and information supplied by third parties pertaining to property records.

EXEMPTIONS CLAIMED FOR THE SYSTEM:

None.

Treasury/IRS 26.019

SYSTEM NAME:

Taxpayer Delinquent Account (TDA) Files—Treasury/IRS.

SYSTEM LOCATION:

Field and campus offices. (See the IRS Appendix below for address.)

CATEGORIES OF INDIVIDUALS COVERED BY THE SYSTEM:

Individuals on whom Federal tax assessments have been made and persons who owe child support obligations.

CATEGORIES OF RECORDS IN THE SYSTEM:

Investigatory records generated or received in the collection of Federal taxes and all other related sub-files related to the processing of the tax case. This system also includes other management information related to a case and used for tax administration purposes including the Debtor Master File, and records that have a code identifying taxpayers that threatened or assaulted IRS employees.

AUTHORITY FOR MAINTENANCE OF THE SYSTEM:

5 U.S.C. 301 and 26 U.S.C. 7801.

PURPOSE:

To provide inventory control of delinquent accounts.

ROUTINE USES: OF RECORDS MAINTAINED IN THE SYSTEM, INCLUDING CATEGORIES OF USERS AND THE PURPOSES OF SUCH USES:

Disclosure of returns and return information may be made only as provided by 26 U.S.C. 6103. All other records may be used as described below if the IRS deems that the purpose of the disclosure is compatible with the purpose for which IRS collected the records, and no privilege is asserted.

To appropriate agencies, entities, and persons when: (a) The IRS suspects or has confirmed that the security or confidentiality of information in the system of records has been compromised; (b) the IRS has determined that as a result of the suspected or confirmed compromise there is a risk of harm to economic or property interests, identity theft or fraud, or harm to the security or integrity of this system or other systems or programs (whether maintained by the IRS or another agency or entity) that rely upon the compromised information; and (c) the disclosure made to such agencies, entities, and persons is reasonably necessary to assist in connection with IRS efforts to respond to the suspected or confirmed compromise and prevent, minimize, or remedy such harm.

POLICIES AND PRACTICES FOR STORING, RETRIEVING, ACCESSING, RETAINING, AND DISPOSING OF RECORDS IN THE SYSTEM:

STORAGE:

Paper records and electronic media.

RETRIEVABILITY:

By taxpayer name and Taxpayer Identification Number (TIN) (*e.g.,* Social Security Number (SSN), Employer Identification Number (EIN), or similar number assigned by the IRS), or name of person who owes child support obligations.

SAFEGUARDS:

Access controls are not less than those published in IRM 10.8, Information Technology (IT) Security, and IRM 10.2, Physical Security Program.

RETENTION AND DISPOSAL:

Records are maintained in accordance with IRM 1.15, Records Management (also see Documents 12829 and 12990).

SYSTEM MANAGER AND ADDRESS:

Field and campus offices. (See the IRS Appendix below for address.)

NOTIFICATION PROCEDURE:

This system may not be accessed for purposes of determining whether the system contains a record pertaining to a particular individual; the records are exempt under 5 U.S.C. 552a(k)(2).

RECORD ACCESS PROCEDURES:

This system may not be accessed for purposes of inspection or in order to contest the content of records; the records are exempt under 5 U.S.C. 552a(k)(2).

CONTESTING RECORD PROCEDURES:

26 U.S.C. 7852(e) prohibits Privacy Act amendment of tax records.

RECORD SOURCE CATEGORIES:

This system of records contains investigatory material compiled for law enforcement purposes whose sources need not be reported.

EXEMPTIONS CLAIMED FOR THE SYSTEM:

This system has been designated exempt from sections (c)(3), (d)(1)–(4), (e)(1), (e)(4)(G)–(I), and (f) of the Privacy Act, pursuant to 5 U.S.C. 552a(k)(2). (See 31 CFR 1.36.)

Treasury/IRS 26.020

SYSTEM NAME:

Taxpayer Delinquency Investigation (TDI) Files—Treasury/IRS.

SYSTEM LOCATION:

Field and campus offices. (See the IRS Appendix below for address.)

CATEGORIES OF INDIVIDUALS COVERED BY THE SYSTEM:

Individuals who are, or may be, delinquent in filing Federal tax returns.

CATEGORIES OF RECORDS IN THE SYSTEM:

Taxpayer name, Taxpayer Identification Number (TIN) (*e.g.,* Social Security Number (SSN), Employer Identification Number (EIN), or similar number assigned by the IRS); information from previously filed returns, information about the potential delinquent return(s), including class of tax, chronological investigative history;

and a code identifying taxpayers that threatened or assaulted IRS employees.

AUTHORITY FOR MAINTENANCE OF THE SYSTEM:

5 U.S.C. 301 and 26 U.S.C. 7801.

PURPOSE:

To track information on taxpayers who may be delinquent in Federal tax payments or obligations.

ROUTINE USES: OF RECORDS MAINTAINED IN THE SYSTEM, INCLUDING CATEGORIES OF USERS AND THE PURPOSES OF SUCH USES:

Disclosure of returns and return information may be made only as provided by 26 U.S.C. 6103. All other records may be used as described below if the IRS deems that the purpose of the disclosure is compatible with the purpose for which IRS collected the records, and no privilege is asserted.

To appropriate agencies, entities, and persons when: (a) The IRS suspects or has confirmed that the security or confidentiality of information in the system of records has been compromised; (b) the IRS has determined that as a result of the suspected or confirmed compromise there is a risk of harm to economic or property interests, identity theft or fraud, or harm to the security or integrity of this system or other systems or programs (whether maintained by the IRS or another agency or entity) that rely upon the compromised information; and (c) the disclosure made to such agencies, entities, and persons is reasonably necessary to assist in connection with IRS efforts to respond to the suspected or confirmed compromise and prevent, minimize, or remedy such harm.

POLICIES AND PRACTICES FOR STORING, RETRIEVING, ACCESSING, RETAINING, AND DISPOSING OF RECORDS IN THE SYSTEM:

STORAGE:

Paper records and electronic records.

RETRIEVABILITY:

By taxpayer name and TIN.

SAFEGUARDS:

Access controls are not less than those published in IRM 10.8, Information Technology (IT) Security, and IRM 10.2, Physical Security Program.

RETENTION AND DISPOSAL:

Records are maintained in accordance with IRM 1.15, Records Management (also see Documents 12829 and 12990).

SYSTEM MANAGER AND ADDRESS:

Division Commissioner, SB/SE. (See the IRS Appendix below for address.)

NOTIFICATION PROCEDURE:

This system may not be accessed for purposes of determining whether the system contains a record pertaining to a particular individual; the records are exempt under 5 U.S.C. 552a(k)(2).

RECORD ACCESS PROCEDURES:

This system may not be accessed for purposes of inspection or in order to contest the content of records; the records are exempt under 5 U.S.C. 552a(k)(2).

CONTESTING RECORD PROCEDURES:

26 U.S.C. 7852(e) prohibits Privacy Act amendment of tax records.

RECORD SOURCE CATEGORIES:

This system of records contains investigatory material compiled for law enforcement purposes whose sources need not be reported.

EXEMPTIONS CLAIMED FOR THE SYSTEM:

This system has been designated exempt from sections (c)(3), (d)(1)–(4), (e)(1), (e)(4)(G)–(I), and (f) of the Privacy Act, pursuant to 5 U.S.C. 552a(k)(2). (See 31 CFR 1.36.)

Treasury/IRS 26.021

SYSTEM NAME:

Transferee Files—Treasury/IRS.

SYSTEM LOCATION:

Field and campus offices. (See the IRS Appendix below for address.)

CATEGORIES OF INDIVIDUALS COVERED BY THE SYSTEM:

Individuals on whom tax assessments have been made but who have, or may have, transferred their assets in order to place them beyond the reach of the government.

CATEGORIES OF RECORDS IN THE SYSTEM:

Taxpayer name, address, Taxpayer Identification Number (TIN) (*e.g.,* Social Security Number (SSN), Employer Identification Number (EIN), or similar number assigned by the IRS), assessment, including class of tax, period, dollar amounts and information about the transferee.

AUTHORITY FOR MAINTENANCE OF THE SYSTEM:

5 U.S.C. 301 and 26 U.S.C. 7801.

PURPOSE:

To provide inventory control on taxpayers believed to have transferred assets that may not be available to satisfy their delinquent tax accounts.

ROUTINE USES: OF RECORDS MAINTAINED IN THE SYSTEM, INCLUDING CATEGORIES OF USERS AND THE PURPOSES OF SUCH USES:

Disclosure of returns and return information may be made only as provided by 26 U.S.C. 6103. All other records may be used as described below if the IRS deems that the purpose of the disclosure is compatible with the purpose for which IRS collected the records, and no privilege is asserted.

To appropriate agencies, entities, and persons when: (a) The IRS suspects or has confirmed that the security or confidentiality of information in the system of records has been compromised; (b) the IRS has determined that as a result of the suspected or confirmed compromise there is a risk of harm to economic or property interests, identity theft or fraud, or harm to the security or integrity of this system or other systems or programs (whether maintained by the IRS or another agency or entity) that rely upon the compromised information; and (c) the disclosure made to such agencies, entities, and persons is reasonably necessary to assist in connection with IRS efforts to respond to the suspected or confirmed compromise and prevent, minimize, or remedy such harm.

POLICIES AND PRACTICES FOR STORING, RETRIEVING, ACCESSING, RETAINING, AND DISPOSING OF RECORDS IN THE SYSTEM:

STORAGE:

Paper records and electronic media.

RETRIEVABILITY:

By taxpayer name and TIN.

SAFEGUARDS:

Access controls are not less than those published in IRM 10.8, Information Technology (IT) Security, and IRM 10.2, Physical Security Program.

RETENTION AND DISPOSAL:

Records are maintained in accordance with IRM 1.15, Records Management (also see Documents 12829 and 12990).

SYSTEM MANAGER AND ADDRESS:

Division Commissioner, SB/SE. (See the IRS Appendix below for address.)

NOTIFICATION PROCEDURE:

This system may not be accessed for purposes of determining whether the system contains a record pertaining to a particular individual; the records are exempt under 5 U.S.C. 552a(k)(2).

RECORD ACCESS PROCEDURES:

This system may not be accessed for purposes of inspection or in order to contest the content of records; the records are exempt under 5 U.S.C. 552a(k)(2).

CONTESTING RECORD PROCEDURES:

26 U.S.C. 7852(e) prohibits Privacy Act amendment of tax records. Other records are exempt from contest as stated in RECORD ACCESS PROCEDURES, above.

RECORD SOURCE CATEGORIES:

This system of records contains investigatory material compiled for Law enforcement purposes whose sources need not be reported.

EXEMPTIONS CLAIMED FOR THE SYSTEM:

This system has been designated exempt from sections (c)(3), (d)(1)–(4), (e)(1), (e)(4)(G)–(I), and (f) of the Privacy Act, pursuant to 5 U.S.C. 552a(k)(2). (See 31 CFR 1.36).

Treasury/IRS 30.003

SYSTEM NAME:

Requests for Printed Tax Materials Including Lists—Treasury/IRS.

SYSTEM LOCATION:

Field and campus offices. See the IRS Appendix below for addresses.

CATEGORIES OF INDIVIDUALS COVERED BY THE SYSTEM:

Individuals that request various IRS printed and electronic materials.

CATEGORIES OF RECORDS IN THE SYSTEM:

Name and address of individuals wanting to receive tax forms, newsletters, publications or educational products.

AUTHORITY FOR MAINTENANCE OF THE SYSTEM:

5 U.S.C. 301.

PURPOSE:

The purpose of this system is to administer tracking and responses to requests for printed tax materials.

ROUTINE USES: OF RECORDS MAINTAINED IN THE SYSTEM, INCLUDING CATEGORIES OF USERS AND THE PURPOSES OF SUCH USES:

Records may be used as described below if the IRS deems that the purpose of the disclosure is compatible with the purpose for which IRS collected the records, and no privilege is asserted.

(1) Disclose information to mailing or distribution services contractors for the purpose of executing mail outs, order fulfillment, or subscription fulfillment.

(2) Disclose information to mailing or distribution services contractors for the purpose of maintaining mailing lists.

(3) To appropriate agencies, entities, and persons when: (a) The IRS suspects or has confirmed that the security or confidentiality of information in the system of records has been compromised; (b) the IRS has determined that as a result of the suspected or confirmed compromise there is a risk of harm to economic or property interests, identity theft or fraud, or harm to the security or integrity of this system or other systems or programs (whether maintained by the IRS or another agency or entity) that rely upon the compromised information; and (c) the disclosure made to such agencies, entities, and persons is reasonably necessary to assist in connection with IRS efforts to respond to the suspected or confirmed compromise and prevent, minimize, or remedy such harm.

POLICIES AND PRACTICES FOR STORING, RETRIEVING, ACCESSING, RETAINING, AND DISPOSING OF RECORDS IN THE SYSTEM:

STORAGE:

Paper records and electronic media.

RETRIEVABILITY:

Alphabetically by name or numerically by zip code.

SAFEGUARDS:

Access controls are not less than those published in IRM 10.8, Information Technology (IT) Security, and IRM 10.2, Physical Security Program.

RETENTION AND DISPOSAL:

Records are maintained in accordance with IRM 1.15, Records Management (also see Documents 12829 and 12990).

SYSTEM MANAGER AND ADDRESS:

Chief, Agency Wide Shared Services (Publishing Services). (See the IRS Appendix below for address.)

NOTIFICATION PROCEDURE:

Individuals seeking to determine if this system of records contains a record pertaining to themselves may inquire in accordance with instructions appearing at 31 CFR part 1, subpart C, appendix B. Inquiries should be addressed as in ''Record Access Procedures'' below.

RECORD ACCESS PROCEDURES:

Individuals seeking access to any record contained in this system of records, or seeking to contest its content, may inquire in accordance with instructions appearing at 31 CFR part 1, subpart C, appendix B. Inquiries should be addressed to the Disclosure Office for Privacy Act requests listed in the IRS Appendix below.

CONTESTING RECORD PROCEDURES:

See ''Record Access Procedures'' above.

RECORD SOURCE CATEGORIES:

The information is supplied by the individual making the request and agency entries made in fulfilling the request.

EXEMPTIONS CLAIMED FOR THE SYSTEM:

None.

Treasury/IRS 30.004

SYSTEM NAME:

Security Violations—Treasury/IRS.

SYSTEM LOCATION:

National Office, field and campus offices. (See the IRS Appendix below for address.)

CATEGORIES OF INDIVIDUALS COVERED BY THE SYSTEM:

Individuals who violate physical security regulations.

CATEGORIES OF RECORDS IN THE SYSTEM:

Name of violator, circumstances of violation (*e.g.,* date, time, actions of violator, etc.), supervisory action taken, and other information pertaining to the violation.

AUTHORITY FOR MAINTENANCE OF THE SYSTEM:

5 U.S.C. 301.

PURPOSE:

The purpose of this system is to administer programs to track and take appropriate action for security violations.

ROUTINE USES: OF RECORDS MAINTAINED IN THE SYSTEM, INCLUDING CATEGORIES OF USERS AND THE PURPOSES OF SUCH USES:

Records may be used as described below if the IRS deems that the purpose of the disclosure is compatible with the purpose for which IRS collected the records, and no privilege is asserted.

(1) Disclose information to the Department of Justice (DOJ) when seeking legal advice or for use in any proceeding, or in preparation for any proceeding, when: (a) The IRS or any component thereof; (b) any IRS employee in his or her official capacity; (c) any IRS employee in his or her individual capacity if the IRS or DOJ has agreed to provide representation for the employee; or (d) the United States is a party to, has an interest in, or is likely to be affected by, the proceeding and the IRS determines that the records are relevant and necessary to the proceeding or advice sought.

(2) Disclose information in a proceeding (including discovery) before a court, administrative tribunal, or other adjudicative body when: (a) The IRS or any component thereof; (b) any IRS employee in his or her official capacity; (c) any IRS employee in his or her personal capacity if the IRS or the DOJ has agreed to provide representation for the employee; or (d) the United States is a part to, has an interest in, or is likely to be affected by, the proceeding, and the IRS or the DOJ determines that the information is relevant and necessary. Information may be disclosed to the adjudicative body to resolve issues of relevancy, necessity, or privilege pertaining to the information.

(3) To appropriate agencies, entities, and persons when: (a) The IRS suspects

or has confirmed that the security or confidentiality of information in the system of records has been compromised; (b) the IRS has determined that as a result of the suspected or confirmed compromise there is a risk of harm to economic or property interests, identity theft or fraud, or harm to the security or integrity of this system or other systems or programs (whether maintained by the IRS or another agency or entity) that rely upon the compromised information; and (c) the disclosure made to such agencies, entities, and persons is reasonably necessary to assist in connection with IRS efforts to respond to the suspected or confirmed compromise and prevent, minimize, or remedy such harm.

POLICIES AND PRACTICES FOR STORING, RETRIEVING, ACCESSING, RETAINING, AND DISPOSING OF RECORDS IN THE SYSTEM:

STORAGE:

Paper records and electronic media.

RETRIEVABILITY:

By name.

SAFEGUARDS:

Access controls are not less than those published in IRM 10.8, Information Technology (IT) Security, and IRM 10.2, Physical Security Program.

RETENTION AND DISPOSAL:

Records are maintained in accordance with IRM 1.15, Records Management (also see Documents 12829 and 12990).

SYSTEM MANAGER(S) AND ADDRESS:

Chief, Agency Wide Shared Services (Property, Security, and Records). (See the IRS Appendix below for address.)

NOTIFICATION PROCEDURE:

Individuals seeking to determine if this system of records contains a record pertaining to themselves may inquire in accordance with instructions appearing at 31 CFR part 1, subpart C, appendix B. Inquiries should be addressed as in ''Record Access Procedures'' below.

RECORD ACCESS PROCEDURES:

Individuals seeking access to any record contained in this system of records, or seeking to contest its content, may inquire in accordance with instructions appearing at 31 CFR part 1, subpart C, appendix B. Inquiries should be addressed to the Disclosure Office for Privacy Act requests listed in the IRS Appendix below.

CONTESTING RECORD PROCEDURES:

See ''Record Access Procedures'' above.

RECORD SOURCE CATEGORIES:

Contract guard force and security inspections.

EXEMPTIONS CLAIMED FOR THE SYSTEM:

None.

Treasury/IRS 34.003

SYSTEM NAME:

Assignment and Accountability of Personal Property Files—Treasury/IRS.

SYSTEM LOCATION:

National Office, field, computing center, and campus offices. (See the IRS Appendix below for address.)

CATEGORIES OF INDIVIDUALS COVERED BY THE SYSTEM:

Individuals receiving government property for use and repair.

CATEGORIES OF RECORDS IN THE SYSTEM:

Descriptions of property, receipts, reasons for removal, and property passes.

AUTHORITY FOR MAINTENANCE OF THE SYSTEM:

5 U.S.C. 301.

PURPOSE:

To maintain an inventory control over government property assigned to IRS employees for their use and to account for government property requiring repair.

ROUTINE USES: OF RECORDS MAINTAINED IN THE SYSTEM, INCLUDING CATEGORIES OF USERS AND THE PURPOSES OF SUCH USES:

Records may be used as described below if the IRS deems that the purpose of the disclosure is compatible with the purpose for which IRS collected the records, and no privilege is asserted.

(1) Disclose information to the Department of Justice (DOJ) when seeking legal advice or for use in any proceeding, or in preparation for any proceeding, when: (a) The IRS or any component thereof; (b) any IRS employee in his or her official capacity; (c) any IRS employee in his or her individual capacity if the IRS or DOJ has agreed to provide representation for the employee; or (d) the United States is a party to, has an interest in, or is likely to be affected by, the proceeding and the IRS determines that the records are relevant and necessary to the proceeding or advice sought.

(2) Disclose information in a proceeding (including discovery) before a court, administrative tribunal, or other adjudicative body when: (a) The IRS or any component thereof; (b) any IRS employee in his or her official capacity; (c) any IRS employee in his or her personal capacity if the IRS or DOJ has agreed to provide representation for the employee; or (d) the United States is a party to, has an interest in, or is likely to be affected by, the proceeding and the IRS or DOJ determines that the information is relevant and necessary to the proceeding. Information may be disclosed to the adjudicative body to resolve issues of relevancy, necessity, or privilege pertaining to the information.

(3) Disclose information to an appropriate Federal, state, local, tribal, or foreign agency, or other public authority, responsible for implementing or enforcing, or for investigating or prosecuting the violation of, a statute, rule, regulation, order, or license, when a record on its face, or in conjunction with other records, indicates a potential violation of law or regulation and the information disclosed is relevant to any regulatory, enforcement, investigative, or prosecutorial responsibility of the receiving authority.

(4) Disclose information to third parties during the course of an investigation to the extent necessary to obtain information pertinent to the investigation.

(5) To appropriate agencies, entities, and persons when: (a) The IRS suspects or has confirmed that the security or confidentiality of information in the system of records has been compromised; (b) the IRS has determined that as a result of the suspected or confirmed compromise there is a risk of harm to economic or property interests, identity theft or fraud, or harm to the security or integrity of this system or other systems or programs (whether maintained by the IRS or another agency or entity) that rely upon the compromised information; and (c) the disclosure made to such agencies, entities, and persons is reasonably necessary to assist in connection with IRS efforts to respond to the suspected or confirmed compromise and prevent, minimize, or remedy such harm.

POLICIES AND PRACTICES FOR STORING, RETRIEVING, ACCESSING, RETAINING, AND DISPOSING OF RECORDS IN THE SYSTEM:

STORAGE:

Paper records and electronic media.

RETRIEVABILITY:

By employee name.

SAFEGUARDS:

Access controls are not less than those published in IRM 10.8, Information Technology (IT) Security, and IRM 10.2, Physical Security Program.

RETENTION AND DISPOSAL:

Records are maintained in accordance with IRM 1.15, Records Management (also see Documents 12829 and 12990).

SYSTEM MANAGER AND ADDRESS:

Chief, Agency Wide Shared Services (Space and Property). (See the IRS Appendix below for address.)

NOTIFICATION PROCEDURE:

Individuals seeking to determine if this system of records contains a record pertaining to themselves may inquire in accordance with instructions appearing at 31 CFR part 1, subpart C, appendix B. Inquiries should be addressed as in ''Record Access Procedures'' below.

RECORD ACCESS PROCEDURES:

Individuals seeking access to any record contained in this system of records, or seeking to contest its content, may inquire in accordance with instructions appearing at 31 CFR part 1, subpart C, appendix B. Inquiries should be addressed to the Disclosure Office for Privacy Act requests listed in the IRS Appendix below.

CONTESTING RECORD PROCEDURES:

See ''Record Access Procedures'' above.

RECORD SOURCE CATEGORIES:

Individuals who receive government property; request property passes; or who request repairs on equipment.

EXEMPTIONS CLAIMED FOR THE SYSTEM:

None.

Treasury/IRS 34.009

SYSTEM NAME:

Safety Program Files—Treasury/IRS.

SYSTEM LOCATION:

National Office, field, computing center, and campus offices. (See the IRS Appendix below for address.)

PURPOSE:

To administer safety programs.

CATEGORIES OF INDIVIDUALS COVERED BY THE SYSTEM:

Employees and other individuals involved in IRS motor vehicle accidents, accidents, or injuries, on IRS property, or who have brought tort or personal property claims against the Service; individuals issued IRS driver's licenses.

CATEGORIES OF RECORDS IN THE SYSTEM:

Individual driving records and license applications, motor vehicle accident reports, lost time and no-lost time personal injury reports, tort and personal property claims case files, informal and formal investigative report files. Injury information is contained in the Safety and Health Information System (SHIMS), which is part of the records of Treasury .011—Treasury Safety Incident Management Information System (70 **Federal Register** 44177–44197 (August 1, 2005)).

AUTHORITY FOR MAINTENANCE OF THE SYSTEM:

5 U.S.C. 301 and Executive Order 12196.

PURPOSE:

To administer the agency's health and safety program.

ROUTINE USES: OF RECORDS MAINTAINED IN THE SYSTEM, INCLUDING CATEGORIES OF USERS AND THE PURPOSES OF SUCH USES:

Disclosure of returns and return information may be made only as provided by 26 U.S.C. 6103. All other records may be used as described below if the IRS deems that the purpose of the disclosure is compatible with the purpose for which IRS collected the records, and no privilege is asserted.

(1) Disclose information to the Department of Justice (DOJ) when seeking legal advice or for use in any proceeding, or in preparation for any proceeding, when: (a) The IRS or any component thereof; (b) any IRS employee in his or her official capacity; (c) any IRS employee in his or her individual capacity if the IRS or DOJ has agreed to provide representation for the employee; or (d) the United States is a party to, has an interest in, or is likely to be affected by, the proceeding and the IRS determines that the records are relevant and necessary to the proceeding or advice sought.

(2) Disclose information in a proceeding (including discovery) before a court, administrative tribunal, or other adjudicative body when: (a) The IRS or any component thereof: (b) any IRS employee in his or her official capacity; (c) any IRS employee in his or her personal capacity if the IRS or the DOJ has agreed to provide representation for the employee; or (d) the United States is a part to, has an interest in, or is likely to be affected by, the proceeding, and the IRS or the DOJ determines that the information is relevant and necessary. Information may be disclosed to the adjudicative body to resolve issues of relevancy, necessity, or privilege pertaining to the information.

(3) Disclose information to an appropriate Federal, state, local, tribal, or foreign agency, or other public authority, responsible for implementing or enforcing, or for investigating or prosecuting the violation of, a statute, rule, regulation, order, or license, when a record on its face, or in conjunction with other records, indicates a potential violation of law or regulation and the information disclosed is relevant to any regulatory, enforcement, investigative, or prosecutorial responsibility of the receiving authority.

(4) Disclose information to third parties during the course of an investigation to the extent necessary to obtain information pertinent to the investigation.

(5) Disclose information to officials of labor organizations recognized under 5 U.S.C. Chapter 71 when relevant and necessary to their duties of exclusive representation.

(6) Provide information to the Department of Labor in connection with investigations of accidents occurring in the work place.

(7) Provide information to other federal agencies for the purpose of effecting inter-agency salary offset or interagency administrative offset.

(8) To appropriate agencies, entities, and persons when: (a) The IRS suspects or has confirmed that the security or confidentiality of information in the system of records has been compromised; (b) the IRS has determined that as a result of the suspected or confirmed compromise there is a risk of harm to economic or property interests, identity theft or fraud, or harm to the security or integrity of this system or other systems or programs (whether maintained by the IRS or another agency or entity) that rely upon the compromised information; and (c) the disclosure made to such agencies, entities, and persons is reasonably necessary to assist in connection with IRS efforts to respond to the suspected or confirmed compromise and prevent, minimize, or remedy such harm.

POLICIES AND PRACTICES FOR STORING, RETRIEVING, ACCESSING, RETAINING, AND DISPOSING OF RECORDS IN THE SYSTEM:

STORAGE:

Paper records and electronic media.

RETRIEVABILITY:

By employee or other individual's name.

SAFEGUARDS:

Access controls are not less than those published in IRM 10.8, Information Technology (IT) Security, and IRM 10.2, Physical Security Program.

RETENTION AND DISPOSAL:

Records are maintained in accordance with IRM 1.15, Records Management (also see Documents 12829 and 12990).

SYSTEM MANAGER AND ADDRESS:

Chief, Agency Wide Shared Services. (See the IRS Appendix below for address.)

NOTIFICATION PROCEDURE:

Individuals seeking to determine if this system of records contains a record

pertaining to themselves may inquire in accordance with instructions appearing at 31 CFR part 1, subpart C, appendix B. Inquiries should be addressed as in ''Record Access Procedures'' below.

RECORD ACCESS PROCEDURES:

Individuals seeking access to any record contained in this system of records, or seeking to contest its content, may inquire in accordance with instructions appearing at 31 CFR part 1, subpart C, appendix B. Inquiries should be addressed to the Disclosure Office for Privacy Act requests listed in the IRS Appendix below.

CONTESTING RECORD PROCEDURES:

26 U.S.C. 7852(e) prohibits Privacy Act amendment of tax records. Individuals seeking access to any non-tax record contained in this system of records, or seeking to contest its content, may inquire in accordance with instructions appearing at 31 CFR part 1, subpart C, appendix B. Inquiries should be addressed to the Disclosure Office for Privacy Act requests listed in the IRS Appendix below.

RECORD SOURCE CATEGORIES:

IRS employees, and other claimants and third party witnesses.

EXEMPTIONS CLAIMED FOR THE SYSTEM:

None.

Treasury/IRS 34.012

SYSTEM NAME:

Emergency Preparedness Cadre Assignments and Alerting Rosters Files—Treasury/IRS.

SYSTEM LOCATION:

National Office, field, computing center, and campus offices. (See the IRS Appendix below for address.)

CATEGORIES OF INDIVIDUALS COVERED BY THE SYSTEM:

Employees who have been identified as emergency preparedness points of contact.

CATEGORIES OF RECORDS IN THE SYSTEM:

Cadre assignments: Personal information on employees; *e.g.,* name, address, phone number, family data, security clearance, relocation assignment, etc. Alerting rosters: Current listing of individuals by name and title, stating their addresses (work, home, and email), and phone numbers.

AUTHORITY FOR MAINTENANCE OF THE SYSTEM:

5 U.S.C. 301.

PURPOSE:

To identify emergency preparedness team members and their responsibilities; and to provide a means of contacting cadre members in the event of any emergency.

ROUTINE USES: OF RECORDS MAINTAINED IN THE SYSTEM, INCLUDING CATEGORIES OF USERS AND THE PURPOSES OF SUCH USES:

Records may be used as described below if the IRS deems that the purpose of the disclosure is compatible with the purpose for which IRS collected the records, and no privilege is asserted.

(1) Disclose information to the Department of Justice (DOJ) when seeking legal advice or for use in any proceeding, or in preparation for any proceeding, when: (a) The IRS or any component thereof; (b) any IRS employee in his or her official capacity; (c) any IRS employee in his or her individual capacity if the IRS or DOJ has agreed to provide representation for the employee; or (d) the United States is a party to, has an interest in, or is likely to be affected by, the proceeding and the IRS determines that the records are relevant and necessary to the proceeding or advice sought.

(2) Disclose information in a proceeding (including discovery) before a court, administrative tribunal, or other adjudicative body when: (a) The IRS or any component thereof: (b) any IRS employee in his or her official capacity; (c) any IRS employee in his or her personal capacity if the IRS or the DOJ has agreed to provide representation for the employee; or (d) the United States is a part to, has an interest in, or is likely to be affected by, the proceeding, and the IRS or the DOJ determines that the information is relevant and necessary. Information may be disclosed to the adjudicative body to resolve issues of relevancy, necessity, or privilege pertaining to the information.

(3) To appropriate agencies, entities, and persons when: (a) The IRS suspects or has confirmed that the security or confidentiality of information in the system of records has been compromised; (b) the IRS has determined that as a result of the suspected or confirmed compromise there is a risk of harm to economic or property interests, identity theft or fraud, or harm to the security or integrity of this system or other systems or programs (whether maintained by the IRS or another agency or entity) that rely upon the compromised information; and (c) the disclosure made to such agencies, entities, and persons is reasonably necessary to assist in connection with IRS efforts to respond to the suspected or confirmed compromise and prevent, minimize, or remedy such harm.

POLICIES AND PRACTICES FOR STORING, RETRIEVING, ACCESSING, RETAINING, AND DISPOSING OF RECORDS IN THE SYSTEM:

STORAGE:

Paper records and electronic media.

RETRIEVABILITY:

By employee name.

SAFEGUARDS:

Access controls are not less than those published in IRM 10.8, Information Technology (IT) Security, and IRM 10.2, Physical Security Program.

RETENTION AND DISPOSAL:

Records are maintained in accordance with IRM 1.15, Records Management (also see Documents 12820 and 12990).

SYSTEM MANAGER AND ADDRESS:

Director, Facilities Management and Security Services. (See the IRS Appendix below for address.)

NOTIFICATION PROCEDURE:

Individuals seeking to determine if this system of records contains a record pertaining to themselves may inquire in accordance with instructions appearing at 31 CFR part 1, subpart C, appendix B. Inquiries should be addressed as in ''Record Access Procedures'' below.

RECORD ACCESS PROCEDURES:

Individuals seeking access to any record contained in this system of records, or seeking to contest its content, may inquire in accordance with instructions appearing at 31 CFR part 1, subpart C, appendix B. Inquiries should be addressed to the Disclosure Office for Privacy Act requests listed in the IRS Appendix below.

CONTESTING RECORD PROCEDURES:

See ''Record Access Procedures'' above.

RECORD SOURCE CATEGORIES:

Cadre members.

EXEMPTIONS CLAIMED FOR THE SYSTEM:

None.

Treasury/IRS 34.013

SYSTEM NAME:

Identification Media Files System for Employees and Others Issued IRS Identification—Treasury/IRS.

SYSTEM LOCATION:

National Office, field, computing center, and campus offices. (See the IRS Appendix below for address.)

CATEGORIES OF INDIVIDUALS COVERED BY THE SYSTEM:

Employees and contractors having one or more items of identification.

Federal and non-federal personnel working in or visiting IRS facilities.

CATEGORIES OF RECORDS IN THE SYSTEM:

Name, home address, and other personal information and reports on loss, theft, or destruction of pocket commissions, enforcement badges and other forms of identification.

AUTHORITY FOR MAINTENANCE OF THE SYSTEM:

5 U.S.C. 301.

PURPOSE:

To track the issuance and loss of identification media used to authenticate IRS employees and to plan for efficient allocation and utilization of space based upon records showing use of IRS facilities.

ROUTINE USES: OF RECORDS MAINTAINED IN THE SYSTEM, INCLUDING CATEGORIES OF USERS AND THE PURPOSES OF SUCH USES:

Records may be used as described below if the IRS deems that the purpose of the disclosure is compatible with the purpose for which IRS collected the records, and no privilege is asserted.

(1) Disclose information to the Department of Justice (DOJ) when seeking legal advice or for use in any proceeding, or in preparation for any proceeding, when: (a) The IRS or any component thereof; (b) any IRS employee in his or her official capacity; (c) any IRS employee in his or her individual capacity if the IRS or DOJ has agreed to provide representation for the employee; or (d) the United States is a party to, has an interest in, or is likely to be affected by, the proceeding and the IRS determines that the records are relevant and necessary to the proceeding or advice sought.

(2) Disclose information in a proceeding (including discovery) before a court, administrative tribunal, or other adjudicative body when: (a) The IRS or any component thereof: (b) any IRS employee in his or her official capacity; (c) any IRS employee in his or her personal capacity if the IRS or the DOJ has agreed to provide representation for the employee; or (d) the United States is a part to, has an interest in, or is likely to be affected by, the proceeding, and the IRS or the DOJ determines that the information is relevant and necessary. Information may be disclosed to the adjudicative body to resolve issues of relevancy, necessity, or privilege pertaining to the information.

(3) To appropriate agencies, entities, and persons when: (a) The IRS suspects or has confirmed that the security or confidentiality of information in the system of records has been compromised; (b) the IRS has determined that as a result of the suspected or confirmed compromise there is a risk of harm to economic or property interests, identity theft or fraud, or harm to the security or integrity of this system or other systems or programs (whether maintained by the IRS or another agency or entity) that rely upon the compromised information; and (c) the disclosure made to such agencies, entities, and persons is reasonably necessary to assist in connection with IRS efforts to respond to the suspected or confirmed compromise and prevent, minimize, or remedy such harm.

POLICIES AND PRACTICES FOR STORING, RETRIEVING, ACCESSING, RETAINING, AND DISPOSING OF RECORDS IN THE SYSTEM:

STORAGE:

Paper records and electronic media.

RETRIEVABILITY:

By employee, contractor, or visitor's name and identification media serial number.

SAFEGUARDS:

Access controls are not less than those published in IRM 10.8, Information Technology (IT) Security, and IRM 10.2, Physical Security Program.

RETENTION AND DISPOSAL:

Records are maintained in accordance with IRM 1.15, Records Management (also see Documents 12829 and 12990).

SYSTEM MANAGER AND ADDRESS:

Director, Facilities Management and Security Services. See IRS Appendix below for address.

NOTIFICATION PROCEDURE:

Individuals seeking to determine if this system of records contains a record pertaining to themselves may inquire in accordance with instructions appearing at 31 CFR part 1, subpart C, appendix B. Inquiries should be addressed as in ''Record Access Procedures'' below.

RECORD ACCESS PROCEDURES:

Individuals seeking access to any record contained in this system of records, or seeking to contest its content, may inquire in accordance with instructions appearing at 31 CFR part 1, subpart C, appendix B. Inquiries should be addressed to the Disclosure Office for Privacy Act requests listed in the IRS Appendix below.

CONTESTING RECORD PROCEDURES:

See ''Record Access Procedures'' above.

RECORD SOURCE CATEGORIES:

Document 882, New Identification Badge Request; Form 11646, Proximity Card Badge Application; Form 12598, Lost Badge Record; Form 4589, Lost or Forgotten Badge Record; Form 9516, Visitor Badge.

EXEMPTIONS CLAIMED FOR THE SYSTEM:

None.

Treasury/IRS 34.014

SYSTEM NAME:

Motor Vehicle Registration and Entry Pass Files—Treasury/IRS.

SYSTEM LOCATION:

National Office, field, computing center, and campus offices. (See the IRS Appendix below for address.)

CATEGORIES OF INDIVIDUALS COVERED BY THE SYSTEM:

Individuals who are issued parking permits because they require continued access to IRS facilities; and parking area violators.

CATEGORIES OF RECORDS IN THE SYSTEM:

Name of employee, registered owner of vehicle, office branch, telephone number, description of car, license number, employee's signature, name and expiration date of insurance, decal number; parking violations.

AUTHORITY FOR MAINTENANCE OF THE SYSTEM:

5 U.S.C. 301.

PURPOSE:

To track individuals to whom parking permits are issued and to whom parking violations are issued.

ROUTINE USES: OF RECORDS MAINTAINED IN THE SYSTEM, INCLUDING CATEGORIES OF USERS AND THE PURPOSES OF SUCH USES:

Records may be used as described below if the IRS deems that the purpose of the disclosure is compatible with the purpose for which IRS collected the records, and no privilege is asserted.

(1) Disclose information to the Department of Justice (DOJ) when seeking legal advice or for use in any proceeding, or in preparation for any proceeding, when: (a) The IRS or any component thereof; (b) any IRS employee in his or her official capacity; (c) any IRS employee in his or her individual capacity if the IRS or DOJ has agreed to provide representation for the employee; or (d) the United States is a party to, has an interest in, or is likely to be affected by, the proceeding and the IRS determines that the records are relevant and necessary to the proceeding or advice sought.

(2) Disclose information in a proceeding (including discovery) before a court, administrative tribunal, or other adjudicative body when: (a) The IRS or any component thereof: (b) any IRS

employee in his or her official capacity; (c) any IRS employee in his or her personal capacity if the IRS or the DOJ has agreed to provide representation for the employee; or (d) the United States is a part to, has an interest in, or is likely to be affected by, the proceeding, and the IRS or the DOJ determines that the information is relevant and necessary. Information may be disclosed to the adjudicative body to resolve issues of relevancy, necessity, or privilege pertaining to the information.

(3) To appropriate agencies, entities, and persons when: (a) The IRS suspects or has confirmed that the security or confidentiality of information in the system of records has been compromised; (b) the IRS has determined that as a result of the suspected or confirmed compromise there is a risk of harm to economic or property interests, identity theft or fraud, or harm to the security or integrity of this system or other systems or programs (whether maintained by the IRS or another agency or entity) that rely upon the compromised information; and (c) the disclosure made to such agencies, entities, and persons is reasonably necessary to assist in connection with IRS efforts to respond to the suspected or confirmed compromise and prevent, minimize, or remedy such harm.

POLICIES AND PRACTICES FOR STORING, RETRIEVING, ACCESSING, RETAINING,AND DISPOSING OF RECORDS IN THE SYSTEM:

STORAGE:

Paper records and electronic media.

RETRIEVABILITY:

By employee or other individual's name.

SAFEGUARDS:

Access controls are not less than those published in IRM 10.8, Information Technology (IT) Security, and IRM 10.2, Physical Security Program.

RETENTION AND DISPOSAL:

Records are maintained in accordance with IRM 1.15, Records Management (also see Documents 12829 and 12990).

SYSTEM MANAGER AND ADDRESS:

Director, Facilities Management and Security Services. (See the IRS Appendix below for address.)

NOTIFICATION PROCEDURE:

Individuals seeking to determine if this system of records contains a record pertaining to themselves may inquire in accordance with instructions appearing at 31 CFR part 1, subpart C, appendix B. Inquiries should be addressed as in ''Record Access Procedures'' below.

RECORD ACCESS PROCEDURES:

Individuals seeking access to any record contained in this system of records, or seeking to contest its content, may inquire in accordance with instructions appearing at 31 CFR part 1, subpart C, appendix B. Inquiries should be addressed to the Disclosure Office for Privacy Act requests listed in the IRS Appendix below. The IRS may assert 5 U.S.C. 552a (d)(5) as appropriate.

CONTESTING RECORD PROCEDURES:

See ''Record Access Procedures'' above.

RECORD SOURCE CATEGORIES:

Parking permits: Employees and other individuals to whom they are issued. Parking violations: Security guard personnel who issue the tickets.

EXEMPTIONS CLAIMED FOR THE SYSTEM:

None.

Treasury/IRS 34.016

SYSTEM NAME:

Security Clearance Files—Treasury/IRS.

SYSTEM LOCATION:

Personnel Security Office. (See the IRS Appendix below for address.)

CATEGORIES OF INDIVIDUALS COVERED BY THE SYSTEM:

Employees and contractors who require security clearance, or have their security clearance canceled or transferred; individuals who have violated IRS security regulations regarding classified national security information.

CATEGORIES OF RECORDS IN THE SYSTEM:

Name, employing office, date of security clearance, level of clearance, reason for the need for the national security clearance, and any changes in such clearance. Security violations records contain name of violator, circumstance of violation and supervisory action taken.

AUTHORITY FOR MAINTENANCE OF THE SYSTEM:

5 U.S.C. 301 and Executive Order 11222.

PURPOSE:

To administer the national security clearance program.

ROUTINE USES: OF RECORDS MAINTAINED IN THE SYSTEM, INCLUDING CATEGORIES OF USERS AND THE PURPOSES OF SUCH USES:

Records may be used as described below if the IRS deems that the purpose of the disclosure is compatible with the purpose for which IRS collected the records, and no privilege is asserted.

(1) Disclose information to the Department of Justice (DOJ) when seeking legal advice or for use in any proceeding, or in preparation for any proceeding, when: (a) The IRS or any component thereof; (b) any IRS employee in his or her official capacity; (c) any IRS employee in his or her individual capacity if the IRS or DOJ has agreed to provide representation for the employee; or (d) the United States is a party to, has an interest in, or is likely to be affected by, the proceeding and the IRS or DOJ determines that the records are relevant and necessary to the proceeding or advice sought.

(2) Disclose information in a proceeding (including discovery) before a court, administrative tribunal, or other adjudicative body when: (a) The IRS or any component thereof: (b) any IRS employee in his or her official capacity; (c) any IRS employee in his or her personal capacity if the IRS or the DOJ has agreed to provide representation for the employee; or (d) the United States is a part to, has an interest in, or is likely to be affected by, the proceeding, and the IRS or the DOJ determines that the information is relevant and necessary. Information may be disclosed to the adjudicative body to resolve issues of relevancy, necessity, or privilege pertaining to the information.

(3) Disclose information to agencies and on a need-to-know basis to determine the current status of an individual's security clearance.

(4) To appropriate agencies, entities, and persons when: (a) The IRS suspects or has confirmed that the security or confidentiality of information in the system of records has been compromised; (b) the IRS has determined that as a result of the suspected or confirmed compromise there is a risk of harm to economic or property interests, identity theft or fraud, or harm to the security or integrity of this system or other systems or programs (whether maintained by the IRS or another agency or entity) that rely upon the compromised information; and (c) the disclosure made to such agencies, entities, and persons is reasonably necessary to assist in connection with IRS efforts to respond to the suspected or confirmed compromise and prevent, minimize, or remedy such harm.

POLICIES AND PRACTICES FOR STORING, RETRIEVING, ACCESSING, RETAINING, AND DISPOSING OF RECORDS IN THE SYSTEM:

STORAGE:

Paper records and electronic media.

RETRIEVABILITY:

By name or Social Security Number of the employee.

SAFEGUARDS:

Access controls are not less than those published in IRM 10.8, Information Technology (IT) Security, and IRM 10.2, Physical Security Program.

RETENTION AND DISPOSAL:

Records are maintained in accordance with IRM 1.15, Records Management (also see Documents 12829 and 12990).

SYSTEM MANAGER AND ADDRESS:

Director, Personnel Security (See the IRS Appendix below for address.)

NOTIFICATION PROCEDURE:

Individuals seeking to determine if this system of records contains a record pertaining to themselves may inquire in accordance with instructions appearing at 31 CFR part 1, subpart C, appendix B. Inquiries should be addressed as in ''Record Access Procedures'' below.

RECORD ACCESS PROCEDURES:

Individuals seeking access to any record contained in this system of records, or seeking to contest its content, may inquire in accordance with instructions appearing at 31 CFR part 1, subpart C, appendix B. Inquiries should be addressed to the Disclosure Office for Privacy Act requests listed in the IRS Appendix below.

CONTESTING RECORD PROCEDURES:

See ''Record Access Procedures'' above.

RECORD SOURCE CATEGORIES:

Security Clearance Records: Employee, employee's personnel records, employee's supervisor. Security Violation Records: guard reports, security inspections, supervisor's reports, etc.

EXEMPTIONS CLAIMED FOR THE SYSTEM:

None.

Treasury/IRS 34.021

SYSTEM NAME:

Personnel Security Investigations—Treasury/IRS.

SYSTEM LOCATION:

Personnel Security Office. See IRS Appendix below for address.

CATEGORIES OF INDIVIDUALS COVERED BY THE SYSTEM:

Current, former and prospective employees of IRS, and private contractors at IRS and lock box facilities.

CATEGORIES OF RECORDS IN THE SYSTEM:

Records pertaining to background investigations including application information, references, military service, work and academic history, financial and tax information, reports of findings and contacts with third party witnesses.

AUTHORITY FOR MAINTENANCE OF THE SYSTEM:

5 U.S.C. 301, 26 U.S.C. 7801, Executive Orders 10450 and 11222.

PURPOSE:

To carry out personnel security investigations as to a person's character, reputation and loyalty to the United States, so as to determine that person's suitability for employment, retention in employment, or the issuance of security clearances.

ROUTINE USES: OF RECORDS MAINTAINED IN THE SYSTEM, INCLUDING CATEGORIES OF USERS AND THE PURPOSES OF SUCH USES:

Disclosure of returns and return information may be made only as provided by 26 U.S.C. 6103. All other records may be used as described below if the IRS deems that the purpose of the disclosure is compatible with the purpose for which IRS collected the records, and no privilege is asserted.

(1) Disclose information to the Department of Justice (DOJ) when seeking legal advice, or for use in any proceeding, or in preparation for any proceeding, when: (a) The IRS or any component thereof; (b) any IRS employee in his or her official capacity; (c) any IRS employee in his or her individual capacity if the IRS or the DOJ has agreed to provide representation for the employee; or (d) the United States is a party to, has an interest in, or is likely to be affected by the proceeding, and the IRS determines that the records are relevant and useful.

(2) Disclose information in a proceeding (including discovery) before a court, administrative tribunal, or other adjudicative body when: (a) The IRS or any component thereof; (b) any IRS employee in his or her official capacity; (c) any IRS employee in his or her personal capacity if the IRS or DOJ has agreed to provide representation for the employee; or (d) the United States is a party to, has an interest in, or is likely to be affected by, the proceeding and the IRS or DOJ determines that the information is relevant and necessary to the proceeding. Information may be disclosed to the adjudicative body to resolve issues of relevancy, necessity, or privilege pertaining to the information.

(3) Disclose information to a Federal, state, local, or tribal agency, or other public authority, which has requested information relevant or necessary to hiring or retaining an employee, or issuing or continuing a contract, security clearance, license, grant, or other benefit.

(4) Disclose information to an appropriate Federal, state, local, tribal, or foreign agency, or other public authority, responsible for implementing or enforcing, or for investigating or prosecuting the violation of, a statute, rule, regulation, order, or license, when a record on its face, or in conjunction with other records, indicates a potential violation of law or regulation and the information disclosed is relevant to any regulatory, enforcement, investigative, or prosecutorial responsibility of the receiving authority.

(5) Disclose information to the news media as described in the IRS Policy Statement P–1–183, News Coverage to Advance Deterrent Value of Enforcement Activities Encouraged, IRM 1.2.1.2.41.

(6) Disclose information to third parties during the course of an investigation to the extent necessary to obtain information pertinent to the investigation.

(7) To appropriate agencies, entities, and persons when: (a) The IRS suspects or has confirmed that the security or confidentiality of information in the system of records has been compromised; (b) the IRS has determined that as a result of the suspected or confirmed compromise there is a risk of harm to economic or property interests, identity theft or fraud, or harm to the security or integrity of this system or other systems or programs (whether maintained by the IRS or another agency or entity) that rely upon the compromised information; and (c) the disclosure made to such agencies, entities, and persons is reasonably necessary to assist in connection with IRS efforts to respond to the suspected or confirmed compromise and prevent, minimize, or remedy such harm.

POLICIES AND PRACTICES FOR STORING, RETRIEVING, ACCESSING, RETAINING, AND DISPOSING OF RECORDS IN THE SYSTEM:

STORAGE:

Paper records and electronic media.

RETRIEVABILITY:

By employee's name or Social Security Number or administrative case control number.

SAFEGUARDS:

Access controls are not less than those published in IRM 10.8, Information Technology (IT) Security, and IRM 10.2, Physical Security Program.

RETENTION AND DISPOSAL:

Records are maintained in accordance with IRM 1.15, Records Management (also see Documents 12829 and 12990).

SYSTEM MANAGER AND ADDRESS:

Director, Personnel Security. (See the IRS Appendix below for address.)

NOTIFICATION PROCEDURE:

This system may not be accessed for purposes of determining whether the system contains a record pertaining to a particular individual; the records are exempt under 5 U.S.C. 552a(k)(5).

RECORD ACCESS PROCEDURES:

This system may not be accessed for purposes of inspection or in order to contest the content of records; the records are exempt under 5 U.S.C. 552a(k)(5).

CONTESTING RECORD PROCEDURES:

26 U.S.C. 7852(e) prohibits Privacy Act amendment of tax records. Other records are exempt from contest as stated in ''Record Access Procedures'' above.

RECORD SOURCE CATEGORIES:

Subjects of investigation (through employment application forms and interviews, or financial information); third parties including Federal, state and local government agencies (police, court and vital statistics records), credit reporting agencies, schools and others; and tax returns and examination results.

EXEMPTIONS CLAIMED FOR THE SYSTEM:

This system has been designated exempt from sections (c)(3), (d)(1)–(4), (e)(1), (e)(4)(G)–(I), and (f) of the Privacy Act, pursuant to 5 U.S.C. 552a(k)(5). (See 31 CFR 1.36).

Treasury/IRS 34.022

SYSTEM NAME:

Automated Background Investigations System (ABIS)—Treasury/IRS.

SYSTEM LOCATION:

Personnel Security Office. (See the IRS Appendix below for address.)

CATEGORIES OF INDIVIDUALS COVERED BY THE SYSTEM:

Current and former employees of IRS, contractors for IRS/Treasury and Lockbox employees.

CATEGORIES OF RECORDS IN THE SYSTEM:

Records pertaining to background investigations, including: (1) ABIS records contain Personnel Security employee name, office, start of employment, series/grade, title, separation date; (2) ABIS tracking records contain investigative status information from point of initiation through conclusion; (3) ABIS timekeeping records contain assigned cases and distribution of time; (4) ABIS records contain background investigations; and (5) levels of clearance, date of clearance and any change in status of clearance.

AUTHORITY FOR MAINTENANCE OF THE SYSTEM:

5 U.S.C. 301, 26 U.S.C. 7801, and Executive Order 11222.

PURPOSE:

To track and administer background investigation records and to analyze trends in suitability matters.

ROUTINE USES: OF RECORDS MAINTAINED IN THE SYSTEM, INCLUDING CATEGORIES OF USERS AND THE PURPOSES OF SUCH USES:

Disclosure of returns and return information may be made only as provided by 26 U.S.C. 6103. All other records may be used as described below if the IRS deems that the purpose of the disclosure is compatible with the purpose for which IRS collected the records, and no privilege is asserted.

(1) Disclose information to the Department of Justice (DOJ) when seeking legal advice or for use in any proceeding, or in preparation for any proceeding, when: (a) The IRS or any component thereof; (b) any IRS employee in his or her official capacity; (c) any IRS employee in his or her individual capacity if the IRS or DOJ has agreed to provide representation for the employee; or (d) the United States is a party to, has an interest in, or is likely to be affected by, the proceeding and the IRS determines that the records are relevant and necessary to the proceeding or advice sought.

(2) Disclose information in a proceeding (including discovery) before a court, administrative tribunal, or other adjudicative body when: (a) The IRS or any component thereof; (b) any IRS employee in his or her official capacity; (c) any IRS employee in his or her personal capacity if the IRS or DOJ has agreed to provide representation for the employee; or (d) the United States is a party to, has an interest in, or is likely to be affected by, the proceeding and the IRS or DOJ determines that information may be disclosed to the adjudicative body to resolve issues of relevancy, necessity, or privilege pertaining to the information.

(3) Disclose information to a Federal, state, local, or tribal agency, or other public authority, which has requested information relevant or necessary to hiring or retaining an employee, or issuing or continuing a contract, security clearance, license, grant, or other benefit.

(4) Disclose information to an appropriate Federal, state, local, tribal, or foreign agency, or other public authority, responsible for implementing or enforcing, or for investigating or prosecuting the violation of, a statute, rule, regulation, order, or license, when a record on its face, or in conjunction with other records, indicates a potential violation of law or regulation and the information disclosed is relevant to any regulatory, enforcement, investigative, or prosecutorial responsibility of the receiving authority.

(5) Disclose information to third parties during the course of an investigation to the extent necessary to obtain information pertinent to the investigation.

(6) Disclose information to the news media as described in the IRS Policy Statement P–1–183, News Coverage to Advance Deterrent Value of Enforcement Activities Encouraged, IRM 1.2.1.2.41.

(7) Disclose information to professional organizations or associations with which individuals covered by this system of records may be affiliated, such as state bar disciplinary authorities, to meet their responsibilities in connection with the administration and maintenance of standards of conduct and discipline.

(8) To appropriate agencies, entities, and persons when: (a) The IRS suspects or has confirmed that the security or confidentiality of information in the system of records has been compromised; (b) the IRS has determined that as a result of the suspected or confirmed compromise there is a risk of harm to economic or property interests, identity theft or fraud, or harm to the security or integrity of this system or other systems or programs (whether maintained by the IRS or another agency or entity) that rely upon the compromised information; and (c) the disclosure made to such agencies, entities, and persons is reasonably necessary to assist in connection with IRS efforts to respond to the suspected or confirmed compromise and prevent, minimize, or remedy such harm.

POLICIES AND PRACTICES FOR STORING, RETRIEVING, ACCESSING, RETAINING,AND DISPOSING OF RECORDS IN THE SYSTEM:

STORAGE:

Paper records and electronic media.

RETRIEVABILITY:

By name of individual to whom it applies, Social Security Number, alias, or date of birth.

SAFEGUARDS:

Access controls are not less than those published in IRM 10.8, Information Technology (IT) Security, and IRM 10.2, Physical Security Program.

RETENTION AND DISPOSAL:

Records are maintained in accordance with IRM 1.15, Records Management (also see Documents 12829 and 12990).

SYSTEM MANAGER AND ADDRESS:

Director, Personnel Security. (See the IRS Appendix below for address.)

NOTIFICATION PROCEDURE:

This system may not be accessed for purposes of determining whether the system contains a record pertaining to a particular individual; the records are exempt under 5 U.S.C. 552a(k)(5).

RECORD ACCESS PROCEDURES:

This system may not be accessed for purposes of determining whether the system contains a record pertaining to a particular individual; the records are exempt under 5 U.S.C. 552a(k)(5).

CONTESTING RECORD PROCEDURES:

26 U.S.C. 7852(e) prohibits Privacy Act amendment of tax records. Other records are exempt from contest as stated in ''Record Access Procedures'' above.

RECORD SOURCE CATEGORIES:

Personnel Security employees, Subjects of investigation (through employment application forms and interviews, or financial information); third parties including Federal, state and local government agencies (police, court and vital statistics records), credit reporting agencies, schools and others; and tax returns and examination results.

EXEMPTIONS CLAIMED FOR THE SYSTEM:

This system has been designated exempt from sections (c)(3), (d)(1)–(4), (e)(1), (e)(4)(G)–(I), and (f) of the Privacy Act, pursuant to 5 U.S.C. 552a(k)(5). (See 31 CFR 1.36).

Treasury/IRS 34.037

SYSTEM NAME:

Audit Trail and Security Records—Treasury/IRS.

SYSTEM LOCATION:

National Office, field, computing center, and campus offices. (See the IRS Appendix below for address.)

CATEGORIES OF INDIVIDUALS COVERED BY THE SYSTEM:

Individuals who have accessed, by any means, information contained within IRS electronic or paper records or who have otherwise used any IRS computing equipment/resources, including access to Internet sites; individuals whose information is accessed using IRS computing equipment/resources; and IRS employees and contractors who use IRS equipment to end electronic communications.

CATEGORIES OF RECORDS IN THE SYSTEM:

Records concerning the use of IRS computing equipment or other resources by employees, contractors, or other individuals to access IRS information; records concerning individuals whose information was accessed using IRS computing equipment/resources; records identifying what information accessed; records concerned the use of IRS computer equipment and other resources to send electronic communications; and records concerning the investigation of such incidents.

AUTHORITY FOR MAINTENANCE OF THE SYSTEM:

5 U.S.C. 301, 26 U.S.C. 7801, and 18 U.S.C. 1030(a)(2)(B).

PURPOSE:

To identify and track any unauthorized accesses to sensitive but unclassified information and potential breaches or unauthorized disclosures of such information or inappropriate use of government computers to access Internet sites for any purpose forbidden by IRS policy (*e.g.,* gambling, playing computer games, or engaging in illegal activity), or to detect electronic communications sent using IRS systems in violation of IRS security policy.

ROUTINE USES: OF RECORDS MAINTAINED IN THE SYSTEM INCLUDING CATEGORIES OF USERS AND THE PURPOSES OF SUCH USES:

Disclosure of returns and return information may be made only as provided by 26 U.S.C. 6103. All other records may be used as described below if the IRS deems that the purpose of the disclosure is compatible with the purpose for which IRS collected the records, and no privilege is asserted.

(1) Disclose information to the Department of Justice (DOJ) when seeking legal advice or for use in any proceeding, or in preparation for any proceeding, when: (a) The IRS or any component thereof; (b) any IRS employee in his or her official capacity; (c) any IRS employee in his or her individual capacity if the IRS or DOJ has agreed to provide representation for the employee; or (d) the United States is a party to, has an interest in, or is likely to be affected by, the proceeding and the IRS determines that the records are relevant and necessary to the proceeding or advice sought.

(2) Disclose information in a proceeding (including discovery) before a court, administrative tribunal, or other adjudicative body when: (a) The IRS or any component thereof; (b) any IRS employee in his or her official capacity; (c) any IRS employee in his or her personal capacity if the IRS or DOJ has agreed to provide representation for the employee; or (d) the United States is a party to, has an interest in, or is likely to be affected by, the proceeding and the IRS or DOJ determines that the information is relevant and necessary to the proceeding. Information may be disclosed to the adjudicative body to resolve issues of relevancy, necessity, or privilege pertaining to the information.

(3) Disclose information to an appropriate Federal, state, local, tribal, or foreign agency, or other public authority, responsible for implementing or enforcing, or for investigating or prosecuting the violation of, a statute, rule, regulation, order, or license, when a record on its face, or in conjunction with other records, indicates a potential violation of law or regulation and the information disclosed is relevant to any regulatory, enforcement, investigative, or prosecutorial responsibility of the receiving authority.

(4) Disclose information to officials of labor organizations recognized under 5 U.S.C. Chapter 71 when relevant and necessary to their duties of exclusive representation.

(5) Disclose information to third parties during the course of an investigation to the extent necessary to obtain information pertinent to the investigation.

(6) Disclose information to a contractor, including an expert witness or a consultant, hired by the IRS, to the extent necessary for the performance of a contract.

(7) To appropriate agencies, entities, and persons when: (a) The IRS suspects or has confirmed that the security or confidentiality of information in the system of records has been compromised; (b) the IRS has determined that as a result of the suspected or confirmed compromise there is a risk of harm to economic or property interests, identity theft or fraud, or harm to the security or integrity of this system or other systems or programs (whether maintained by the IRS or another agency or entity) that rely upon the compromised information; and (c) the disclosure made to such agencies, entities, and persons is reasonably necessary to assist in connection with IRS efforts to respond to the suspected or confirmed compromise and prevent, minimize, or remedy such harm.

POLICIES AND PRACTICES FOR STORING, RETRIEVING, ACCESSING, RETAINING, AND DISPOSING OF RECORDS IN THE SYSTEM:

STORAGE:

Paper records and electronic media.

RETRIEVABILITY:

By name, Social Security Number (SSN), or the standard employee identification number (SEID) of employee, contractor, or other individual who has been granted access to IRS information, or to IRS equipment and resources, and by incident number. Also by name, SSN or Taxpayer Identification Number (TIN) of entities whose records were accessed.

SAFEGUARDS:

Access controls are not less than those published in IRM 10.8, Information Technology (IT) Security, and IRM 10.2, Physical Security Program.

RETENTION AND DISPOSAL:

Records are maintained in accordance with IRM 1.15, Records Management (also see Documents 12829 and 12990).

SYSTEM MANAGER AND ADDRESS:

Director, Facilities Management and Security Services. See IRS Appendix below for address.

NOTIFICATION PROCEDURE:

This system may not be accessed for purposes of determining whether the system contains a record pertaining to a particular individual; the records are exempt under 5 U.S.C. 552a(k)(2).

RECORD ACCESS PROCEDURES:

This system may not be accessed for purposes of inspection or in order to contest the content of records; the records are exempt under 5 U.S.C. 552a(k)(2).

CONTESTING RECORD PROCEDURES:

26 U.S.C. 7852(e) prohibits Privacy Act amendment of tax records. Other records are exempt from contest as stated in ''Record Access Procedures'' above.

RECORD SOURCE CATEGORIES:

This system of records contains investigatory material compiled for law enforcement purposes whose sources need not be reported.

EXEMPTIONS CLAIMED FOR THE SYSTEM:

This system has been designated exempt from sections (c)(3), (d)(1)–(4), (e)(1), (e)(4)(G)–(I) and (f) of the Privacy Act, pursuant to 5 U.S.C. 552a(k)(2). (See 31 CFR 1.36).

Treasury/IRS 35.001

SYSTEM NAME:

Reasonable Accommodation Request Records—Treasury/IRS.

SYSTEM LOCATION:

National Office, field, computing center, and campus offices. (See the IRS Appendix below for address.)

CATEGORIES OF INDIVIDUALS COVERED BY THE SYSTEM:

Prospective, current and former employees with disabilities who request reasonable accommodation.

CATEGORIES OF RECORDS IN THE SYSTEM:

Records that are used to determine qualification for reasonable accommodation (RA), including medical documentation.

AUTHORITY:

5 U.S.C. 301; Title VII of the Civil Rights Act of 1964, as amended; Civil Rights Act of 1991; The Rehabilitation Act of 1973, 29 U.S.C. 701 *et seq.,* as amended; The Americans with Disabilities Act of 1990, 42 U.S.C. 12101 *et seq.* (ADA); Executive Order 13164, Requiring Federal Agencies to Establish Procedures to Facilitate the Provision of Reasonable Accommodation (July 26, 2000).

PURPOSE:

To track and administer reasonable accommodation requests.

ROUTINE USES: OF RECORDS MAINTAINED IN THE SYSTEM, INCLUDING CATEGORIES OF USERS AND THE PURPOSES OF SUCH USES:

Disclosure of returns and return information may be made only as provided by 26 U.S.C. 6103. Records may be used as described below if the IRS deems that the purpose of the disclosure is compatible with the purpose for which IRS collected the records, and no privilege is asserted.

(1) Disclose information to the Department of Justice (DOJ) when seeking legal advice or for use in any proceeding, or in preparation for any proceeding, when: (a) The IRS or any component thereof; (b) any IRS employee in his or her official capacity; (c) any IRS employee in his or her individual capacity if the IRS or DOJ has agreed to provide representation for the employee; or (d) the United States is a party to, has an interest in, or is likely to be affected by, the proceeding and the IRS determines that the records are relevant and necessary to the proceeding or advice sought.

(2) Disclose information in a proceeding (including discovery) before a court, administrative tribunal, or other adjudicative body when: (a) The IRS or any component thereof; (b) any IRS employee in his or her official capacity; (c) any IRS employee in his or her personal capacity if the IRS or DOJ has agreed to provide representation for the employee; or (d) the United States is a party to, has an interest in, or is likely to be affected by, the proceeding and the IRS or DOJ determines that the information is relevant and necessary to the proceeding. Information may be disclosed to the adjudicative body to resolve issues of relevancy, necessity, or privilege pertaining to the information.

(3) Disclose information to a Federal, state, local, or tribal agency, or other public authority, which has requested information relevant or necessary to hiring or retaining an employee, or issuing or continuing a contract, security clearance, license, grant, or other benefit.

(4) Disclose information to an appropriate Federal, state, local, tribal, or foreign agency, or other public authority, responsible for implementing or enforcing, or for investigating or prosecuting the violation of, a statute, rule, regulation, order, or license, when a record on its face, or in conjunction with other records, indicates a potential violation of law or regulation and the information disclosed is relevant to any regulatory, enforcement, investigative, or prosecutorial responsibility of the receiving authority.

(5) Disclose information to the news media as described in the IRS Policy Statement P–1–183, News Coverage to Advance Deterrent Value of Enforcement Activities Encouraged, IRM 1.2.1.2.41.

(6) Disclose information to officials of labor organizations recognized under 5 U.S.C. Chapter 71 when relevant and necessary to their duties of exclusive representation.

(7) Disclose information to third parties during the course of an investigation to the extent necessary to obtain information pertinent to the investigation.

(8) Disclose information to a contractor, including an expert witness or a consultant, hired by the IRS, to the extent necessary for the performance of a contract.

(9) Disclose information to an arbitrator, mediator, or other neutral, in the context of alternative dispute resolution, to the extent relevant and necessary for resolution of the matters presented, including asserted privileges. Information may also be disclosed to the parties in the alternative dispute resolution proceeding.

(10) Disclose information to the Merit Systems Protection Board and the Office

of Special Counsel in personnel, discrimination, and labor management matters when relevant and necessary to their duties.

(11) Disclose information to foreign governments in accordance with international agreements.

(12) Disclose information to the Office of Personnel Management and/or to the Equal Employment Opportunity Commission in personnel, discrimination, and labor management matters when relevant and necessary to their duties.

(13) To appropriate agencies, entities, and persons when: (a) The IRS suspects or has confirmed that the security or confidentiality of information in the system of records has been compromised; (b) the IRS has determined that as a result of the suspected or confirmed compromise there is a risk of harm to economic or property interests, identity theft or fraud, or harm to the security or integrity of this system or other systems or programs (whether maintained by the IRS or another agency or entity) that rely upon the compromised information; and (c) the disclosure made to such agencies, entities, and persons is reasonably necessary to assist in connection with IRS efforts to respond to the suspected or confirmed compromise and prevent, minimize, or remedy such harm.

POLICIES AND PRACTICES FOR STORING, RETRIEVING, ACCESSING, RETAINING, AND DISPOSING OF RECORDS IN THE SYSTEM:

STORAGE:

Paper records and electronic media.

RETRIEVABILITY:

Name of employee or applicant for employment who requests reasonable accommodation, and administrative case control number.

SAFEGUARDS:

Access controls are not less than those published in IRM 10.8, Information Technology (IT) Security, and IRM 10.2, Physical Security Program.

RETENTION AND DISPOSAL:

Records are maintained in accordance with IRM 1.15, Records Management (also see Documents 12829 and 12990).

SYSTEM MANAGER AND ADDRESS:

Chief, Office of Equal Employment and Diversity. (See the IRS Appendix below for address.)

NOTIFICATION PROCEDURE:

Individuals seeking to determine if this system of records contains a record pertaining to themselves may inquire in accordance with instructions appearing at 31 CFR part 1, subpart C, appendix B. Inquiries should be addressed as in ''Record Access Procedures'' below.

RECORD ACCESS PROCEDURES:

Individuals seeking access to any record contained in this system of records, or seeking to contest its content, may inquire in accordance with instructions appearing at 31 CFR part 1, subpart C, appendix B. Inquiries should be addressed to the Disclosure Office for Privacy Act requests listed in the IRS Appendix below.

CONTESTING RECORD PROCEDURES:

See ''Record Access Procedures'' above.

RECORD SOURCE CATEGORIES:

Individual requesting accommodation; individual's manager, individual's medical practitioner; agency medical representative.

EXEMPTIONS:

None.

Treasury/IRS 36.001

SYSTEM NAME:

Appeals, Grievances and Complaints Records—Treasury/IRS.

SYSTEM LOCATION:

National Office, field, computer center, and campus offices. (See the IRS Appendix below for address.)

CATEGORIES OF INDIVIDUALS COVERED BY THE SYSTEM:

Applicants for Federal employment, current and former Federal employees (including annuitants) who submit appeals, grievances, or complaints for resolution.

CATEGORIES OF RECORDS IN THE SYSTEM:

This system of records contains information or documents relating to a decision or determination made by the IRS or other organization (*e.g.,* Office of Personnel Management, Equal Employment Opportunity Commission, Merit Systems Protection Board) affecting the employment status of an individual. The records consist of the initial appeal or complaint, letters or notices to the individual, record of hearings when conducted, materials placed into the record to support the decision or determination, affidavits or statements, testimonies of witnesses, investigative reports, instructions to an agency about action to be taken to comply with decisions, and related correspondence, opinions and recommendations. Automated Labor and Employee Relations Tracking System (ALERTS) records are included to provide administrative tracking for personnel administration.

AUTHORITY FOR MAINTENANCE OF THE SYSTEM:

5 U.S.C. 1302, 3301, 3302, 4308, 5115, 5338, 5351, 5388, 7105, 7151, 7154, 7301, 7512, 7701 and 8347, Executive Orders 9830, 10577, 10987, 11222, 11478 and 11491; and Pub. L. 92–261 (EEO Act of 1972), and Pub. L. 93–259.

PURPOSE:

To track, and process, employment-related appeals, grievances and complaints.

ROUTINE USES: OF RECORDS MAINTAINED IN THE SYSTEM, INCLUDING CATEGORIES OF USERS AND THE PURPOSES OF SUCH USES:

Disclosure of returns and return information may be only made as provided by 26 U.S.C. 6103. All other records may be used as described below if the IRS deems that the purpose of the disclosure is compatible with the purpose for which IRS collected the records, and no privilege is asserted.

(1) Disclose information to the Department of Justice (DOJ) when seeking legal advice or for use in any proceeding, or in preparation for any proceeding, when: (a) The IRS or any component thereof; (b) any IRS employee in his or her official capacity; (c) any IRS employee in his or her individual capacity if the IRS or DOJ has agreed to provide representation for the employee; or (d) the United States is a party to, has an interest in, or is likely to be affected by, the proceeding and the IRS determines that the records are relevant and necessary to the proceeding or advice sought.

(2) Disclose information in a proceeding (including discovery) before a court, administrative tribunal, or other adjudicative body when: (a) The IRS or any component thereof; (b) any IRS employee in his or her official capacity; (c) any IRS employee in his or her personal capacity if the IRS or DOJ has agreed to provide representation for the employee; or (d) the United States is a party to, has an interest in, or is likely to be affected by, the proceeding and the IRS or DOJ determines that the information is relevant and necessary to the proceeding. Information may be disclosed to the adjudicative body to resolve issues of relevancy, necessity, or privilege pertaining to the information.

(3) Disclose information to a Federal, state, local, or tribal agency, or other public authority, which has requested information relevant or necessary to hiring or retaining an employee, or issuing or continuing a contract, security clearance, license, grant, or other benefit.

(4) Disclose information to an appropriate Federal, state, local, tribal, or foreign agency, or other public

authority, responsible for implementing or enforcing, or for investigating or prosecuting the violation of, a statute, rule, regulation, order, or license, when a record on its face, or in conjunction with other records, indicates a potential violation of law or regulation and the information disclosed is relevant to any regulatory, enforcement, investigative, or prosecutorial responsibility of the receiving authority.

(5) Disclose information to officials of labor organizations recognized under 5 U.S.C. Chapter 71 when relevant and necessary to their duties of exclusive representation.

(6) Disclose information to third parties during the course of an investigation to the extent necessary to obtain information pertinent to the investigation.

(7) Disclose information to a contractor, including an expert witness or a consultant, hired by the IRS, to the extent necessary for the performance of a contract.

(8) Disclose information to a Member of Congress regarding the status of an appeal, complaint or grievance.

(9) Disclose information to other agencies to the extent provided by law or regulation and as necessary to report apparent violations of law to appropriate law enforcement agencies.

(10) Disclose information to the Office of Personnel Management, Merit Systems Protection Board or Equal Employment Opportunity Commission for the purpose of properly administering Federal Personnel Systems in accordance with applicable laws, Executive Orders and regulations.

(11) To appropriate agencies, entities, and persons when: (a) The IRS suspects or has confirmed that the security or confidentiality of information in the system of records has been compromised; (b) the IRS has determined that as a result of the suspected or confirmed compromise there is a risk of harm to economic or property interests, identity theft or fraud, or harm to the security or integrity of this system or other systems or programs (whether maintained by the IRS or another agency or entity) that rely upon the compromised information; and (c) the disclosure made to such agencies, entities, and persons is reasonably necessary to assist in connection with IRS efforts to respond to the suspected or confirmed compromise and prevent, minimize, or remedy such harm.

POLICIES AND PRACTICES FOR STORING, RETRIEVING, ACCESSING, RETAINING, AND DISPOSING OF RECORDS IN THE SYSTEM:

STORAGE:

Paper records and electronic media.

RETRIEVABILITY:

By name of the individual and administrative case control number.

SAFEGUARDS:

Access controls are not less than those published in IRM 10.8, Information Technology (IT) Security, and IRM 10.2, Physical Security Program.

RETENTION AND DISPOSAL:

Records are maintained in accordance with IRM 1.15, Records Management (also see Documents 12829 and 12990).

SYSTEM MANAGER AND ADDRESS:

Chief, Office of Equal Employment and Diversity and Human Capital Officer. (See the IRS Appendix below for address.)

NOTIFICATION PROCEDURE:

Individuals seeking to determine if this system of records contains a record pertaining to themselves may inquire in accordance with instructions appearing at 31 CFR part 1, subpart C, appendix B. Inquiries should be addressed as in ''Record Access Procedures'' below.

RECORD ACCESS PROCEDURES:

Individuals seeking access to any record contained in this system of records, or seeking to contest its content, may inquire in accordance with instructions appearing at 31 CFR part 1, subpart C, appendix B. Inquiries should be addressed to the Disclosure Office for Privacy Act requests listed in the IRS Appendix below.

CONTESTING RECORD PROCEDURES:

See ''Record Access Procedures'' above.

RECORD SOURCE CATEGORIES:

Individuals who file complaints or grievances, IRS and/or other authorized Federal officials, affidavits or statements from employees, testimony of witnesses, official documents relating to the appeal, grievance, or complaints, and third party correspondence.

EXEMPTIONS:

None.

Treasury/IRS 36.003

SYSTEM NAME:

General Personnel and Payroll Records—Treasury/IRS.

SYSTEM LOCATION:

Current employee personnel records: National Office, field, computing center and campus offices. Current employee payroll records: Transactional Processing Center (TPC), U.S. Department of Agriculture, National Finance Center. Former employee personnel records: The National Archives and Records Administration, National Personnel Records Center.

CATEGORIES OF INDIVIDUALS COVERED BY THE SYSTEM:

Prospective, current and former employees.

CATEGORIES OF RECORDS IN THE SYSTEM:

This system consists of a wide variety of records relating to personnel actions and determinations made about an individual while employed in the Federal service, including information required by the Office of Personnel Management (OPM) and maintained in the Official Personnel File (OPF) or Employee Personnel File (EPF). Information is also maintained electronically in Automated Labor and Employee Relations Tracking System (ALERTS) and Totally Automated Personnel System (TAPS). Listing of employee pseudonyms and Forms 3081 is also included. This system also includes personnel and payroll records (*e.g.,* office/building security records, disciplinary action records, travel/moving expense records, insurance/beneficiary records, personal addresses, personal telephone numbers, personal email addresses, emergency contact information, payroll deduction records).

AUTHORITY FOR MAINTENANCE OF THE SYSTEM:

5 U.S.C. 301, 1302, 2951, 4118, 4308, 4506 and Executive Orders 9397 and 10561.

PURPOSE:

To administer personnel and payroll programs.

ROUTINE USES: OF RECORDS MAINTAINED IN THE SYSTEM, INCLUDING CATEGORIES OF USERS AND THE PURPOSES OF SUCH USES:

Disclosure of returns and return information may be made only as provided by 26 U.S.C. 6103. Records may be used as described below if the IRS deems that the purpose of the disclosure is compatible with the purpose for which IRS collected the records, and no privilege is asserted.

(1) Disclose information to the Department of Justice (DOJ) when seeking legal advice or for use in any proceeding, or in preparation for any proceeding, when: (a) The IRS or any component thereof; (b) any IRS employee in his or her official capacity; (c) any IRS employee in his or her individual capacity if the IRS or DOJ has agreed to provide representation for the

employee; or (d) the United States is a party to, has an interest in, or is likely to be affected by, the proceeding and the IRS determines that the records are relevant and necessary to the proceeding or advice sought.

(2) Disclose information in a proceeding (including discovery) before a court, administrative tribunal, or other adjudicative body when: (a) The IRS or any component thereof; (b) any IRS employee in his or her official capacity; (c) any IRS employee in his or her personal capacity if the IRS or DOJ has agreed to provide representation for the employee; or (d) the United States is a party to, has an interest in, or is likely to be affected by, the proceeding and the IRS or DOJ determines that the information is relevant and necessary to the proceeding. Information may be disclosed to the adjudicative body to resolve issues of relevancy, necessity, or privilege pertaining to the information.

(3) Disclose information to a Federal, state, local, or tribal agency, or other public authority, which has requested information relevant or necessary to hiring or retaining an employee, or issuing or continuing a contract, security clearance, license, grant, or other benefit.

(4) Disclose information to an appropriate Federal, state, local, tribal, or foreign agency, or other public authority, responsible for implementing or enforcing, or for investigating or prosecuting the violation of, a statute, rule, regulation, order, or license, when a record on its face, or in conjunction with other records, indicates a potential violation of law or regulation and the information disclosed is relevant to any regulatory, enforcement, investigative, or prosecutorial responsibility of the receiving authority.

(5) Disclose information to the news media as described in the IRS Policy Statement P–1–183, News Coverage to Advance Deterrent Value of Enforcement Activities Encouraged, IRM 1.2.1.2.41.

(6) Disclose information to officials of labor organizations recognized under 5 U.S.C. Chapter 71 when relevant and necessary to their duties of exclusive representation.

(7) Disclose information to third parties during the course of an investigation to the extent necessary to obtain information pertinent to the investigation.

(8) Disclose information to a contractor, including an expert witness or a consultant, hired by the IRS, to the extent necessary for the performance of a contract.

(9) Disclose information to a prospective employer of an IRS employee or former IRS employee.

(10) Disclose information to hospitals and similar institutions or organizations involved in voluntary blood donation activities.

(11) Disclose information to educational institutions for recruitment and cooperative education purposes.

(12) Disclose information to financial institutions for payroll purposes.

(13) Disclose information about particular Treasury employees to requesting Federal agencies or non-Federal entities under approved computer matching efforts, limited to only those data elements considered relevant to making a determination of eligibility under particular benefit programs administered by those agencies or entities or by the Department of the Treasury or any constituent unit of the Department, to improve program integrity, and to collect debts and other monies owed under those programs.

(14) Disclose information to respond to state and local authorities for support garnishment interrogatories.

(15) Disclose information to private creditors for the purpose of garnishment of wages of an employee if a debt has been reduced to a judgment.

(16) Disclose records to the Office of Personnel Management, Merit Systems Protection Board, Equal Employment Opportunity Commission, and General Accounting Office for the purpose of properly administering Federal Personnel systems or other agencies' systems in accordance with applicable laws, Executive Orders, and applicable regulations;

(17) Disclose information to a Federal, state, or local agency so that the agency may adjudicate an individual's eligibility for a benefit, such as a state unemployment compensation board, housing administration agency and Social Security Administration;

(18) Disclose information to another agency such as the Department of Labor or Social Security Administration and state and local taxing authorities as required by law for payroll purposes;

(19) Disclose information to Federal agencies to effect inter-agency salary offset; to effect inter-agency administrative offset to the consumer reporting agency for obtaining commercial credit reports; and to a debt collection agency for debt collection services;

(20) To appropriate agencies, entities, and persons when: (a) The IRS suspects or has confirmed that the security or confidentiality of information in the system of records has been compromised; (b) the IRS has determined that as a result of the suspected or confirmed compromise there is a risk of harm to economic or property interests, identity theft or fraud, or harm to the security or integrity of this system or other systems or programs (whether maintained by the IRS or another agency or entity) that rely upon the compromised information; and (c) the disclosure made to such agencies, entities, and persons is reasonably necessary to assist in connection with IRS efforts to respond to the suspected or confirmed compromise and prevent, minimize, or remedy such harm.

DISCLOSURE TO CONSUMER REPORTING AGENCIES:

Disclosures pursuant to 5 U.S.C. 552a(b)(12). Disclosures of debt information concerning a claim against an individual may be made from this system to consumer reporting agencies as defined in the Fair Credit Reporting Act (15 U.S.C. 1681a(f)) or the Federal Claims Collection Act of 1966 (31 U.S.C. 3701(a)(3)).

POLICIES AND PRACTICES FOR STORING, RETRIEVING, ACCESSING, RETAINING, AND DISPOSING OF RECORDS IN THE SYSTEM:

STORAGE:

Paper records and electronic media.

RETRIEVABILITY:

Name, Social Security Number (SSN) or other employee identifier, such as standard employee identification number (SEID) or badge number.

SAFEGUARDS:

Access controls are not less than those published in IRM 10.8, Information Technology (IT) Security, and IRM 10.2, Physical Security Program.

RETENTION AND DISPOSAL:

Records are maintained in accordance with IRM 1.15, Records Management (also see Documents 12829 and 12990).

SYSTEM MANAGER(S) AND ADDRESS:

Chief, Human Capital Office. (See the IRS Appendix below for address.)

NOTIFICATION PROCEDURE:

Individuals seeking to determine if this system of records contains a record pertaining to themselves may inquire in accordance with instructions appearing at 31 CFR part 1, subpart C, appendix B. Inquiries should be addressed as in ''Record Access Procedures'' below.

RECORD ACCESS PROCEDURES:

Individuals seeking access to any record contained in this system of records, or seeking to contest its

content, may inquire in accordance with instructions appearing at 31 CFR part 1, subpart C, appendix B. Inquiries should be addressed to the Disclosure Office for Privacy Act requests listed in the IRS Appendix below.

CONTESTING RECORD PROCEDURES:

See ''Record Access Procedures'' above.

RECORD SOURCE CATEGORIES:

Personnel and payroll records come from the individual to whom they apply or from agency officials.

EXEMPTIONS CLAIMED FOR THE SYSTEM:

None

Treasury/IRS 37.006

SYSTEM NAME:

Correspondence, Miscellaneous Records, and Information Management Records—Treasury/IRS.

SYSTEM LOCATION:

Office of Professional Responsibility (OPR), Internal Revenue Service (IRS), Washington, DC; Detroit Computing Center, Detroit, Michigan; Martinsburg, West Virginia; and Memphis, Tennessee.

CATEGORIES OF INDIVIDUALS COVERED BY THE SYSTEM:

Individuals who correspond with OPR, individuals on whose behalf correspondence is initiated, and individuals who are the subject of correspondence; individuals who file, pursuant to 31 CFR part 10, program sponsor agreements for continuing professional education for enrolled agents or enrolled retirement plan agents; individuals who request, pursuant to 31 CFR part 10, authorization to make a special appearance before the IRS to represent another person in a particular matter; former Government employees who, pursuant to 31 CFR part 10, submit statements that their current firm has isolated them from representations that would create a post-employment conflict of interest; individuals who appeal from determinations that they are ineligible to engage in limited practice before the IRS under 31 CFR part 10; and individuals who serve as point of contact for organizations (including organizations that apply for recognition as a sponsor of continuing professional education for enrolled agents or enrolled retirement plan agents and tax clinics that request OPR to issue authorizations for special appearances to tax clinic personnel to practice before the IRS).

CATEGORIES OF RECORDS IN THE SYSTEM:

Correspondence (including, but not limited to, letters, faxes, telegrams, and emails) sent and received; mailing lists of, and responses to, quality and improvement surveys of individuals; program sponsor agreements for continuing professional education; requests for authorization to make a special appearance before the IRS; statements of isolation from representations that would create a post-employment conflict of interest; appeals from determinations of ineligibility to engage in limited practice; records pertaining to consideration of these matters; and workload management records.

AUTHORITY FOR MAINTENANCE OF THE SYSTEM:

5 U.S.C. 301, 26 U.S.C. 7801 and 7803, and 31 U.S.C. 330.

PURPOSE(S):

To permit OPR to manage correspondence, to track responses from quality and improvement surveys, to manage workloads, and to collect and maintain other administrative records that are necessary for OPR to perform its functions under the regulations governing practice before the IRS, which are set out at 31 CFR part 10 and are published in pamphlet form as Treasury Department Circular No. 230, and its functions under other grants of authority.

ROUTINE USES: OF RECORDS MAINTAINED IN THE SYSTEM, INCLUDING CATEGORIES OF USERS AND THE PURPOSES OF SUCH USES:

Disclosure of returns and return information may be made only as provided by 26 U.S.C. 6103. All other records may be used as described below if the IRS deems the purpose of the disclosure to be compatible with the purpose for which the IRS collected the records and no privilege is asserted:

(1) Disclose information to the Department of Justice (DOJ) when seeking legal advice or for use in any proceeding, or in preparation for any proceeding, when: (a) The IRS or any component thereof; (b) any IRS employee in his or her official capacity; (c) any IRS employee in his or her individual capacity if the IRS or the DOJ has agreed to provide representation for the employee; or (d) the United States is a party to, has an interest in, or is likely to be affected by, the proceeding; and the IRS determines that the information is relevant and necessary to the proceeding or advice sought.

(2) Disclose information in a proceeding (including discovery) before a court, administrative tribunal, or other adjudicative body when: (a) The IRS or any component thereof; (b) any IRS employee in his or her official capacity; (c) any IRS employee in his or her individual capacity if the DOJ has agreed to provide representation for the employee; or (d) the United States is a party to, has an interest in, or is likely to be affected by, the proceeding; and the IRS or the DOJ determines that the information is relevant and necessary to the proceeding. Information may be disclosed to the adjudicative body to resolve issues of relevancy, necessity, or privilege pertaining to the information.

(3) Disclose information to a Federal, state, local, tribal, or foreign agency, or other public authority, which has requested information relevant or necessary to hiring or retaining an employee or to issuing, or continuing, a contract, security clearance, license, grant, or other benefit.

(4) Disclose information to a Federal, state, local, tribal, or foreign agency or other public authority responsible for implementing or enforcing, or for investigating or prosecuting, the violation of a statute, rule, regulation, order, or license when a record on its face, or in conjunction with other records, indicates a violation or potential violation of law or regulation and the information disclosed is relevant to any regulatory, enforcement, investigative, or prosecutorial responsibility of the receiving authority.

(5) Disclose information to a contractor to the extent necessary to perform the contract.

(6) Disclose information to appropriate agencies, entities, and persons when: (a) The IRS suspects or has confirmed that the security or confidentiality of information in the system of records has been compromised; (b) the IRS has determined that as a result of the suspected or confirmed compromise there is a risk of harm to economic or property interests, identity theft or fraud, or harm to the security or integrity of this system or other systems or programs (whether maintained by the IRS or another agency or entity) that rely upon the compromised information; and (c) the disclosure made to such agencies, entities, and persons is reasonably necessary to assist in connection with the IRS' efforts to respond to the suspected or confirmed compromise and prevent, minimize, or remedy such harm.

POLICIES AND PRACTICES FOR STORING, RETRIEVING, ACCESSING, RETAINING, AND DISPOSING OF RECORDS IN THE SYSTEM:

STORAGE:

Paper records and electronic media.

RETRIEVABILITY:

By individual's name. Non-unique names will be distinguished by addresses.

SAFEGUARDS:

Access controls are not less than those published in IRM 10.8, Information Technology (IT) Security, and IRM 10.2, Physical Security Program.

RETENTION AND DISPOSAL:

Records are retained in accordance with IRM 1.15, Records Management (also see Documents 12829 and 12990).

SYSTEM MANAGER(S) AND ADDRESS:

Director, Office of Professional Responsibility, SE:OPR, 1111 Constitution Avenue NW., Washington, DC 20224.

NOTIFICATION PROCEDURE:

Individuals seeking to determine if this system of records contains a record pertaining to themselves may inquire in accordance with instructions appearing at 31 CFR part 1, subpart C, Appendix B. Inquiries should be addressed as in ''Record Access Procedures'' below.

RECORD ACCESS PROCEDURES:

Individuals seeking access to any record contained in this system, or seeking to contest its content, may inquire in accordance with instructions appearing at 31 CFR part 1, subpart C, Appendix B. Inquiries should be addressed to the Disclosure Office for Privacy Act requests listed in the IRS Appendix below.

CONTESTING RECORD PROCEDURES:

See ''Record Access Procedures'' above.

RECORD SOURCE CATEGORIES:

Individuals, other correspondents, and Treasury Department records.

EXEMPTIONS CLAIMED FOR THE SYSTEM:

None.

Treasury/IRS 37.007

SYSTEM NAME:

Practitioner Disciplinary Records—Treasury/IRS.

SYSTEM LOCATION:

Office of Professional Responsibility (OPR), Internal Revenue Service (IRS), Washington, DC; Martinsburg, West Virginia; and Memphis, Tennessee.

CATEGORIES OF INDIVIDUALS COVERED BY THE SYSTEM:

Subjects and potential subjects of disciplinary proceedings relating to attorneys, certified public accountants, enrolled agents, enrolled actuaries, enrolled retirement plan agents, appraisers, registered tax return preparers, and any individual who for compensation prepares or assists with the preparation of all or substantially all of a tax return, claim for refund, or other document pertaining to any taxpayer's liability for submission to the IRS; subjects or potential subjects of actions to deny eligibility to engage in limited practice before the IRS or actions to withdraw eligibility to practice before the IRS in any other capacity; individuals who have received disciplinary sanctions or whose eligibility to practice before the IRS has been denied or withdrawn; and individuals who have submitted to OPR information concerning potential violations of 31 CFR part 10.

CATEGORIES OF RECORDS IN THE SYSTEM:

Information sent to, or collected by, OPR concerning potential violations of 31 CFR part 10, including disciplinary decisions and orders (and related records) of Federal or state courts, agencies, bodies, and other licensing authorities; records pertaining to OPR's investigation and evaluation of such information; records of disciplinary proceedings brought by OPR before administrative law judges, including records of appeals from decisions in such proceedings; petitions for reinstatement to practice before the IRS (and related records); Federal court orders enjoining individuals from representing taxpayers before the IRS; and press releases concerning such injunctions.

AUTHORITY FOR MAINTENANCE OF THE SYSTEM:

5 U.S.C. 301, 26 U.S.C. 7801 and 7803, and 31 U.S.C. 330.

PURPOSE(S):

To enforce and administer the regulations governing practice before the IRS, which are set out at 31 CFR part 10 and are published in pamphlet form as Treasury Department Circular No. 230; to make available to the general public information about disciplinary proceedings and disciplinary sanctions; to assist public, quasi-public, or private professional authorities, agencies, organizations, and associations and other law enforcement and regulatory authorities in the performance of their duties in connection with the administration and maintenance of standards of integrity, conduct, and discipline; and to assist state tax agencies in their efforts to ensure compliance with ethical rules and standards of conduct by individuals authorized to practice or individuals who seek permission to practice before the agency.

ROUTINE USES: OF RECORDS MAINTAINED IN THE SYSTEM, INCLUDING CATEGORIES OF USERS AND THE PURPOSES OF SUCH USES:

Disclosure of returns and return information may be made only as provided by 26 U.S.C. 6103. All other records may be used as described below if the IRS deems the purpose of the disclosure to be compatible with the purpose for which the IRS collected the records and no privilege is asserted:

(1) Disclose information to the Department of Justice (DOJ) when seeking legal advice or for use in any proceeding, or in preparation for any proceeding, when: (a) The IRS or any component thereof; (b) any IRS employee in his or her official capacity; (c) any IRS employee in his or her individual capacity if the IRS or the DOJ has agreed to provide representation for the employee; or (d) the United States is a party to, has an interest in, or is likely to be affected by, the proceeding; and the IRS determines that the information is relevant and necessary to the proceeding or advice sought.

(2) Disclose information in a proceeding (including discovery) before a court, administrative tribunal, or other adjudicative body when: (a) The IRS or any component thereof; (b) any IRS employee in his or her official capacity; (c) any IRS employee in his or her individual capacity if the IRS or the DOJ has agreed to provide representation for the employee; or (d) the United States is a party to, has an interest in, or is likely to be affected by, the proceeding; and the IRS or the DOJ determines that the information is relevant and necessary to the proceeding. Information may be disclosed to the adjudicative body to resolve issues of relevancy, necessity, or privilege pertaining to the information.

(3) Disclose information to a Federal, state, local, tribal, or foreign agency, or other public authority, which has requested information relevant or necessary to hiring or retaining an employee or to issuing, or continuing, a contract, security clearance, license, grant, or other benefit.

(4) Disclose information to a Federal, state, local, tribal, or foreign agency or other public authority responsible for implementing or enforcing, or for investigating or prosecuting, the violation of a statute, rule, regulation, order, or license when a record on its face, or in conjunction with other records, indicates a violation or potential violation of law or regulation and the information disclosed is relevant to any regulatory, enforcement,

investigative, or prosecutorial responsibility of the receiving authority.

(5) Disclose information to a contractor to the extent necessary to perform the contract.

(6) Disclose information to third parties during the course of an investigation to the extent deemed necessary by the IRS to obtain information pertinent to the investigation.

(7) Subject to the protective measures in 31 CFR part 10, make available for public inspection or otherwise disclose to the general public reports and decisions of the Secretary of the Treasury, or his delegate, in disciplinary proceedings, including any reports and decisions of the administrative law judge.

(8) Make available for public inspection or otherwise disclose to the general public, after the final agency decision has been issued or after OPR has taken final action: (a) The name, mailing address, professional designation (attorney, certified public accountant, enrolled agent, enrolled actuary, enrolled retirement plan agent, or appraiser), type of disciplinary sanction, effective dates, and information about the conduct that gave rise to the sanction pertaining to individuals who have been censured, individuals who have been suspended or disbarred from practice before the IRS, individuals who have resigned as an enrolled agent or an enrolled retirement plan agent in lieu of a disciplinary proceeding being instituted or continued, individuals upon whom a monetary penalty has been imposed, and individual appraisers who have been disqualified; and (b) the name, mailing address, representative capacity (family member; general partner; full-time employee or officer of a corporation, association, or organized group; full-time employee of a trust, receivership, guardianship, or estate; officer or regular employee of a government unit; an individual representing a taxpayer outside the United States; or unenrolled return preparer), the fact of the denial of eligibility for limited practice, effective dates, and information about the conduct that gave rise to the denial pertaining to individuals who have been denied eligibility to engage in limited practice before the IRS pursuant to 31 CFR part 10.

(9) Make available for public inspection or otherwise disclose to the general public: The name, mailing address, professional designation or representative capacity, the fact of being enjoined from representing taxpayers before the IRS, the scope of the injunction, effective dates, and information about the conduct that gave rise to the injunction pertaining to individuals who have been enjoined by any Federal court from representing taxpayers before the IRS.

(10) Disclose information to a public, quasi-public, or private professional authority, agency, organization, or association, which individuals covered by this system of records may be licensed by, subject to the jurisdiction of, a member of, or affiliated with, including but not limited to state bars and certified public accountancy boards, to assist such authorities, agencies, organizations, or associations in meeting their responsibilities in connection with the administration and maintenance of standards of integrity, conduct, and discipline.

(11) Disclose upon written request to a member of the public who has submitted to OPR written information concerning potential violations of the regulations governing practice before the IRS: (a) That OPR is currently investigating or evaluating the information; (b) that OPR has determined that no action will be taken, because jurisdiction is lacking, because a disciplinary proceeding would be time-barred, or because the information does not constitute actionable violations of the regulations; (c) that OPR has determined that the reported conduct does not warrant a censure, suspension, or disbarment; and (d) if applicable, the name of the authority, agency, organization, or association or Department of the Treasury or IRS office to which OPR has referred the information.

(12) Disclose to the Office of Personnel Management the identity and status of disciplinary cases in order for the Office of Personnel Management to process requests for assignment of administrative law judges employed by other Federal agencies to conduct disciplinary proceedings.

(13) Disclose information to a state tax agency for tax administration purposes, including the agency's efforts to ensure compliance with ethical rules and standards of conduct by individuals authorized to practice or individuals who seek permission to practice before the agency.

(14) Disclose information to appropriate agencies, entities, and persons when: (a) The IRS suspects or has confirmed that the security or confidentiality of information in the system of records has been compromised; (b) the IRS has determined that as a result of the suspected or confirmed compromise there is a risk of harm to economic or property interests, identity theft or fraud, or harm to the security or integrity of this system or other systems or programs (whether maintained by the IRS or another agency or entity) that rely upon the compromised information; and (c) the disclosure made to such agencies, entities, and persons is reasonably necessary to assist in connection with the IRS' efforts to respond to the suspected or confirmed compromise and prevent, minimize, or remedy such harm.

POLICIES AND PRACTICES FOR STORING, RETRIEVING, ACCESSING, RETAINING, AND DISPOSING OF RECORDS IN THE SYSTEM:

STORAGE:

Paper records and electronic media.

RETRIEVABILITY:

By individual's name, Social Security Number (SSN) (where available), or complaint number pertaining to a disciplinary proceeding. Non-unique names will be distinguished by addresses.

SAFEGUARDS:

Access controls are not less than those published in IRM 10.8, Information Technology (IT) Security, and IRM 10.2, Physical Security Program.

RETENTION AND DISPOSAL:

Records are retained in accordance IRM 1.15, Records Management (also see Documents 12829 and 12990).

SYSTEM MANAGER(S) AND ADDRESS:

Director, Office of Professional Responsibility, SE: OPR, 1111 Constitution Avenue NW., Washington, DC 20224.

NOTIFICATION PROCEDURE:

This system of records may not be accessed for purposes of determining whether the system contains a record pertaining to a particular individual; the records are exempt under 5 U.S.C. 552a(k)(2).

RECORD ACCESS PROCEDURES:

This system may not be accessed for purposes of inspection or in order to contest the content of records; the records are exempt under 5 U.S.C. 552a(k)(2).

CONTESTING RECORD PROCEDURES:

26 U.S.C. 7852(e) prohibits Privacy Act amendment of tax records. Other records are exempt from contest as stated in ''Records Access Procedures'' above.

RECORD SOURCE CATEGORIES:

Individuals covered by this system of records; witnesses; Federal or state

courts, agencies, or bodies; professional authorities, agencies, organizations, or associations; state tax agencies; Treasury Department records; and public records.

EXEMPTIONS CLAIMED FOR THE SYSTEM:

Pursuant to section (k)(2) of the Privacy Act, 5 U.S.C. 552a(k)(2), the records contained within this system are exempt from the following sections of the Act: (c)(3), (d), (e)(1), (e)(4)(G), (e)(4)(H), (e)(4)(I), and (f). (See 31 CFR 1.36.)

Treasury/IRS 37.009

SYSTEM NAME:

Enrolled Agent and Enrolled Retirement Plan Agent Records —Treasury/IRS.

SYSTEM LOCATION:

Return Preparer Office (RPO), Internal Revenue Service (IRS), Washington, DC; Detroit Computing Center, Detroit, Michigan; Martinsburg, West Virginia, and Memphis, Tennessee.

CATEGORIES OF INDIVIDUALS COVERED BY THE SYSTEM:

Individuals currently or formerly enrolled to practice before the IRS; applicants for enrollment to practice before the IRS, including those who have appealed denial of applications for enrollment; and candidates for enrollment examinations.

CATEGORIES OF RECORDS IN THE SYSTEM:

Applications for enrollment to practice before the IRS; records pertaining to RPO's investigation and evaluation of eligibility for enrollment; appeals from denials of applications for enrollment (and related records); records relating to enrollment examinations, including candidate applications, answer sheets, and examination scores; applications for renewal of enrollment, including information on continuing professional education; and administrative records pertaining to enrollment status, including current status, dates of enrollment, dates of renewal, and dates of resignation or termination.

AUTHORITY FOR MAINTENANCE OF THE SYSTEM:

5 U.S.C. 301, 26 U.S.C. 7801 and 7803, and 31 U.S.C. 330.

PURPOSE(S):

To administer the enrollment program under the regulations governing practice before the IRS, which are set out at 31 CFR part 10 and are published in pamphlet form as Treasury Department Circular No. 230; to make available to the general public sufficient information to assist taxpayers in locating enrolled individuals and in accurately verifying individuals' enrollment status; to assist public, quasi-public, or private professional authorities, agencies, organizations, and associations and other law enforcement and regulatory authorities in the performance of their duties in connection with the administration and maintenance of standards of integrity, conduct, and discipline; and to assist state tax agencies in their efforts to ensure compliance with ethical rules and standards of conduct by individuals authorized to practice or individuals who seek permission to practice before the agency.

ROUTINE USES: OF RECORDS MAINTAINED IN THE SYSTEM, INCLUDING CATEGORIES OF USERS AND THE PURPOSES OF SUCH USES:

Disclosure of returns and return information may be made only as provided by 26 U.S.C. 6103. All other records may be used as described below if the IRS deems the purpose of the disclosure to be compatible with the purpose for which the IRS collected the records and no privilege is asserted:

(1) Disclose information to the Department of Justice (DOJ when seeking legal advice or for use in any proceeding, or in preparation for any proceeding, when: (a) The IRS or any component thereof; (b) any IRS employee in his or her official capacity; (c) any IRS employee in his or her individual capacity if the IRS or the DOJ has agreed to provide representation for the employee; or (d) the United States is a party to, has an interest in, or is likely to be affected by, the proceeding; and the IRS determines that the information is relevant and necessary to the proceeding or advice sought.

(2) Disclose information in a proceeding (including discovery) before a court, administrative tribunal, or other adjudicative body when: (a) The IRS or any component thereof; (b) any IRS employee in his or her official capacity; (c) any IRS employee in his or her individual capacity if the IRS or the DOJ has agreed to provide representation for the employee; or (d) the United States is a party to, has an interest in, or is likely to be affected by, the proceeding; and the IRS or the DOJ determines that the information is relevant and necessary to the proceeding. Information may be disclosed to the adjudicative body to resolve issues of relevancy, necessity, or privilege pertaining to the information.

(3) Disclose information to a Federal, state, local, tribal, or foreign agency, or other public authority, which has requested information relevant or necessary to hiring or retaining an employee or to issuing, or continuing, a contract, security clearance, license, grant, or other benefit.

(4) Disclose information to a Federal, state, local, tribal, or foreign agency or other public authority responsible for implementing or enforcing, or for investigating or prosecuting, the violation of a statute, rule, regulation, order, or license when a record on its face, or in conjunction with other records, indicates a violation or potential violation of law or regulation and the information disclosed is relevant to any regulatory, enforcement, investigative, or prosecutorial responsibility of the receiving authority.

(5) Disclose information to a contractor to the extent necessary to perform the contract.

(6) Disclose information to third parties during the course of an investigation to the extent deemed necessary by the IRS to obtain information pertinent to the investigation.

(7) Make available for public inspection or otherwise disclose to the general public the name, enrollment number, and enrollment status (active, inactive, inactive retired, terminated for failure to meet the requirements for renewal of enrollment, or resigned for reasons other than in lieu of a disciplinary proceeding being instituted or continued, including effective dates), as well as the mailing address, company or firm name, telephone number, fax number, email address, and Web site address, pertaining to individuals who are, or were, enrolled to practice before the IRS.

(8) Disclose information to a public, quasi-public, or private professional authority, agency, organization, or association, which individuals covered by this system of records may be licensed by, subject to the jurisdiction of, a member of, or affiliated with, including but not limited to state bars and certified public accountancy boards, to assist such authorities, agencies, organizations, or associations in meeting their responsibilities in connection with the administration and maintenance of standards of integrity, conduct, and discipline.

(9) Disclose information to a state tax agency for tax administration purposes, including the agency's efforts to ensure compliance with ethical rules and standards of conduct by individuals authorized to practice or individuals who seek permission to practice before the agency.

(10) Disclose information to appropriate agencies, entities, and persons when: (a) The IRS suspects or has confirmed that the security or confidentiality of information in the

system of records has been compromised; (b) the IRS has determined that as a result of the suspected or confirmed compromise there is a risk of harm to economic or property interests, identity theft or fraud, or harm to the security or integrity of this system or other systems or programs (whether maintained by the IRS or another agency or entity) that rely upon the compromised information; and (c) the disclosure made to such agencies, entities, and persons is reasonably necessary to assist in connection with the IRS' efforts to respond to the suspected or confirmed compromise and prevent, minimize, or remedy such harm.

POLICIES AND PRACTICES FOR STORING, RETRIEVING, ACCESSING, RETAINING, AND DISPOSING OF RECORDS IN THE SYSTEM:

STORAGE:

Paper records and electronic media.

RETRIEVABILITY:

By individual's name (including other names used), Social Security Number (SSN) (where available), enrollment examination candidate number, enrollment application control number, enrollment number, or street address. Non-unique names will be distinguished by addresses.

SAFEGUARDS:

Access controls are not less than those published in IRM 10.8, Information Technology (IT) Security, and IRM 10.2, Physical Security Program.

RETENTION AND DISPOSAL:

Records are retained in accordance with IRM 1.15, Records Management (also see Documents 12820 and 12990).

SYSTEM MANAGER(S) AND ADDRESS:

Director, Return Preparer Office. See IRS Appendix below for address.

NOTIFICATION PROCEDURE:

This system may not be accessed for purposes of determining whether the system contains a record pertaining to a particular individual; the records are exempt under 5 U.S.C. 552a(k)(2).

RECORD ACCESS PROCEDURES:

This system may not be accessed for purposes of inspection or in order to contest the content of records; the records are exempt under 5 U.S.C. 552a(k)(2).

CONTESTING RECORD PROCEDURES:

26 U.S.C. 7852(e) prohibits Privacy Act amendment of tax records. Other records are exempt from contest as stated in ''Record Access Procedures'' above.

RECORD SOURCE CATEGORIES:

Individuals covered by this system of records; witnesses; Federal or state courts, agencies, or bodies; professional authorities, agencies, organizations, or associations; state tax agencies; Treasury Department records; and public records.

EXEMPTIONS CLAIMED FOR THE SYSTEM:

Pursuant to section (k)(2) of the Privacy Act, 5 U.S.C. 552a(k)(2), the records contained within this system are exempt from the following sections of the Act: (c)(3), (d), (e)(1), (e)(4)(G), (e)(4)(H), (e)(4)(I), and (f). (See 31 CFR 1.36.)

Treasury/IRS 37.111

SYSTEM NAME:

Preparer Tax Identification Number (PTIN) Records—Treasury/IRS.

SYSTEM LOCATION:

National Office, Field Offices, Campuses, and Computing Centers. (See IRS Appendix below for addresses.)

CATEGORIES OF INDIVIDUALS COVERED BY THE SYSTEM:

Applicants for a PTIN; registered paid tax return preparers (individuals issued a PTIN); individuals whose application or registration is rejected, revoked, or suspended. Individual providers of continuing education for paid tax return preparers, including applicants for IRS approval, approved providers, and former providers. Individual contractors who assist the IRS in reviewing continuing education provider applications. Individuals who communicate with the IRS regarding the paid tax return preparer registration program or about any specific paid tax return preparer or continuing education provider.

CATEGORIES OF RECORDS IN THE SYSTEM:

Administrative records pertaining to paid tax return preparers, including records pertaining to applications for registration, renewal of registration, revocations, suspensions, and appeals; records pertaining to IRS investigation and evaluation of eligibility for registration; records relating to proof of identity for applicants who do not have Social Security Numbers; records related to competency testing, including applications, answer sheets, and test scores; records related to background, fingerprint, and tax compliance checks; records on continuing education requirements to become a registered paid tax return preparer; and information related to testing and education exemptions due to supervised status and types of returns prepared. Records pertaining to individual providers of continuing education for paid tax return preparers, including applications for IRS approval of courses or programs, grants and denials of such applications, and records of participation in offered courses and programs. Records pertaining to individual contractors who assist IRS in reviewing continuing education provider applications. Records pertaining to received communications.

Note: Disciplinary records pertaining to registered paid tax return preparers are maintained in Treasury/IRS 37.007, Practitioner Disciplinary Records.

AUTHORITY FOR MAINTENANCE OF THE SYSTEM:

5 U.S.C. 301; 26 U.S.C. 7801 and 7803; 31 U.S.C. 330.

PURPOSE(S):

To administer records pertaining to the issuance of PTINs to registered paid tax return preparers.

ROUTINE USES: OF RECORDS MAINTAINED IN THE SYSTEM INCLUDING CATEGORIES OF USERS AND PURPOSES OF SUCH USES:

Returns and return information may be disclosed only as authorized by 26 U.S.C. 6103. Material covered by rule 6(e) of the Federal Rules of Criminal Procedure may be disclosed only as permitted by that rule. All other records may be used as described below if the IRS deems that the purpose of the disclosure is compatible with the purpose for which IRS collected the records, and no privilege is asserted.

(1) Disclose information to the Department of Justice (DOJ) when seeking legal advice or for use in any proceeding, or in preparation for any proceeding, when: (a) The IRS or any component thereof; (b) any IRS employee in his or her official capacity; (c) any IRS employee in his or her individual capacity if the IRS or DOJ has agreed to provide representation for the employee; or (d) the United States is a party to, has an interest in, or is likely to be affected by, the proceeding and the IRS determines that the records are relevant and necessary to the proceeding or advice sought.

(2) Disclose information in a proceeding (including discovery) before a court, administrative tribunal, or other adjudicative body when: (a) The IRS or any component thereof; (b) any IRS employee in his or her official capacity; (c) any IRS employee in his or her personal capacity if the IRS or DOJ has agreed to provide representation for the employee; or (d) the United States is a party to, has an interest in, or is likely to be affected by, the proceeding and the IRS or DOJ determines that the information is relevant and necessary to

the proceeding. Information may be disclosed to the adjudicative body to resolve issues of relevancy, necessity, or privilege pertaining to the information.

(3) Disclose information to an arbitrator, mediator, or other neutral, in the context of alternative dispute resolution, to the extent relevant and necessary for resolution of the matters presented, including asserted privileges. Information may also be disclosed to the parties in the alternative dispute resolution proceeding.

(4) Disclose to a Federal, state, local, or tribal agency, or other public authority, which has requested information relevant or necessary to hiring or retaining an employee, or issuing or continuing a contract, security clearance, license, grant, or other benefit.

(5) Disclose pertinent information to an appropriate Federal, state, local, or tribal agency, or other public authority, responsible for implementing or enforcing, or for investigating or prosecuting the violation of, a statute, rule, regulation, order, or license, when a record on its face, or in conjunction with other records, indicates a potential violation of law or regulation and the information disclosed is relevant to any regulatory, enforcement, investigative, or prosecutorial responsibility of the receiving authority.

(6) Disclose information to foreign governments in accordance with international agreements.

(7) Disclose information to third parties during the course of an investigation to the extent necessary to obtain information pertinent to the investigation.

(8) Make available for public inspection or otherwise disclose to the general public, after the final agency decision has been issued or after OPR has taken final action: (a) The name, mailing address, professional designation (attorney, certified public accountant, enrolled agent, enrolled actuary, enrolled retirement plan agent appraiser, registered tax return preparer, or any individual who for compensation prepares or assists with the preparation of all or substantially all of a tax return, claim for refund, or other document pertaining to any taxpayer's liability for submission to the IRS), type of disciplinary sanction, effective dates, and information about the conduct that gave rise to the sanction pertaining to individuals who have been censured, individuals who have been suspended or disbarred from practice before the IRS, individuals who have resigned as an enrolled agent, an enrolled retirement plan agent, or a registered tax return preparer in lieu of a disciplinary proceeding being instituted or continued, individuals upon whom a monetary penalty has been imposed, and individual appraisers who have been disqualified; and (b) the name, mailing address, representative capacity (family member; general partner; full-time employee of officer of a corporation, association, or organized group; full-time employee of a trust, receivership, guardianship, ore state; officer or regular employee of a government unit; an individual representing a taxpayer outside the United States; or unenrolled return preparer), the fact of the denial of eligibility for limited practice, effective dates, and information about the conduct that gave rise to the denial pertaining to individuals who have been denied edibility to engage in limited practice before the IRS pursuant to 31 CFR part 10.

(9) To the extent consistent with the American Bar Association's Model Rules of Professional Conduct, Rule 4.2, disclose to a person the fact that his chosen legal representative may not be authorized to represent him before the IRS.

(10) Disclose information to a contractor, including an expert witness or a consultant, hired by the IRS, to the extent necessary for the performance of a contract.

(11) Disclose information to a supervised tax return preparer sufficient to identify the supervising tax return preparer, and information to a supervising tax return preparer sufficient to identify the tax return preparers who have named that individual as their supervisor.

(12) Disclose information to a contractor's financial institution to the extent necessary for the processing of PTIN application and registration fee payments.

(13) Disclose information to a former employee of the IRS to the extent necessary for personnel-related or other official purposes when the IRS requires information and/or consultation assistance from the former employee regarding a matter within that person's former area of responsibility.

(14) Disclose information to the public sufficient to identify individuals who have registered with the IRS as a paid tax return preparer and been issued a PTIN, and to advise the public when such an individual is removed from the program.

(15) Disclose information to the public sufficient to identify individual providers of continuing education for paid tax return preparers, including contact information.

(16) Disclose information to appropriate agencies, entities, and persons when: (a) The IRS suspects or has confirmed that the security or confidentiality of information in the system of records has been compromised; (b) the IRS has determined that as a result of the suspected or confirmed compromise there is a risk of harm to economic or property interests, identity theft or fraud, or harm to the security or integrity of this system or other systems or programs (whether maintained by the IRS or another agency or entity) that rely upon the compromised information; and (c) the disclosure made to such agencies, entities, and persons is reasonably necessary to assist in connection with IRS efforts to respond to the suspected or confirmed compromise and prevent, minimize, or remedy such harm.

POLICIES AND PRACTICES FOR STORING, RETRIEVING, ACCESSING, RETAINING AND DISPOSING OF RECORDS IN THE SYSTEM:

STORAGE:

Paper and electronic media.

RETRIEVABILITY:

Records pertaining to paid tax return preparers may be retrieved by the preparer's PTIN, name, Taxpayer Identification Number (Social Security Number or Employer Identification Number), or application number. Records pertaining to individual continuing education providers may be retrieved by provider name, Taxpayer Identification Number, application number, or course or program number. Records pertaining to contractors may be retrieved by contractor name or Taxpayer Identification Number, or by contract number. Records pertaining to communications with individuals regarding the paid tax return preparer registration program may be retrieved by the name of the individual or the name or other identifying information of a paid tax return preparer or a continuing education provider identified in the communication. Records may also be retrieved by IRS employee identification number for the employee assigned to the case, project, or determination.

SAFEGUARDS:

Access controls are not less than those published in IRM 10.8, Information Technology (IT) Security, and IRM 10.2, Physical Security Program.

RETENTION AND DISPOSAL:

Record retention will be established in accordance with the National Archives and Records Administration Regulations Part 1228, Subpart B—Scheduling Records.

SYSTEM MANAGER(S) AND ADDRESS:

Director, Return Preparer Office. See IRS Appendix below for address.

NOTIFICATION PROCEDURE:

Individuals seeking notification and access to any record contained in this system of records, or seeking to contest its content, may inquire in writing in accordance with instructions appearing at 31 CFR, Part 1, Appendix B. Inquiries should be addressed as in ''Record Access Procedures'' below. This system of records contains records that are exempt from the notification, access and contest requirements pursuant to 5 U.S.C. 552a(k)(2).

RECORD ACCESS PROCEDURES:

See ''Notification Procedure'' above.

CONTESTING RECORDS PROCEDURES:

26 U.S.C. 7852(e) prohibits Privacy Act amendment of tax records. With respect to records other than tax records, see ''Notification Procedure'' above.

RECORDS SOURCE CATEGORIES:

Applicants and registered paid tax return preparers; Treasury and other Federal agency records; state and municipal government agencies; contractors; continuing education providers; witnesses; professional organizations; publicly available records such as real estate records and news media.

EXEMPTIONS CLAIMED FOR THE SYSTEM:

Some of the records in this system are exempt from sections (c)(3), (d)(1)–(4), (e)(1), (e)(4)(G)–(I), and (f) of the Privacy Act, pursuant to 5 U.S.C. 552a(k)(2). (See 31 CFR 1.36)

Treasury/IRS 42.001

SYSTEM NAME:

Examination Administrative Files—Treasury/IRS.

SYSTEM LOCATION:

National Office, field, computing center, and campus offices. (See the IRS Appendix below for address.)

CATEGORIES OF INDIVIDUALS COVERED BY THE SYSTEM:

Taxpayers who are being considered for examination, or who are, or were, examined to determine an income, estate and gift, excise, or employment tax liability.

CATEGORIES OF RECORDS IN THE SYSTEM:

Investigatory materials required in making a tax determination or other verification in the administration of tax laws and all other sub-files related to the processing of the tax case. This system also includes other management information related to a case and used for tax administration purposes, including classification and scheduling records.

AUTHORITY FOR MAINTENANCE OF THE SYSTEM:

5 U.S.C. 301 and 26 U.S.C. 7801.

PURPOSE:

To document the examinations of tax returns or other determinations as to a taxpayer's tax liability; to document determinations whether or not to examine a taxpayer; and to analyze trends in taxpayer compliance.

ROUTINE USES: OF RECORDS MAINTAINED IN THE SYSTEM, INCLUDING CATEGORIES OF USES AND THE PURPOSES OF SUCH USES:

Disclosure of returns and return information may be made only as provided by 26 U.S.C. 6103. All other records may be used as described below if the IRS deems that the purpose of the disclosure is compatible with the purpose for which IRS collected the records, and no privilege is asserted.

To appropriate agencies, entities, and persons when: (a) The IRS suspects or has confirmed that the security or confidentiality of information in the system of records has been compromised; (b) the IRS has determined that as a result of the suspected or confirmed compromise there is a risk of harm to economic or property interests, identity theft or fraud, or harm to the security or integrity of this system or other systems or programs (whether maintained by the IRS or another agency or entity) that rely upon the compromised information; and (c) the disclosure made to such agencies, entities, and persons is reasonably necessary to assist in connection with IRS efforts to respond to the suspected or confirmed compromise and prevent, minimize, or remedy such harm.

POLICIES AND PRACTICES FOR STORING, RETRIEVING, ACCESSING, RETAINING, AND DISPOSING OF RECORDS IN THE SYSTEM:

STORAGE:

Paper records and electronic media.

RETRIEVABILITY:

By taxpayer's name, Taxpayer Identification Number (TIN) (*e.g.,* Social Security Number (SSN), Employer Identification Number (EIN), or similar number assigned by the IRS), and document locator number (DLN).

SAFEGUARDS:

Access controls are not less than those published in IRM 10.8, Information Technology (IT) Security, and IRM 10.2, Physical Security Program.

RETENTION AND DISPOSAL:

Records are maintained in accordance with IRM 1.15, Records Management.

SYSTEM MANAGER(S) AND ADDRESS:

Division Commissioners, W&I, SB/SE., TE/GE, and LB&I. (See the IRS Appendix below for address.)

NOTIFICATION PROCEDURE:

This system may not be accessed for purposes of determining whether the system contains a record pertaining to a particular individual; the records are exempt under 5 U.S.C. 552a(k)(2).

RECORD ACCESS PROCEDURES:

This system may not be accessed for purposes of inspection or in order to contest the content of records; the records are exempt under 5 U.S.C. 552a(k)(2).

CONTESTING RECORD PROCEDURES:

26 U.S.C. 7852(e) prohibits Privacy Act amendment of tax records.

RECORD SOURCE CATEGORIES:

Taxpayers' returns, books and records; informants and other third party witnesses; city and state governments; other Federal agencies; examinations of other taxpayers; and taxpayers' representatives.

EXEMPTIONS CLAIMED FOR THE SYSTEM:

This system is exempt from 5 U.S.C. 552a(c)(3), (d)(1)–(4), (e)(1), (e)(4)(G)–(I) and (f) of the Privacy Act pursuant to 5 U.S.C. 552a(k)(2). (See 31 CFR 1.36).

Treasury/IRS 42.002

SYSTEM NAME:

Excise Compliance Programs—Treasury/IRS.

SYSTEM LOCATION:

SB/SE (Excise Program) area and campus offices. (See the IRS Appendix below for address.)

CATEGORIES OF INDIVIDUALS COVERED BY THE SYSTEM:

These records include information about individuals engaged in any taxable activity related to excise taxes; the filing, preparing, or transmitting of Federal excise taxes; or witnesses or other parties with knowledge of such taxable activity.

CATEGORIES OF RECORDS IN THE SYSTEM:

These records include information about individuals who are the subject of excise tax compliance programs administered by the IRS, including records pertaining to witnesses or other parties with knowledge of such taxable activity.

AUTHORITY FOR MAINTENANCE OF THE SYSTEM:

5 U.S.C. 301 and 26 U.S.C. 7801.

PURPOSE:

These records are used to administer the Federal Excise Compliance Program.

ROUTINE USES: OF RECORDS MAINTAINED IN THE SYSTEM, INCLUDING CATEGORIES OF USERS AND THE PURPOSE OF SUCH USE:

Disclosure of return and return information may be made only as provided by 26 U.S.C. 6103. Material covered by rule 6(e) of the Federal Rules of Criminal Procedure may be disclosed only as permitted by that rule. All other records may be used as described below if the IRS deems that the purpose of the disclosure is compatible with the purpose for which IRS collected the records, and no privilege is asserted.

To appropriate agencies, entities, and persons when: (a) The IRS suspects or has confirmed that the security or confidentiality of information in the system of records has been compromised; (b) the IRS has determined that as a result of the suspected or confirmed compromise there is a risk of harm to economic or property interests, identity theft or fraud, or harm to the security or integrity of this system or other systems or programs (whether maintained by the IRS or another agency or entity) that rely upon the compromised information; and (c) the disclosure made to such agencies, entities, and persons is reasonably necessary to assist in connection with IRS efforts to respond to the suspected or confirmed compromise and prevent, minimize, or remedy such harm.

POLICIES AND PRACTICES FOR STORING, RETRIEVING, ACCESSING, RETAINING, AND DISPOSING OF RECORDS IN THE SYSTEM:

STORAGE:

Paper records and electronic media.

RETRIEVABILITY:

Records are retrievable by taxpayer name and Taxpayer Identification Number (TIN) (*e.g.*, Social Security Number (SSN), Employer Identification Number (EIN), or similar number assigned by IRS), or document locator number (DLN).

SAFEGUARDS:

Access controls are not less than those published in IRM 10.8, Information Technology (IT) Security, and IRM 10.2, Physical Security Program.

RETENTION AND DISPOSAL:

Records are maintained in accordance with IRM 1.15, Records Management (also see Documents 12829 and 12990).

SYSTEM MANAGER(S) AND ADDRESS:

Division Commissioner SB/SE (Excise Program), (See the IRS Appendix below for address.)

NOTIFICATION PROCEDURE:

This system may not be accessed for purposes of determining whether the system contains a record pertaining to a particular individual; the records are exempt under 5 U.S.C. 552a(k)(2).

RECORD ACCESS PROCEDURES:

This system may not be accessed for purposes of inspection or in order to contest the content of records; the records are exempt under 5 U.S.C. 552a(k)(2).

CONTESTING RECORD PROCEDURES:

26 U.S.C. 7852(e) prohibits Privacy Act amendment of tax records. Other records are exempt from contest as stated in ''Record Access Procedures'' above.

RECORD SOURCE CATEGORIES:

Filed IRS Forms 720, 720–TO/CS, 637, 2290, 8849; Customs Form 7501, Entry Summary; dyed diesel fuel inspections; individuals engaged in any activity related to excise taxes, or the filing, preparing, or transmitting of excise taxes; witnesses or other parties with knowledge of such activity.

EXEMPTIONS CLAIMED FOR THE SYSTEM:

Records maintained in this system have been designated as exempt from 5 U.S.C. 552a(c)(3), (d)(1), (2), (3), and (4), (e)(1), (e)(4)(G), (H), and (I), and (f) of the Privacy Act pursuant to 5 U.S.C. 552a(k)(2). (See 31 CFR 1.36).

TREASURY/IRS 42.005

SYSTEM NAME:

Whistleblower Office Records—Treasury/IRS.

SYSTEM LOCATION:

Whistleblower Office, Washington, DC, and Ogden Campus, Ogden, Utah.

CATEGORIES OF INDIVIDUALS COVERED BY THE SYSTEM:

These records include information about individuals who submit allegations of possible tax noncompliance and claims for award to the Whistleblower Office (''claimants''), claimants' representatives, and the taxpayers and third parties about whom the information is received, which is pertinent to a claim for award.

CATEGORIES OF RECORDS IN THE SYSTEM:

These records include claimant identity information, allegation information received, claims or award (including supporting information or documentation), information pertaining to any civil or criminal investigation initiated, or expanded, as a result of the allegations received by the Whistleblower Office, any other information pertinent to the Whistleblower Office's determination as to the amount, if any, of any award for which the claimant may be eligible under 26 U.S.C. 7623, including information pertaining to appeals of award determinations to the Tax Court (including the results of such appeals).

AUTHORITY FOR MAINTENANCE OF THE SYSTEM:

26 U.S.C. 7623 and 7801, and 5 U.S.C. 301.

PURPOSE(S):

The records in this system will be used to administer the claimant award program under 26 U.S.C. 7623.

ROUTINE USES: OF RECORDS MAINTAINED IN THE SYSTEM INCLUDING CATEGORIES OF USERS AND PURPOSES OF SUCH USES:

Disclosure of returns and return information may be made only as provided by 26 U.S.C. 6103.

To the extent authorized by 26 U.S.C. 6103, disclosure may also be made to appropriate agencies, entities, and persons when: (1) The IRS suspects or has confirmed that the security or confidentiality of information in the system of records has been compromised; (2) the IRS has determined that as a result of the suspected or confirmed compromise there is a risk of harm to economic or property interests, identity theft or fraud, or harm to the security or integrity of this system or other systems or programs (whether maintained by the IRS or another agency or entity) that rely upon the compromised information; and (3) the disclosure made to such agencies, entities, and persons is reasonably necessary to assist in connection with IRS efforts to respond to the suspected or confirmed compromise and prevent, minimize, or remedy such harm.

POLICIES AND PRACTICES FOR STORING, RETRIEVING, ACCESSING, RETAINING AND DISPOSING OF RECORDS IN THE SYSTEM:

STORAGE:

Paper records and electronic media.

RETRIEVABILITY:

Data is retrieved by the name or Taxpayer Identification Number (TIN) of the claimant(s), of the taxpayer(s) who are the subject(s) of the allegation(s), or of third parties identified in the records; the name or Centralized Authorization File (CAF) number of the claimant's representative; or an award claim number assigned by the Whistleblower Office.

SAFEGUARDS:

Access controls are not less than those published in IRM 10.8, Information

Technology (IT) Security, and IRM 10.2, Physical Security Program.

RETENTION AND DISPOSAL:

Records are maintained in accordance with IRM 1.15, Records Management (also see Documents 12829 and 12990).

SYSTEM MANAGER(S) AND ADDRESS:

Director, Whistleblower Office, SE: WO, 1111 Constitution Avenue NW., Washington, DC 20224.

NOTIFICATION PROCEDURE:

This system may not be accessed for purposes of determining whether the system contains a record pertaining to a particular individual; the records are exempt under 5 U.S.C. 552a(k)(2).

RECORD ACCESS PROCEDURES:

This system may not be accessed for purposes of inspection or to contest the content of records; the records are exempt under 5 U.S.C. 552a(k)(2).

CONTESTING RECORDS PROCEDURES:

26 U.S.C. 7852(e) prohibits Privacy Act amendment of tax records.

RECORDS SOURCE CATEGORIES:

Claimants and their representatives; Department of the Treasury employees and records; newspapers, court records, and other publicly available information.

EXEMPTIONS CLAIMED FOR THE SYSTEM:

This system has been designated as exempt from sections (c)(3), (d)(1)–(4), (e)(1), (e)(4)(G)–(I), and (f) of the Privacy Act pursuant to 5 U.S.C. 552a(k)(2). See 31 CFR 1.36.

Treasury/IRS 42.008

SYSTEM NAME:

Audit Information Management System (AIMS)—Treasury/IRS.

SYSTEM LOCATION:

National Office, field, and campus offices. (See the IRS Appendix below for address.)

CATEGORIES OF INDIVIDUALS COVERED BY THE SYSTEM:

Taxpayers whose tax returns are under the jurisdiction of examiners in W&I, SB/SE., TE/GE and LB&I

CATEGORIES OF RECORDS IN THE SYSTEM:

Name, address, and Taxpayer Identification Number (TIN) (*e.g.,* Social Security Number (SSN), Employer Identification Number (EIN), or other similar number assigned by the IRS) of taxpayers; information from the Master Files (IRS 24.030 and 24.046) and a code identifying taxpayers that threatened or assaulted IRS employees.

AUTHORITY FOR MAINTENANCE OF THE SYSTEM:

5 U.S.C. 301 and 26 U.S.C. 7801.

PURPOSE:

To maintain information about returns in inventory and closed returns.

ROUTINE USES: OF RECORDS MAINTAINED IN THE SYSTEM, INCLUDING CATEGORIES OF USERS AND THE PURPOSES OF SUCH USES:

Disclosure of returns and return information may be made only as provided by 26 U.S.C. 6103. All other records may be used as described below if the IRS deems that the purpose of the disclosure is compatible with the purpose for which IRS collected the records, and no privilege is asserted.

To appropriate agencies, entities, and persons when: (a) The IRS suspects or has confirmed that the security or confidentiality of information in the system of records has been compromised; (b) the IRS has determined that as a result of the suspected or confirmed compromise there is a risk of harm to economic or property interests, identity theft or fraud, or harm to the security or integrity of this system or other systems or programs (whether maintained by the IRS or another agency or entity) that rely upon the compromised information; and (c) the disclosure made to such agencies, entities, and persons is reasonably necessary to assist in connection with IRS efforts to respond to the suspected or confirmed compromise and prevent, minimize, or remedy such harm.

POLICIES AND PRACTICES FOR STORING, RETRIEVING, ACCESSING, RETAINING,

AND DISPOSING OF RECORDS IN THE SYSTEM:

STORAGE:

Paper records and electronic media.

RETRIEVABILITY:

By taxpayer name and TIN.

SAFEGUARDS:

Access controls are not less than those published in IRM 10.8, Information Technology (IT) Security, and IRM 10.2, Physical Security Program.

RETENTION AND DISPOSAL:

Records are maintained in accordance with IRM 1.15, Records Management (also see Documents 12829 and 1220).

SYSTEM MANAGER AND ADDRESS:

Division Commissioners, W&I, SB/SE., TE/GE and LB&I. (See the IRS Appendix below for address.)

NOTIFICATION PROCEDURE:

This system may not be accessed for purposes of determining whether the system contains a record pertaining to a particular individual; the records are exempt under 5 U.S.C. 552a(k)(2).

RECORD ACCESS PROCEDURES:

This system may not be accessed for purposes of inspection or in order to contest the content of records; the records are exempt under 5 U.S.C. 552a(k)(2).

CONTESTING RECORD PROCEDURES:

26 U.S.C. 7852(e) prohibits Privacy Act amendment of tax records.

RECORD SOURCE CATEGORIES:

Tax returns and examination files.

EXEMPTIONS CLAIMED FOR THE SYSTEM:

This system is exempt from 5 U.S.C. 552a(c)(3), (d)(1)–(4), (e)(1), (e)(4)(G)–(I) and (f) of the Privacy Act pursuant to 5 U.S.C. 552a(k)(2). (See 31 CFR 1.36).

Treasury/IRS 42.017

SYSTEM NAME:

International Enforcement Program Information Files—Treasury/IRS.

SYSTEM LOCATION:

Division Commissioner, LB&I (See the IRS Appendix below for address.)

CATEGORIES OF INDIVIDUALS COVERED BY THE SYSTEM:

Any individual having foreign business or financial activities.

CATEGORIES OF RECORDS IN THE SYSTEM:

Listing of individual taxpayers, Taxpayer Identification Number (TIN) (*e.g.,* Social Security Number (SSN), Employer Identification Number (EIN), or similar number assigned by IRS), summary of income expenses, financial information as to foreign operations or financial transactions, acquisition of foreign stock, controlling interest of a foreign corporation, organization or reorganization of foreign corporation examination results, information concerning potential tax liability, records pertaining to Advanced Pricing Agreements and mutual agreements.

AUTHORITY FOR MAINTENANCE OF THE SYSTEM:

5 U.S.C. 301 and 26 U.S.C. 7801.

PURPOSE:

To monitor the International Enforcement Program.

ROUTINE USES: OF RECORDS MAINTAINED IN THE SYSTEM, INCLUDING CATEGORIES OF USERS AND THE PURPOSES OF SUCH USES:

Disclosure of returns and return information may be made only as provided by 26 U.S.C. 6103. Disclosure of tax convention information may be made only as provided by 26 U.S.C. 6105. All other records may be used as

described below if the IRS deems that the purpose of the disclosure is compatible with the purpose for which IRS collected the records, and no privilege is asserted.

To appropriate agencies, entities, and persons when: (a) The IRS suspects or has confirmed that the security or confidentiality of information in the system of records has been compromised; (b) the IRS has determined that as a result of the suspected or confirmed compromise there is a risk of harm to economic or property interests, identity theft or fraud, or harm to the security or integrity of this system or other systems or programs (whether maintained by the IRS or another agency or entity) that rely upon the compromised information; and (c) the disclosure made to such agencies, entities, and persons is reasonably necessary to assist in connection with IRS efforts to respond to the suspected or confirmed compromise and prevent, minimize, or remedy such harm.

POLICIES AND PRACTICES FOR STORING, RETRIEVING, ACCESSING, RETAINING, AND DISPOSING OF RECORDS IN THE SYSTEM:

STORAGE:

Paper records and electronic media.

RETRIEVABILITY:

By taxpayer name and Taxpayer Identification Number (TIN).

SYSTEM MANAGER(S) AND ADDRESS:

Division Commissioner, LB&I. (See the IRS Appendix below for address.)

NOTIFICATION PROCEDURE:

This system may not be accessed for purposes of determining whether the system contains a record pertaining to a particular individual; the records are exempt under 5 U.S.C. 552a(k)(2).

RECORD ACCESS PROCEDURES:

This system may not be accessed for purposes of inspection or in order to contest the content of records; the records are exempt under 5 U.S.C. 552a(k)(2).

CONTESTING RECORD PROCEDURES:

26 U.S.C. 7852(e) prohibits Privacy Act amendment of tax records.

RECORD SOURCE CATEGORIES:

Tax convention and treaty partners; individual's tax returns; examinations of other taxpayers; and public sources of information.

EXEMPTIONS CLAIMED FOR THE SYSTEM:

This system is exempt from 5 U.S.C. 552a(c)(3), (d)(1)–(4),(e)(1), (e)(4)(G)–(I) and (f) of the Privacy Act pursuant to 5 U.S.C. 552a(k)(2). (See 31 CFR 1.36).

Treasury/IRS 42.021

SYSTEM NAME:

Compliance Programs and Projects Files—Treasury/IRS.

SYSTEM LOCATION:

National Office, field, and campus offices. (See the IRS Appendix below for address.)

CATEGORIES OF INDIVIDUALS COVERED BY THE SYSTEM:

Individuals who may be involved in tax evasion schemes or noncompliance schemes, including but not limited to withholding noncompliance or other areas of noncompliance grouped by industry, occupation, or financial transactions; individuals who may be selling or promoting abusive tax schemes or abusive tax avoidance transactions; individuals who may be in noncompliance with tax laws concerning tax exempt organizations, return preparers, corporate kickbacks, or questionable Forms W–4, tax evasion schemes involving identity theft, among others.

CATEGORIES OF RECORDS IN THE SYSTEM:

Records pertaining to individuals in compliance projects and programs, and records used to consider individuals for selection in these compliance projects and programs.

AUTHORITY FOR MAINTENANCE OF THE SYSTEM:

5 U.S.C. 301 and 26 U.S.C. 7801.

PURPOSE:

To track information relating to special programs and projects to identify non-compliance schemes and to select individuals involved in such schemes for enforcement actions.

ROUTINE USES: OF RECORDS MAINTAINED IN THE SYSTEM, INCLUDING CATEGORIES OF USERS AND THE PURPOSES OF SUCH USES:

Disclosure of returns and return information may be made only as provided by 26 U.S.C. 6103. Material covered by rule 6(e) of the Federal Rules of Criminal Procedure may be disclosed only as permitted by that rule. All other records may be used as described below if the IRS deems that the purpose of the disclosure is compatible with the purpose for which IRS collected the records, and no privilege is asserted.

To appropriate agencies, entities, and persons when: (a) The IRS suspects or has confirmed that the security or confidentiality of information in the system of records has been compromised; (b) the IRS has determined that as a result of the suspected or confirmed compromise there is a risk of harm to economic or property interests, identity theft or fraud, or harm to the security or integrity of this system or other systems or programs (whether maintained by the IRS or another agency or entity) that rely upon the compromised information; and (c) the disclosure made to such agencies, entities, and persons is reasonably necessary to assist in connection with IRS efforts to respond to the suspected or confirmed compromise and prevent, minimize, or remedy such harm.

POLICIES AND PRACTICES FOR STORING, RETRIEVING, ACCESSING, RETAINING, AND DISPOSING OF RECORDS IN THE SYSTEM:

STORAGE:

Paper records and electronic media.

RETRIEVABILITY:

By taxpayer name and Taxpayer Identification Number (TIN) (*e.g.,* Social Security Number (SSN), Employer Identification Number (EIN), or other similar number assigned by the IRS), or document locator number (DLN).

SAFEGUARDS:

Access controls are not less than those published in IRM 10.8, Information Technology (IT) Security, and IRM 10.2, Physical Security Program.

RETENTION AND DISPOSAL:

Records are maintained in accordance with IRM 1.15, Records Management (also see Documents 12829 and 12990).

SYSTEM MANAGER AND ADDRESS:

Division Commissioners, W&I, SB/SE. TE/GE, and LB&I. (See the IRS Appendix below for address.)

NOTIFICATION PROCEDURE:

This system may not be accessed for purposes of determining whether the system contains a record pertaining to a particular individual; the records are exempt under 5 U.S.C. 552a(k)(2).

RECORD ACCESS PROCEDURES:

This system may not be accessed for purposes of inspection or in order to contest the content of records; the records are exempt under 5 U.S.C. 552a(k)(2).

CONTESTING RECORD PROCEDURES:

26 U.S.C. 7852(e) prohibits Privacy Act amendment of tax records.

RECORD SOURCE CATEGORIES:

This system of records contains investigatory material compiled for law enforcement purposes whose sources need not be reported.

EXEMPTIONS CLAIMED FOR THE SYSTEM:

This system is exempt from 5 U.S.C. 552a(c)(3), (d)(1)–(4), (e)(1), (e)(4)(G)–(I)

and (f) of the Privacy Act pursuant to 5 U.S.C. 552a(k)(2). (See 31 CFR 1.36).

Treasury/IRS 42.027

SYSTEM NAME:

Data on Taxpayers' Filings on Foreign Holdings—Treasury/IRS.

SYSTEM LOCATION:

Division Commissioner, LB&I. (See the IRS Appendix below for address.)

CATEGORIES OF INDIVIDUALS COVERED BY THE SYSTEM:

Individuals who file Form 5471, Information Return with respect to a Foreign Corporation.

CATEGORIES OF RECORDS IN THE SYSTEM:

Names of individuals who file Form 5471.

AUTHORITY FOR MAINTENANCE OF THE SYSTEM:

5 U.S.C. 301 and 26 U.S.C. 7801.

PURPOSE:

To monitor individuals who file Form 5471, Controlled Foreign Corporation.

ROUTINE USES: OF RECORDS MAINTAINED IN THE SYSTEM, INCLUDING CATEGORIES OF USERS AND THE PURPOSES OF SUCH USES:

Disclosure of returns and return information may be made only as provided by 26 U.S.C. 6103. All other records may be used as described below if the IRS deems that the purpose of the disclosure is compatible with the purpose for which IRS collected the records, and no privilege is asserted.

To appropriate agencies, entities, and persons when: (a) The IRS suspects or has confirmed that the security or confidentiality of information in the system of records has been compromised; (b) the IRS has determined that as a result of the suspected or confirmed compromise there is a risk of harm to economic or property interests, identity theft or fraud, or harm to the security or integrity of this system or other systems or programs (whether maintained by the IRS or another agency or entity) that rely upon the compromised information; and (c) the disclosure made to such agencies, entities, and persons is reasonably necessary to assist in connection with IRS efforts to respond to the suspected or confirmed compromise and prevent, minimize, or remedy such harm.

POLICIES AND PRACTICES FOR STORING, RETRIEVING, ACCESSING, RETAINING, AND DISPOSING OF RECORDS IN THE SYSTEM:

STORAGE:

Paper records and electronic media.

RETRIEVABILITY:

By taxpayer name and Taxpayer Identification Number (TIN) (*e.g.,* Social Security Number (SSN), Employer Identification Number (EIN), or similar number assigned by the IRS).

SAFEGUARDS:

Access controls are not less than those published in IRM 10.8, Information Technology (IT) Security, and IRM 10.2, Physical Security Program.

RETENTION AND DISPOSAL:

Records are maintained in accordance with IRM 1.15, Records Management (also see Documents 12829 and 12990).

SYSTEM MANAGER AND ADDRESS:

Division Commissioner, LB&I. (See the IRS Appendix below for address.)

NOTIFICATION PROCEDURE:

Individuals seeking to determine if this system of records contains a record pertaining to themselves may inquire in accordance with instructions appearing at 31 CFR part 1, subpart C, appendix B. Inquiries should be addressed as in ''Record Access Procedures'' below.

RECORD ACCESS PROCEDURES:

Individuals seeking access to any record contained in this system of records, or seeking to contest its content, may inquire in accordance with instructions appearing at 31 CFR part 1, subpart C, appendix B. Inquiries should be addressed to the Disclosure Office for Privacy Act requests listed in the IRS Appendix below.

CONTESTING RECORD PROCEDURES:

26 U.S.C. 7852(e) prohibits Privacy Act amendment of tax records.

RECORD SOURCE CATEGORIES:

Form 5471.

EXEMPTIONS CLAIMED FOR THE SYSTEM:

None.

Treasury/IRS 42.031

SYSTEM NAME:

Anti-Money Laundering/Bank Secrecy Act (BSA) and Form 8300 Records—Treasury/IRS.

SYSTEM LOCATION:

Computing Center and field offices. (See the IRS Appendix below for address.)

CATEGORIES OF INDIVIDUALS COVERED BY THE SYSTEM:

Individuals subject to the reporting and recordkeeping requirements of the BSA, including:

(1) Individuals whose businesses provide any of the financial services which subject them to the reporting, recordkeeping or registration requirements of the laws commonly known as the Bank Secrecy Act (BSA), or the related reporting and recordkeeping requirements of 26 U.S.C. 6050I.

(2) Individuals acting as employees, owners or customers of such institutions or involved, directly or indirectly, in any transaction with such institutions. Examples of institutions that offer financial services are: Currency dealers, check cashiers, money order or traveler's check issuers, sellers, or redeemers, casinos, card clubs, and other money transmitters.

(3) Individuals who are required to file reports or maintain records required under the Bank Secrecy Act, such as the Report of Foreign Bank and Financial Accounts and related records.

(4) Persons who may be witnesses or may otherwise provide information concerning these individuals.

CATEGORIES OF RECORDS IN THE SYSTEM:

Records relate to the administration of the IRS anti-money laundering program including the registration, reporting and recordkeeping requirements of the BSA and 26 U.S.C. 6050I. They may also relate to individuals who, based upon certain tolerances, exhibit patterns of financial transactions suggesting noncompliance with the registration, reporting and recordkeeping requirements of the BSA and 26 U.S.C. 6050I. Records may also relate to individuals who are required to file reports or maintain records required under the Bank Secrecy Act, such as the Report of Foreign Bank and Financial Accounts and related records. Records may also relate to IRS administrative actions, such as notification, educational or other outreach efforts, examination results, and civil or criminal referrals.

AUTHORITY FOR MAINTENANCE OF THE SYSTEM:

5 U.S.C. 301, 31 U.S.C. 5311–5332, 26 U.S.C. 6050I, and 7801.

PURPOSE:

To administer 26 U.S.C. 6050I and the Bank Secrecy Act.

ROUTINE USES: OF RECORDS MAINTAINED IN THE SYSTEM, INCLUDING CATEGORIES OF USERS AND THE PURPOSES OF SUCH USE:

Disclosure of returns and return information may be made only as provided by 26 U.S.C. 6103. Material covered by rule 6(e) of the Federal Rules of Criminal Procedure may be disclosed only as permitted by that rule. All other records may be used as described below if the IRS deems that the purpose of the disclosure is compatible with the

purpose for which IRS collected the records, and no privilege is asserted.

(1) Disclose information to the Department of Justice (DOJ) when seeking legal advice or for use in any proceeding, or in preparation for any proceeding, when: (a) The IRS or any component thereof; (b) any IRS employee in his or her official capacity; (c) any IRS employee in his or her individual capacity if the IRS or DOJ has agreed to provide representation for the employee; or (d) the United States is a party to, has an interest in, or is likely to be affected by, the proceeding and the IRS determines that the records are relevant and necessary to the proceeding or advice sought.

(2) Disclose information in a proceeding (including discovery) before a court, administrative tribunal, or other adjudicative body when: (a) The IRS or any component thereof; (b) any IRS employee in his or her official capacity; (c) any IRS employee in his or her personal capacity if the IRS or DOJ has agreed to provide representation for the employee; or (d) the United States is a party to, has an interest in, or is likely to be affected by, the proceeding and the IRS or DOJ determines that the information is relevant and necessary to the proceeding. Information may be disclosed to the adjudicative body to resolve issues of relevancy, necessity, or privilege pertaining to the information.

(3) Disclose information to a Federal, state, local, or tribal agency, or other public authority, which has requested information relevant or necessary to hiring or retaining an employee, or issuing or continuing a contract, security clearance, license, grant, or other benefit.

(4) Disclose information to appropriate Federal, state, local or foreign agencies responsible for investigating or prosecuting the violations of or for enforcing or implementing a statute, rule, regulation, order, or license, where the Service becomes aware of an indication of a potential violation of civil or criminal law or regulation, or the use is required in the conduct of intelligence or counter-intelligence activities, including analysis, to protect against international terrorism.

(5) Disclose information to third parties during the course of an investigation to the extent necessary to obtain information pertinent to the investigation.

(6) Disclose information to the news media as described in the IRS Policy Statement P–1–183, News Coverage to Advance Deterrent Value of Enforcement Activities Encouraged, IRM 1.2.1.2.41.

(7) Disclose information to any agency, including any State financial institutions supervisory agency, United States intelligence agency or self-regulatory organization registered with the Securities and Exchange Commission or the Commodity Futures Trading Commission, upon written request of the head of the agency or organization. The records shall be available for a purpose that is consistent with title 31, as required by 31 U.S.C. 5319.

(8) Disclose information to representatives of the National Archives and Records Administration (NARA) who are conducting records management inspections under authority of 44 U.S.C. 2904 and 2906.

(9) To appropriate agencies, entities, and persons when: (a) The IRS suspects or has confirmed that the security or confidentiality of information in the system of records has been compromised; (b) the IRS has determined that as a result of the suspected or confirmed compromise there is a risk of harm to economic or property interests, identity theft or fraud, or harm to the security or integrity of this system or other systems or programs (whether maintained by the IRS or another agency or entity) that rely upon the compromised information; and (c) the disclosure made to such agencies, entities, and persons is reasonably necessary to assist in connection with IRS efforts to respond to the suspected or confirmed compromise and prevent, minimize, or remedy such harm.

POLICIES AND PRACTICES FOR STORING, RETRIEVING, ACCESSING, RETAINING, AND DISPOSING OF RECORDS IN THIS SYSTEM:

STORAGE:

Paper records and electronic media.

RETRIEVABILITY:

Name and Taxpayer Identification Number (TIN) (*e.g.,* Social Security Number (SSN), Employer Identification Number (EIN), or similar number assigned by the IRS).

SAFEGUARDS:

Access controls are not less than those published in IRM 10.8, Information Technology (IT) Security, and IRM 10.2, Physical Security Program.

RETENTION AND DISPOSAL:

Records are maintained in accordance with IRM 1.15, Records Management (also see Documents 12829 and 12990).

SYSTEM MANAGER(S) AND ADDRESS:

Division Commissioner, SB/SE. (See the IRS Appendix below for address.)

NOTIFICATION PROCEDURE:

This system may not be accessed for purposes of determining whether the system contains a record pertaining to a particular individual; the records are exempt under 5 U.S.C. 552a(k)(2).

RECORD ACCESS PROCEDURES:

This system may not be accessed for purposes of inspection or in order to contest the content of records; the records are exempt under 5 U.S.C. 552a(k)(2).

CONTESTING RECORD PROCEDURES:

26 U.S.C. 7852(e) prohibits Privacy Act amendment of tax records. Other records are exempt from contest as stated in ''Record Access Procedures'' above.

SOURCE CATEGORIES:

The system contains material for which sources need not be reported.

EXEMPTIONS CLAIMED FOR THE SYSTEM:

This system is exempt from 5 U.S.C. 552a(c)(3), (d)(1)–(4), (e)(1), (e)(4)(G)–(I) and (f) of the Privacy Act pursuant to 5 U.S.C. 552a(k)(2). (See 31 CFR 1.36).

Treasury/IRS 42.888

SYSTEM NAME:

Qualifying Therapeutic Discovery Project Records—Treasury/IRS.

SYSTEM LOCATION:

IRS Campus, Ogden, UT.

CATEGORIES OF INDIVIDUALS COVERED BY THE SYSTEM:

Individuals who file an Application for a Qualifying Therapeutic Discovery Project credit (or grant in lieu of credit) in their individual capacity or on behalf of their sole proprietorship.

CATEGORIES OF RECORDS IN THE SYSTEM:

These records include information pertaining to the IRS's administration of the Qualifying Therapeutic Discovery Project Program. Records include, but are not limited to the application, including Form 8942 and the Project Information Memorandum, representative authorization information, and a unique administrative control identifier associated with each application for certification. The records may contain taxpayer names, Taxpayer Identification Numbers (TIN), and (Social Security Numbers (SSN).

AUTHORITY FOR MAINTENANCE OF THE SYSTEM:

5 U.S.C. 301 and 26 U.S.C. 48D and 7801. Section 9023(a) of The Patient Protection and Affordable Care Act (Pub. L. 111–148) as amended by the Health Care and Education

Reconciliation Act of 2010 (Pub. L. 111-152) [Affordable Care Act].

PURPOSE:

To administer, in consultation with the Department of Health & Human Services, a qualifying therapeutic discovery project program to consider and award certifications for qualified investments eligible for the credit (or, at the taxpayer's election, the grant) to qualifying therapeutic discovery project sponsors.

ROUTINE USES: OF RECORDS MAINTAINED IN THE SYSTEM INCLUDING CATEGORIES OF USERS AND PURPOSES OF SUCH USES:

Disclosure of returns and return information may be made only as provided by 26 U.S.C. 6103. All other records may be used as described below if the IRS deems that the purpose of the disclosure is compatible with the purpose for which IRS collected the records, and no privilege is asserted.

(1) To disclose certain information to the public regarding the amount of the grant, the identity of the person to whom the grant was made, and a description of the project with respect to which the grant was made in accordance with the intent of Congress to publicize the projects that show significant potential to produce new and cost-saving therapies, support good jobs, and increase U.S. competitiveness.

(2) Disclose information to the Department of Justice (DOJ) when seeking legal advice or for use in any proceeding, or in preparation for any proceeding, when: (a) The IRS or any component thereof; (b) any IRS employee in his or her official capacity; (c) any IRS employee in his or her individual capacity if the IRS or DOJ has agreed to provide representation for the employee; or (d) the United States is a party to, has an interest in, or is likely to be affected by, the proceeding and the IRS determines that the records are relevant and necessary to the proceeding or advice sought.

(3) Disclose information in a proceeding (including discovery) before a court, administrative tribunal, or other adjudicative body when: (a) The IRS or any component thereof; (b) any IRS employee in his or her official capacity; (c) any IRS employee in his or her personal capacity if the IRS or DOJ has agreed to provide representation for the employee; or (d) the United States is a party to, has an interest in, or is likely to be affected by, the proceeding and the IRS or DOJ determines that the information is relevant and necessary to the proceeding. Information may be disclosed to the adjudicative body to resolve issues of relevancy, necessity, or privilege pertaining to the information.

(4) Disclose information to an appropriate Federal, state, local, tribal, or foreign agency, or other public authority, responsible for implementing or enforcing, or for investigating or prosecuting the violation of a statute, rule, regulation, order, or license, when a record on its face, or in conjunction with other records, indicates a potential violation of law or regulation and the information disclosed is relevant to any regulatory, enforcement, investigative, or prosecutorial responsibility of the receiving authority.

(5) Disclose information to third parties during the course of an investigation to the extent necessary to obtain information pertinent to the investigation.

(6) Disclose information to a contractor, including an expert witness or a consultant hired by the IRS, to the extent necessary for the performance of a contract.

(7) To appropriate agencies, entities, and persons when: (a) The IRS suspects or has confirmed that the security or confidentiality of information in the system of records has been compromised; (b) the IRS has determined that as a result of the suspected or confirmed compromise there is a risk of harm to economic or property interests, identity theft or fraud, or harm to the security or integrity of this system or other systems or programs (whether maintained by the IRS or another agency or entity) that rely upon the compromised information; and (c) the disclosure made to such agencies, entities, and persons is reasonably necessary to assist in connection with IRS efforts to respond to the suspected or confirmed compromise and prevent, minimize, or remedy such harm.

(8) Disclose information to professional organizations or associations with which individuals covered by this system of records may be affiliated, such as state bar disciplinary authorities, to meet their responsibilities in connection with the administration and maintenance of standards of conduct and discipline.

POLICIES AND PRACTICES FOR STORING, RETRIEVING, ACCESSING, RETAINING AND DISPOSING OF RECORDS IN THE SYSTEM:

STORAGE:

Paper records and electronic media.

RETRIEVABILITY:

By taxpayer name and Taxpayer Identification Number (TIN) (Social Security Number (SSN), Employer Identification Number (EIN), or similar number assigned by the IRS).

SAFEGUARDS:

Access controls are not less than those published in IRM 10.8, Information Technology (IT) Security, and IRM 10.2, Physical Security Program.

RETENTION AND DISPOSAL:

Records are maintained in accordance with IRM 1.15, Records Management (also see Documents 12829 and 12990).

SYSTEM MANAGER(S) AND ADDRESS:

Division Commissioner, SB/SE., 5000 Ellin Road, New Carrollton, MD 20706.

NOTIFICATION PROCEDURE:

Individuals seeking to determine if this system of records contains a record pertaining to themselves may inquire in accordance with instructions appearing at 31 CFR part 1, subpart C, appendix B. Inquiries should be addressed as in ''Record Access Procedures'' below.

RECORD ACCESS PROCEDURES:

Individuals seeking access to any record contained in this system of records, or seeking to contest its content, may inquire in accordance with instructions appearing at 31 CFR part 1, subpart C, appendix B. Inquiries should be addressed to the Disclosure Office for Privacy Act requests listed in the IRS Appendix below. The IRS may assert 5 U.S.C. 552a(d)(5) as appropriate.

CONTESTING RECORDS PROCEDURES:

26 U.S.C. 7852(e) prohibits Privacy Act amendment of tax records. For all other records, see ''Records Access Procedures'' above.

RECORDS SOURCE CATEGORIES:

Records in this system are provided by the applicants, the Department of Health and Human Services, and the IRS taxpayer account records.

EXEMPTIONS CLAIMED FOR THE SYSTEM:

None.

Treasury/IRS 44.001

SYSTEM NAME:

Appeals Case Files—Treasury/IRS.

SYSTEM LOCATION:

National Office, campus, and field offices. (See the IRS Appendix below for address.)

CATEGORIES OF INDIVIDUALS COVERED BY THE SYSTEM:

Taxpayers who seek administrative review of IRS proposed adjustments and collection actions with which they disagree. Persons who seek administrative review of initial Freedom

of Information Act (FOIA) determinations.

CATEGORIES OF RECORDS IN THE SYSTEM:

Investigatory materials required in making a tax determination or other verification in the administration of tax laws and all other sub-files related to the processing of the tax case, including history notes and work papers required in an administrative review of an assessment or other initial tax determination, collection action, or FOIA determination. This system also includes other management information related to a case.

AUTHORITY FOR MAINTENANCE OF THE SYSTEM:

5 U.S.C. 301, 5 U.S.C. 552, and 26 U.S.C. 7801.

PURPOSE:

To document the actions taken during Appeals' administrative review of IRS proposed adjustments, collection actions, or Freedom of Information Act (FOIA) initial determinations.

ROUTINE USES: OF RECORDS MAINTAINED IN THE SYSTEM, INCLUDING CATEGORIES OF USERS AND THE PURPOSES OF SUCH USES:

Disclosure of returns and return information may be made only as provided by 26 U.S.C. 6103. All other records may be used as described below if the IRS deems that the purpose of the disclosure is compatible with the purpose for which IRS collected the records, and no privilege is asserted.

To appropriate agencies, entities, and persons when: (a) The IRS suspects or has confirmed that the security or confidentiality of information in the system of records has been compromised; (b) the IRS has determined that as a result of the suspected or confirmed compromise there is a risk of harm to economic or property interests, identity theft or fraud, or harm to the security or integrity of this system or other systems or programs (whether maintained by the IRS or another agency or entity) that rely upon the compromised information; and (c) the disclosure made to such agencies, entities, and persons is reasonably necessary to assist in connection with IRS efforts to respond to the suspected or confirmed compromise and prevent, minimize, or remedy such harm.

POLICIES AND PRACTICES FOR STORING, RETRIEVING, ACCESSING, RETAINING, AND DISPOSING OF RECORDS IN THE SYSTEM:

STORAGE:

Paper records and electronic media.

RETRIEVABILITY:

By individual's name.

SAFEGUARDS:

Access controls are not less than those published in IRM 10.8, Information Technology (IT) Security, and IRM 10.2, Physical Security Program.

RETENTION AND DISPOSAL:

Records are maintained in accordance with IRM 1.15, Records Management (also see Documents 12829 and 12990).

SYSTEM MANAGER(S) AND ADDRESS:

Chief, Appeals. (See the IRS Appendix below for address.)

NOTIFICATION PROCEDURE:

This system may not be accessed for purposes of determining whether the system contains a record pertaining to a particular individual; the records are exempt under 5 U.S.C. 552a(k)(2).

RECORD ACCESS PROCEDURES:

This system may not be accessed for purposes of inspection or in order to contest the content of records; the records are exempt under 5 U.S.C. 552a(k)(2).

CONTESTING RECORD PROCEDURES:

26 U.S.C. 7852(e) prohibits Privacy Act amendment of tax records. Other records are exempt from contest as stated in ''Record Access Procedures'' above.

RECORD SOURCE CATEGORIES:

This system of records contains investigatory material compiled for law enforcement purposes whose sources need not be reported.

EXEMPTIONS CLAIMED FOR THE SYSTEM:

This system is exempt from 5 U.S.C. 552a(c)(3), (d)(1)–(4), (e)(1), (e)(4)(G)–(I) and (f) of the Privacy Act pursuant to 5 U.S.C. 552a(k)(2). (See 31 CFR 1.36).

Treasury/IRS 44.003

SYSTEM NAME:

Appeals Centralized Data (ACD)—Treasury/IRS.

SYSTEM LOCATION:

National Office, field, and campus offices. (See the IRS Appendix below for address.)

CATEGORIES OF INDIVIDUALS COVERED BY THE SYSTEM:

Taxpayers who seek administrative review of IRS proposed adjustments and collection actions with which they disagree. Individuals who seek administrative review of initial Freedom of Information Act (FOIA) determinations.

CATEGORIES OF RECORDS IN THE SYSTEM:

Information from 24.030, 24.046, 42.001, and 44.001 systems, related internal management information, including the taxpayer's DIF Score, and a code identifying taxpayers that threatened or assaulted IRS employees. Information pertaining to FOIA cases under administrative appeal.

AUTHORITY FOR MAINTENANCE OF THE SYSTEM:

5 U.S.C. 301, 5 U.S.C. 552, and 26 U.S.C. 7801.

PURPOSE:

To track information about cases in inventory and closed cases.

ROUTINE USES: OF RECORDS MAINTAINED IN THE SYSTEM, INCLUDING CATEGORIES OF USERS AND THE PURPOSES OF SUCH USES:

Disclosure of returns and return information may be made only as provided by 26 U.S.C. 6103. All other records may be used as described below if the IRS deems that the purpose of the disclosure is compatible with the purpose for which IRS collected the records, and no privilege is asserted.

To appropriate agencies, entities, and persons when: (a) The IRS suspects or has confirmed that the security or confidentiality of information in the system of records has been compromised; (b) the IRS has determined that as a result of the suspected or confirmed compromise there is a risk of harm to economic or property interests, identity theft or fraud, or harm to the security or integrity of this system or other systems or programs (whether maintained by the IRS or another agency or entity) that rely upon the compromised information; and (c) the disclosure made to such agencies, entities, and persons is reasonably necessary to assist in connection with IRS efforts to respond to the suspected or confirmed compromise and prevent, minimize, or remedy such harm.

POLICIES AND PRACTICES FOR STORING, RETRIEVING, ACCESSING, RETAINING, AND DISPOSING OF RECORDS IN THE SYSTEM:

STORAGE:

Paper records and electronic media.

RETRIEVABILITY:

By name and Taxpayer Identification Number (TIN) (*e.g.,* Social Security Number (SSN), Employer Identification Number (EIN), or other similar number assigned by the IRS).

SAFEGUARDS:

Access controls are not less than those published in IRM 10.8, Information Technology (IT) Security, and IRM 10.2, Physical Security Program.

RETENTION AND DISPOSAL:

Records are maintained in accordance with IRM 1.15, Records Management (also see Documents 12829 and 12990).

SYSTEM MANAGER AND ADDRESS:

Chief, Appeals. (See the IRS Appendix below for address.)

NOTIFICATION PROCEDURE:

Individuals seeking to determine if this system of records contains a record pertaining to themselves may inquire in accordance with instructions appearing at 31 CFR part 1, subpart C, appendix B. Inquiries should be addressed as in ''Record Access Procedures'' below.

RECORD ACCESS PROCEDURES:

Individuals seeking access to any record contained in this system of records, or seeking to contest its content, may inquire in accordance with instructions appearing at 31 CFR part 1, subpart C, appendix B. Inquiries should be addressed to the Disclosure Office for Privacy Act requests listed in the IRS Appendix below.

CONTESTING RECORD PROCEDURES:

26 U.S.C. 7852(e) prohibits Privacy Act amendment of tax records.

RECORD SOURCE CATEGORIES:

Tax returns and other filings made by the individual and agency entries made in the administration of the individual's tax account. FOIA administrative appeals and agency entries made in the administration of the FOIA appeal. Also, time reports prepared by Appeals Officers.

EXEMPTIONS CLAIMED FOR THE SYSTEM:

None.

Treasury/IRS 44.004

SYSTEM NAME:

Art Case Files—Treasury/IRS.

SYSTEM LOCATION:

National Office (Appeals). (See the IRS Appendix below for address.)

CATEGORIES OF INDIVIDUALS COVERED BY THE SYSTEM:

Famous or noted artists whose works have been evaluated by the Commissioner's Art Panel or its staff for use in a taxpayer's case.

CATEGORIES OF RECORDS IN THE SYSTEM:

Commissioner's Art Panel or its staff decisions on values of works of art by named artists and appraisal documentation.

AUTHORITY FOR MAINTENANCE OF THE SYSTEM:

5 U.S.C. 301 and 26 U.S.C. 7801.

PURPOSE:

To establish value of art works for purposes of tax administration.

ROUTINE USES: OF RECORDS MAINTAINED IN THE SYSTEM, INCLUDING CATEGORIES OF USERS AND THE PURPOSES OF SUCH USES:

Disclosure of returns and return information may be made only as provided by 26 U.S.C. 6103.

(1) Disclose information to the Department of Justice (DOJ) when seeking legal advice or for use in any proceeding, or in preparation for any proceeding, when: (a) The IRS or any component thereof; (b) any IRS employee in his or her official capacity; (c) any IRS employee in his or her individual capacity if the IRS or DOJ has agreed to provide representation for the employee; or (d) the United States is a party to, has an interest in, or is likely to be affected by, the proceeding and the IRS determines that the records are relevant and necessary to the proceeding or advice sought.

(2) Disclose information in a proceeding (including discovery) before a court, administrative tribunal, or other adjudicative body when: (a) The IRS or any component thereof; (b) any IRS employee in his or her official capacity; (c) any IRS employee in his or her personal capacity if the IRS or DOJ has agreed to provide representation for the employee; or (d) the United States is a party to, has an interest in, or is likely to be affected by, the proceeding and the IRS or DOJ determines that the information is relevant and necessary to the proceeding. Information may be disclosed to the adjudicative body to resolve issues of relevancy, necessity, or privilege pertaining to the information.

(3) Disclose information to a Federal, state, local, or tribal agency, or other public authority, which has requested information relevant or necessary to hiring or retaining an employee, or issuing or continuing a contract, security clearance, license, grant, or other benefit.

(4) Disclose information to an appropriate Federal, state, local, tribal, or foreign agency, or other public authority, responsible for implementing or enforcing, or for investigating or prosecuting the violation of, a statute, rule, regulation, order, or license, when a record on its face, or in conjunction with other records, indicates a potential violation of law or regulation and the information disclosed is relevant to any regulatory, enforcement, investigative, or prosecutorial responsibility of the receiving authority.

(5) Disclose information to third parties during the course of an investigation to the extent necessary to obtain information pertinent to the investigation.

(6) Disclose information to officials of labor organizations recognized under 5 U.S.C. Chapter 71 when relevant and necessary to their duties of exclusive representation.

(7) Disclose information to the news media as described in the IRS Policy Statement P–1–183, News Coverage to Advance Deterrent Value of Enforcement Activities Encouraged, IRM 1.2.1.2.41.

(8) Disclose information to foreign governments in accordance with international agreements.

(9) To appropriate agencies, entities, and persons when: (a) The IRS suspects or has confirmed that the security or confidentiality of information in the system of records has been compromised; (b) the IRS has determined that as a result of the suspected or confirmed compromise there is a risk of harm to economic or property interests, identity theft or fraud, or harm to the security or integrity of this system or other systems or programs (whether maintained by the IRS or another agency or entity) that rely upon the compromised information; and (c) the disclosure made to such agencies, entities, and persons is reasonably necessary to assist in connection with IRS efforts to respond to the suspected or confirmed compromise and prevent, minimize, or remedy such harm.

POLICIES AND PRACTICES FOR STORING, RETRIEVING, ACCESSING, RETAINING, AND DISPOSING OF RECORDS IN THE SYSTEM:

STORAGE:

Paper records and electronic media.

RETRIEVABILITY:

By taxpayer, artist, and appraiser name.

SAFEGUARDS:

Access controls are not less than those published in IRM 10.8, Information Technology (IT) Security, and IRM 10.2, Physical Security Program.

RETENTION AND DISPOSAL:

Records are maintained in accordance with IRM 1.15, Records Management (also see Documents 12829 and 12990).

SYSTEM MANAGER AND ADDRESS:

Chief, Appeals. (See the IRS Appendix below for address.)

NOTIFICATION PROCEDURE:

Individuals seeking to determine if this system of records contains a record pertaining to themselves may inquire in accordance with instructions appearing at 31 CFR part 1, subpart C, appendix

B. Inquiries should be addressed as in ''Record Access Procedures'' below.

RECORD ACCESS PROCEDURES:

Individuals seeking access to any record contained in this system of records, or seeking to contest its content, may inquire in accordance with instructions appearing at 31 CFR part 1, subpart C, appendix B. Inquiries should be addressed to the Disclosure Office for Privacy Act requests listed in the IRS Appendix below.

CONTESTING RECORD PROCEDURES:

26 U.S.C. 7852(e) prohibits Privacy Act amendment of tax records.

RECORD SOURCE CATEGORIES:

Commissioner's Art panel and staff decisions and appraisal documentation.

EXEMPTIONS CLAIMED FOR THE SYSTEM:

None.

Treasury/IRS 44.005

SYSTEM NAME:

Expert Witness and Fee Appraiser Files—Treasury/IRS.

SYSTEM LOCATION:

National Office, field and campus offices. (See the IRS Appendix below for address.)

CATEGORIES OF INDIVIDUALS COVERED BY THE SYSTEM:

Expert witnesses for litigation and appraisers, including Art Advisory Panelists whose services may be or are used.

CATEGORIES OF RECORDS IN THE SYSTEM:

Biographical data, application letters, or list of expert/appraiser names by specialty.

AUTHORITY FOR MAINTENANCE OF THE SYSTEM:

5 U.S.C. 301 and 26 U.S.C. 7801.

PURPOSE:

To track individuals available for expert witness and appraisal services.

ROUTINE USES: OF RECORDS MAINTAINED IN THE SYSTEM, INCLUDING CATEGORIES OF USERS AND THE PURPOSES OF SUCH USES:

Records may be used as described below if the IRS deems that the purpose of the disclosure is compatible with the purpose for which IRS collected the records, and no privilege is asserted.

(1) Disclose information to the Department of Justice (DOJ) when seeking legal advice or for use in any proceeding, or in preparation for any proceeding, when: (a) The IRS or any component thereof; (b) any IRS employee in his or her official capacity; (c) any IRS employee in his or her individual capacity if the IRS or DOJ has agreed to provide representation for the employee; or (d) the United States is a party to, has an interest in, or is likely to be affected by, the proceeding and the IRS determines that the records are relevant and necessary to the proceeding or advice sought.

(2) Disclose information in a proceeding (including discovery) before a court, administrative tribunal, or other adjudicative body when: (a) The IRS or any component thereof; (b) any IRS employee in his or her official capacity; (c) any IRS employee in his or her personal capacity if the IRS or DOJ has agreed to provide representation for the employee; or (d) the United States is a party to, has an interest in, or is likely to be affected by, the proceeding and the IRS or DOJ determines that the information is relevant and necessary to the proceeding. Information may be disclosed to the adjudicative body to resolve issues of relevancy, necessity, or privilege pertaining to the information.

(3) Disclose information to a Federal, state, local, or tribal agency, or other public authority, which has requested information relevant or necessary to hiring or retaining an employee, or issuing or continuing a contract, security clearance, license, grant, or other benefit.

(4) Disclose information to an appropriate Federal, state, local, tribal, or foreign agency, or other public authority, responsible for implementing or enforcing, or for investigating or prosecuting the violation of, a statute, rule, regulation, order, or license, when a record on its face, or in conjunction with other records, indicates a potential violation of law or regulation and the information disclosed is relevant to any regulatory, enforcement, investigative, or prosecutorial responsibility of the receiving authority.

(5) Disclose information to third parties during the course of an investigation to the extent necessary to obtain information pertinent to the investigation.

(6) Disclose information to officials of labor organizations recognized under 5 U.S.C. Chapter 71 when relevant and necessary to their duties of exclusive representation.

(7) Disclose information to the news media as described in the IRS Policy Statement P–1–183, News Coverage to Advance Deterrent Value of Enforcement Activities Encouraged, IRM 1.2.1.2.41.

(8) Disclose information to foreign governments in accordance with international agreements.

(9) To appropriate agencies, entities, and persons when: (a) The IRS suspects or has confirmed that the security or confidentiality of information in the system of records has been compromised; (b) the IRS has determined that as a result of the suspected or confirmed compromise there is a risk of harm to economic or property interests, identity theft or fraud, or harm to the security or integrity of this system or other systems or programs (whether maintained by the IRS or another agency or entity) that rely upon the compromised information; and (c) the disclosure made to such agencies, entities, and persons is reasonably necessary to assist in connection with IRS efforts to respond to the suspected or confirmed compromise and prevent, minimize, or remedy such harm.

POLICIES AND PRACTICES FOR STORING, RETRIEVING, ACCESSING, RETAINING, AND DISPOSING OF RECORDS IN THE SYSTEM:

STORAGE:

Paper records and electronic media.

RETRIEVABILITY:

Expert witness or appraiser name.

SAFEGUARDS:

Access controls are not less than those published in IRM 10.8, Information Technology (IT) Security, and IRM 10.2, Physical Security Program.

RETENTION AND DISPOSAL:

Records are maintained in accordance with IRM 1.15, Records Management (also see Documents 12829 and 12990).

SYSTEM MANAGER AND ADDRESS:

Chief, Appeals. (See the IRS Appendix below for address.)

NOTIFICATION PROCEDURE:

Individuals seeking to determine if this system of records contains a record pertaining to themselves may inquire in accordance with instructions appearing at 31 CFR part 1, subpart C, appendix B. Inquiries should be addressed as in ''Record Access Procedures'' below.

RECORD ACCESS PROCEDURES:

Individuals seeking access to any record contained in this system of records, or seeking to contest its content, may inquire in accordance with instructions appearing at 31 CFR part 1, subpart C, appendix B. Inquiries should be addressed to the Disclosure Office for Privacy Act requests listed in the IRS Appendix below.

CONTESTING RECORD PROCEDURES:

See ''Records Access Procedure'' above.

RECORD SOURCE CATEGORIES:

Expert witnesses, appraisers, or public sources.

EXEMPTIONS CLAIMED FOR THE SYSTEM:

None.

Treasury/IRS 46.002

SYSTEM NAME:

Criminal Investigation Management Information System (CIMIS) and Case Files—Treasury/IRS.

SYSTEM LOCATION:

National Office (Criminal Investigation), field, campus, and computing center offices. (See the IRS Appendix below for address.)

CATEGORIES OF INDIVIDUALS COVERED BY THE SYSTEM:

Subjects and potential subjects of Criminal Investigation (CI) investigations and other individuals of interest to CI, such as witnesses and associates of subjects or potential subjects of CI investigations; individuals about whom CI has received information alleging their commission of, or involvement with, a violation of Federal laws with IRS jurisdiction, including individuals who may be victims of identity theft or other fraudulent refund or tax schemes; individuals identified as potentially posing a threat to the Commissioner, other Agency officials, or visiting dignitaries, or as having inappropriately contacted the Commissioner or other Agency officials; IRS employees assigned to work matters handled by CI.

CATEGORIES OF RECORDS IN THE SYSTEM:

Records pertaining to possible violations of laws under the enforcement jurisdiction of the IRS, received by the IRS from other sources or developed during investigative activities, that identify or may identify criminal or civil nonconformance with Federal tax laws and other Federal laws delegated to CI for investigation or enforcement; information arising from investigative activities conducted by CI in conjunction with other Federal, state, local, or foreign law enforcement, regulatory, or intelligence agencies; personal, identification, criminal history, and other information, including information sources, pertaining to individuals identified as person(s) of interest by Special Agents assigned to the Dignitary Protection Detail; personnel and workload management information. Records include biographical, travel, communication, financial, and surveillance information.

AUTHORITY FOR MAINTENANCE OF THE SYSTEM:

5 U.S.C. 301, 31 U.S.C. 5311–5332, 26 U.S.C. 7801, and Department of the Treasury Delegation Orders and Directives authorizing CI to conduct investigations into specified non-tax crimes.

PURPOSE:

To maintain, analyze, and process sensitive investigative information that identifies or may identify criminal noncompliance with Federal tax laws and other Federal laws delegated to CI for investigation or enforcement, and that identifies or may identify the individuals connected to such activity. To establish linkages between identity theft and refund or other tax fraud schemes, and the individuals involved in such schemes, that may be used to further investigate such activity and to perfect filters that identify fraudulent returns upon filing and to facilitate tax account adjustments for taxpayer victimized by these schemes.

ROUTINE USES: OF RECORDS MAINTAINED IN THE SYSTEM, INCLUDING CATEGORIES OF USERS AND THE PURPOSES OF SUCH USES:

Disclosure of returns and return information may be made only as provided by 26 U.S.C. 6103. Material covered by rule 6(e) of the Federal Rules of Criminal Procedure may be disclosed only as permitted by that rule. Disclosure of information covered by 31 U.S.C. 5311, *et seq.* or 12 U.S.C. 1951, *et seq.* (Bank Secrecy Act) may be made only as provided by Title 31, U.S.C., and Treasury guidelines. Other records may be used as described below if the IRS deems that the purpose of the disclosure is compatible with the purpose for which the IRS collected the records and no privilege is asserted.

(1) Disclose information to the Department of Justice (DOJ) when seeking legal advice, or for use in any proceeding, or in preparation for any proceeding, when: (a) The IRS or any component thereof; (b) any IRS employee in his or her official capacity; (c) any IRS employee in his or her individual capacity if the IRS or the DOJ has agreed to provide representation for the employee; or (d) the United States is a party to, has an interest in, or is likely to be affected by the proceeding, and the IRS determines that the records are relevant and useful.

(2) Disclose information in a proceeding (including discovery) before a court, administrative tribunal, or other adjudicative body when: (a) The IRS or any component thereof: (b) any IRS employee in his or her official capacity; (c) any IRS employee in his or her personal capacity if the IRS or the DOJ has agreed to provide representation for the employee; or (d) the United States is a part to, has an interest in, or is likely to be affected by, the proceeding, and the IRS or the DOJ determines that the information is relevant and necessary. Information may be disclosed to the adjudicative body to resolve issues of relevancy, necessity, or privilege pertaining to the information.

(3) Disclose information to Federal, state, local, tribal, and foreign law enforcement and regulatory agencies regarding violations or possible violations of Bank Secrecy Act, money laundering, tax, and other financial laws when relevant and necessary to obtain information for an investigation or enforcement activity.

(4) Disclose information to a Federal, state, local, or tribal agency, or other public authority responsible for implementing, enforcing, investigating, or prosecuting the violation of a statute, rule, regulation, order, or license, when a record on its face, or in conjunction with other records, indicates a potential violation of law or regulation and the information disclosed is relevant to any regulatory, enforcement, investigative, or prosecutorial responsibility of the receiving authority.

(5) Disclose information to a contractor hired by the IRS, including an expert witness or a consultant, to the extent necessary for the performance of a contract.

(6) Disclose information to third parties during the course of an investigation to the extent necessary to obtain information pertinent to the investigation.

(7) Disclose information to officials of labor organizations recognized under 5 U.S.C. Chapter 71 when relevant and necessary to their duties of exclusive representation.

(8) Disclose information to foreign governments in accordance with international agreements.

(9) Disclose information to the news media as described in IRS Policy Statement 11–94 (formerly P–1–183), News Coverage to Advance Deterrent Value of Enforcement Activities Encouraged, IRM 1.2.19.1.9.

(10) Disclose information to a defendant in a criminal prosecution, the DOJ, or a court of competent jurisdiction when required in criminal discovery or by the Due Process Clause of the Constitution.

(11) Disclose information, to the extent deemed necessary and appropriate for use in announcements to the general public that the IRS or the Department of the Treasury seeks to locate, detain or arrest specified individuals in connection with criminal activity under CI's investigative jurisdiction.

(12) Disclose information to appropriate agencies, entities, and

persons when: (a) The IRS suspects or has confirmed that the security or confidentially of information in the system of records has been compromise; (b) the IRS has determined that as a result of the suspected or confirmed compromise there is a risk of harm to economic or property interest, identity theft or fraud, or harm to the security or integrity of this system or other systems or programs (whether maintained by the IRS or another agency or entity) that rely upon the compromised information; and (c) the disclosure made to such agencies, entities, and persons is reasonably necessary to assist in connection with IRS efforts to respond to the suspected or confirmed compromise and to prevent, minimize, or remedy such harm.

POLICIES AND PRACTICES FOR STORING, RETRIEVING, ACCESSING, RETAINING, AND DISPOSING OF RECORDS IN THE SYSTEM:

STORAGE:

Paper records and electronic media.

RETRIEVABILITY:

By name, address, Social Security Number, Taxpayer Identification Number, or telephone, passport, financial account, driver or professional license, or criminal record numbers, or other identifying detail contained in the investigative records, including financial information, geographical location/travel information, surveillance records, communication and contact information, or biographical data of the subject or an associate of the subject, a witness, or a victim of alleged identify theft or other fraudulent refund or tax scheme; identity of the individuals(s) who provided information; name or employee number of assigned employee(s).

SAFEGUARDS:

Access controls are not less than those published in IRM 10.2, Physical Security Program, and IRM 10.8, Information Technology (IT) Security.

RETENTION AND DISPOSAL:

Records pertaining to persons of interest identified by Special Agents assigned to the Dignitary Protection Detail are maintained until such time that the individual or group no longer poses a threat. Other records are retained and disposed of in accordance with the record control schedules applicable to the records of Criminal Investigation, Document 12990, Record Control Schedule 30 (formerly IRM 1.15.30).

SYSTEM MANAGER AND ADDRESS:

Chief, Criminal Investigation. (See the IRS Appendix below for address.)

NOTIFICATION PROCEDURE:

Individuals seeking notification of an access to any record contained in this system of records, or seeking to contest its content, may inquire in writing in accordance with instructions appearing at 31 CFR part 1, subpart C, Appendix B. Written inquiries should be addressed as stated in the Appendix published in the **Federal Register** on [Insert **Federal Register** Publication Date]. This system of records contains records that are exempt from the notification, access, and contest requirements pursuant to 5 U.S.C. 552a(j)(2).

RECORD ACCESS PROCEDURES:

See ''Notification Procedure'' above.

CONTESTING RECORD PROCEDURES:

See ''Notification Procedure'' above. 26 U.S.C. 7852(e) prohibits Privacy Act amendment of tax records.

RECORD SOURCE CATEGORIES:

This system of records contains investigatory material compiled for law enforcement purposes whose sources need not be reported.

EXEMPTIONS CLAIMED FOR THE SYSTEM:

This system has been designated exempt from sections (c)(3)–(4), (d)(1)–(4), (e)(1)–(3), (e)(4)(G)–(I), (e)(5), (e)(8), (f) and (g) of the Privacy Act, pursuant to 5 U.S.C. 552a(j)(2). (See 31 CFR 1.36).

Treasury/IRS 46.003

SYSTEM NAME:

Confidential Informants—Treasury/IRS.

SYSTEM LOCATION:

National Office (Criminal Investigation) and field offices. (See the IRS Appendix below for address.)

CATEGORIES OF INDIVIDUALS COVERED BY THE SYSTEM:

Current and former confidential informants; subjects of confidential informants' reports.

CATEGORIES OF RECORDS IN THE SYSTEM:

Information about current and former confidential informants, including their personal and financial information and investigative activities with which each confidential informant is connected.

AUTHORITY FOR MAINTENANCE OF THE SYSTEM:

5 U.S.C. 301, 26 U.S.C. 7801 and 7803; 31 U.S.C. 5311 *et seq.*, and Department of the Treasury delegation orders and directives authorizing CI to conduct investigations into specified non-tax crimes.

PURPOSE:

To maintain a file of the identities and background material of current and former confidential informants.

ROUTINE USES: OF RECORDS MAINTAINED IN THE SYSTEM, INCLUDING CATEGORIES OF USERS AND THE PURPOSES OF SUCH USES:

Disclosure of returns and return information may be made only as provided by 26 U.S.C. 6103. Material covered by rule 6(e) of the Federal Rules of Criminal Procedure may be disclosed only as permitted by that rule. Disclosure of information covered by 31 U.S.C. 5311, *et seq.* or 12 U.S.C. 1951, *et seq.* (Bank Secrecy Act) may be made only as provided by Title 31, U.S.C., and Treasury guidelines. Other records may be used as described below if the IRS deems that the purpose of the disclosure is compatible with the purpose for which the IRS collected the records and no privilege is asserted.

(1) Disclose information to the Department of Justice (DOJ) when seeking legal advice, or for use in any proceeding, or in preparation for any proceeding, when: (a) The IRS or any component thereof; (b) any IRS employee in his or her official capacity; (c) any IRS employee in his or her individual capacity if the IRS or the DOJ has agreed to provide representation for the employee; or (d) the United States is a party to, has an interest in, or is likely to be affected by the proceeding, and the IRS determines that the records are relevant and useful.

(2) Disclose information in a proceeding (including discovery) before a court, administrative tribunal, or other adjudicative body when: (a) The IRS or any component thereof; (b) any IRS employee in his or her official capacity; (c) any IRS employee in his or her personal capacity if the IRS or the DOJ has agreed to provide representation for the employee; or (d) the United States is a part to, has an interest in, or is likely to be affected by, the proceeding, and the IRS or the DOJ determines that the information is relevant and necessary. Information may be disclosed to the adjudicative body to resolve issues of relevancy, necessity, or privilege pertaining to the information.

(3) Disclose information to Federal, state, local, tribal, and foreign law enforcement and regulatory agencies regarding violations or possible violations of Bank Secrecy Act, money laundering, tax, and other financial laws when relevant and necessary to obtain information for an investigation or enforcement activity.

(4) Disclose information to a Federal, state, local, or tribal agency, or other public authority responsible for

implementing, enforcing, investigating, or prosecuting the violation of a statute, rule, regulation, order, or license, when a record on its face, or in conjunction with other records, indicates a potential violation of law or regulation and the information disclosed is relevant to any regulatory, enforcement, investigative, or prosecutorial responsibility of the receiving authority.

(5) Disclose information to a contractor hired by the IRS, including an expert witness or a consultant, to the extent necessary for the performance of a contract.

(6) Disclose information to third parties during the course of an investigation to the extent necessary to obtain information pertinent to the investigation.

(7) Disclose information to officials of labor organizations recognized under 5 U.S.C. Chapter 71 when relevant and necessary to their duties of exclusive representation.

(8) Disclose information to foreign governments in accordance with international agreements.

(9) Disclose information to the news media as described in IRS Policy Statement 11–94 (formerly P–1–183), News Coverage to Advance Deterrent Value of Enforcement Activities Encouraged, IRM 1.2.19.1.9.

(10) Disclose information to a defendant in a criminal prosecution, the DOJ, or a court of competent jurisdiction when required in criminal discovery or by the Due Process Clause of the Constitution.

(11) Disclose information to appropriate agencies, entities, and persons when: (a) The IRS suspects or has confirmed that the security or confidentially of information in the system of records has been compromise; (b) the IRS has determined that as a result of the suspected or confirmed compromise there is a risk of harm to economic or property interest, identity theft or fraud, or harm to the security or integrity of this system or other systems or programs (whether maintained by the IRS or another agency or entity) that rely upon the compromised information; and (c) the disclosure made to such agencies, entities, and persons is reasonably necessary to assist in connection with IRS efforts to respond to the suspected or confirmed compromise and to prevent, minimize, or remedy such harm.

POLICIES AND PRACTICES FOR STORING, RETRIEVING, ACCESSING, RETAINING, AND DISPOSING OF RECORDS IN THE SYSTEM:

STORAGE:

Paper records and electronic media.

RETRIEVABILITY:

By confidential informant's name, address, or Taxpayer Identification Number; investigation number; or other identifying detail (such as telephone, driver's license, passport, or financial account numbers); name of the subject or other persons identified in the confidential informant's report or memoranda; name or employee number of assigned employee(s).

SAFEGUARDS:

Access controls are not less than those published in IRM 10.2, Physical Security Program, and IRM 10.8, Information Technology (IT) Security.

RETENTION AND DISPOSAL:

Records are retained and disposed of in accordance with the record control schedules applicable to the records of Criminal Investigation, Document 12990, Record Control Schedule 30 (formerly IRM 1.15.30).

SYSTEM MANAGER(S) AND ADDRESS:

Chief, Criminal Investigation. (See the IRS Appendix below for address.)

NOTIFICATION PROCEDURE:

Individuals seeking notification of an access to any record contained in this system of records, or seeking to contest its content, may inquire in writing in accordance with instructions appearing at 31 CFR part 1, subpart C, Appendix B. Written inquiries should be addressed as stated in the Appendix published in the **Federal Register** on [Insert **Federal Register** Publication Date]. This system of records contains records that are exempt from the notification, access, and contest requirements pursuant to 5 U.S.C. 552a(j)(2).

RECORD ACCESS PROCEDURES:

See ''Notification Procedure'' above.

CONTESTING RECORD PROCEDURES:

See ''Notification Procedure'' above. 26 U.S.C. 7852(e) prohibits Privacy Act amendment of tax records.

RECORD SOURCE CATEGORIES:

This system of records contains investigatory material compiled for law enforcement purposes whose sources need not be reported.

EXEMPTIONS CLAIMED FOR THE SYSTEM:

This system has been designated exempt from sections (c)(3)–(4), (d)(1)–(4), (e)(1)–(3), (e)(4)(G)–(I), (e)(5), (e)(8), (f) and (g) of the Privacy Act, pursuant to 5 U.S.C. 552a(j)(2). (See 31 CFR 1.36).

Treasury/IRS 46.005

SYSTEM NAME:

Electronic Surveillance and Monitoring Records—Treasury/IRS.

SYSTEM LOCATION:

National Office (Criminal Investigation). (See the IRS Appendix below for address.)

CATEGORIES OF INDIVIDUALS COVERED BY THE SYSTEM:

Subjects of electronic surveillance including associates identified by the surveillance or otherwise.

CATEGORIES OF RECORDS IN THE SYSTEM:

Information received or developed during CI's investigative activities relating to authorized electronic surveillance activities; investigative reports and files regarding electronic surveillance conducted by CI independently or in conjunction with other Federal, state, local or foreign law enforcement, or intelligence agencies.

AUTHORITY FOR MAINTENANCE OF THE SYSTEM:

5 U.S.C. 301, and 26 U.S.C. 7801 and 7803; 31 U.S.C. 5311 *et seq.,* and Department of the Treasury delegation orders and directives authorizing CI to conduct investigations into specified non-tax crimes.

PURPOSE:

To maintain, analyze, and process sensitive investigative data obtained through authorized electronic surveillance that identifies or may identify criminal noncompliance with Federal tax law or other laws delegated to CI for enforcement.

ROUTINE USES: OF RECORDS MAINTAINED IN THE SYSTEM, INCLUDING CATEGORIES OF USERS AND THE PURPOSES OF SUCH USES:

Disclosure of returns and return information may be made only as provided by 26 U.S.C. 6103. Material covered by rule 6(e) of the Federal Rules of Criminal Procedure may be disclosed only as permitted by that rule. Disclosure of information covered by 31 U.S.C. 5311, *et seq.* or 12 U.S.C. 1951, *et seq.* (Bank Secrecy Act) may be made only as provided by Title 31, U.S.C., and Treasury guidelines. Other records may be used as described below if the IRS deems that the purpose of the disclosure is compatible with the purpose for which the IRS collected the records and no privilege is asserted.

(1) Disclose information to the Department of Justice (DOJ) when seeking legal advice, or for use in any proceeding, or in preparation for any proceeding, when: (a) The IRS or any component thereof; (b) any IRS

employee in his or her official capacity; (c) any IRS employee in his or her individual capacity if the IRS or the DOJ has agreed to provide representation for the employee; or (d) the United States is a party to, has an interest in, or is likely to be affected by the proceeding, and the IRS determines that the records are relevant and useful.

(2) Disclose information in a proceeding (including discovery) before a court, administrative tribunal, or other adjudicative body when: (a) The IRS or any component thereof: (b) Any IRS employee in his or her official capacity; (c) any IRS employee in his or her personal capacity if the IRS or the DOJ has agreed to provide representation for the employee; or (d) the United States is a part to, has an interest in, or is likely to be affected by, the proceeding, and the IRS or the DOJ determines that the information is relevant and necessary. Information may be disclosed to the adjudicative body to resolve issues of relevancy, necessity, or privilege pertaining to the information.

(3) Disclose information to Federal, state, local, tribal, and foreign law enforcement and regulatory agencies regarding violations or possible violations of Bank Secrecy Act, money laundering, tax, and other financial laws when relevant and necessary to obtain information for an investigation or enforcement activity.

(4) Disclose information to a Federal, state, local, or tribal agency, or other public authority responsible for implementing, enforcing, investigating, or prosecuting the violation of a statute, rule, regulation, order, or license, then a record on its face, or in conjunction with other records, indicates a potential violation of law or regulation and the information disclosed is relevant to any regulatory, enforcement, investigative, or prosecutorial responsibility of the receiving authority.

(5) Disclose information to a contractor hired by the IRS, including an expert witness or a consultant, to the extent necessary for the performance of a contract.

(6) Disclose information to third parties during the course of an investigation to the extent necessary to obtain information pertinent to the investigation.

(7) Disclose information to officials of labor organizations recognized under 5 U.S.C. Chapter 71 when relevant and necessary to their duties of exclusive representation.

(8) Disclose information to foreign governments in accordance with international agreements.

(9) Disclose information to the news media as described in IRS Policy Statement 11–94 (formerly P–1–183), News Coverage to Advance Deterrent Value of Enforcement Activities Encouraged, IRM 1.2.19.1.9.

(10) Disclose information to a defendant in a criminal prosecution, the DOJ, or a court of competent jurisdiction when required in criminal discovery or by the Due Process Clause of the Constitution.

(11) Disclose information to appropriate agencies, entities, and persons when: (a) The IRS suspects or has confirmed that the security or confidentially of information in the system of records has been compromise; (b) the IRS has determined that as a result of the suspected or confirmed compromise there is a risk of harm to economic or property interest, identity theft or fraud, or harm to the security or integrity of this system or other systems or programs (whether maintained by the IRS or another agency or entity) that rely upon the compromised information; and (c) the disclosure made to such agencies, entities, and persons is reasonably necessary to assist in connection with IRS efforts to respond to the suspected or confirmed compromise and to prevent, minimize, or remedy such harm.

POLICIES AND PRACTICES FOR STORING, RETRIEVING, ACCESSING, RETAINING, AND DISPOSING OF RECORDS IN THE SYSTEM:

STORAGE:

Paper records and electronic media.

RETRIEVABILITY:

By name, address, Taxpayer Identification Number, or other identifying detail (telephone, driver's license, passport, criminal record, or financial account numbers) of the subject or an associate of the subject; investigation number; address, telephone number, or other locational criteria of the person or location under surveillance; name or employee number of assigned employee(s).

SAFEGUARDS:

Access controls are not less than those published in IRM 10.2, Physical Security Program, and IRM 10.8, Information Technology (IT) Security.

RETENTION AND DISPOSAL:

Records are retained and disposed of in accordance with the record control schedules applicable to the records of Criminal Investigation, Document 12990, Record Control Schedule 30 (formerly IRM 1.15.30).

SYSTEM MANAGER AND ADDRESS:

Chief, Criminal Investigation. (See the IRS Appendix below for address.)

NOTIFICATION PROCEDURE:

Individuals seeking notification of an access to any record contained in this system of records, or seeking to contest its content, may inquire in writing in accordance with instructions appearing at 31 CFR part 1, subpart C, Appendix B. Written inquiries should be addressed as stated in the Appendix published in the **Federal Register** on [Insert **Federal Register** Publication Date]. This system of records contains records that are exempt from the notification, access, and contest requirements pursuant to 5 U.S.C. 552a(j)(2).

RECORD ACCESS PROCEDURES:

See ''Notification Process'' above.

CONTESTING RECORD PROCEDURES:

See ''Notification Process'' above. 26 U.S.C. 7852(e) prohibits Privacy Act amendment of tax records.

RECORD SOURCE CATEGORIES:

This system of records contains investigatory material compiled for law enforcement purposes whose sources need not be reported.

EXEMPTIONS CLAIMED FOR THE SYSTEM:

This system has been designated exempt from sections (c)(3)–(4), (d)(1)–(4), (e)(1)–(3), (e)(4)(G)–(I), (e)(5), (e)(8), (f) and (g) of the Privacy Act, pursuant to 5 U.S.C. 552a(j)(2). (See 31 CFR 1.36).

Treasury/IRS 46.015

SYSTEM NAME:

Relocated Witnesses—Treasury/IRS.

SYSTEM LOCATION:

Chief, Criminal Investigation. (See the IRS Appendix below for address.)

CATEGORIES OF INDIVIDUALS COVERED BY THE SYSTEM:

Relocated witnesses.

CATEGORIES OF RECORDS IN THE SYSTEM:

Records pertaining to the relocation of witnesses for their protection.

AUTHORITY FOR MAINTENANCE OF THE SYSTEM:

5 U.S.C. 301 and 26 U.S.C. 7801.

ROUTINE USES: OF RECORDS MAINTAINED IN THE SYSTEM, INCLUDING CATEGORIES OF USERS AND THE PURPOSES OF SUCH USES:

Disclosure of returns and return information may be made only as provided by 26 U.S.C. 6103. Material covered by rule 6(e) of the Federal Rules of Criminal Procedure may be disclosed only as permitted by that rule. All other records may be used as described below if the IRS deems that the purpose of the disclosure is compatible with the purpose for which IRS collected the records, and no privilege is asserted.

To appropriate agencies, entities, and persons when: (a) The IRS suspects or has confirmed that the security or confidentiality of information in the system of records has been compromised; (b) the IRS has determined that as a result of the suspected or confirmed compromise there is a risk of harm to economic or property interests, identity theft or fraud, or harm to the security or integrity of this system or other systems or programs (whether maintained by the IRS or another agency or entity) that rely upon the compromised information; and (c) the disclosure made to such agencies, entities, and persons is reasonably necessary to assist in connection with IRS efforts to respond to the suspected or confirmed compromise and prevent, minimize, or remedy such harm.

POLICIES AND PRACTICES FOR STORING, RETRIEVING, ACCESSING, RETAINING, AND DISPOSING OF RECORDS IN THE SYSTEM:

STORAGE:

Paper records and electronic media.

RETRIEVABILITY:

By relocated witness' name.

SAFEGUARDS:

Access controls are not less than those published in IRM 10.8, Information Technology (IT) Security, and IRM 10.2, Physical Security Program.

RETENTION AND DISPOSAL:

Records are maintained in accordance with IRM 1.15, Records Management (also see Documents 12829 and 12990).

SYSTEM MANAGER AND ADDRESS:

Chief, Criminal Investigation. (See the IRS Appendix below for address.)

NOTIFICATION PROCEDURE:

This system may not be accessed for purposes of determining whether the system contains a record pertaining to a particular individual; the records are exempt under 5 U.S.C. 552a(j)(2).

RECORD ACCESS PROCEDURES:

This system may not be accessed for purposes of inspection or in order to contest the content of records; the records are exempt under 5 U.S.C. 552a(j)(2).

CONTESTING RECORD PROCEDURES:

26 U.S.C. 7852(e) prohibits Privacy Act amendment of tax records.

RECORD SOURCE CATEGORIES:

This system of records contains investigatory material compiled for law enforcement purposes whose sources need not be reported.

EXEMPTIONS CLAIMED FOR THE SYSTEM:

This system has been designated exempt from sections (c)(3)–(4), (d)(1)–(4), (e)(1)–(3), (e)(4)(G)–(I), (e)(5), (e)(8), (f) and (g) of the Privacy Act, pursuant to 5 U.S.C. 552a(j)(2). (See 31 CFR 1.36).

Treasury/IRS 46.050

SYSTEM NAME:

Automated Information Analysis and Recordkeeping System—Treasury/IRS.

SYSTEM LOCATION:

National Office (Criminal Investigation), field, campus, and computing center offices. (See the IRS Appendix below for address.)

CATEGORIES OF INDIVIDUALS COVERED BY THE SYSTEM:

Taxpayers and other individuals involved in financial transactions that require the filing of information reflected in the ''Categories of records'' below.

CATEGORIES OF RECORDS IN THE SYSTEM:

Financial records pertaining to transactions with reporting requirements under the Internal Revenue Code, the Bank Secrecy Act, or other Federal law, and reports of suspicious activity pertaining to such transaction. Such transactions include international transportation of currency or monetary instruments, cash payments of $10,000 received in a trade or business, financial institution currency transaction reports, registrations of money services businesses, and maintenance of accounts in banks or other financial institutions outside the U.S. Some records in this system are copies from other systems of record, including: Customer Account Data Engine Individual Master File (Treasury/IRS 24.030); Customer Account Data Engine Business Master File (Treasury/IRS 24.046); Currency Transaction Reports (CTRs) (FinCEN.003); Report of International Transportation of Currency or Monetary Instruments (CMIRs)(FinCEN.003); Suspicious Activity Reports (SARs)(FinCEN.002); Foreign Bank and Financial Accounts (FBARs)(FinCEN.003); Reports of Cash Payments over $10,000 Received in a Trade or Business (FinCEN.003); Registration of Money Services Business; and other forms required by the Bank Secrecy Act (FinCEN.003).

AUTHORITY FOR MAINTENANCE OF THE SYSTEM:

5 U.S.C. 301, and 26 U.S.C. 7801 and 7803; 31 U.S.C. 5311 *et seq.,* and Department of the Treasury delegation orders and directives authorizing CI to conduct investigations into specified non-tax crimes.

PURPOSE:

To maintain, analyze, and process records and information that may identify patterns of financial transactions indicative of criminal and/or civil noncompliance with tax, money laundering, Bank Secrecy Act, and other financial laws and regulations delegated to CI for investigation or enforcement, and that identifies or may identify the individuals connected to such activity. To establish linkages between fraudulent transactions or other activities, and the individuals involved in such actions, that may be used to further investigate such activity and to perfect filters that identify information pertaining to such activity.

ROUTINE USES: OF RECORDS MAINTAINED IN THE SYSTEM, INCLUDING CATEGORIES OF USERS AND THE PURPOSES OF SUCH USES:

Disclosure of returns and return information may be made only as provided by 26 U.S.C. 6103. Material covered by rule 6(e) of the Federal Rules of Criminal Procedure may be disclosed only as permitted by that rule. Disclosure of information covered by 31 U.S.C. 5311, *et seq.* or 12 U.S.C. 1951, *et seq.* (Bank Secrecy Act) may be made only as provided by Title 31, U.S.C., and Treasury guidelines. Other records may be used as described below if the IRS deems that the purpose of the disclosure is compatible with the purpose for which the IRS collected the records and no privilege is asserted.

(1) Disclose information to the Department of Justice (DOJ) when seeking legal advice, or for use in any proceeding, or in preparation for any proceeding, when: (a) The IRS or any component thereof; (b) Any IRS employee in his or her official capacity; (c) any IRS employee in his or her individual capacity if the IRS or the DOJ has agreed to provide representation for the employee; or (d) the United States is a party to, has an interest in, or is likely to be affected by the proceeding, and the IRS determines that the records are relevant and useful.

(2) Disclose information in a proceeding (including discovery) before a court, administrative tribunal, or other adjudicative body when: (a) The IRS or any component thereof: (b) Any IRS employee in his or her official capacity; (c) any IRS employee in his or her personal capacity if the IRS or the DOJ has agreed to provide representation for the employee; or (d) the United States is a part to, has an interest in, or is likely to be affected by, the proceeding, and the IRS or the DOJ determines that the information is relevant and necessary. Information may be disclosed to the adjudicative body to resolve issues of

relevancy, necessity, or privilege pertaining to the information.

(3) Disclose information to Federal, state, local, tribal, and foreign law enforcement and regulatory agencies regarding violations or possible violations of Bank Secrecy Act, money laundering, tax, and other financial laws when relevant and necessary to obtain information for an investigation or enforcement activity.

(4) Disclose information to a Federal, state, local, or tribal agency, or other public authority responsible for implementing, enforcing, investigating, or prosecuting the violation of a statute, rule, regulation, order, or license, then a record on its face, or in conjunction with other records, indicates a potential violation of law or regulation and the information disclosed is relevant to any regulatory, enforcement, investigative, or prosecutorial responsibility of the receiving authority.

(5) Disclose information to a contractor hired by the IRS, including an expert witness or a consultant, to the extent necessary for the performance of a contract.

(6) Disclose information to third parties during the course of an investigation to the extent necessary to obtain information pertinent to the investigation.

(7) Disclose information to officials of labor organizations recognized under 5 U.S.C. Chapter 71 when relevant and necessary to their duties of exclusive representation.

(8) Disclose information to foreign governments in accordance with international agreements.

(9) Disclose information to the news media as described in IRS Policy Statement 11–94 (formerly P–1–183), News Coverage to Advance Deterrent Value of Enforcement Activities Encouraged, IRM 1.2.19.1.9.

(10) Disclose information to a defendant in a criminal prosecution, the DOJ, or a court of competent jurisdiction when required in criminal discovery or by the Due Process Clause of the Constitution.

(11) Disclose information to appropriate agencies, entities, and persons when: (a) The IRS suspects or has confirmed that the security or confidentially of information in the system of records has been compromise; (b) the IRS has determined that as a result of the suspected or confirmed compromise there is a risk of harm to economic or property interest, identity theft or fraud, or harm to the security or integrity of this system or other systems or programs (whether maintained by the IRS or another agency or entity) that rely upon the compromised information; and (c) the disclosure made to such agencies, entities, and persons is reasonably necessary to assist in connection with IRS efforts to respond to the suspected or confirmed compromise and to prevent, minimize, or remedy such harm.

POLICIES AND PRACTICES FOR STORING, RETRIEVING, ACCESSING, RETAINING, AND DISPOSING OF RECORDS IN THE SYSTEM:

STORAGE:

Paper records and electronic media.

RETRIEVABILITY:

By name, address, Taxpayer Identification Number, or other identifying detail (such as telephone, driver license, passport, criminal record, financial account, or professional license numbers) of the subject or an associate of the subject, a witness, or a victim of alleged identity theft or other fraudulent refund or tax scheme; identity of the individual who provided information; name or employee number of the assigned employee(s).Social Security Number

SAFEGUARDS:

Access controls are not less than those published in IRM 10.2, Physical Security Program, and IRM 10.8, Information Technology (IT) Security.

RETENTION AND DISPOSAL:

Records are retained and disposed of in accordance with the record control schedules applicable to the records of Criminal Investigation, Document 12990, Record Control Schedule 30 (formerly IRM 1.15.30).

SYSTEM MANAGER AND ADDRESS:

Chief, Criminal Investigation. (See the IRS Appendix below for address.)

NOTIFICATION PROCEDURE:

Individuals seeking notification of an access to any record contained in this system of records, or seeking to contest its content, may inquire in writing in accordance with instructions appearing at 31 CFR part 1, subpart C, Appendix B. Written inquiries should be addressed as stated in the Appendix published in the **Federal Register** on [Insert **Federal Register** Publication Date]. This system of records contains records that are exempt from the notification, access, and contest requirements pursuant to 5 U.S.C. 552a(j)(2).

RECORD ACCESS PROCEDURES:

See ''Notification Process'' above.

CONTESTING RECORD PROCEDURES:

See ''Notification Process'' above. 26 U.S.C. 7852(e) prohibits Privacy Act amendment of tax records.

RECORD SOURCE CATEGORIES:

This system of records contains investigatory material compiled for law enforcement purposes whose sources need not be reported.

EXEMPTIONS CLAIMED FOR THE SYSTEM:

This system is exempt from 5 U.S.C. 552a(c)(3), (c)(4), (d)(1)–(4), (e)(1), (e)(2), (e)(3), (e)(4)(G), (e)(4)(H), (e)(4)(I), (e)(5), (e)(8), (f), and (g) of the Privacy Act pursuant to 5 U.S.C. 552a(j)(2) and (k)(2). Additionally, pursuant to 5 U.S.C. 552a(k)(2), it is exempt from 5 U.S.C. 552a (c)(3), (d)(1)–(4), (e)(1), (e)(4)(G)–(I) and (f) of the Privacy Act. (See 31 CFR 1.36).

Treasury/IRS 48.001

SYSTEM NAME:

Disclosure Records—Treasury/IRS.

SYSTEM LOCATION:

National Office, field, computing center, and campus offices. (See the IRS Appendix below for address.)

CATEGORIES OF INDIVIDUALS COVERED BY THE SYSTEM:

(1) Subjects of ex parte orders or written requests for tax information in non-tax criminal matters or with respect to terrorist activities under 26 U.S.C. 6103(i).

(2) Persons who have made requests or demands for IRS information under Treas. Reg. 301.9000–1 through –6 in matters falling under the jurisdiction of Privacy, Governmental Liaison and Disclosure (PGLD).

(3) Requesters of and intended recipients of letter forwarding services.

(4) Persons who have applied for Federal employment or presidential appointments and applicants for Department of Commerce ''E'' Awards, for whom tax checks have been requested.

(5) Requesters for access to records pursuant to 26 U.S.C. 6103, the Freedom of Information Act (FOIA), 5 U.S.C. 552, and initiators of requests for access, amendment or other action pursuant to the Privacy Act of 1974, 5 U.S.C. 552a.

(6) Individuals identified on Forms 10848, Report of Inadvertent Disclosure of Tax and Privacy Act Information.

(7) Individuals identified by, or initiating other correspondence or inquiries with, matters falling under the jurisdiction of PGLD.

CATEGORIES OF RECORDS IN THE SYSTEM:

Correspondence, demands and requests for IRS records, responses to those requests, notes and other background information, copies of records secured, testimony authorizations, tax check

documentation, Forms 10848, any documents related to the processing of FOIA, PA or other requests.

AUTHORITY FOR MAINTENANCE OF THE SYSTEM:

5 U.S.C. 301, 552, 552a and 26 U.S.C. 7801.

PURPOSE:

To track the processing of requests or demands for agency records under applicable laws and regulations concerning the disclosure of official information.

ROUTINE USES: OF RECORDS MAINTAINED IN THE SYSTEM, INCLUDING CATEGORIES OF USERS AND THE PURPOSES OF SUCH USES:

Disclosure of returns and return information may be made only as provided by 26 U.S.C. 6103. Material covered by rule 6(e) of the Federal Rules of Criminal Procedure may be disclosed only as permitted by that rule. All other records may be used as described below if the IRS deems that the purpose of the disclosure is compatible with the purpose for which IRS collected the records, and no privilege is asserted:

(1) Disclose information to the Department of Justice (DOJ) when seeking legal advice or for use in any proceeding, or in preparation for any proceeding, when: (a) The IRS or any component thereof; (b) any IRS employee in his or her official capacity; (c) any IRS employee in his or her individual capacity if the IRS or DOJ has agreed to provide representation for the employee; or (d) the United States is a party to, has an interest in, or is likely to be affected by, the proceeding and the IRS determines that the records are relevant and necessary to the proceeding or advice sought.

(2) Disclose information in a proceeding (including discovery) before a court, administrative tribunal, or other adjudicative body when: (a) The IRS or any component thereof: (b) Any IRS employee in his or her official capacity; (c) any IRS employee in his or her personal capacity if the IRS or the DOJ has agreed to provide representation for the employee; or (d) the United States is a part to, has an interest in, or is likely to be affected by, the proceeding, and the IRS or the DOJ determines that the information is relevant and necessary. Information may be disclosed to the adjudicative body to resolve issues of relevancy, necessity, or privilege pertaining to the information.

(3) Disclose information to an appropriate Federal, state, local, tribal, or foreign agency, or other public authority, responsible for implementing or enforcing, or for investigating or prosecuting the violation of, a statute, rule, regulation, order, or license, when a record on its face, or in conjunction with other records, indicates a potential violation of law or regulation and the information disclosed is relevant to any regulatory, enforcement, investigative, or prosecutorial responsibility of the receiving authority.

(4) Disclose debtor information to a Federal payer agency for purposes of salary and administrative offsets, to a consumer reporting agency to obtain commercial credit reports, and to a debt collection agency for debt collection services.

(5) Disclose information to the news media as described in the IRS Policy Statement P–1–183, News Coverage to Advance Deterrent Value of Enforcement Activities Encouraged, IRM 1.2.1.2.41.

(6) To appropriate agencies, entities, and persons when: (a) The IRS suspects or has confirmed that the security or confidentiality of information in the system of records has been compromised; (b) the IRS has determined that as a result of the suspected or confirmed compromise there is a risk of harm to economic or property interests, identity theft or fraud, or harm to the security or integrity of this system or other systems or programs (whether maintained by the IRS or another agency or entity) that rely upon the compromised information; and (c) the disclosure made to such agencies, entities, and persons is reasonably necessary to assist in connection with IRS efforts to respond to the suspected or confirmed compromise and prevent, minimize, or remedy such harm.

POLICIES AND PRACTICES FOR STORING, RETRIEVING, ACCESSING, RETAINING, AND DISPOSING OF RECORDS IN THE SYSTEM:

STORAGE:

Paper records and electronic media.

RETRIEVABILITY:

By name or Taxpayer Identification Number (TIN) (*e.g.,* Social Security number (SSN), Employer Identification Number (EIN), or other similar number assigned by the IRS).

SAFEGUARDS:

Access controls are not less than those published in IRM 10.8, Information Technology (IT) Security, and IRM 10.2, Physical Security Program.

RETENTION AND DISPOSAL:

Records are maintained in accordance with IRM 1.15, Records Management also see Documents 12829 and 12990.

SYSTEM MANAGER AND ADDRESS:

Director, Privacy, Governmental Liaison & Disclosure. (See the IRS Appendix below for address.)

NOTIFICATION PROCEDURE:

This system may not be accessed for purposes of determining whether the system contains a record pertaining to a particular individual; the records are exempt under 5 U.S.C. 552a(k)(2).

RECORD ACCESS PROCEDURES:

This system may not be accessed for purposes of inspection or in order to contest the content of records; the records are exempt under 5 U.S.C. 552a(k)(2).

CONTESTING RECORD PROCEDURES:

26 U.S.C. 7852(e) prohibits Privacy Act amendment of tax records. Other records are exempt from contest as stated in ''Record Access Procedures'' above.

RECORD SOURCE CATEGORIES:

This system of records contains investigatory material compiled for law enforcement purposes whose sources need not be reported.

EXEMPTIONS CLAIMED FOR THE SYSTEM:

This system is exempt from 5 U.S.C. 552a(c)(3), (d)(1)–(4), (e)(1), (e)(4)(G)–(I) and (f) of the Privacy Act pursuant to 5 U.S.C. 552a(k)(2). (See 31 CFR 1.36).

Treasury/IRS 48.008

SYSTEM NAME:

Defunct Special Service Staff Files Being Retained Because of Congressional Directive—Treasury/IRS.

SYSTEM LOCATION:

National Office (Privacy, Governmental Liaison & Disclosure). (See the IRS Appendix below for address.)

CATEGORIES OF INDIVIDUALS COVERED BY THE SYSTEM:

Individuals suspected of violating the internal revenue law by the Special Service Staff before its discontinuation on August 23, 1973.

CATEGORIES OF RECORDS IN THE SYSTEM:

Individual Master File printouts; returns and field reports; information from other law enforcement government investigative agencies; Congressional Reports, and news media articles.

AUTHORITY FOR MAINTENANCE OF THE SYSTEM:

5 U.S.C. 301 and 26 U.S.C. 7801.

PURPOSE:

To preserve under Congressional Directive the activities of the Special

Services Staff before its discontinuation in order to permit subjects of the former Special Services Staff to view records about themselves. This system is no longer being used by the Internal Revenue Service. The Special Service Staff was abolished on August 13, 1973.

ROUTINE USES: OF RECORDS MAINTAINED IN THE SYSTEM, INCLUDING CATEGORIES OF USERS AND THE PURPOSES OF SUCH USES:

Disclosure of returns and return information may be made only as provided by 26 U.S.C. 6103. Material covered by rule 6(e) of the Federal Rules of Criminal Procedure may be disclosed only as permitted by that rule. All other records may be used as described below if the IRS deems that the purpose of the disclosure is compatible with the purpose for which IRS collected the records, and no privilege is asserted.

(1) Disclose information to the Department of Justice (DOJ) when seeking legal advice or for use in any proceeding, or in preparation for any proceeding, when: (a) The IRS or any component thereof; (b) any IRS employee in his or her official capacity; (c) any IRS employee in his or her individual capacity if the IRS or DOJ has agreed to provide representation for the employee; or (d) the United States is a party to, has an interest in, or is likely to be affected by, the proceeding and the IRS determines that the records are relevant and necessary to the proceeding or advice sought.

(2) Disclose information in a proceeding (including discovery) before a court, administrative tribunal, or other adjudicative body when: (a) The IRS or any component thereof; (b) any IRS employee in his or her official capacity; (c) any IRS employee in his or her personal capacity if the IRS or the DOJ has agreed to provide representation for the employee; or (d) the United States is a part to, has an interest in, or is likely to be affected by, the proceeding, and the IRS or the DOJ determines that the information is relevant and necessary. Information may be disclosed to the adjudicative body to resolve issues of relevancy, necessity, or privilege pertaining to the information.

(3) To appropriate agencies, entities, and persons when: (a) The IRS suspects or has confirmed that the security or confidentiality of information in the system of records has been compromised; (b) the IRS has determined that as a result of the suspected or confirmed compromise there is a risk of harm to economic or property interests, identity theft or fraud, or harm to the security or integrity of this system or other systems or programs (whether maintained by the IRS or another agency or entity) that rely upon the compromised information; and (c) the disclosure made to such agencies, entities, and persons is reasonably necessary to assist in connection with IRS efforts to respond to the suspected or confirmed compromise and prevent, minimize, or remedy such harm.

POLICIES AND PRACTICES FOR STORING, RETRIEVING, ACCESSING, RETAINING, AND DISPOSING OF RECORDS IN THE SYSTEM:

STORAGE:

Paper records.

RETRIEVABILITY:

By subject name.

SAFEGUARDS:

Access controls are not less than those published in IRM 10.8, Information Technology (IT) Security, and IRM 10.2, Physical Security Program.

RETENTION AND DISPOSAL:

Records are maintained in accordance with IRM 1.15, Records Management (also see Documents 12829 and 12990).

SYSTEM MANAGER AND ADDRESS:

Director, Privacy, Governmental Liaison & Disclosure. (See the IRS Appendix below for address.)

NOTIFICATION PROCEDURE:

Individuals seeking to determine if this system of records contains a record pertaining to themselves may inquire in accordance with instructions appearing at 31 CFR part 1, subpart C, appendix B. Inquiries should be addressed as in ''Record Access Procedures'' below.

RECORD ACCESS PROCEDURES:

Individuals seeking access to any record contained in this system of records, or seeking to contest its content, may inquire in accordance with instructions appearing at 31 CFR part 1, subpart C, appendix B. Inquiries should be addressed to the Disclosure Office for Privacy Act requests listed in the IRS Appendix below. The IRS may assert 5 U.S.C. 552a(d)(5) as appropriate.

CONTESTING RECORD PROCEDURES:

26 U.S.C. 7852(e) prohibits Privacy Act amendment of tax records.

RECORD SOURCE CATEGORIES:

News media articles, taxpayers' returns and records, informant and third party information, other Federal agencies and examinations of related or other taxpayers.

EXEMPTIONS CLAIMED FOR THE SYSTEM:

None.

Treasury/IRS 49.001

SYSTEM NAME:

Collateral and Information Requests System—Treasury/IRS.

SYSTEM LOCATION:

National Office, field, campus, and computing center offices. (See the IRS Appendix below for address.)

CATEGORIES OF INDIVIDUALS COVERED BY THE SYSTEM:

U.S. citizens, resident aliens, and nonresident aliens whose tax matters come under the jurisdiction of the U.S. competent authority in accordance with pertinent provisions of tax treaties with foreign countries.

CATEGORIES OF RECORDS IN THE SYSTEM:

Records of interviews with witnesses regarding financial transactions of taxpayers; employment data; bank and brokerage house records; probate records; property valuations; public documents; payments of foreign taxes; inventories of assets; business books and records.

These records relate to tax investigations conducted by the IRS where some aspects on an investigation must be pursued in foreign countries pursuant to the various tax conventions between the United States and foreign governments. The records also include individual case files of taxpayers on whom information (as is pertinent to carrying out the provisions of the convention or preventing fraud or fiscal evasion in relation to the taxes which are the subject of this convention) is exchanged with foreign tax officials of treaty countries.

AUTHORITY FOR MAINTENANCE OF THE SYSTEM:

5 U.S.C. 301 and 26 U.S.C. 7801.

PURPOSE:

To maintain records of correspondence and other documentation with respect to the exchange of information requests by or to foreign governments with which the U.S. maintains tax treaties.

ROUTINE USES: OF RECORDS MAINTAINED IN THE SYSTEM, INCLUDING CATEGORIES OF USERS AND THE PURPOSES OF SUCH USES:

Disclosure of returns and return information may be made only as provided by 26 U.S.C. 6103. Disclosure of tax treaty information may be made only as provided by 26 U.S.C. 6105. Material covered by rule 6(e) of the Federal Rules of Criminal Procedure may be disclosed only as permitted by that rule. All other records may be used as described below if the IRS deems that the purpose of the disclosure is

compatible with the purpose for which IRS collected the records, and no privilege is asserted.

To appropriate agencies, entities, and persons when: (a) The IRS suspects or has confirmed that the security or confidentiality of information in the system of records has been compromised; (b) the IRS has determined that as a result of the suspected or confirmed compromise there is a risk of harm to economic or property interests, identity theft or fraud, or harm to the security or integrity of this system or other systems or programs (whether maintained by the IRS or another agency or entity) that rely upon the compromised information; and (c) the disclosure made to such agencies, entities, and persons is reasonably necessary to assist in connection with IRS efforts to respond to the suspected or confirmed compromise and prevent, minimize, or remedy such harm.

POLICIES AND PRACTICES FOR STORING, RETRIEVING, ACCESSING, RETAINING, AND DISPOSING OF RECORDS IN THE SYSTEM:

STORAGE:

Paper records and electronic media.

RETRIEVABILITY:

By taxpayer name.

SAFEGUARDS:

Access controls are not less than those published in IRM 10.8, Information Technology (IT) Security, and IRM 10.2, Physical Security Program.

RETENTION AND DISPOSAL:

Records are maintained in accordance with IRM 1.15, Records Management (also see Documents 12829 and 12990).

SYSTEM MANAGER AND ADDRESS:

Division Commissioner, LB&I. See the IRS Appendix below for address.

NOTIFICATION PROCEDURE:

This system may not be accessed for purposes of determining whether the system contains a record pertaining to a particular individual; the records are exempt under 5 U.S.C. 552a(k)(2).

RECORD ACCESS PROCEDURES:

This system may not be accessed for purposes of inspection or in order to contest the content of records; the records are exempt under 5 U.S.C. 552a(k)(2).

CONTESTING RECORD PROCEDURES:

26 U.S.C. 7852(e) prohibits Privacy Act amendment of tax records.

RECORD SOURCE CATEGORIES:

This system of records contains investigatory material compiled for law enforcement purposes whose sources need not be reported.

EXEMPTIONS CLAIMED FOR THE SYSTEM:

This system is exempt from 5 U.S.C. 552a(c)(3), (d)(1)–(4), (e)(1), (e)(4)(G)–(I) and (f) of the Privacy Act pursuant to 5 U.S.C. 552a(k)(2). (See 31 CFR 1.36).

Treasury/IRS 49.002

SYSTEM NAME:

Tax Treaty Information Management System—Treasury/IRS.

SYSTEM LOCATION:

National Office, field, campus, and computing center offices. (See the IRS Appendix below for address.)

CATEGORIES OF INDIVIDUALS COVERED BY THE SYSTEM:

U.S. citizens, resident aliens, and nonresident aliens whose tax matters come under the jurisdiction of the U.S. competent authority in accordance with pertinent provisions of tax treaties with foreign countries.

CATEGORIES OF RECORDS IN THE SYSTEM:

Management information regarding investigations of, or information exchange requests about taxpayers pursuant to tax treaties between the United States and foreign governments, including information from the Master File, including the taxpayer's DIF Score, and a code identifying taxpayers that threatened or assaulted IRS employees.

AUTHORITY FOR MAINTENANCE OF THE SYSTEM:

5 U.S.C. 301 and 26 U.S.C. 7801.

PURPOSE:

To track the inventory of individual case files of taxpayers who request competent authority assistance pursuant to the provisions of income tax treaties, or about whom information exchange requests are made by foreign governments pursuant to applicable tax treaties.

ROUTINE USES: OF RECORDS MAINTAINED IN THE SYSTEM, INCLUDING CATEGORIES OF USERS AND THE PURPOSES OF SUCH USES:

Disclosure of returns and return information may be made only as provided by 26 U.S.C. 6103. Disclosure of tax treaty information may be made only as provided by 26 U.S.C. 6105. Material covered by rule 6(e) of the Federal Rules of Criminal Procedure may be disclosed only as permitted by that rule. All other records may be used as described below if the IRS deems that the purpose of the disclosure is compatible with the purpose for which IRS collected the records, and no privilege is asserted.

To appropriate agencies, entities, and persons when: (a) The IRS suspects or has confirmed that the security or confidentiality of information in the system of records has been compromised; (b) the IRS has determined that as a result of the suspected or confirmed compromise there is a risk of harm to economic or property interests, identity theft or fraud, or harm to the security or integrity of this system or other systems or programs (whether maintained by the IRS or another agency or entity) that rely upon the compromised information; and (c) the disclosure made to such agencies, entities, and persons is reasonably necessary to assist in connection with IRS efforts to respond to the suspected or confirmed compromise and prevent, minimize, or remedy such harm.

POLICIES AND PRACTICES FOR STORING, RETRIEVING, ACCESSING, RETAINING, AND DISPOSING OF RECORDS IN THE SYSTEM:

STORAGE:

Paper records and electronic media.

RETRIEVABILITY:

By taxpayer name.

SAFEGUARDS:

Access controls are not less than those published in IRM 10.8, Information Technology (IT) Security, and IRM 10.2, Physical Security Program.

RETENTION AND DISPOSAL:

Records are maintained in accordance with IRM 1.15, Records Management (also see Documents 12829 and 12990).

SYSTEM MANAGER(S) AND ADDRESS:

Division Commissioner, LB&I. (See the IRS Appendix below for address.)

NOTIFICATION PROCEDURE:

This system may not be accessed for purposes of determining whether the system contains a record pertaining to a particular individual; the records are exempt under 5 U.S.C. 552a(k)(2).

RECORD ACCESS PROCEDURES:

This system may not be accessed for purposes of inspection or in order to contest the content of records; the records are exempt under 5 U.S.C. 552a(k)(2).

CONTESTING RECORD PROCEDURES:

26 U.S.C. 7852(e) prohibits Privacy Act amendment of tax records.

RECORD SOURCE CATEGORIES:

This system of records contains investigatory material compiled for law enforcement purposes whose sources need not be reported.

EXEMPTIONS CLAIMED FOR THE SYSTEM:

This system is exempt from 5 U.S.C. 552a(c)(3), (d)(1)–(4), (e)(1), (e)(4)(G)–(I)

and (f) of the Privacy Act pursuant to 5 U.S.C. 552a(k)(2). (See 31 CFR 1.36).

Treasury/IRS 50.001

SYSTEM NAME:

Tax Exempt & Governmental Entities (TE/GE) Correspondence Control Records—Treasury/IRS.

SYSTEM LOCATION:

National Office, field, campus, and computing center offices (TE/GE). (See the IRS Appendix below for address.)

CATEGORIES OF INDIVIDUALS COVERED BY THE SYSTEM:

Requesters of letter rulings and determination letters, and subjects of field office requests for technical advice and assistance and other correspondence, including correspondence associated with section 527 organizations.

CATEGORIES OF RECORDS IN THE SYSTEM:

Name, date, nature and subject of an assignment, and work history. Subsystems include case files and section 527 records that contain the correspondence, internal memoranda, digests of issues involved in proposed revenue rulings, and related material.

AUTHORITY FOR MAINTENANCE OF THE SYSTEM:

5 U.S.C. 301 and 26 U.S.C. 7801.

ROUTINE USES: OF RECORDS MAINTAINED IN THE SYSTEM, INCLUDING CATEGORIES OF USERS AND THE PURPOSES OF SUCH USES:

Disclosure of returns and return information may be made only as provided by 26 U.S.C. 6103 and 6104 where applicable. All other records may be used as described below if the IRS deems that the purpose of the disclosure is compatible with the purpose for which IRS collected the records, and no privilege is asserted.

To appropriate agencies, entities, and persons when: (a) The IRS suspects or has confirmed that the security or confidentiality of information in the system of records has been compromised; (b) the IRS has determined that as a result of the suspected or confirmed compromise there is a risk of harm to economic or property interests, identity theft or fraud, or harm to the security or integrity of this system or other systems or programs (whether maintained by the IRS or another agency or entity) that rely upon the compromised information; and (c) the disclosure made to such agencies, entities, and persons is reasonably necessary to assist in connection with IRS efforts to respond to the suspected or confirmed compromise and prevent, minimize, or remedy such harm.

POLICIES AND PRACTICES FOR STORING, RETRIEVING, ACCESSING, RETAINING, AND DISPOSING OF RECORDS IN THE SYSTEM:

STORAGE:

Paper records and electronic media.

RETRIEVABILITY:

By name of requester or the subject of a letter ruling, determination letter, or other correspondence.

SAFEGUARDS:

Access controls are not less than those published in IRM 10.8, Information Technology (IT) Security, and IRM 10.2, Physical Security Program.

RETENTION AND DISPOSAL:

Records are maintained in accordance with IRM 1.15, Records Management (also see Documents 12829 and 12990).

SYSTEM MANAGER AND ADDRESS:

Division Commissioner, TE/GE. (See the IRS Appendix below for address.)

NOTIFICATION PROCEDURE:

Individuals seeking to determine if this system of records contains a record pertaining to themselves may inquire in accordance with instructions appearing at 31 CFR part 1, subpart C, appendix B. Inquiries should be addressed as in ''Record Access Procedures'' below.

RECORD ACCESS PROCEDURES:

Individuals seeking access to any record contained in this system of records, or seeking to contest its content, may inquire in accordance with instructions appearing at 31 CFR part 1, subpart C, Appendix B. Inquiries should be addressed to the Disclosure Office for Privacy Act requests listed in the IRS Appendix below.

CONTESTING RECORD PROCEDURES:

26 U.S.C. 7852(e) prohibits Privacy Act amendment of tax records.

RECORD SOURCE CATEGORIES:

Individuals who request rulings, determination letters, or submit other correspondence, and field offices requesting technical advice or assistance.

EXEMPTIONS CLAIMED FOR THE SYSTEM:

None.

Treasury/IRS 50.003

SYSTEM NAME:

Tax Exempt & Government Entities (TE/GE) Reports of Significant Matters—Treasury/IRS.

SYSTEM LOCATION:

National Office, field, and campus offices. (See the IRS Appendix below for address.)

CATEGORIES OF INDIVIDUALS COVERED BY THE SYSTEM:

Individuals who submit letter ruling requests or determination letter requests with respect to organizations, or who are the subjects of technical advice requests, where the matter raised has some significance to tax administration.

CATEGORIES OF RECORDS IN THE SYSTEM:

Summaries of significant technical matters pertaining to letter rulings or determination letters under the jurisdiction of the Division Commissioner, TE/GE.

AUTHORITY FOR MAINTENANCE OF THE SYSTEM:

5 U.S.C. 301 and 26 U.S.C. 7801.

ROUTINE USES: OF RECORDS MAINTAINED IN THE SYSTEM, INCLUDING CATEGORIES OF USERS AND THE PURPOSES OF SUCH USES:

Disclosure of returns and return information may be made only as provided by 26 U.S.C. 6103 and 6104 where applicable. All other records may be used as described below if the IRS deems that the purpose of the disclosure is compatible with the purpose for which IRS collected the records, and no privilege is asserted.

To appropriate agencies, entities, and persons when: (a) The IRS suspects or has confirmed that the security or confidentiality of information in the system of records has been compromised; (b) the IRS has determined that as a result of the suspected or confirmed compromise there is a risk of harm to economic or property interests, identity theft or fraud, or harm to the security or integrity of this system or other systems or programs (whether maintained by the IRS or another agency or entity) that rely upon the compromised information; and (c) the disclosure made to such agencies, entities, and persons is reasonably necessary to assist in connection with IRS efforts to respond to the suspected or confirmed compromise and prevent, minimize, or remedy such harm.

POLICIES AND PRACTICES FOR STORING, RETRIEVING, ACCESSING, RETAINING, AND DISPOSING OF RECORDS IN THE SYSTEM:

STORAGE:

Paper records and electronic media.

RETRIEVABILITY:

By name of the requester or the subject of a letter ruling, determination letter, or other correspondence.

SAFEGUARDS:

Access controls are not less than those published in IRM 10.8, Information Technology (IT) Security, and IRM 10.2, Physical Security Program.

RETENTION AND DISPOSAL:

Records are maintained in accordance with IRM 1.15, Records Management (also see Documents 12829 and 12990).

SYSTEM MANAGER AND ADDRESS:

Division Commissioner, TE/GE. (See the IRS Appendix below for address.)

NOTIFICATION PROCEDURE:

Individuals seeking to determine if this system of records contains a record pertaining to themselves may inquire in accordance with instructions appearing at 31 CFR part 1, subpart C, appendix B. Inquiries should be addressed as in ''Record Access Procedures'' below.

RECORD ACCESS PROCEDURES:

Individuals seeking access to any record contained in this system of records, or seeking to contest its content, may inquire in accordance with instructions appearing at 31 CFR part 1, subpart C, appendix B. Inquiries should be addressed to the Disclosure Office for Privacy Act requests listed in the IRS Appendix below.

CONTESTING RECORD PROCEDURES:

26 U.S.C. 7852(e) prohibits Privacy Act amendment of tax records.

RECORD SOURCE CATEGORIES:

Individuals who submit determination or letter ruling requests and the employees who process them.

EXEMPTIONS CLAIMED FOR THE SYSTEM:

None.

Treasury/IRS 50.222

SYSTEM NAME:

Tax Exempt/Government Entities (TE/GE) Case Management Records—Treasury/IRS.

SYSTEM LOCATION:

Office of the Division Commissioner, Tax Exempt/Government Entities (TE/GE), National Office, Area Offices, Local Offices, Service Campuses, and Computing Centers. (See the IRS Appendix below for addresses.)

CATEGORIES OF INDIVIDUALS COVERED BY THE SYSTEM:

Individuals who are the subject of or are connected to TE/GE examinations and tax determinations, including compliance projects, regarding Federal tax exemption requirements, employee plan requirements, and employment tax requirements.

CATEGORIES OF RECORDS IN THE SYSTEM:

These records include case identification, assignment, and status information from TE/GE examination and tax determination files, information about individuals pertaining to TE/GE's methods of investigating exempt organizations, retirement plans, and government entities with regard to their compliance with statutory Federal requirements and/or their tax exempt status. In addition, this system contains identifying information regarding informants who have provided information that is significant and relevant to TE/GE investigations of taxpayers.

AUTHORITY FOR MAINTENANCE OF THE SYSTEM:

5 U.S.C. 301; 26 U.S.C. 7801.

PURPOSE:

This system will provide TE/GE records for case management, including employee assignments and file tracking. TE/GE maintains records on businesses, organizations, employee plans, government entities, and Indian Tribal Government entities and individuals, such as principals and officers, connected with these entities. Records in this system are used for law enforcement investigations and may contain identifying information about informants who have provided significant information relevant to investigations of taxpayers.

ROUTINE USES: OF RECORDS MAINTAINED IN THE SYSTEM INCLUDING CATEGORIES OF USERS AND PURPOSES OF SUCH USES:

Disclosure of return and return information may be made only as provided by 26 U.S.C. 6103. All other records may be used as described below if the IRS deems that the purpose of the disclosure is compatible with the purpose for which IRS collected the records, and no privilege is asserted.

To appropriate agencies, entities, and persons when: (a) The IRS suspects or has confirmed that the security or confidentiality of information in the system of records has been compromised; (b) the IRS has determined that as a result of the suspected or confirmed compromise there is a risk of harm to economic or property interests, identity theft or fraud, or harm to the security or integrity of this system or other systems or programs (whether maintained by the IRS or another agency or entity) that rely upon the compromised information; and (c) the disclosure made to such agencies, entities, and persons is reasonably necessary to assist in connection with IRS efforts to respond to the suspected or confirmed compromise and prevent, minimize, or remedy such harm.

POLICIES AND PRACTICES FOR STORING, RETRIEVING, ACCESSING, RETAINING AND DISPOSING OF RECORDS IN THE SYSTEM:

STORAGE:

Paper records and electronic media.

RETRIEVABILITY:

By taxpayer name, Taxpayer Identification Number (TIN) (*e.g.,* Social Security Number (SSN), Employer Identification Number (EIN), or other similar number assigned by the IRS), or by IRS employee name or identification number for the employee who is assigned the case, project, or determination.

SAFEGUARDS:

Access controls are not less than those published in IRM 10.8, Information Technology (IT) Security, and IRM 10.2, Physical Security Program.

RETENTION AND DISPOSAL:

Records are maintained in accordance with IRM 1.15, Records Management (also see Documents 12829 and 12990).

SYSTEM MANAGER(S) AND ADDRESS:

Division Commissioner, TE/GE. (See the IRS Appendix below for address.)

NOTIFICATION PROCEDURE:

This system may not be accessed for purposes of determining whether the system contains a record pertaining to a particular individual. The records are exempt under 5 U.S.C. 552a(k)(2) from the notification provisions of the Privacy Act.

RECORD ACCESS PROCEDURES:

This system may not be accessed to inspect or contest the content of records. The records are exempt under 5 U.S.C. 552a(k)(2) from the access provisions of the Privacy Act.

CONTESTING RECORDS PROCEDURES:

26 U.S.C. 7852(e) prohibits Privacy Act amendment of tax records.

RECORDS SOURCE CATEGORIES:

Information is obtained from tax returns, application returns and supporting material, determination files, examination files, compliance review files, compliance programs and projects, and IRS personnel records.

EXEMPTIONS CLAIMED FOR THE SYSTEM:

This system has been designated as exempt from sections (c)(3), (d)(1)–(4), (e)(1), (e)(4)(G)–(I), and (f) of the Privacy Act, pursuant to 5 U.S.C. 552a(k)(2). (See 31 CFR 1.36.)

Treasury/IRS 60.000

SYSTEM NAME:

Employee Protection System Records—Treasury/IRS.

SYSTEM LOCATION:

National Office, field and campus offices. (See the IRS Appendix below for address.)

CATEGORIES OF INDIVIDUALS COVERED BY THE SYSTEM:

Individuals attempting to interfere with the administration of internal revenue laws through assaults, threats, suicide threats, filing or threats of filing frivolous criminal or civil legal actions against Internal Revenue Service (IRS) employees, or IRS contractors or the employees' or contractors' immediate family members, or through forcible interference against any officer, government contractor or employee while discharging the official duties at his/her position. An individual is designated as a potentially dangerous taxpayer (PDT), based on reliable information, furnished to the IRS or Treasury Inspector General for Tax Administration (TIGTA), that fits any of the criteria (1) through (5) below: (1) Individuals who assault employees or members of the employees' immediate families; (2) individuals who attempt to intimidate or threaten employees or members of the employees' immediate families through specific threats of bodily harm, a show of weapons, the use of animals, or through other specific threatening or intimidating behavior; (3) individuals who are active members of groups that advocate violence against IRS employees specifically, or against Federal employees generally where advocating such violence could reasonably be understood to threaten the safety of IRS employees and impede the performance of their official duties; (4) individuals who have committed the acts set forth in any of the above criteria, but whose acts have been directed against employees or contractors of other governmental agencies at Federal, state, county, or local levels; and (5) individuals who are not designated as potentially dangerous taxpayers through application of the above criteria, but who have demonstrated a clear propensity toward violence through act(s) of violent behavior within the five-year period immediately preceding the time of referral of the individual to the Employee Protection System (EPS). An individual is designated as a taxpayer who should be approached with caution (CAU), based on reliable information furnished to the IRS or the TIGTA, individuals who have threatened physical harm that is less severe or immediate than necessary to satisfy PDT criteria, suicide threat by the taxpayer, or individuals who have filed or threatened to file a frivolous civil or criminal legal action (including liens, civil complaints in a court, criminal charges) against any IRS employee or contractor, or their immediate families.

CATEGORIES OF RECORDS IN THE SYSTEM:

Documents reporting the incident; documentary evidence of the incident (*e.g.* threatening correspondence, copies of liens and legal actions); documentation of investigation of incident, with report of investigation, statements, affidavits, and related tax information; records of any legal action resulting from the incident; local police records of individual named in the incident, if such records are requested or otherwise provided during investigation of the incident; FBI record of individual named in the incident, if such records are requested or otherwise provided during investigation of the incident; newspaper or periodical items, or information from other sources, provided to the IRS or to TIGTA for investigation of individuals who have demonstrated a clear propensity toward violence; correspondence regarding the reporting of the incident, referrals for investigation, investigation of the incident; and result of investigation (*i.e.* designation as PDT or CAU).

AUTHORITY FOR MAINTENANCE OF THE SYSTEM:

5 U.S.C. 301 and 26 U.S.C. 7801.

PURPOSE:

To maintain reports by IRS employees or contractors of attempts by individuals to obstruct or impede them or other law enforcement personnel in the performance of their official duties, investigations into the matters reported, and determinations whether the taxpayers should be designated a PDT or CAU.

ROUTINE USES: OF RECORDS MAINTAINED IN THE SYSTEM, INCLUDING CATEGORIES OF USERS AND THE PURPOSES OF SUCH USE:

Disclosure of returns and return information may be made only as provided by 26 U.S.C. 6103. Material covered by rule 6(e) of the Federal Rules of Criminal Procedure may be disclosed only as permitted by that rule. All other records may be used as described below if the IRS deems that the purpose of the disclosure is compatible with the purpose for which IRS collected the records, and no privilege is asserted.

(1) Disclose information to the Department of Justice (DOJ) when seeking legal advice, or for use in any proceeding, or in preparation for any proceeding, when: (a) The IRS or any component thereof; (b) any IRS employee in his or her official capacity; (c) any IRS employee in his or her individual capacity if the IRS or the DOJ has agreed to provide representation for the employee; or (d) the United States is a party to, has an interest in, or is likely to be affected by the proceeding, and the IRS determines that the records are relevant and useful.

(2) Disclose information in a proceeding (including discovery) before a court, administrative tribunal, or other adjudicative body when: (a) The IRS or any component thereof; (b) any IRS employee in his or her official capacity; (c) any IRS employee in his or her personal capacity if the IRS or DOJ has agreed to provide representation for the employee; or (d) the United States is a party to, has an interest in, or is likely to be affected by, the proceeding and the IRS or DOJ determines that the information is relevant and necessary to the proceeding. Information may be disclosed to the adjudicative body to resolve issues of relevancy, necessity, or privilege pertaining to the information.

(3) Disclose information to a Federal, state, local, or tribal agency, or other public authority, which has requested information relevant or necessary to hiring or retaining an employee, or issuing or continuing a contract, security clearance, license, grant, or other benefit.

(4) Disclose information to an appropriate Federal, state, local, tribal, or foreign agency, or other public authority, responsible for implementing or enforcing, or for investigating or prosecuting the violation of, a statute, rule, regulation, order, or license, when a record on its face, or in conjunction with other records, indicates a potential violation of law or regulation and the information disclosed is relevant to any regulatory, enforcement, investigative, or prosecutorial responsibility of the receiving authority.

(5) Disclose information to the news media as described in the IRS Policy Statement P–1–183, News Coverage to Advance Deterrent Value of Enforcement Activities Encouraged, IRM 1.2.1.2.41.

(6) Disclose information to third parties during the course of an investigation to the extent necessary to obtain information pertinent to the investigation.

(7) To appropriate agencies, entities, and persons when: (a) The IRS suspects or has confirmed that the security or confidentiality of information in the system of records has been compromised; (b) the IRS has determined that as a result of the suspected or confirmed compromise there is a risk of harm to economic or property interests, identity theft or fraud, or harm to the security or integrity of this system or other systems

or programs (whether maintained by the IRS or another agency or entity) that rely upon the compromised information; and (c) the disclosure made to such agencies, entities, and persons is reasonably necessary to assist in connection with IRS efforts to respond to the suspected or confirmed compromise and prevent, minimize, or remedy such harm.

POLICIES AND PRACTICES FOR STORING, RETRIEVING, ACCESSING, RETAINING, AND DISPOSING OF RECORDS IN THE SYSTEM:

STORAGE:

Paper records and electronic media.

RETRIEVABILITY:

By name or Social Security Number (SSN) of individual with respect to whom the PDT or CAU designation is being considered and by administrative case control number.

SAFEGUARDS:

Access controls are not less than those published in IRM 10.8, Information Technology (IT) Security, and IRM 10.2, Physical Security Program.

RETENTION AND DISPOSAL:

Records are maintained in accordance with IRM 1.15, Records Management (also see Documents 12829 and 12990).

SYSTEM MANAGER(S) AND ADDRESS:

Chief, Office of Employee Protection. (See the IRS Appendix below for address.)

NOTIFICATION PROCEDURE:

This system may not be accessed for purposes of determining whether the system contains a record pertaining to a particular individual; the records are exempt under 5 U.S.C. 552a(k)(2).

RECORD ACCESS PROCEDURES:

This system may not be accessed to inspect or contest the content of records. The records are exempt under 5 U.S.C. 552a(k)(2) from the access provisions of the Privacy Act.

CONTESTING RECORD PROCEDURES:

26 U.S.C. 7852(e) prohibits Privacy Act amendment of tax records. Other records are exempt from contest as stated in ''Record Access Procedures'' above.

SOURCE CATEGORIES:

The system contains material for which sources need not be reported.

EXEMPTIONS CLAIMED FOR THE SYSTEM:

This system is exempt from 5 U.S.C. 552a(c)(3), (d)(1)–(4), (e)(1), (e)(4)(G)–(I) and (f) of the Privacy Act pursuant to 5 U.S.C. 552a(k)(2). (See 31 CFR 1.36.).

Treasury/IRS 70.001

SYSTEM NAME:

Individual Income Tax Returns, Statistics of Income—Treasury/IRS.

SYSTEM LOCATION:

National Office and campus offices. (See the IRS Appendix below for address.)

CATEGORIES OF INDIVIDUALS COVERED BY THE SYSTEM:

Individual taxpayers whose data is selected for compilation into a statistical sample.

CATEGORIES OF RECORDS IN THE SYSTEM:

Sources of income, exemptions, deductions, income tax, and tax credits, as reported on Form 1040 series of U.S. Individual income tax return. The records are used to prepare and publish statistics. The statistics, studies, and compilations are designed so as to prevent disclosure of any particular taxpayer's identity.

AUTHORITY FOR MAINTENANCE OF THE SYSTEM:

5 U.S.C. 301, 26 U.S.C. 6108 and 7801.

ROUTINE USES: OF RECORDS MAINTAINED IN THE SYSTEM, INCLUDING CATEGORIES OF USERS AND THE PURPOSES OF SUCH USES:

Disclosure of returns and return information may be made only as provided by 26 U.S.C. 6103 and 6108. All other records may be used as described below if the IRS deems that the purpose of the disclosure is compatible with the purpose for which IRS collected the records, and no privilege is asserted.

To appropriate agencies, entities, and persons when: (a) The IRS suspects or has confirmed that the security or confidentiality of information in the system of records has been compromised; (b) the IRS has determined that as a result of the suspected or confirmed compromise there is a risk of harm to economic or property interests, identity theft or fraud, or harm to the security or integrity of this system or other systems or programs (whether maintained by the IRS or another agency or entity) that rely upon the compromised information; and (c) the disclosure made to such agencies, entities, and persons is reasonably necessary to assist in connection with IRS efforts to respond to the suspected or confirmed compromise and prevent, minimize, or remedy such harm.

POLICIES AND PRACTICES FOR STORING, RETRIEVING, ACCESSING, RETAINING, AND DISPOSING OF RECORDS IN THE SYSTEM:

STORAGE:

Paper records and electronic media.

RETRIEVABILITY:

By taxpayer identification number (TIN) (*e.g.,* Social Security Number (SSN), Employer Identification Number (EIN), or other similar number assigned by the IRS), or document locator number (DLN).

SAFEGUARDS:

Access controls are not less than those published in IRM 10.8, Information Technology (IT) Security, and IRM 10.2, Physical Security Program.

RETENTION AND DISPOSAL:

Records are maintained in accordance with IRM 1.15, Records Management (also see Documents 12829 and 12990).

SYSTEM MANAGER AND ADDRESS:

Director, Research Analysis, and Statistics. (See the IRS Appendix below for address.)

NOTIFICATION PROCEDURE:

This system may not be accessed for purposes of determining whether the system contains a record pertaining to a particular individual; the records are exempt under 5 U.S.C. 552a(k)(4).

RECORD ACCESS PROCEDURES:

This system may not be accessed for purposes of inspection or in order to contest the content of records; the records are exempt under 5 U.S.C. 552a(k)(4).

CONTESTING RECORD PROCEDURES:

26 U.S.C. 7852(e) prohibits Privacy Act amendment of tax records.

RECORD SOURCE CATEGORIES:

Form 1040 series of U.S. Individual Income Tax Returns.

EXEMPTIONS CLAIMED FOR THE SYSTEM:

This system has been designated exempt from sections (c)(3), (d)(1)–(4), (e)(1), (e)(4)(G)–(I), and (f) of the Privacy Act, pursuant to 5 U.S.C. 552a(k)(4). See 31 CFR. 1.36.

Treasury/IRS 90.001

SYSTEM NAME:

Chief Counsel Management Information System Records —Treasury/IRS.

SYSTEM LOCATION:

Office of the Chief Counsel; Office of the Special Counsel to the National Taxpayer Advocate; Offices of the Associate Chief Counsel (Corporate),

(Financial Institutions & Products), (General Legal Services), (Income Tax & Accounting), (International), (Passthroughs & Special Industries), and (Procedure & Administration); Offices of the Division Counsel/Associate Chief Counsel, (Criminal Tax) and (Tax Exempt & Government Entities); and Office of the Division Counsel (Large Business & International), (Small Business/Self Employed) and (Wage & Investment); and Area Counsel offices. (See the IRS Appendix below for address.)

CATEGORIES OF INDIVIDUALS COVERED BY THE SYSTEM:

(1) Individuals who are the subjects of, or are connected to, matters received by or assigned to the Office of Chief Counsel.

(2) Chief Counsel employees.

CATEGORIES OF RECORDS IN THE SYSTEM:

Records that contain summary information concerning the description and status of assignments received in the Office of Chief Counsel. These records include the names or subjects of a case, the case file number, case status, issues, professional time expended, and due dates. These records may be used to produce management information on case inventory by taxpayer or employee name and professional time required to complete an assignment.

AUTHORITY FOR MAINTENANCE OF THE SYSTEM:

5 U.S.C. 301; 26 U.S.C. 7801 and 7803; 31 U.S.C. 330.

PURPOSE:

The computerized Counsel Automated System Environment (CASE) system is used to track, count, and measure the workload of the Office of Chief Counsel, capturing summary information (such as the name of principal parties or subjects, case file numbers, assignments, status, and classification) of cases and other matters assigned to Counsel personnel throughout their life cycle. CASE is used to generate reports to assist management and other employees to keep track of resources and professional time devoted to individual assignments and broad categories of workload. CASE information is also useful in the preparation of budget requests and other reports to the IRS, to the Treasury Department, or the Congress. CASE also serves as a timekeeping function for employees of the Office of Chief Counsel directly involved in cases and other matters.

ROUTINE USES: OF RECORDS MAINTAINED IN THE SYSTEM, INCLUDING CATEGORIES OF USERS AND THE PURPOSES OF SUCH USES:

Disclosure of returns and return information may be made only as provided by 26 U.S.C. 6103. Material covered by rule 6(e) of the Federal Rules of Criminal Procedure may be disclosed only as permitted by that rule. All other records may be used as described below if the IRS deems that the purpose of the disclosure is compatible with the purpose for which the IRS collected the records and no privilege is asserted. Accordingly, the IRS may:

(1) Disclose information to the Department of Justice (DOJ) when seeking legal advice, or for use in any proceeding, or in preparation for any proceeding, when: (a) The IRS or any component thereof; (b) any IRS employee in his or her official capacity; (c) any IRS employee in his or her individual capacity if the IRS or the DOJ has agreed to provide representation for the employee; or (d) the United States is a party to, has an interest in, or is likely to be affected by the proceeding, and the IRS determines that the records are relevant and useful.

(2) Disclose information in a proceeding (including discovery) before a court, administrative tribunal, or other adjudicative body when: (a) The IRS or any component thereof; (b) any IRS employee in his or her official capacity; (c) any IRS employee in his or her personal capacity if the IRS or the DOJ has agreed to provide representation for the employee; or (d) the United States is a party to, has an interest in, or is likely to be affected by, the proceeding, and the IRS or the DOJ determines that the information is relevant and necessary. Information may be disclosed to the adjudicative body to resolve issues of relevancy, necessity, or privilege pertaining to the information.

(3) Disclose information to the parties and to an arbitrator, mediator, or other neutral party, in the context of alternative dispute resolution, to the extent relevant and necessary for resolution of the matters presented, including asserted privileges.

(4) Disclose information to a former employee of the IRS to the extent necessary to refresh their recollection for official purposes when the IRS requires information and/or consultation assistance from the former employee regarding a matter within that individual's former area of responsibility.

(5) Disclose information to third parties during the course of an investigation to the extent necessary to obtain information pertinent to the investigation.

(6) Disclose information to a contractor hired by the IRS, including an expert witness or a consultant, to the extent necessary for the performance of a contract.

(7) Disclose information to a Federal, state, local, or tribal agency, or other public authority responsible for implementing, enforcing, investigating, or prosecuting the violation of a statute, rule, regulation, order, or license, when a record on its face, or in conjunction with other records, indicates a potential violation of law or regulation and the information disclosed is relevant to any regulatory, enforcement, investigative, or prosecutorial responsibility of the receiving authority.

(8) Disclose information to a Federal, state, local, or tribal agency, or other public authority that has requested information relevant or necessary to hiring or retaining an employee, or issuing or continuing a contract, security clearance, license, grant, or other benefit.

(9) To the extent consistent with the American Bar Association's Model Rules of Professional Conduct, Rule 4.2, disclose to any person the fact that his chosen legal representative may not be authorized to represent him before the IRS.

(10) Disclose information to a public, quasi-public, or private professional authority, agency, organization, or association, with which individuals covered by this system of records may be licensed by, subject to the jurisdiction of, a member of, or affiliated with, including but not limited to state bars and certified accountancy boards, to assist such authorities, agencies, organizations and associations in meeting their responsibilities in connection with the administration and maintenance of standards of integrity, conduct, and discipline.

(11) Disclose information to foreign governments in accordance with international agreements.

(12) Disclose information to officials of labor organizations recognized under 5 U.S.C. Chapter 71 when relevant and necessary to their duties of exclusive representation.

(13) Disclose information to appropriate agencies, entities, and persons when: (a) The IRS suspects or has confirmed that the security or confidentiality of information in the system of records has been compromised; (b) the IRS has determined that as a result of the suspected or confirmed compromise there is a risk of harm to economic or property interests, identity theft or fraud, or harm to the security or integrity of this system or other systems

or programs (whether maintained by the IRS or another agency or entity) that rely upon the compromised information; and (c) the disclosure made to such agencies, entities, and persons is reasonably necessary to assist in connection with the IRS' efforts to respond to the suspected or confirmed compromise and prevent, minimize, or remedy such harm.

POLICIES AND PRACTICES FOR STORING, RETRIEVING, ACCESSING, RETAINING, AND DISPOSING OF RECORDS IN THE SYSTEM:

STORAGE:

Paper records and electronic media.

RETRIEVABILITY:

Records are retrieved by the name or Taxpayer Identification Number of the individual to whom they apply, employees assigned, and by workload case number. If there are multiple parties to a proceeding, then the record is generally retrieved only by the name of the first listed person in the complaint or other document.

SAFEGUARDS:

Access controls are not less than those published in IRM 10.8, Information Technology (IT) Security, and IRM 10.2, Physical Security Program.

RETENTION AND DISPOSAL:

Records are retained and disposed of in accordance with the records control schedules applicable to the records of the Office of Chief Counsel, Document 12990, Record Control Schedules 12 through 15 (formerly IRM 1.15.13 through 1.15.15).

SYSTEM MANAGER(S) AND ADDRESS:

Associate Chief Counsel (Finance & Management). See the IRS Appendix below for the address.

NOTIFICATION PROCEDURE:

Individuals seeking notification and access to any record contained in this system of records, or seeking to contest its content, may inquire in writing in accordance with instructions appearing at 31 CFR part 1, appendix B. Written inquiries should be addressed to Chief, Disclosure and Litigation Support Branch, Legal Processing Division, IRS Office of Chief Counsel, CC:PA:LPD:DLS, 1111 Constitution Avenue NW., Washington, DC 20224. This system of records may contain records that are exempt from the notification, access, and contest requirements pursuant to 5 U.S.C. 552a(j)(2) and (k)(2). The IRS may assert 5 U.S.C. 552a(d)(5) as appropriate.

RECORD ACCESS PROCEDURES:

See ''Notification Procedure'' above.

CONTESTING RECORD PROCEDURES:

See ''Notification Procedure'' above. 26 U.S.C. 7852(e) prohibits Privacy Act amendment of tax records.

RECORD SOURCE CATEGORIES:

IRS and Chief Counsel employees; Department of Treasury employees; court records.

EXEMPTIONS CLAIMED FOR THE SYSTEM:

Some of the records in this system are exempt from sections (c)(3), (d)(1)–(4), (e)(1), (e)(4)(G)–(I), and (f) of the Privacy Act, pursuant to 5 U.S.C. 552a(j)(2) and 552a(k)(2). See 31 CFR 1.36.

Treasury/IRS 90.002

SYSTEM NAME:

Chief Counsel Litigation and Advice (Civil) Records—Treasury/IRS.

SYSTEM LOCATION:

Office of the Chief Counsel; Offices of the Associate Chief Counsel (Corporate), (Financial Institutions & Products), (General Legal Services), (Income Tax & Accounting), (International), (Passthroughs & Special Industries), and (Procedure & Administration); Office of the Division Counsel/Associate Chief Counsel (Tax Exempt & Government Entities); Offices of the Division Counsel (Large Business & International), (Small Business/Self Employed) and (Wage & Investment); Office of the Special Counsel to the National Taxpayer Advocate; Office of the Special Counsel to the Office of Professional Responsibility; and Area Counsel offices. (See the IRS Appendix below for address.)

CATEGORIES OF INDIVIDUALS COVERED BY THE SYSTEM:

(1) Individuals who have requested advice in the form of a letter ruling, closing agreement, or information letter as set forth under the first annual revenue procedure published by the IRS each year.

(2) Individuals who are the subject of technical advice that responds to any request on the interpretation and proper application of tax laws, tax treaties, regulations, revenue rulings, notices, or other precedents to a specific set of facts that concerns the treatment of an item in a year under examination or appeal, which is submitted under the second annual revenue procedure published by the IRS each year.

(3) Individuals about whom advice has been requested or provided under any other internal rules and procedures, such as may be set forth in the Internal Revenue Manual (IRM) or Chief Counsel Notices.

(4) Individuals who are subjects of, or provide information pertinent to, matters under the jurisdiction of the Office of Professional Responsibility, when such matters are brought to the attention of Counsel;

(5) Individuals who are parties to litigation with the IRS, or in litigation in which the IRS has an interest, or in proceedings before an administrative law judge.

(6) Individuals who have corresponded with, or who are the subjects of correspondence to, the IRS regarding a matter under consideration by these offices.

CATEGORIES OF RECORDS IN THE SYSTEM:

(1) Advice files;
(2) Litigation files;
(3) Correspondence files;
(4) Reference copies of selected work products.

AUTHORITY FOR MAINTENANCE OF THE SYSTEM:

5 U.S.C. 301; 26 U.S.C. 7801 and 7803; 31 U.S.C. 330 and 5314.

PURPOSE:

To represent the IRS' interests in litigation before the United States Tax Court and in proceedings before administrative law judges; to assist the Department of Justice in representing the IRS' interests in litigation before other Federal and state courts; to provide legal advice and assistance on civil tax administration matters, including matters pertaining to practice before the IRS and the regulation of tax return preparers; to respond to general inquiries and other correspondence related to these matters; to assist Counsel staff in coordinating and preparing future litigation, advice, or correspondence, to ensure the consistency of such work products and to retain copies of work products for historical, legal research, investigational, and similar purposes.

ROUTINE USES: OF RECORDS MAINTAINED IN THE SYSTEM, INCLUDING CATEGORIES OF USERS AND THE PURPOSES OF SUCH USES:

Disclosure of returns and return information may be made only as provided by 26 U.S.C. 6103. Material covered by rule 6(e) of the Federal Rules of Criminal Procedure may be disclosed only as permitted by that rule. All other records may be used as described below if the IRS deems the purpose of the disclosure is compatible with the purpose for which the IRS collected the records, and no privilege is asserted. Accordingly, the IRS may:

(1) Disclose information to the Department of Justice (DOJ) when seeking legal advice, or for use in any proceeding, or in preparation for any proceeding, when: (a) The IRS or any component thereof; (b) any IRS

employee in his or her official capacity; (c) any IRS employee in his or her individual capacity if the IRS or the DOJ has agreed to provide representation for the employee; or (d) the United States is a party to, has an interest in, or is likely to be affected by the proceeding, and the IRS determines that the records are relevant and useful.

(2) Disclose information in a proceeding (including discovery) before a court, administrative tribunal, or other adjudicative body when: (a) The IRS or any component thereof; (b) any IRS employee in his or her official capacity; (c) any IRS employee in his or her personal capacity if the IRS or the DOJ has agreed to provide representation for the employee; or (d) the United States is a party to, has an interest in, or is likely to be affected by the proceeding and the IRS or the DOJ determines that the information is relevant and necessary. Information may be disclosed to the adjudicative body to resolve issues of relevancy, necessity, or privilege pertaining to the information.

(3) Disclose information to the parties and to an arbitrator, mediator, or other neutral, in the context of alternative dispute resolution, to the extent relevant and necessary for resolution of the matters presented, including asserted privileges.

(4) Disclose information to a former employee of the IRS to the extent necessary to refresh their recollection for official purposes when the IRS requires information and/or consultation assistance from the former employee regarding a matter within that individual's former area of responsibility.

(5) Disclose information to third parties during the course of an investigation to the extent necessary to obtain information pertinent to the investigation.

(6) Disclose information to a contractor hired by the IRS, including an expert witness or a consultant, to the extent necessary for the performance of a contract.

(7) Disclose information to a Federal, state, local, or tribal agency, or other public authority responsible for implementing, enforcing, investigating, or prosecuting the violation of a statute, rule, regulation, order, or license, when a record on its face, or in conjunction with other records, indicates a potential violation of law or regulation and the information disclosed is relevant to any regulatory, enforcement, investigative, or prosecutorial responsibility of the receiving authority.

(8) Disclose information to a Federal, state, local, or tribal agency, or other public authority that has requested information relevant or necessary to hiring or retaining an employee, or issuing or continuing a contract, security clearance, license, grant, or other benefit.

(9) To the extent consistent with the American Bar Association's Model Rules of Professional Conduct, Rule 4.2, and Circular 230, disclose to any person the fact that his chosen legal representative may not be authorized to represent him before the IRS.

(10) Disclose information to a public, quasi-public, or private professional authority, agency, organization, or association, with which individuals covered by this system of records may be licensed by, subject to the jurisdiction of, a member of, or affiliated with, including but not limited to state bars and certified accountancy boards, to assist such authorities, agencies, organizations and associations in meeting their responsibilities in connection with the administration and maintenance of standards of integrity, conduct, and discipline.

(11) Disclose information to foreign governments in accordance with international agreements.

(12) Disclose information to officials of labor organizations recognized under 5 U.S.C. Chapter 71 when relevant and necessary to their duties of exclusive representation.

(13) Disclose information to the news media as described in the IRS Policy Statement P–1–183, News Coverage to Advance Deterrent Value of Enforcement Activities Encouraged, IRM 1.2.1.2.41.

(14) Disclose information to other Federal agencies holding funds of an individual for the purpose of collecting a liability owed by the individual.

(15) Disclose information to appropriate agencies, entities, and persons when: (a) The IRS suspects or has confirmed that the security or confidentiality of information in the system of records has been compromised; (b) the IRS has determined that as a result of the suspected or confirmed compromise there is a risk of harm to economic or property interests, identity theft or fraud, or harm to the security or integrity of this system or other systems or programs (whether maintained by the IRS or another agency or entity) that rely upon the compromised information; and (c) the disclosure made to such agencies, entities, and persons is reasonably necessary to assist in connection with the IRS' efforts to respond to the suspected or confirmed compromise and prevent, minimize, or remedy such harm.

Records of the Office of the Associate Chief Counsel (General Legal Services), including the various Area Counsel (General Legal Services), may also be used as described below if the IRS deems the purpose of the disclosure is compatible with the purpose for which the IRS collected the records, and no privilege is asserted.

(16) Disclose information to the Joint Board of Actuaries in enrollment and disciplinary matters.

(17) Disclose information to the Office of Personnel Management, Merit Systems Protection Board, the Office of Special Counsel, and the Equal Employment Opportunity Commission in personnel, discrimination, and labor management matters.

(18) Disclose information to arbitrators, the Federal Labor Relations Authority, including the Office of the General Counsel of that authority, the Federal Service Impasses Board, and the Federal Mediation and Conciliation Service in labor management matters.

(19) Disclose information to the General Services Administration in property management matters.

(20) Disclose information regarding financial disclosure statements to the IRS, which makes the statements available to the public as required by law.

(21) Disclose information to other federal agencies for the purpose of effectuating inter-agency salary offset or inter-agency administrative offset.

(22) Disclose information to the Office of Government Ethics in conflict of interest, conduct, financial statement reporting, and other ethics matters.

DISCLOSURE TO CONSUMER REPORTING AGENCIES:

Disclosures of debt information concerning a claim against an individual may be made from this system to consumer reporting agencies as defined in the Fair Credit Reporting Act, 15 U.S.C. 1681a(f) or the Federal Claims Collection Act of 1966, 31 U.S.C. 3701(a)(3).

POLICIES AND PRACTICES FOR STORING, RETRIEVING, ACCESSING, RETAINING, AND DISPOSING OF RECORDS IN THE SYSTEM:

STORAGE:

Paper records and electronic media.

RETRIEVABILITY:

By the (1) name(s) of the individual(s) to whom the records pertain, and related individuals; (2) subject matter; (3) certain key administrative dates; and (4) the internal control number for correspondence. If there are multiple parties to litigation, or other proceeding, then the record is generally retrieved

only by the name of the first listed person in the complaint or other document.

SAFEGUARDS:

A background investigation is made on personnel. Offices are located in secured areas. Access to keys to these offices is restricted. Access to records storage facilities is limited to authorized personnel or individuals in the company of authorized personnel. Access controls are not less than those provided by the Physical Security Standards, IRM 1.16, and Information Technology (IT) Security Policy and Standards, IRM 10.8.

RETENTION AND DISPOSAL:

Records are retained and disposed of in accordance with the records control schedules applicable to the records of the Office of Chief Counsel, Document 12990, Record Control Schedules 12 through 15, and 30 (formerly IRM 1.15.13 through 1.15.15, and 1.15.30).

SYSTEM MANAGER(S) AND ADDRESS(ES):

The Chief Counsel, Special Counsel to the National Taxpayer Advocate, Special Counsel to the Office of Professional Responsibility, each Associate Chief Counsel, and each Division Counsel is the system manager of the system in that office. See the IRS Appendix below for addresses.

NOTIFICATION PROCEDURE:

Individuals seeking notification and access to any record contained in this system of records, or seeking to contest its content, may inquire in writing in accordance with instructions appearing at 31 CFR part 1, appendix B. Written inquiries should be addressed to Chief, Disclosure and Litigation Support Branch, Legal Processing Division, IRS Office of Chief Counsel, CC:PA:LPD:DLS, 1111 Constitution Avenue NW., Washington, DC 20224. This system of records may contain records that are exempt from the notification, access, and contest requirements pursuant to 5 U.S.C. 552a(k)(2). The IRS may assert 5 U.S.C. 552a(d)(5) as appropriate.

RECORD ACCESS PROCEDURES:

See ''Notification Procedure'' above.

CONTESTING RECORD PROCEDURES:

See ''Notification Procedure'' above. 26 U.S.C. 7852(e) prohibits Privacy Act amendment of tax records.

RECORD SOURCE CATEGORIES:

Taxpayers and their representatives; Department of the Treasury personnel; other Federal agencies; state, local, tribal, and foreign governments, and other public authorities; witnesses; informants; parties to disputed matters of fact or law; judicial and administrative proceedings; congressional offices; labor organizations; public records such as telephone books, Internet Web sites, court documents, and real estate records; individual subjects of legal advice, written determinations, and other correspondence.

EXEMPTIONS CLAIMED FOR THE SYSTEM:

Some of the records in this system are exempt from sections (c)(3), (d)(1)–(4), (e)(1), (e)(4)(G)–(I), and (f) of the Privacy Act, pursuant to 5 U.S.C. 552a(k)(2). See 31 CFR 1.36.

Treasury/IRS 90.003

SYSTEM NAME:

Chief Counsel Litigation and Advice (Criminal) Records—Treasury/IRS.

SYSTEM LOCATION:

Office of the Chief Counsel; Office of the Division Counsel/Associate Chief Counsel (Criminal Tax); and Area Counsel (Criminal Tax) offices. (See the IRS Appendix below for address.)

CATEGORIES OF INDIVIDUALS COVERED BY THE SYSTEM:

(1) Individual subjects of investigations as to their compliance with tax and other laws under the jurisdiction of IRS Criminal Investigation, with respect to whom criminal recommendations have been made.

(2) Individuals who have requested advice, and about whom advice has been requested, concerning tax-related and criminal offenses under the jurisdiction of IRS Criminal Investigation, where these matters or issues are brought to Counsel's attention.

(3) Individuals who have filed petitions for the remission or mitigation of forfeitures or who are otherwise directly involved as parties in judicial or administrative forfeiture matters.

(4) Individuals who have requested advice, about whom advice has been requested, or with respect to whom a criminal recommendation has been made concerning non-tax criminal matters delegated to the IRS for enforcement and investigation, such as money laundering (18 U.S.C. 1956 and 1957) and the Bank Secrecy Act (31 U.S.C. 5311–5330).

(5) Individuals about whom advice has been requested or provided under any internal rules and procedures, as may be set forth in the Internal Revenue Manual (IRM), Chief Counsel Notices, or other internal issuances.

(6) Individuals who are parties to litigation with the IRS, or in litigation in which the IRS has an interest.

(7) Individuals who have corresponded with the IRS regarding a matter under consideration by these offices.

CATEGORIES OF RECORDS IN THE SYSTEM:

(1) Advice files;
(2) Litigation files;
(3) Correspondence files;
(4) Reference copies of selected work products.

AUTHORITY FOR MAINTENANCE OF THE SYSTEM:

5 U.S.C. 301; 26 U.S.C. 7801 and 7803; 31 U.S.C. 330 and 5311–5332.

PURPOSE:

To provide legal advice and assistance on criminal tax administration matters, and on nontax criminal matters delegated to the IRS; to assist the Department of Justice (DOJ) in representing the IRS' interests in litigation before Federal and state courts; to respond to general inquiries and other correspondence related to these matters; to assist Counsel staff in coordinating and preparing future litigation, advice, or correspondence to ensure the consistency of such work products and to retain copies of work products for historical, legal research, investigational, and similar purposes.

ROUTINE USES: OF RECORDS MAINTAINED IN THE SYSTEM, INCLUDING CATEGORIES OF USERS AND THE PURPOSES OF SUCH USES:

Disclosure of returns and return information may be made only as provided by 26 U.S.C. 6103. Material covered by rule 6(e) of the Federal Rules of Criminal Procedure may be disclosed only as permitted by that rule. All other records may be used as described below if the IRS deems the purpose of the disclosure is compatible with the purpose for which the IRS collected the records, and no privilege is asserted. Accordingly, the IRS may:

(1) Disclose information to the Department of Justice (DOJ) when seeking legal advice, or for use in any proceeding, or in preparation for any proceeding, when: (a) The IRS or any component thereof; (b) any IRS employee in his or her official capacity; (c) any IRS employee in his or her individual capacity if the IRS or the DOJ has agreed to provide representation for the employee; or (d) the United States is a party to, has an interest in, or is likely to be affected by the proceeding, and the IRS determines that the records are relevant and useful.

(2) Disclose information in a proceeding (including discovery) before a court, administrative tribunal, or other

adjudicative body when: (a) The IRS or any component thereof; (b) any IRS employee in his or her official capacity; (c) any IRS employee in his or her personal capacity if the IRS or the DOJ has agreed to provide representation for the employee; or (d) the United States is a party to, has an interest in, or is likely to be affected by the proceeding and the IRS or the DOJ determines that the information is relevant and necessary. Information may be disclosed to the adjudicative body to resolve issues of relevancy, necessity, or privilege pertaining to the information.

(3) Disclose information to the parties and to an arbitrator, mediator, or other neutral, in the context of alternative dispute resolution, to the extent relevant and necessary for resolution of the matters presented, including asserted privileges.

(4) Disclose information to a former employee of the IRS to the extent necessary to refresh their recollection for official purposes when the IRS requires information and/or consultation assistance from the former employee regarding a matter within that individual's former area of responsibility.

(5) Disclose information to third parties during the course of an investigation to the extent necessary to obtain information pertinent to the investigation.

(6) Disclose information to a contractor hired by the IRS, including an expert witness or a consultant, to the extent necessary for the performance of a contract.

(7) Disclose information to a Federal, state, local, or tribal agency, or other public authority responsible for implementing, enforcing, investigating, or prosecuting the violation of a statute, rule, regulation, order, or license, when a record on its face, or in conjunction with other records, indicates a potential violation of law or regulation and the information disclosed is relevant to any regulatory, enforcement, investigative, or prosecutorial responsibility of the receiving authority.

(8) Disclose information to a Federal, state, local, or tribal agency, or other public authority that has requested information relevant or necessary to hiring or retaining an employee, or issuing or continuing a contract, security clearance, license, grant, or other benefit.

(9) To the extent consistent with the American Bar Association's Model Rules of Professional Conduct, Rule 4.2, disclose to any person the fact that his chosen legal representative may not be authorized to represent him before the IRS.

(10) Disclose information to a public, quasi-public, or private professional authority, agency, organization, or association, with which individuals covered by this system of records may be licensed by, subject to the jurisdiction of, a member of, or affiliated with, including but not limited to state bars and certified accountancy boards, to assist such authorities, agencies, organizations and associations in meeting their responsibilities in connection with the administration and maintenance of standards of integrity, conduct, and discipline.

(11) Disclose information to foreign governments in accordance with international agreements.

(12) Disclose information to officials of labor organizations recognized under 5 U.S.C. Chapter 71 when relevant and necessary to their duties of exclusive representation.

(13) Disclose information to the news media as described in the IRS Policy Statement P–1–183, News Coverage to Advance Deterrent Value of Enforcement Activities Encouraged, IRM 1.2.1.2.41.

(14) Disclose information to other Federal agencies holding funds of an individual for the purpose of collecting a liability owed by the individual.

(15) Disclose information to appropriate agencies, entities, and persons when: (a) The IRS suspects or has confirmed that the security or confidentiality of information in the system of records has been compromised; (b) the IRS has determined that as a result of the suspected or confirmed compromise there is a risk of harm to economic or property interests, identity theft or fraud, or harm to the security or integrity of this system or other systems or programs (whether maintained by the IRS or another agency or entity) that rely upon the compromised information; and (c) the disclosure made to such agencies, entities, and persons is reasonably necessary to assist in connection with the IRS' efforts to respond to the suspected or confirmed compromise and prevent, minimize, or remedy such harm.

POLICIES AND PRACTICES FOR STORING, RETRIEVING, ACCESSING, RETAINING, AND DISPOSING OF RECORDS IN THE SYSTEM:

STORAGE:

Paper records and electronic media.

RETRIEVABILITY:

By the (1) name(s) of the individual(s) to whom the records pertain, and related individuals; (2) subject matter; (3) certain key administrative dates; and (4) the internal control number for correspondence. If there are multiple parties to a proceeding, then the record is generally retrieved only by the name of the first listed person in the complaint or other document.

SAFEGUARDS:

Access controls are not less than those published in IRM 10.8, Information Technology (IT) Security, and IRM 10.2, Physical Security Program.

RETENTION AND DISPOSAL:

Records are retained and disposed of in accordance with the records control schedules applicable to the records of the Office of Chief Counsel, Document 12990, Record Control Schedules 13 through 15, and 30 (formerly IRM 1.15.13 through 1.15.15, and 1.15.30).

SYSTEM MANAGER(S) AND ADDRESS(ES):

The Division Counsel/Associate Chief Counsel (Criminal Tax) is the system manager. See the IRS Appendix, below for addresses.

NOTIFICATION PROCEDURE:

Individuals seeking notification and access to any record contained in this system of records, or seeking to contest its content, may inquire in writing in accordance with instructions appearing at 31 CFR part 1, appendix B. Written inquiries should be addressed to Chief, Disclosure and Litigation Support Branch, Legal Processing Division, IRS Office of Chief Counsel, CC:PA:LPD:DLS, 1111 Constitution Avenue NW., Washington, DC 20224. This system of records may contain records that are exempt from the notification, access, and contest requirements pursuant to 5 U.S.C. 552a(j)(2). The IRS may assert 5 U.S.C. 552a(d)(5) as appropriate.

RECORD ACCESS PROCEDURES:

See ''Notification Procedure'' above.

CONTESTING RECORD PROCEDURES:

See ''Notification Procedure'' above. 26 U.S.C. 7852(e) prohibits Privacy Act amendment of tax records.

RECORD SOURCE CATEGORIES:

Taxpayers, or other subjects of investigation, and their representatives; Department of the Treasury personnel; other Federal agencies; state, local, tribal, and foreign governments, and other public authorities; witnesses; informants; parties to disputed matters of fact or law; judicial and administrative proceedings; congressional offices; labor organizations; public records such as telephone books, Internet Web sites, court documents, and real estate records; individual subjects of legal

advice, written determinations, and other correspondence.

EXEMPTIONS CLAIMED FOR THE SYSTEM:

Some of the records in this system are exempt from sections (c)(3)–(4); (d)(1)–(4); (e)(1)–(3); (e)(4)(G)–(I); (e)(5); (e)(8); (f) and (g) of the Privacy Act, pursuant to 5 U.S.C. 552a(j)(2). (See 31 CFR 1.36).

Treasury/IRS 90.004

SYSTEM NAME:

Chief Counsel Legal Processing Division Records—Treasury/IRS.

SYSTEM LOCATION:

Office of the Associate Chief Counsel (Procedure & Administration), National Office. (See the IRS Appendix below for address.)

CATEGORIES OF INDIVIDUALS COVERED BY THE SYSTEM:

Individuals who communicate with the IRS regarding access requests under the Freedom of Information Act (FOIA), Privacy Act of 1974, or 26 U.S.C. 6110, where these matters or issues are brought to Counsel's attention; payers of user fees under 26 U.S.C. 7528, 6103(p), and 31 U.S.C. 9701; recipients of payments of court judgments; individual taxpayers who are the subject of written determinations or other work products processed for public inspection under the FOIA or 26 U.S.C. 6110.

CATEGORIES OF RECORDS IN THE SYSTEM:

(1) Correspondence files.

(2) FOIA, Privacy Act, and 26 U.S.C. 6110 requests for Chief Counsel National Office records.

(3) Privacy Act requests to amend Chief Counsel National Office records.

(4) User fee files.

AUTHORITY FOR MAINTENANCE OF THE SYSTEM:

5 U.S.C. 301; 552, and 552a; 26 U.S.C. 7801 and 7803.

PURPOSE:

To coordinate searches and to make disclosure determinations with respect to Chief Counsel National Office records sought under FOIA, the Privacy Act, and 26 U.S.C. 6110. To respond to Privacy Act requests to amend Chief Counsel National Office records. To process user fees pertaining to Private Letter Rulings, Change in Accounting Methods (Form 3115), Change in Accounting Periods (Form 1128), Advance Pricing Agreements, and Closing Agreements. To process files for the payment of court judgments.

ROUTINE USES: OF RECORDS MAINTAINED IN THE SYSTEM, INCLUDING CATEGORIES OF USERS AND THE PURPOSES OF SUCH USES:

Disclosure of returns and return information may be made only as provided by 26 U.S.C. 6103. Material covered by rule 6(e) of the Federal Rules of Criminal Procedure may be disclosed only as permitted by that rule. All other records may be used as described below if the IRS deems that the purpose of the disclosure is compatible with the purpose for which the IRS collected the records, and no privilege is asserted. Accordingly, the IRS may:

(1) Disclose information to the Department of Justice (DOJ) when seeking legal advice, or for use in any proceeding, or in preparation for any proceeding, when: (a) The IRS or any component thereof; (b) any IRS employee in his or her official capacity; (c) any IRS employee in his or her individual capacity if the IRS or the DOJ has agreed to provide representation for the employee; or (d) the United States is a party to, has an interest in, or is likely to be affected by the proceeding, and the IRS determines that the records are relevant and useful.

(2) Disclose information in a proceeding (including discovery) before a court, administrative tribunal, or other adjudicative body when: (a) The IRS or any component thereof; (b) any IRS employee in his or her official capacity; (c) any IRS employee in his or her personal capacity if the IRS or the DOJ has agreed to provide representation for the employee; or (d) the United States is a party to, has an interest in, or is likely to be affected by the proceeding, and the IRS or the DOJ determines that the information is relevant and necessary. Information may be disclosed to the adjudicative body to resolve issues of relevancy, necessity, or privilege pertaining to the information.

(3) Disclose information to the parties and to an arbitrator, mediator, or other neutral, in the context of alternative dispute resolution, to the extent relevant and necessary for resolution of the matters presented, including asserted privileges.

(4) Disclose information to a former employee of the IRS to the extent necessary to refresh their recollection for official purposes when the IRS requires information and/or consultation assistance from the former employee regarding a matter within that individual's former area of responsibility.

(5) Disclose information to third parties during the course of an investigation to the extent necessary to obtain information pertinent to the investigation.

(6) Disclose information to a contractor hired by the IRS, including an expert witness or a consultant, to the extent necessary for the performance of a contract.

(7) Disclose information to an appropriate Federal, state, local, or tribal agency, or other public authority responsible for implementing, enforcing, investigating, or prosecuting the violation of a statute, rule, regulation, order, or license, when a record on its face, or in conjunction with other records, indicates a potential violation of law or regulation and the information disclosed is relevant to any regulatory, enforcement, investigative, or prosecutorial responsibility of the receiving authority.

(8) Disclose information to a Federal, state, local, or tribal agency, or other public authority that has requested information relevant or necessary to hiring or retaining an employee, or issuing or continuing a contract, security clearance, license, grant, or other benefit.

(9) To the extent consistent with the American Bar Association's Model Rules of Professional Conduct, Rule 4.2, disclose to any person the fact that his chosen legal representative may not be authorized to represent him before the IRS.

(10) Disclose information to a public, quasi-public, or private professional authority, agency, organization, or association, with which individuals covered by this system of records may be licensed by, subject to the jurisdiction of, a member of, or affiliated with, including but not limited to state bars and certified accountancy boards, to assist such authorities, agencies, organizations and associations in meeting their responsibilities in connection with the administration and maintenance of standards of integrity, conduct, and discipline.

(11) Disclose information to foreign governments in accordance with international agreements.

(12) Disclose information to officials of labor organizations recognized under 5 U.S.C. Chapter 71 when relevant and necessary to their duties of exclusive representation.

(13) Disclose information to the news media as described in the IRS Policy Statement P–1–183, News Coverage to Advance Deterrent Value of Enforcement Activities Encouraged, IRM 1.2.1.2.41.

(14) Disclose information to other Federal agencies holding funds of an individual for the purpose of collecting a liability owed by the individual.

(15) Disclose information to appropriate agencies, entities, and

persons when: (a) The IRS suspects or has confirmed that the security or confidentiality of information in the system of records has been compromised; (b) the IRS has determined that as a result of the suspected or confirmed compromise there is a risk of harm to economic or property interests, identity theft or fraud, or harm to the security or integrity of this system or other systems or programs (whether maintained by the IRS or another agency or entity) that rely upon the compromised information; and (c) the disclosure made to such agencies, entities, and persons is reasonably necessary to assist in connection with the IRS' efforts to respond to the suspected or confirmed compromise and prevent, minimize, or remedy such harm.

POLICIES AND PRACTICES FOR STORING, RETRIEVING, ACCESSING, RETAINING, AND DISPOSING OF RECORDS IN THE SYSTEM:

STORAGE:

Paper records and electronic media.

RETRIEVABILITY:

By the (1) name(s) of the individual(s) to whom the records pertain, and related individuals; (2) subject matter; (3) certain key administrative dates; and (4) the internal control number for correspondence. If there are multiple parties to a proceeding, then the record is generally retrieved only by the name of the first listed person in the complaint or other document.

SAFEGUARDS:

Access controls are not less than those published in IRM 10.8, Information Technology (IT) Security, and IRM 10.2, Physical Security Program.

RETENTION AND DISPOSAL:

Records are retained and disposed of in accordance with the records control schedules applicable to the records of the Office of Chief Counsel, Document 12990, Record Control Schedules 13 through 15 (formerly IRM 1.15.13 through 1.15.15). Freedom of Information Act request files are retained and disposed of in accordance with Schedule 13.

SYSTEM MANAGER(S) AND ADDRESS:

Associate Chief Counsel (Procedure & Administration), National Office. See the IRS Appendix below for the address.

NOTIFICATION PROCEDURE:

Individuals seeking notification and access to any record contained in this system of records, or seeking to contest its content, may inquire in writing in accordance with instructions appearing at 31 CFR part 1, appendix B. Written inquiries should be addressed to Chief, Disclosure and Litigation Support Branch, Legal Processing Division, IRS Office of Chief Counsel, CC:PA:LPD:DLS, 1111 Constitution Avenue NW., Washington, DC 20224. This system of records may contain records that are exempt from the notification, access, and contest requirements pursuant to 5 U.S.C. 552a(j)(2) and (k)(2). The IRS may assert 5 U.S.C. 552a(d)(5) as appropriate.

RECORD ACCESS PROCEDURES:

See ''Notification Procedure'' above.

CONTESTING RECORD PROCEDURES:

See ''Notification Procedure'' above. 26 U.S.C. 7852(e) prohibits Privacy Act amendment of tax records.

RECORD SOURCE CATEGORIES:

Persons who communicate with the IRS regarding FOIA, Privacy Act, and 26 U.S.C. 6110 requests, user fees or judgment payments; Department of Treasury employees; state, local, tribal, and foreign governments, and other public authorities; other Federal agencies; witnesses; informants; public sources such as telephone books, Internet Web sites, court documents, and real estate records.

EXEMPTIONS CLAIMED FOR THE SYSTEM:

User fee and judgment payment files can be accessed as described above. All other records in this system have been designated as exempt from sections (c)(3), (d)(1)–(4), (e)(1), (e)(4)(G)–(I), and (f) of the Privacy Act, pursuant to 5 U.S.C. 552a(j)(2) and 5 U.S.C. 552a(k)(2). (See 31 CFR 1.36).

Treasury/IRS 90.005

SYSTEM NAME:

Chief Counsel Library Records

SYSTEM LOCATION:

Office of the Associate Chief Counsel (Finance & Management), National Office. (See the IRS Appendix below for address.)

CATEGORIES OF INDIVIDUALS COVERED BY THE SYSTEM:

(1) IRS employees who check out materials from the Library or through inter-library loans.

(2) Individuals who are the subject of the work products maintained for reference (legal research) purposes on tax issues.

CATEGORIES OF RECORDS IN THE SYSTEM:

(1) Reference work product, including General Counsel Memoranda (GCMs), Office Memoranda (OMs), Actions on Decision (AODs), briefs, and other historical issuances dating back to 1916.

(2) Internal control records used to catalog and cross-reference records for legal research purposes.

AUTHORITY FOR MAINTENANCE OF THE SYSTEM:

5 U.S.C. 301; 26 U.S.C. 7801 and 7803; and 31 U.S.C. 330.

PURPOSE:

To track the location of materials borrowed from the library or through inter-library loan and to permit the research of the internal revenue laws.

ROUTINE USES: OF RECORDS MAINTAINED IN THE SYSTEM, INCLUDING CATEGORIES OF USERS AND THE PURPOSES OF SUCH USES:

Disclosure of returns and return information may be made only as provided by 26 U.S.C. 6103. Material covered by rule 6(e) of the Federal Rules of Criminal Procedure may be disclosed only as permitted by that rule. All other records may be used as described below if the IRS deems that the purpose of the disclosure is compatible with the purpose for which the IRS collected the records, anxd no privilege is asserted. Accordingly, the IRS may:

(1) Disclose information to the Department of Justice (DOJ) when seeking legal advice, or for use in any proceeding, or in preparation for any proceeding, when: (a) The IRS or any component thereof; (b) any IRS employee in his or her official capacity; (c) any IRS employee in his or her individual capacity if the IRS or the DOJ has agreed to provide representation for the employee; or (d) the United States is a party to, has an interest in, or is likely to be affected by the proceeding, and the IRS determines that the records are relevant and useful.

(2) Disclose information in a proceeding (including discovery) before a court, administrative tribunal, or other adjudicative body when: (a) The IRS or any component thereof, (b) any IRS employee in his or her official capacity, (c) any IRS employee in his or her personal capacity where the IRS or the Department of Justice (DOJ) has agreed to provide representation for the employee, or (d) the United States is a party to, has an interest in, or is likely to be affected by such proceeding, and the IRS or the DOJ determines that the information is relevant and necessary and not otherwise privileged. Information may be disclosed to the adjudicative body to resolve issues of relevancy, necessity, or privilege pertaining to the information.

(3) Disclose information to third parties during the course of an investigation to the extent necessary to obtain information pertinent to the investigation.

(4) Disclose information to a Federal, state, local, or tribal agency, or other public authority, responsible for implementing or enforcing, or for investigating or prosecuting the violation of a statute, rule, regulation, order, or license, when a record on its face, or in conjunction with other records, indicates a potential violation of law or regulation and the information disclosed is relevant to any regulatory, enforcement, investigative, or prosecutorial responsibility of the receiving authority.

(5) Disclose information to a Federal, state, local, or tribal agency, or other public authority that has requested information relevant or necessary to hiring or retaining an employee, or issuing or continuing a contract, security clearance, license, grant, or other benefit.

(6) Disclose information to foreign governments in accordance with international agreements.

(7) Disclose information to the news media as described in the IRS Policy Statement P–1–183, News Coverage to Advance Deterrent Value of Enforcement Activities Encouraged, IRM 1.2.1.2.41.

(8) Disclose information to officials of labor organizations recognized under 5 U.S.C. Chapter 71 when relevant and necessary to their duties of exclusive representation.

(9) To appropriate agencies, entities, and persons when: (a) The IRS suspects or has confirmed that the security or confidentiality of information in the system of records has been compromised; (b) the IRS has determined that as a result of the suspected or confirmed compromise there is a risk of harm to economic or property interests, identity theft or fraud, or harm to the security or integrity of this system or other systems or programs (whether maintained by the IRS or another agency or entity) that rely upon the compromised information; and (c) the disclosure made to such agencies, entities, and persons is reasonably necessary to assist in connection with the IRS' efforts to respond to the suspected or confirmed compromise and prevent, minimize, or remedy such harm.

POLICIES AND PRACTICES FOR STORING, RETRIEVING, ACCESSING, RETAINING, AND DISPOSING OF RECORDS IN THE SYSTEM:

STORAGE:

Paper records and electronic media.

RETRIEVABILITY:

Records are retrieved by the name of the individual(s) to whom they pertain. If there are multiple parties to a proceeding, then the record is generally retrieved only by the identity of the first listed person in the complaint or other document.

SAFEGUARDS:

Access controls are not less than those published in IRM 10.8, Information Technology (IT) Security, and IRM 10.2, Physical Security Program.

RETENTION AND DISPOSAL:

Records are retained and disposed of in accordance with the records control schedules applicable to the records of the Office of Chief Counsel, Document 12990, Record Control Schedules 13 through 15 (formerly IRM 1.15.13 through 1.15.15).

SYSTEM MANAGER(S) AND ADDRESS:

Associate Chief Counsel (Finance & Management), National Office. See the IRS Appendix below for the address.

NOTIFICATION PROCEDURE:

Individuals seeking notification and access to any record contained in this system of records, or seeking to contest its content, may inquire in writing in accordance with instructions appearing at 31 CFR part 1, appendix B. Written inquiries should be addressed to Chief, Disclosure and Litigation Support Branch, Legal Processing Division, IRS Office of Chief Counsel, CC:PA:LPD:DLS, 1111 Constitution Avenue NW., Washington, DC 20224. This system of records may contain records that are exempt from the notification, access, and contest requirements pursuant to 5 U.S.C. 552a(j)(2) or (k)(2). The IRS may assert 5 U.S.C. 552a(d)(5) as appropriate.

RECORD ACCESS PROCEDURES:

See ''Notification Procedure'' above.

CONTESTING RECORD PROCEDURES:

See ''Notification Procedure'' above. 26 U.S.C. 7852(e) prohibits Privacy Act amendment of tax records.

RECORD SOURCE CATEGORIES:

IRS employees; Congress; Department of the Treasury personnel; taxpayers and their representatives; other Federal agencies; witnesses; informants; state, local, tribal, and foreign governments, and other public authorities; parties to disputed matters of fact and law; other persons who communicate with the IRS; libraries to and from which inter-library loans are made; public sources such as telephone books, Internet Web sites, court documents, and real estate records.

EXEMPTIONS CLAIMED FOR THE SYSTEM:

Some of the records in this system are exempt from sections (c)(3)–(4); (d)(1)–(4); (e)(1)–(3); (e)(4)(G)–(I); (e)(5); (e)(8); (f) and (g) of the Privacy Act, pursuant to 5 U.S.C. 552a(j)(2). Some of the records in this system are exempt from sections (c)(3), (d)(1)–(4), (e)(1), (e)(4)(G)–(I), and (f) of the Privacy Act, pursuant to 5 U.S.C. 552a(j)(2) and 5 U.S.C. 552a(k)(2). See 31 CFR 1.36.

Treasury/IRS 90.006

SYSTEM NAME:

Chief Counsel Human Resources and Administrative Records—Treasury/IRS.

SYSTEM LOCATION:

All Chief Counsel offices. (See the IRS Appendix below for address.)

CATEGORIES OF INDIVIDUALS COVERED BY THE SYSTEM:

(1) Current and former employees of the Office of Chief Counsel;

(2) Applicants for employment in the Office of Chief Counsel;

(3) Tax Court witnesses whose expenses are paid by the IRS.

CATEGORIES OF RECORDS IN THE SYSTEM:

(1) Records relating to personnel actions and determinations made about an individual while employed with the Office of Chief Counsel. These records include the records maintained in current and former employees' Official Personnel Folders and Employee Performance Folders, in accordance with Office of Personnel Management (OPM)'s regulations and instructions, which are described in the notices of OPM's government-wide systems of records, OPM/GOVT–1 and OPM/GOVT–2, respectively. The records reflect employment qualifications; employment history (including performance improvement plan or discipline records); training and awards; reasonable accommodation and similar records potentially containing medical information; and other recognition. These records include data documenting reasons for personnel actions, decisions, or recommendations and background material leading to any personnel action (including adverse action).

(2) Records relating to payroll processing, such as employee name, date of birth, Social Security Number (SSN), home address, grade or rank, employing organization, timekeeper identity, salary, civil service retirement fund contributions, pay plan, number of hours worked, leave accrual rate, usage, and balances, deductions for Medicare and/or FICA, Federal, state and city tax withholdings, Federal Employees Governmental Life Insurance withholdings, Federal Employees Health Benefits withholdings, awards,

commercial garnishments, child support and/or alimony wage assignments, allotments, and Thrift Savings Plan contributions.

(3) Employee recruiting records for attorney and non-attorney Chief Counsel Employees (including application files, eligible applicant listings, and internal control records).

(4) Financial records such as travel expenses, notary public expenses, moving expenses, expenses of Tax Court witnesses, fees and expenses of expert witnesses, and miscellaneous expenses.

AUTHORITY FOR MAINTENANCE OF THE SYSTEM:

5 U.S.C. 301; 26 U.S.C. 7801 and 7803; and 31 U.S.C. 330.

PURPOSE:

To carry out personnel management responsibilities, including but not limited to: (1) Recommending or taking personnel actions such as appointments, promotions, separations (*e.g.*, retirements, resignations), reassignments, within-grade increases, disciplinary or adverse actions; (2) employee training, recognition, or reasonable accommodation; (3) processing payroll so as to ensure that each employee receives the proper pay and allowances; that proper deductions and authorized allotments are made from employees' pay; and that employees are credited and charged with the proper amount of leave; (4) recruitment and other hiring decisions; and (5) to maintain records of individually based non-payroll expenditures such as expert witness and contractor expenses necessary to the operations of the Office. The records may also be used as a basis for staffing and budgetary planning and control, organizational planning, and human resource utilization.

ROUTINE USES: OF RECORDS MAINTAINED IN THE SYSTEM, INCLUDING CATEGORIES OF USERS AND THE PURPOSES OF SUCH USES:

Disclosure of returns and return information may be made only as provided by 26 U.S.C. 6103. All other records may be used as described below if the IRS deems that the purpose of the disclosure is compatible with the purpose for which the IRS collected the records, and no privilege is asserted. Accordingly, the IRS may:

(1) Disclose information to the Department of Justice (DOJ) when seeking legal advice, or for use in any proceeding, or in preparation for any proceeding, when: (a) The IRS or any component thereof; (b) any IRS employee in his or her official capacity; (c) any IRS employee in his or her individual capacity if the IRS or the DOJ has agreed to provide representation for the employee; or (d) the United States is a party to, has an interest in, or is likely to be affected by the proceeding, and the IRS determines that the records are both relevant and necessary to the proceeding or advice sought. Information may be disclosed to the adjudicative body to resolve issues of relevancy, necessity, or privilege pertaining to the information.

(2) Disclose information in a proceeding (including discovery) before a court, administrative tribunal, or other adjudicative body when: (a) The IRS or any component thereof; (b) any IRS employee in his or her official capacity; (c) any IRS employee in his or her personal capacity if the IRS or the DOJ has agreed to provide representation for the employee; or (d) the United States is a party to, has an interest in, or is likely to be affected by, the proceeding, and the IRS or the DOJ determines that the information is relevant and necessary to the proceeding. Information may be disclosed to the adjudicative body to resolve issues of relevancy, necessity, or privilege pertaining to the information.

(3) Disclose information to a court, authorized official acting pursuant to a court order or state or local law, a state agency, or the office of a bankruptcy trustee, for the purpose of implementing a garnishment or wage assignment order.

(4) Disclose information to all individuals, and/or a court, adjudicative body, or other administrative body, where multiple related individuals are represented before the Service by one attorney, and a potential or actual conflict of interest arises, and the attorney fails to provide adequate confirmation to the Service that full disclosure of the conflict of interest situation has been made to all taxpayers and that all agree to the representation.

(5) Disclose information to the defendant in a criminal prosecution, the Department of Justice, or a court of competent jurisdiction where required in criminal discovery or by the Due Process Clause of the Constitution.

(6) Disclose information to the parties and to arbitrators, the Federal Labor Relations Authority, including the Office of the General Counsel of that authority, the Federal Service Impasses Board and the Federal Mediation and Conciliation Service in labor management matters.

(7) Disclose the results of a drug test performed at the work site, as provided by section 503 of the Supplemental Appropriations Act of 1987, Pub. L. 100–71, (101 Stat. 391, 468–471).

(8) Disclose information to a former employee of the IRS to the extent necessary to refresh their recollection for official purposes when the IRS requires information and/or consultation assistance from the former employee regarding a matter within that individual's former area of responsibility.

(9) Disclose information to third parties during the course of an investigation to the extent necessary to obtain information pertinent to the investigation.

(10) Disclose information to a contractor hired by the IRS, including an expert witness or a consultant, to the extent necessary for the performance of a contract.

(11) Disclose pertinent information to a Federal, state, local, or tribal agency, or other public authority responsible for implementing, enforcing, investigating, or prosecuting the violation of a statute rule, regulation, order, or license, when a record on its face, or in conjunction with other records, indicates a potential violation of law or regulation and the information disclosed is relevant to any regulatory, enforcement, investigative, or prosecutorial responsibility of the receiving authority.

(12) Disclose information to a Federal, state, local, or tribal agency, or other public authority that has requested information relevant or necessary to hiring or retaining an employee, or issuing or continuing a contract, security clearance, license, grant, or other benefit.

(13) To the extent consistent with the American Bar Association's Model Rules of Professional Conduct, Rule 4.2, disclose to any person the fact that his chosen legal representative may not be authorized to represent him before the IRS.

(14) Disclose information to a public, quasi-public, or private professional authority, agency, organization, or association, with which individuals covered by this system of records may be licensed by, subject to the jurisdiction of, a member of, or affiliated with, including but not limited to state bars and certified accountancy boards, to assist such authorities, agencies, organizations and associations in meeting their responsibilities in connection with the administration and maintenance of standards of integrity, conduct, and discipline.

(15) Disclose information to foreign governments in accordance with international agreements.

(16) Disclose information to officials of labor organizations recognized under 5 U.S.C. Chapter 71 when relevant and

necessary to their duties of exclusive representation.

(17) Disclose information to the news media as described in the IRS Policy Statement P–1–183, News Coverage to Advance Deterrent Value of Enforcement Activities Encouraged, IRM 1.2.1.2.41.

(18) Disclose information regarding financial disclosure statements to the IRS, which makes the statements available to the public as required by law.

(19) Disclose information to other Federal agencies holding funds of an individual for the purpose of collecting a liability owed by the individual.

(20) Disclose information to the Joint Board of Actuaries in enrollment and disciplinary matters.

(21) Disclose information to the Office of Personnel Management, Merit Systems Protection Board, the Office of Special Counsel, and the Equal Employment Opportunity Commission in personnel, discrimination, and labor management matters.

(22) Disclose information to the General Services Administration in property management matters.

(23) Disclose information to the Office of Government Ethics in conflict of interest, conduct, financial statement reporting, and other ethics matters.

(24) Disclose information to appropriate agencies, entities, and persons when: (a) The IRS suspects or has confirmed that the security or confidentiality of information in the system of records has been compromised; (b) the IRS has determined that as a result of the suspected or confirmed compromise there is a risk of harm to economic or property interests, identity theft or fraud, or harm to the security or integrity of this system or other systems or programs (whether maintained by the IRS or another agency or entity) that rely upon the compromised information; and (c) the disclosure made to such agencies, entities, and persons is reasonably necessary to assist in connection with the IRS' efforts to respond to the suspected or confirmed compromise and prevent, minimize, or remedy such harm.

(25) Disclose information to the General Services Administration Board of Contract Appeals, the Government Accountability Office, and other Federal agencies that address contracting issues in connection with disputes and protests of procurement actions and decisions.

DISCLOSURE TO CONSUMER REPORTING AGENCIES:

Disclosures of debt information concerning a claim against an individual may be made from this system to consumer reporting agencies as defined in the Fair Credit Reporting Act, 15 U.S.C. 1681a(f) or the Federal Claims Collection Act of 1966, 31 U.S.C. 3701(a)(3).

POLICIES AND PRACTICES FOR STORING, RETRIEVING, ACCESSING, RETAINING, AND DISPOSING OF RECORDS IN THE SYSTEM:

STORAGE:

Paper records and electronic media.

RETRIEVABILITY:

Records are generally retrieved by the name or taxpayer identity number of the individual to whom they apply. Records pertaining to expert witnesses may also be retrieved by the name of a party to the proceeding for which the expert was retained.

SAFEGUARDS:

Access controls are not less than those published in IRM 10.8, Information Technology (IT) Security, and IRM 10.2, Physical Security Program.

RETENTION AND DISPOSAL:

Records are retained and disposed of in accordance with the records control schedules applicable to the records of the Office of Chief Counsel, Document 12990, Record Control Schedules 13 through 15 (formerly IRM 1.15.13 through 1.15.15), and to personnel records, Document 12829, Record Control Schedules 38 and 39 (formerly IRM 1.15.38 and 1.15.39).

SYSTEM MANAGER(S) AND ADDRESS:

The Division Counsel/Associate Chief Counsel is the system manager of records in their respective offices. See the IRS Appendix below for addresses.

NOTIFICATION PROCEDURE:

Individuals seeking notification and access to any record contained in this system of records, or seeking to contest its content, may inquire in writing in accordance with instructions appearing at 31 CFR part 1, appendix B. Inquiries should be addressed as in ''Record Access Procedures'' below. This system of records may contain records that are exempt from the notification, access, and contest requirements pursuant to 5 U.S.C. 552a(k)(2). The IRS may assert 5 U.S.C. 552a(d)(5) as appropriate.

RECORD ACCESS PROCEDURES:

Individuals seeking access to any record contained in this system of records, or seeking to contest its content, may inquire in accordance with instructions appearing at 31 CFR part 1, subpart C, appendix B. Inquiries should be addressed to the Disclosure Office for Privacy Act requests listed in the IRS Appendix below.

CONTESTING RECORD PROCEDURES:

See ''Notification Procedure'' above. 26 U.S.C. 7852(e) prohibits Privacy Act amendment of tax records.

RECORD SOURCE CATEGORIES:

Department of the Treasury personnel; Tax Court and expert witnesses; other Federal agencies; witnesses; state, local, tribal, and foreign governments, and other public authorities; references provided by the applicant, employee, or expert witness; former employers; public records such as telephone books, Internet Web sites, court documents, and real estate records.

EXEMPTIONS CLAIMED FOR THE SYSTEM:

Some of the records in this system are as exempt from sections (c)(3), (d)(1)–(4), (e)(1), (e)(4)(G)–(I), and (f) of the Privacy Act, pursuant to 5 U.S.C. 552a(k)(5). See 31 CFR 1.36.

IRS Appendix

This appendix contains the addresses of Treasury/IRS system locations along with the title of the principal system manager(s). Internal Revenue Service (IRS) system locations are geographically dispersed through field offices. Additional information regarding the structure and locations of the IRS is available on the Internet at *www.irs.gov*. Select the ''About the IRS'' tab or contact one of the Disclosure Offices.

Internal Revenue Service Disclosure Office for Privacy Act Requests

Access and amendment requests for records maintained in IRS systems should be marked ''Privacy Act Request'' on the outside and mailed to the following address: Internal Revenue Service, Disclosure Scanning Operation—Stop 93A, Post Office Box 621506, Atlanta, GA 30362–3006.

IRS System Locations

The National Office of the IRS and the address for the following systems managers is: 1111 Constitution Avenue NW., Washington, DC. The listing below is arranged according to organizational lines. Any exception to the location of an office is indicated accordingly.

Commissioner, Internal Revenue Service
- Chief of Staff, Office of the Secretariat
- Chief, Communications and Liaison
- Chief, Equal Employment Opportunity and Diversity

Director, Research, Analysis & Statistics
National Taxpayer Advocate
Chief, Appeals, 999 North Capitol Street NW., Washington, DC
Director, Strategy & Finance
Director, Technical Services
Director, Field Operations—East
Director, Field Operations—West
Deputy Commissioner Operations Support
Chief Technology Officer
Chief Financial Officer
Chief Human Capital Officer
Chief, Agency Wide Shared Services
Director, Privacy, Governmental Liaison and Disclosure
Deputy Commissioner for Services & Enforcement
Division Commissioner, Large Business & International Division (LB&I), 9th & H Street, Washington, DC
Service & Enforcement Office Locations:
Division Commissioner, Small Business/Self-Employed (SB/SE)
Division Commissioner, Tax Exempt and Government Entities (TE/GE) Division, 999 North Capitol Street NE., Washington, DC
Division Commissioner, Wage and Investment (W&I), 401 W Peachtree Street, Atlanta, GA
Chief, Criminal Investigation
Director, Office of Professional Responsibility
Director, Return Preparer Office
Director, Affordable Care Act Office
Director, Whistleblower Office
Large Business & International (LB&I), 9th & H Street, Washington, DC
Deputy Division Commissioner, Domestic
Deputy Division Commissioner, International
Director, Management & Finance
Director, Business Systems Planning
Director, Planning, Analysis, Inventory and Research
Director, Division Planning, Oversight Reporting & Liaison
Director, Management & Finance
Director, Equity, Diversity & Inclusion
Director, Pre-Filing and Technical Guidance
Director, Shared Support
LB&I Industry Directors:
Industry Director, Communications, Technology & Media, 1301 Clay Street, Oakland, CA
Industry Director, Financial Services, 290 Broadway, New York, NY
Industry Director, Global High Wealth
Industry Director, Heavy Manufacturing and Pharmaceuticals, 111 Wood Avenue South, Iselin, NJ
Industry Director, Natural Resources and Construction, 1919 Smith Street, Houston, TX
Industry Director, Retailers, Food, Transportation, and Healthcare, 1901 Butterfield Road, Downers Grove, IL
LB&I Overseas Offices:
Frankfort, Germany—Internal Revenue Service, c/o U.S. Consulate Frankfort, Unit 7900, Box 6600, DPO AE 09213
London, England—Internal Revenue Service, E/IRS—U.S. Embassy, Unit 8400, Box 44, DPO AE 09498–0044
Plantation, Florida (covers Mexico, Central & South America, Caribbean)—IRS, Plantation, 7850 SW., 6th Court, Plantation, FL
Paris, France—Internal Revenue Service, Unit 9200, DPO AE 09777
Small Business/Self-Employed
Director, Communications and Liaison
Director, Collection
Director, Compliance Services, Campus Operations
Director, EEO
Director, Examination
Director, Fraud/BSA
Director, Specialty Programs
SB/SE Field Area Offices:
Collection Area Directors:
North Atlantic, 290 Broadway, New York, NY
South Atlantic, 5000 Ellin Road, Lanham, MD
Central Area, 477 Michigan Avenue, Detroit, MI
Midwest Area, 211 West Wisconsin Avenue, Milwaukee, WI
Gulf States Area, 801 Broadway, Nashville, TN
Western Area, 915 Second Avenue, Seattle, WA
Southwest Area, 2400 Avila Road, Laguna Niguel, CA
Examination Area Directors
North Atlantic, 15 New Sudbury Street, Boston, MA
Central Area, 600 Arch Street, Philadelphia, PA
South Atlantic, 400 W. Bay, Jacksonville, FL
Midwest, 316 N. Robert, St. Paul, MN
Gulf States, 2600 Citiplace, Baton Rouge, LA
Western, 1900 Broadway, Denver, CO
Southwest Area, 300 North Los Angeles Street, Los Angeles, CA
Tax Exempt & Government Entities, 999 North Capitol Street NW., Washington, DC
Director, Employee Plans
Director, Exempt Organizations
Director, Government Entities
Director, Shared Services
Director, Business Systems Planning
Director, Research and Analysis
Director, Communications and Liaison
Director, Finance
Director, Human Resources
Director, Strategic Planning
Director, Equity, Diversity and Inclusion
Wage & Investment, 401 West Peachtree Street, Atlanta, GA
Director, Return Integrity & Compliance Services
Director, Strategy & Finance
Director, Equity, Diversity and Inclusion
Director, Business Modernization Office
Director, Human Capital
Director, Customer Assistance, Relationships and Education
Director, Customer Account Services
Director, Communications & Liaison
Criminal Investigation
Director, Operations Policy and Support
Director, International Operations
Director, Strategy
Director, Refund Crimes
Director, CI Technology Operations & Investigative Services
CI Directors of Field Operations (DFO):
DFO, Western Area
DFO, Southern Area
DFO, Northern Area
Information Technology Office:
Chief Technology Officer
Deputy Chief Information Officer (CIO), Operations
Director, Management Services
Associate CIO, Strategy and Planning
Associate CIO, Cybersecurity
Associate CIO, Enterprise Services
Associate CIO, Enterprise Operations
Associate CIO, Affordable Care Act
Associate CIO, User Network Services
Associate CIO, Applications Development
Associate CIO, Enterprise Information Technology Program Management Office
Computing Centers:
Martinsburg Computing Center, Martinsburg, WV
Detroit Computing Center, 985 Michigan Avenue, Detroit, MI
Finance Office
Chief Financial Officer (CFO)
Associate CFO for Corporate Budget
Associate CFO for Financial Management
Associate CFO for Corporate Planning and Internal Control
Human Capital Office
Director, Engagement and Operational Improvement
Director, Leadership, Education and Delivery Services
Director, WorkLife, Benefits & Performance
Director, Employment Talent & Security
Director, Planning, Research &

Support
Director, Workforce Relations Division
Agency-Wide Shared Services
Director, Employee Support Services
Director, Procurement
Director, Facilities Management and Security Services
Director, Resources & Operations Management
Privacy, Governmental Liaison and Disclosure
Director, Governmental Liaison, Disclosure and Safeguards
Director, Information and Records Protection
Director, Privacy Policy and Compliance
Chief Counsel System Locations:

The National Offices of the Chief Counsel for the Internal Revenue Service are located at: 1111 Constitution Avenue NW., Washington, DC. Offices at this address include:

Chief Counsel
Deputy Chief Counsel (Operations)
Deputy Chief Counsel (Technical)
Special Counsel to the National Taxpayer Advocate
Associate Chief Counsel (Corporate), (Financial Institutions & Products), (Finance & Management), (General Legal Services), (International), (Income Tax & Accounting), (Procedure & Administration), (Pass throughs & Special Industries), and (Tax Exempt & Government Entities)
Associate Chief Counsel/Division Counsel (Criminal Tax)
Division Counsel (Wage & Investment)
Division Counsel (Large Business & International), National Office, 801 9th St. NW., Washington, DC.
Division Counsel (Small Business/Self-Employed) National Office, 5000 Ellin Road, Lanham, MD.
Area Counsel Offices (Alphabetical by State)

Various components of Chief Counsel may have offices at the same Area Counsel office location. The abbreviations following each address indicate the Chief Counsel divisions having offices at that location. The abbreviations represent the following offices:

CT—Office of the Division Counsel/Associate Chief Counsel (Criminal Tax)
GLS—Office of the Associate Chief Counsel (General Legal Services)
LB&I—Office of the Division Counsel (Large Business & International)
SB/SE—Office of the Division Counsel (Small Business/Self-Employed)
TE/GE—Office of the Division Counsel (Tax Exempt & Government Entities)

Note: Matters involving taxpayers falling under the jurisdiction of the Office of Division Counsel (Wage & Investment) are coordinated by area SB/SE offices.

801 Tom Martin Drive, Birmingham, AL. (SB/SE)
4041 N. Central Avenue, Phoenix, AZ. (CT, LB&I, SB/SE)
24000 Avila Road, Laguna Niguel, CA. (LB&I, SB/SE)
300 N. Los Angeles Street, Los Angeles, CA. (CT, LB&I, SB/SE, TE/GE)
1301 Clay Street, Oakland, CA. (LB&I)
4330 Watt Avenue, Sacramento, CA. (SB/SE)
701 B Street, San Diego, CA. (CT, LB&I, SB/SE)
100 First Street, San Francisco, CA. (CT, GLS, LB&I, SB/SE)
55 South Market Street, San Jose, CA. (LB&I, SB/SE)
950 Hampshire Road, East Pavilion, Thousand Oaks, CA. (SB/SE, TE/GE)
333 East River Drive, Commerce Center One, East Hartford, CT. (CT, LB&I, SB/SE)
600 17th Street, Denver, CO. (CT, LB&I, SB/SE, TE/GE)
455 Massachusetts Avenue NW., Washington, DC (LB&I, SB/SE)
400 West Bay Street, Jacksonville, FL. (CT, LB&I, SB/SE)
1000 South Pine Island Road, Plantation, FL. (CT, LB&I, SB/SE)
51 SW. First Avenue, Miami, FL. (CT, LB&I, SB/SE)
401 West Peachtree Street NW., Atlanta, GA. (CT, GLS, LB&I, SB/SE)
300 Ala Moana Boulevard, Honolulu, HI. (SB/SE)
200 West Adams Street, Chicago, IL. (CT, GLS, LB&I, SB/SE, TE/GE)
1901 Butterfield Road, Downers Grove, IL. (LB&I)
575 N. Pennsylvania Street, Indianapolis, IN. (CT, SB/SE)
462 S. Fourth Street, Louisville, KY. (CT, SB/SE)
600 South Maestri Place, New Orleans, LA. (CT, SB/SE)
31 Hopkins Plaza, Baltimore, MD. (SB/SE, TE/GE)
10 Causeway Street, Boston, MA. (CT, LB&I, SB/SE)
500 Woodward Avenue, Detroit, MI. (CT, LB&I, SB/SE)
380 Jackson Street, St. Paul, MN. (CT, LB&I, SB/SE)
2345 Grand Boulevard, Kansas City, MO. (LB&I, SB/SE)
1222 Spruce Street, St. Louis, MO. (CT, SB/SE)
4905 Koger Blvd., Greensboro, NC (CT, SB/SE)
1616 Capitol Avenue, Omaha, NE. (SB/SE)
110 City Parkway, Las Vegas, NV. (CT, SB/SE)
1085 Raymond Boulevard, Newark, NJ. (CT, LB&I, SB/SE)
300 Pearl Street, Olympic Towers, Buffalo, NY. (CT, LB&I, SB/SE)
33 Maiden Lane, New York, NY. (CT, GLS, LB&I, SB/SE)
1600 Stewart Avenue, Westbury, NY. (CT, LB&I, SB/SE, TE/GE)
312 Elm Street, Cincinnati, OH. (CT, LB&I, SB/SE)
1375 East Ninth Street, Cleveland, OH. (CT, SB/SE)
55 North Robinson Street, Oklahoma City, OK. (LB&I, SB/SE)
1220 SW Third Avenue, Portland, OR. (CT, SB/SE)
701 Market Street, Philadelphia, PA. (CT, LB&I, SB/SE)
1000 Liberty Avenue, Pittsburgh, PA. (SB/SE)
810 Broadway, Nashville, TN. (LB&I, SB/SE)
300 East 8th Street, Austin, TX. (CT, SB/SE)
4050 Alpha Road, Dallas, TX. (CT, GLS, LB&I, SB/SE, TE/GE)
8701 South Gessner Street, Houston, TX. (CT, LB&I, SB/SE)
1919 Smith Street, Houston, TX. (LB&I)
150 Social Hall Avenue, Salt Lake City, UT. (SB/SE)
400 North 8th Street, Richmond, VA. (CT, LB&I, SB/SE)
915 Second Avenue, Seattle, WA. (LB&I, SB/SE)
211 West Wisconsin Avenue, Milwaukee, WI. (LB&I, SB/SE)

[FR Doc. 2015–21980 Filed 9–4–15; 8:45 am]
BILLING CODE 4830–01–P

FEDERAL REGISTER

Vol. 80 Tuesday,

No. 173 September 8, 2015

Part IV

Environmental Protection Agency

40 CFR Parts 51, 60, 61 et al.

Revisions to Test Methods, Performance Specifications, and Testing Regulations for Air Emission Sources; Proposed Rule

ENVIRONMENTAL PROTECTION AGENCY

40 CFR Parts 51, 60, 61, and 63

[EPA–HQ–OAR–2014–0292; FRL–9931–50–OAR]

RIN 2060–AS34

Revisions to Test Methods, Performance Specifications, and Testing Regulations for Air Emission Sources

AGENCY: Environmental Protection Agency (EPA).

ACTION: Proposed rule.

SUMMARY: This action proposes technical and editorial corrections and revisions to regulations related to source testing of emissions. This proposed rule will make corrections and updates to testing provisions that contain inaccuracies and outdated procedures, and provide alternatives to existing testing regulations. These revisions will improve the quality of data and provide testers flexibility to use recently-approved alternative procedures. Many of these changes were suggested by testers and other end-users, and they will not impose new substantive requirements on source owners or operators.

DATES: Comments must be received on or before November 9, 2015.

Public Hearing. If anyone contacts the Environmental Protection Agency (EPA) by September 18, 2015 requesting to speak at a public hearing, a hearing will be held on October 8, 2015.

ADDRESSES: Submit your comments, identified by Docket ID No. EPA–HQ–OAR–2014–0292, by one of the following methods:

- *Federal eRulemaking Portal: www.regulations.gov*. Follow the on-line instructions for submitting comments.
- *Email: a-and-r-docket@epa.gov*. Include docket ID No. EPA–HQ–OAR–2014–0292 in the subject line of the message.
- *Fax:* (202) 566–9744.
- *Mail:* Attention Docket No. EPA–HQ–OAR–2014–0292, Environmental Protection Agency, Mailcode: 28221T, 1200 Pennsylvania Ave. NW., Washington, DC 20460.
- *Hand Delivery:* Docket No. EPA–HQ–OAR–2014–0292, EPA Docket Center, Public Reading Room, EPA WJC West Building, Room 3334, 1301 Constitution Ave. NW., Washington, DC 20460. Such deliveries are only accepted during the Docket's normal hours of operation, and special arrangements should be made for deliveries of boxed information.

Instructions: Direct your comments to Docket ID No. EPA–HQ–OAR–2014–0292. The EPA's policy is that all comments received will be included in the public docket without change and may be made available online at *http://www.regulations.gov*, including any personal information provided, unless the comment includes information claimed to be Confidential Business Information (CBI) or other information whose disclosure is restricted by statute. Do not submit information that you consider to be CBI or otherwise protected through *www.regulations.gov* or email. The *www.regulations.gov* Web site is an ''anonymous access'' system, which means the EPA will not know your identity or contact information unless you provide it in the body of your comment. If you send an email comment directly to the EPA without going through *www.regulations.gov*, your email address will be automatically captured and included as part of the comment that is placed in the public docket and made available on the Internet. If you submit an electronic comment, the EPA recommends that you include your name and other contact information in the body of your comment and with any disk or CD–ROM you submit. If the EPA cannot read your comment due to technical difficulties and cannot contact you for clarification, the EPA may not be able to consider your comment. Electronic files should avoid the use of special characters, any form of encryption, and be free of any defects or viruses.

Docket: All documents in the docket are listed in the *www.regulations.gov* index. Although listed in the index, some information is not publicly available, *e.g.,* CBI or other information whose disclosure is restricted by statute. Certain other material, such as copyrighted material, will be publicly available only in hard copy. Publicly available docket materials are available either electronically in *www.regulations.gov* or in hard copy at the Revisions to Test Methods and Testing Regulations Docket, EPA/DC, EPA WJC West Building, Room 3334, 1301 Constitution Ave. NW., Washington, DC. The Public Reading Room is open from 8:30 a.m. to 4:30 p.m., Monday through Friday, excluding legal holidays. The telephone number for the Public Reading Room is (202) 566–1744, and the telephone number for the EPA Docket Center is (202) 566–1742.

FOR FURTHER INFORMATION CONTACT: Ms. Lula H. Melton, Office of Air Quality Planning and Standards, Air Quality Assessment Division (E143–02), Environmental Protection Agency, Research Triangle Park, NC 27711; telephone number: (919) 541–2910; fax number: (919) 541–0516; email address: *melton.lula@epa.gov*.

SUPPLEMENTARY INFORMATION:

The supplementary information in this preamble is organized as follows:

I. General Information
A. Does this action apply to me?
B. What should I consider as I prepare my comments for the EPA?
C. Where can I get a copy of this document?
II. Background
III. Summary of Proposed Amendments
A. Appendix M to Part 51
B. Method 201A of Appendix M to Part 51
C. Method 202 of Appendix M to Part 51
D. Appendix P to Part 51
E. General Provisions (Subpart A) Part 60
F. Standards of Performance for Stationary Spark Ignition Internal Combustion Engines (Subpart JJJJ) Part 60
G. Method 1 of Appendix A–1 to Part 60
H. Method 2 of Appendix A–1 to Part 60
I. Method 2G of Appendix A–2 to Part 60
J. Method 3C of Appendix A–2 to Part 60
K. Method 4 of Appendix A–3 to Part 60
L. Method 5 of Appendix A–3 to Part 60
M. Method 5H of Appendix A–3 to Part 60
N. Method 5I of Appendix A–3 to Part 60
O. Method 6C of Appendix A–4 to Part 60
P. Method 7E of Appendix A–4 to Part 60
Q. Method 10 of Appendix A–4 to Part 60
R. Methods 10A and 10B of Appendix A–4 to Part 60
S. Method 15 of Appendix A–5 to Part 60
T. Method 16C of Appendix A–6 to Part 60
U. Method 18 of Appendix A–6 to Part 60
V. Method 25C of Appendix A–7 to Part 60
W. Method 26 of Appendix A–8 to Part 60
X. Method 26A of Appendix A–8 to Part 60
Y. Method 29 of Appendix A–8 to Part 60
Z. Method 30A of Appendix A–8 to Part 60
AA. Method 30B of Appendix A–8 to Part 60
BB. Appendix B to Part 60—Performance Specifications
CC. Performance Specification 1 of Appendix B to Part 60
DD. Performance Specification 2 of Appendix B to Part 60
EE. Performance Specification 3 of Appendix B to Part 60
FF. Performance Specification 4A of Appendix B to Part 60
GG. Performance Specification 11 of Appendix B to Part 60
HH. Performance Specification 15 of Appendix B to Part 60
II. Performance Specification 16 of Appendix B to Part 60
JJ. Procedure 2 of Appendix F to Part 60
KK. General Provisions (Subpart A) Part 61
LL. Method 107 of Appendix B to Part 61
MM. General Provisions (Subpart A) Part 63
NN. Method 320 of Appendix A to Part 63
IV. Request for Comments
V. Statutory and Executive Order Reviews
A. Executive Order 12866: Regulatory Planning and Review and Executive

Order 13563: Improving Regulation and Regulatory Review
B. Paperwork Reduction Act (PRA)
C. Regulatory Flexibility Act (RFA)
D. Unfunded Mandates Reform Act (UMRA)
E. Executive Order 13132: Federalism
F. Executive Order 13175: Consultation and Coordination With Indian Tribal Governments
G. Executive Order 13045: Protection of Children From Environmental Health Risks and Safety Risks
H. Executive Order 13211: Actions Concerning Regulations That Significantly Affect Energy Supply, Distribution or Use
I. National Technology Transfer and Advancement Act and 1 CFR Part 51
J. Executive Order 12898: Federal Actions To Address Environmental Justice in Minority Populations and Low-Income Populations

I. General Information

A. Does this action apply to me?

The proposed amendments apply to industries that are already subject to the current provisions of parts 51, 60, 61, and 63. For example, Performance Specification 4A applies to municipal waste combustors and hazardous waste incinerators. We did not list all of the specific affected industries or their North American Industry Classification System (NAICS) codes herein since there are many affected sources. If you have any questions regarding the applicability of this action to a particular entity, consult either the air permitting authority for the entity or your EPA regional representative as listed in 40 CFR 63.13.

B. What should I consider as I prepare my comments for the EPA?

1. *Submitting CBI.* Do not submit this information to the EPA through *http://www.regulations.gov* or email. Clearly mark any of the information that you claim to be CBI. For CBI information in a disk or CD–ROM that you mail to the EPA, mark the outside of the disk or CD–ROM as CBI and then identify electronically within the disk or CD–ROM the specific information that is claimed as CBI. In addition to one complete version of the comment that includes information claimed as CBI, a copy of the comment that does not contain the information claimed as CBI must be submitted for inclusion in the public docket. Information so marked will not be disclosed except in accordance with procedures set forth in 40 CFR part 2.

2. *Tips for Preparing Your Comments.* When submitting comments, remember to:

- Follow directions—The agency may ask you to respond to specific questions or organize comments by referencing a Code of Federal Regulations (CFR) part or section number.
- Explain why you agree or disagree, suggest alternatives, and substitute language for your requested changes.
- Describe any assumptions and provide any technical information and/or data that you used.
- If you estimate potential costs or burdens, explain how you arrived at your estimate in sufficient detail to allow for it to be reproduced.
- Provide specific examples to illustrate your concerns, and suggest alternatives.
- Explain your views as clearly as possible, avoiding the use of profanity or personal threats.
- Make sure to submit your comments by the comment period deadline identified.

C. Where can I get a copy of this document?

In addition to being available in the docket, an electronic copy of this proposed rule will also be available on the Worldwide Web (WWW) through the Technology Transfer Network (TTN). Following signature, a copy of this proposed rule will be posted at the following address: *http://www.epa.gov/ttn/emc/*. The TTN provides information and technology exchange in various areas of air pollution control.

II. Background

The EPA has been cataloging errors and corrections, as well as revisions that are needed to test methods, performance specifications, and associated regulations in 40 CFR parts 51, 60, 61, and 63. The most recent final rule that updated and revised methods was published on February 27, 2014 (79 FR 11228). Many of the corrections and revisions herein have been brought to our attention by affected parties and end-users. The corrections and revisions consist primarily of typographical errors, technical errors in equations and diagrams, updates to procedures, and the addition of alternative equipment and methods the Agency has found acceptable to use.

III. Summary of Proposed Amendments

A. Appendix M to Part 51

In paragraph (4)(a) of appendix M to part 51, we propose to add Methods 30A and 30B to the list of methods not requiring the use of audit samples. Consistent with the criteria used in establishing the original list of methods for which no audit samples are required (75 FR 55636), Method 30A is an instrumental test method that already has sufficient calibration and quality assurance requirements. Method 30B has sufficient performance-based quality assurance measures including analysis of an independent calibration standard with each set of field samples.

B. Method 201A of Appendix M to Part 51

In Method 201A, the constant in equation 9, which is shown as 0.07657, will be corrected to 0.007657.

C. Method 202 of Appendix M to Part 51

In Method 202, we propose to add section 3.8 to incorporate ASTM E617–13 by reference. The first sentence in paragraph 8.5.4.3 will be revised by adding ''back half of the filterable PM filter holder.'' Section 9.10 erroneously states ''You must purge the assembled train as described in sections 8.5.3.2 and 8.5.3.3.'' The statement will be corrected to reference section 8.5.3. Sections 10.3 and 10.4 will be added to require calibration of the balance used to weigh impingers and to require a multipoint calibration of the analytical balance. During the most recent revision of Method 202, sections 11.2.2.1, 11.2.2.2, 11.2.2.3, 11.2.2.4 and figure 7 were inadvertently deleted and will be re-inserted into the method.

D. Appendix P to Part 51

In appendix P to part 51, section 3.3 erroneously refers to section 2.1 of Performance Specification 2 of appendix B of part 60. The citation will be corrected to section 6.1. Section 5.1.3 erroneously refers to paragraph 4.1.4, which does not exist; the text will be changed to reflect the correct references to paragraphs 3.1.4 and 3.1.5.

E. General Provisions (Subpart A) Part 60

In the General Provisions of part 60, § 60.8(f) will be revised to require the reporting of specific emissions test data in test reports. These data elements will be required regardless of whether the report is submitted electronically or in paper format. We are proposing these modifications to ensure that emissions test reporting includes all data necessary to assess and assure the quality of the reported emissions data and appropriately describes and identifies the specific unit covered by the emissions test report. Section 60.17(g) will be revised to add ASTM D6911–15 to the list of incorporations by reference and to re-number the remaining consensus standards that are incorporated by reference in alpha-numeric order.

F. Standards of Performance for Stationary Spark Ignition Internal Combustion Engines (Subpart JJJJ) Part 60

In Table 2 of subpart JJJJ, Methods 18 and 320 and ASTM D 6348–03 will be deleted as test method options for measuring VOC, and only Method 25A will be allowed.

G. Method 1 of Appendix A–1 to Part 60

In Method 1, section 11.2.1.2, the word ''istances'' will be changed to ''distances'' in the second sentence. In addition, there are two figures labeled Figure 1–2. The second figure will be deleted.

H. Method 2 of Appendix A–1 to Part 60

In Method 2, instructions are given for conducting S-type pitot calibrations. Currently, the same equipment is commonly used for both Methods 2 and 2G (same S-type pitot), but the calibration procedure is slightly different in each method. Other key pieces that enhance the quality assurance/quality control (QA/QC) of the calibrations will be added to Method 2, and the amount of blockage allowed will be reduced to tighten up calibration accuracy. To address these issues, changes will be made to sections 6.7, 10.1.2.3, 10.1.3.4, 10.1.3.7, and 10.1.4.1.3 of Method 2. Section 10.1.4.3 inadvertently references section 10.1.4.4. The reference will be corrected to section 12.4.4. The side of Figure 2–10 labeled (b) will be deleted, and the label (a) will be removed from the figure.

I. Method 2G of Appendix A–2 to Part 60

In Method 2G, instructions are given for conducting S-type pitot calibrations. Currently the same equipment is commonly used for both Methods 2 and 2G (same S-type pitot), but the calibration procedure is slightly different in each method. Other key pieces that enhance the QA/QC of the calibrations will be added to the method, and the amount of blockage allowed will be reduced to tighten up calibration accuracy. Changes will be made to sections 6.11.1, 6.11.2, 10.6.6, and 10.6.8 of Method 2G to address these issues.

J. Method 3C of Appendix A–2 to Part 60

In Method 3C, section 6.3 will be revised to add subsections (6.3.1, 6.3.2, 6.3.3, 6.3.4, and 6.3.5) that clarify the requirements necessary to check analyzer linearity.

K. Method 4 of Appendix A–3 to Part 60

In Method 4, section 10.3 (Field Balance) will be added to require calibration of the balance used to weigh impingers. Section 12.2.5 will be added, which provides another option for calculating the approximate moisture content. Section 16.4 will be revised to clarify that a fuel sample must be taken and analyzed to develop F-factors required by the alternative. Also, in section 16.4, percent relative humidity is inadvertently defined as ''calibrated hydrometer acceptable''; the word ''hydrometer'' will be replaced with ''hygrometer.''

L. Method 5 of Appendix A–3 to Part 60

In Method 5, we erroneously finalized the reference to the Isostack metering system in 79 FR 11228. Therefore, we will remove this reference from section 6.1.1.9 and continue to issue broadly applicable test method determinations or letters of assessments regarding whether specific alternative metering equipment meets the specifications of the method as was our intent in the ''Summary of Comments and Responses on Revisions to Test Methods and Testing Regulations'' (EPA–HQ–OAR–2010–0114–0045). The phrase ''after ensuring that all joints have been wiped clean of silicone grease'' will be removed from section 8.7.6.2.5. Sections 10.7 and 10.8 will be added to require calibration of the balance used to weigh impingers and to require a multipoint calibration of the analytical balance.

M. Method 5H of Appendix A–3 to Part 60

In Method 5H, sections 10.4 and 10.5 will be added to require calibration of the balance used to weigh impingers and to require a multipoint calibration of the analytical balance.

N. Method 5I of Appendix A–3 to Part 60

In Method 5I, sections 10.1 and 10.2 will be added to require calibration of the balance used to weigh impingers and to require a multipoint calibration of the analytical balance.

O. Method 6C of Appendix A–4 to Part 60

In Method 6C, due to numerous comments and questions, the language detailing the methodology for performing interference checks in section 8.3 will be revised to clarify and streamline the procedure. We continue to believe that the interference test need only be repeated if major components are replaced with different model parts.

P. Method 7E of Appendix A–4 to Part 60

In Method 7E, section 8.1.2 will be revised to be consistent with the requirements in Performance Specification 2. In cases where the 3-point sampling is used, the three points along the measurement line exhibiting the highest average concentration during the stratification test will be 0.4, 1.2, and 2.0 meters instead of 0.4, 1.0, and 2.0 meters.

Also, in Method 7E, due to numerous comments and questions, the language in section 8.2.7 detailing the methodology for performing interference checks will be revised to clarify and streamline the procedure. We continue to believe that the interference test need only be repeated if major components are replaced with different model parts. Also, the word ''equations'' will be replaced with ''equation'' in the sentence in section 12.8 that reads ''If desired, calculate the total NO_X concentration with a correction for converter efficiency using equation 7E–8.''

Q. Method 10 of Appendix A–4 to Part 60

In Method 10, sections 6.2.5 and 8.4.2 will be revised, and section 6.2.6 will be added to clarify the types of sample tanks allowed for integrated sampling.

R. Methods 10A and 10B of Appendix A–4 to Part 60

Methods 10A and 10B will be revised to allow the use of sample tanks as an alternative to flexible bags for sample collection.

S. Method 15 of Appendix A–5 to Part 60

In Method 15, section 8.3.2 will be revised to clarify the calibrations that represent partial calibration.

T. Method 16C of Appendix A–6 to Part 60

In Method 16C, equation 16–1C will be revised to replace C_v (manufacturer certified concentration of a calibration gas in ppmv SO_2) in the denominator with CS (calibration span in ppmv). Therefore, the definition of CS will be added to the nomenclature in section 12.1, and the definition of C_v will be deleted from the nomenclature in section 12.1.

U. Method 18 of Appendix A–6 to Part 60

In Method 18, section 8.2.1.5.2.3 will be removed because the requirement to analyze two field audit samples as described in section 9.2 has been moved to the General Provisions.

V. Method 25C of Appendix A–7 to Part 60

In Method 25C, section 9.1 incorrectly references section 8.4.1; this reference will be corrected to section 8.4.2. Section 11.2 will be deleted because the audit sample analysis is now covered under the General Provisions. The nomenclature will be revised in section 12.1, and equation 25C–2 will be revised in section 12.3. Sections 12.4, 12.5, 12.5.1, and 12.5.2 will be added to incorporate equations to correct sample concentrations for ambient air dilution.

W. Method 26 of Appendix A–8 to Part 60

In Method 26, section 13.3 will be revised to indicate the correct method detection limit.

X. Method 26A of Appendix A–8 to Part 60

In Method 26A, language will be added to section 4.3 indicating that dissociating chloride salts at elevated temperatures interfere with halogen acid measurement in this method, but maintaining particulate probe/filter temperatures at 120+/−14 °C (248+/−25 °F) minimizes this interference. Sections 6.1.7 and 8.1.5 will be revised to delete reference to other temperatures around the probe and filter holder during sampling as specified by the applicable subpart or approved by the Administrator for a particular application. Also, the error in ''. . . between 120 and 134 °C (248 and 275 °F . . .'') will be corrected to ''. . . between 120 and 134 °C (248 and 273 °F . . .'') in section 8.1.6.

Y. Method 29 of Appendix A–8 to Part 60

In Method 29, section 8.2.9.3 will be revised to require rinsing impingers containing permanganate with hydrogen chloride (HCl) to ensure consistency with the application of Method 29 across various stationary source categories and since there is evidence that HCl is needed to release the mercury (Hg) bound in the precipitate from the permanganate. Sections 10.4 and 10.5 will be added to require calibration of the balance used to weigh impingers and to require a multipoint calibration of the analytical balance.

Z. Method 30A of Appendix A–8 to Part 60

In Method 30A, the heading of section 8.1 will be changed from ''Sample Point Selection.'' to ''Selection of Sampling Sites and Sampling Points.''

AA. Method 30B of Appendix A–8 to Part 60

In Method 30B, the heading of section 8.1 will be changed from ''Sample Point Selection.'' to ''Selection of Sampling Sites and Sampling Points.'' In section 8.3.3.8, the reference to ASTM WK223 will be changed to ASTM D6911–15. ASTM WK223 was the draft standard that was available at the time that Method 30B was first promulgated; it has since been finalized to ASTM D6911–15.

BB. Appendix B to Part 60—Performance Specifications

In the index to appendix B to part 60, Performance Specification 16—Specifications and Test Procedures for Predictive Emission Monitoring Systems in Stationary Sources will be added.

CC. Performance Specification 1 of Appendix B to Part 60

In Performance Specification 1, paragraph 8.1(2)(i) will be revised to not limit the location of a continuous opacity monitoring system (COMS) to a point at least four duct diameters downstream and two duct diameters upstream from a control device or flow disturbance, but it will refer to paragraphs 8.1(2)(ii) and 8.1(2)(iii) for additional options.

DD. Performance Specification 2 of Appendix B to Part 60

In Performance Specification 2, the definition of span value will be revised in section 3.11. Also, in section 6.1.1, the data recorder language will be revised. In section 16.3.2, the characters ''|dverbar'' will be replaced with $\overline{d}$, which is the average difference between responses and the concentration/responses. In section 18, Table 2–2 and Figure 2–1 are attached to each other. Table 2–2 will be detached from Figure 2–1, and the figure will be labeled ''Calibration Drift Determination.''

EE. Performance Specification 3 of Appendix B to Part 60

In Performance Specification 3, we will revise section 13.2 to clarify how to calculate relative accuracy.

FF. Performance Specification 4A of Appendix B to Part 60

In Performance Specification 4A, we will revise the response time test procedure in sections 8.3 and 8.3.1. The language specifying that the response time is a check of the entire system was previously deleted. However, we have had several inquiries about this, and we believe that the entire system should be checked with the response time test procedure; therefore, we will put this requirement back into the performance specification. We will also revise section 13.3 because we have received information indicating that the response time of 1.5 minutes is too stringent; we will relax the response time requirement to 2.0 minutes.

GG. Performance Specification 11 of Appendix B to Part 60

In Performance Specification 11, equations 11–1 and 11–2 will be revised in section 12.1, and the response range will be used in lieu of the upscale value in section 13.1.

HH. Performance Specification 15 of Appendix B to Part 60

In Performance Specification 15, the statement ''An audit sample is obtained from the Administrator'' will be deleted from paragraph 9.1.2. Also, in Performance Specification 15, reserved sections 14.0 and 15.0 will be added.

II. Performance Specification 16 of Appendix B to Part 60

In Performance Specification 16, we will change Table 16–1 to make be consistent with conventional statistical applications; the two columns currently labeled ''n-1'' will be re-labeled ''n.'' We will also revise section 12.2.3 for selection of n-1 degrees of freedom.

JJ. Procedure 2 of Appendix F to Part 60

In Procedure 2, equations 2–2 and 2–3 in section 12.0 will be revised to correctly define the denominator when calculating calibration drift. Also, equation 2–4 in section 12.0 will be revised to correctly define the denominator when calculating accuracy.

KK. General Provisions (Subpart A) Part 61

Section 61.13(e)(1)(i) of the General Provisions of Part 61 will be revised to add Methods 30A and 30B to the list of methods not requiring the use of audit samples. Consistent with the criteria used in establishing the original list of methods for which no audit samples are required (75 FR 55636), Method 30A is an instrumental test method that already has sufficient calibration and QA requirements. Method 30B has sufficient performance-based QA measures including analysis of an independent calibration standard with each set of field samples.

LL. Method 107 of Appendix B to Part 61

In Method 107, the term ''Geon'' will be deleted from the heading in section 11.7.3.

MM. General Provisions (Subpart A) Part 63

The General Provisions of part 63, § 63.7(c)(2)(iii)(A) will be revised to add Methods 30A and 30B to the list of methods not requiring the use of audit samples. Consistent with the criteria used in establishing the original list of methods for which no audit samples are required (75 FR 55636), Method 30A will be added because it is an instrumental test method that already has sufficient calibration and QA requirements, and Method 30B will be added because it has sufficient performance-based QA measures including analysis of an independent calibration standard with each set of field samples.

Also in the General Provisions of part 63, § 63.7(g)(2) will be revised to require the reporting of specific emissions test data in test reports. These data elements will be required regardless of whether the report is submitted electronically or in paper format. We will make these revisions to ensure that emissions test reporting includes all data necessary to assess and assure the quality of the reported emissions data and appropriately describes and identifies the specific unit covered by the emissions test report.

NN. Method 320 of Appendix A to Part 63

In Method 320, sections 13.1, 13.4, and 13.4.1 will be revised to indicate the correct Method 301 reference.

IV. Request for Comments

The Agency is reviewing the adequacy of its current test methods in regard to sampling site selection and sampling point requirements. Emission gas flow patterns affect representative testing, and this is not addressed in many EPA test methods. Method 1 contains provisions for sampling point locations, traversing, and determination of cyclonic flow, and Method 7E was revised to contain procedures for determining gaseous stratification in 2006. However, there are currently no requirements in most methods for gaseous compounds to follow the Method 1 or 7E procedures.

Method 7E allows stratification to be assessed through either a 3- or 12-point traverse while measuring variations in either a pollutant or diluent concentration. The degree of stratification determines whether a single-point, 3-point, or 12-point traverse is used for the emissions test. There are no requirements to check for cyclonic flow in Method 7E.

We have some information that suggests deficiencies exist in the 3-point test in a number of cases and that at least a 5-point, dual axis test should be required. A summary of this information has been included in the docket for this action. We are also reconsidering the appropriateness of measuring variations in a diluent gas for the test instead of the regulated pollutant.

In this rule, we propose to update the General Provisions of parts 60, 61, and 63 to include evaluations of gas stratification and cyclonic flow with all compliance tests. The Agency solicits comments and data to aid in establishing effective and equitable procedures.

The Agency also requests comments on the proposed changes to the response time test in Performance Specification 4A. The Agency has received some information to suggest that a system response time test criteria of less than two minutes may be difficult to accomplish. Therefore, the Agency solicits comments and data to assist in establishing appropriate criteria.

V. Statutory and Executive Order Reviews

A. Executive Order 12866: Regulatory Planning and Review and Executive Order 13563: Improving Regulation and Regulatory Review

This action is not a ''significant regulatory action'' under the terms of Executive Order (E.O.) 12866 (58 FR 51735, October 4, 1993) and is, therefore, not subject to review under Executive Orders 12866 and 13563 (76 FR 3821, January 21, 2011).

B. Paperwork Reduction Act (PRA)

This action does not impose an information collection burden under the PRA. The amendments being proposed in this action to the test methods, performance specifications, and testing regulations do not add information collection requirements but make corrections and updates to existing testing methodology. In addition, the proposed amendments clarify performance testing requirements.

C. Regulatory Flexibility Act (RFA)

I certify that this action will not have a significant economic impact on a substantial number of small entities under the RFA. In making this determination, the impact of concern is any significant adverse economic impact on small entities. An agency may certify that a rule will not have a significant economic impact on a substantial number of small entities if the rule relieves regulatory burden, has no net burden or otherwise has a positive economic effect on the small entities subject to the rule. This proposed rule will not impose emission measurement requirements beyond those specified in the current regulations, nor does it change any emission standard. We have, therefore, concluded that this action will have no net regulatory burden for all directly regulated small entities.

D. Unfunded Mandates Reform Act (UMRA)

This action does not contain any unfunded mandate as described in UMRA, 2 U.S.C. 1531–1538, and does not significantly or uniquely affect small governments. The action imposes no enforceable duty on any state, local or tribal governments or the private sector.

E. Executive Order 13132: Federalism

This action does not have federalism implications. It will not have substantial direct effects on the states, on the relationship between the national government and the states, or on the distribution of power and responsibilities among the various levels of government.

F. Executive Order 13175: Consultation and Coordination With Indian Tribal Governments

This action does not have tribal implications, as specified in Executive Order 13175. This action simply corrects and updates existing testing regulations. Thus, Executive Order 13175 does not apply to this action.

G. Executive Order 13045: Protection of Children From Environmental Health Risks and Safety Risks

The EPA interprets Executive Order 13045 as applying only to those regulatory actions that concern environmental health or safety risks that the EPA has reason to believe may disproportionately affect children, per the definition of ''covered regulatory action'' in section 2–202 of the Executive Order. This action is not subject to Executive Order 13045 because it does not concern an environmental health risk or safety risk.

H. Executive Order 13211: Actions Concerning Regulations That Significantly Affect Energy Supply, Distribution or Use

This action is not subject to Executive Order 13211, because it is not a significant regulatory action under Executive Order 12866.

I. National Technology Transfer and Advancement Act and 1 CFR Part 51

This action involves technical standards. The EPA proposes to use

ASTM D6911–15 for packaging and shipping samples in Method 30B. The ASTM D6911–15 standard provides guidance on the selection of procedures for proper packaging and shipment of environmental samples to the laboratory for analysis to ensure compliance with appropriate regulatory programs and protection of sample integrity during shipment.

The EPA proposes to use ASTM E617–13 for laboratory weights and precision mass standards in Methods 4, 5, 5H, 5I, 29, and 202. The ASTM E617–13 standard covers weights and mass standards used in laboratories for specific classes.

The ASTM D6911–15 and ASTM E617–13 standards were developed and adopted by the American Society for Testing and Materials (ASTM). These standards may be obtained from *http://www.astm.org* or from the ASTM at 100 Barr Harbor Drive, P.O. Box C700, West Conshohocken, PA 19428–2959.

J. Executive Order 12898: Federal Actions To Address Environmental Justice in Minority Populations and Low-Income Populations

The EPA believes the human health or environmental risk addressed by this action will not have potential disproportionately high and adverse human health or environmental effects on minority, low-income or indigenous populations because it does not affect the level of protection provided to human health or the environment.

List of Subjects

40 CFR Part 51

Environmental protection, Air pollution control, Performance specifications, Test methods and procedures.

40 CFR Part 60

Environmental protection, Air pollution control, Incorporation by reference, Performance specifications, Test methods and procedures.

40 CFR Parts 61 and 63

Environmental protection, Air pollution control, Performance specifications, Test methods and procedures.

Dated: August 14, 2015.

Gina McCarthy,

Administrator.

For the reasons stated in the preamble, the Environmental Protection Agency proposes to amend title 40, chapter I of the Code of Federal Regulations as follows:

PART 51—REQUIREMENTS FOR PREPARATION, ADOPTION, AND SUBMITTAL OF IMPLEMENTATION PLANS

■ 1. The authority citation for part 51 continues to read as follows:

Authority: 23 U.S.C. 101; 42 U.S.C. 7401–7671q.

■ 2. Revise section 4.0 a. of appendix M to part 51 to read as follows:

Appendix M to Part 51—Recommended Test Methods for State Implementation Plans

* * * * *

4.0 * * *

a. The source owner, operator, or representative of the tested facility shall obtain an audit sample, if commercially available, from an AASP for each test method used for regulatory compliance purposes. No audit samples are required for the following test methods: Methods 3A and 3C of appendix A–3 of part 60 of this chapter, Methods 6C, 7E, 9, and 10 of appendix A–4 of part 60, Methods 18 and 19 of appendix A–6 of part 60, Methods 20, 22, and 25A of appendix A–7 of part 60, Methods 30A and 30B of appendix A–8 of part 60, and Methods 303, 318, 320, and 321 of appendix A of part 63 of this chapter. If multiple sources at a single facility are tested during a compliance test event, only one audit sample is required for each method used during a compliance test. The compliance authority responsible for the compliance test may waive the requirement to include an audit sample if they believe that an audit sample is not necessary. ''Commercially available'' means that two or more independent AASPs have blind audit samples available for purchase. If the source owner, operator, or representative cannot find an audit sample for a specific method, the owner, operator, or representative shall consult the EPA Web site at the following URL, *http://www.epa.gov/ttn/emc,* to confirm whether there is a source that can supply an audit sample for that method. If the EPA Web site does not list an available audit sample at least 60 days prior to the beginning of the compliance test, the source owner, operator, or representative shall not be required to include an audit sample as part of the quality assurance program for the compliance test. When ordering an audit sample, the source owner, operator, or representative shall give the sample provider an estimate for the concentration of each pollutant that is emitted by the source or the estimated concentration of each pollutant based on the permitted level and the name, address, and phone number of the compliance authority. The source owner, operator, or representative shall report the results for the audit sample along with a summary of the emission test results for the audited pollutant to the compliance authority and shall report the results of the audit sample to the AASP. The source owner, operator, or representative shall make both reports at the same time and in the same manner or shall report to the compliance authority first and then report to the AASP. If the method being audited is a method that allows the samples to be analyzed in the field, and the tester plans to analyze the samples in the field, the tester may analyze the audit samples prior to collecting the emission samples provided a representative of the compliance authority is present at the testing site. The tester may request and the compliance authority may grant a waiver to the requirement that a representative of the compliance authority must be present at the testing site during the field analysis of an audit sample. The source owner, operator, or representative may report the results of the audit sample to the compliance authority and then report the results of the audit sample to the AASP prior to collecting any emission samples. The test protocol and final test report shall document whether an audit sample was ordered and utilized and the pass/fail results as applicable.

* * * * *

■ 3. Revise section 12.5 equations 8 and 9 in Method 201A of appendix M to part 51 to read as follows:

Appendix M to Part 51—Recommended Test Methods for State Implementation Plans

* * * * *

Method 201A—Determination of PM_{10} and $PM_{2.5}$ Emissions From Stationary Sources (Constant Sampling Rate Procedure)

* * * * *

12.0 Calculations and Data Analysis

* * * * *

12.5 * * *

For N_{re} less than 3,162:

$$Q_{IV} = 0.0060639\left[\frac{\mu}{C^{0.4242}}\right]\left[\frac{P_s M_w}{T_s}\right]^{-0.5759}\left[\frac{1}{D_{50}}\right]^{0.8481} \quad \text{(Eq. 8)}$$

For N_{re} greater than 3,162:

$$Q_{IV} = 0.007657\left[\frac{\mu}{C^{0.6205}}\right]\left[\frac{P_s M_w}{T_s}\right]^{-0.3795}\left[\frac{1}{D_{50}}\right]^{01.241} \quad \text{(Eq. 9)}$$

* * * * *

■ 4. In Method 202 of appendix M to part 51:

■ a. Add sections 3.8, 10.3, 10.4, 11.2.2.1, 11.2.2.2, 11.2.2.3, 11.2.2.4, and Figure 7 to section 18.0.

■ b. Revise sections 8.5.4.3 and 9.10.

The additions and revisions read as follows:

Appendix M to Part 51—Recommended Test Methods for State Implementation Plans

* * * * *

Method 202—Dry Impinger Method for Determining Condensable Particulate Emissions From Stationary Sources

* * * * *

3.0 Definitions

* * * * *

3.8 *ASTM E617–13.* ASTM E617–13 ''Standard Specification for Laboratory Weights and Precisions Mass Standards'' was developed and adopted by the American Society for Testing and Materials (ASTM). The standards cover weights and mass standards used in laboratories for specific classes. The ASTM E617–13 standard has been approved for incorporation by reference by the Director of the Office of the Federal Register in accordance with 5 U.S.C. 552(a) and 1 CFR part 51. The standard may be obtained from *http://www.astm.org* or from the ASTM at 100 Barr Harbor Drive, P.O. Box C700, West Conshohocken, PA 19428–2959.

* * * * *

8.0 Sample Collection, Preservation, Storage, and Transport

* * * * *

8.5.4.3 *CPM Container #2, Organic rinses.* Follow the water rinses of the back half of the filterable PM filer holder, probe extension, condenser, each impinger and all of the connecting glassware and front half of the CPM filter with an acetone rinse.

* * * * *

9.0 Quality Control

* * * * *

9.10 Field Train Recovery Blank. You must recover a minimum of one field train blank for each source category tested at the facility. You must recover the field train blank after the first or second run of the test. You must assemble the sampling train as it will be used for testing. Prior to the purge, you must add 100 ml of water to the first impinger and record this data on Figure 4. You must purge the assembled train as described in Section 8.5.3. You must recover field train blank samples as described in Section 8.5.4. From the field sample weight, you will subtract the condensable particulate mass you determine with this blank train or 0.002 g (2.0 mg), whichever is less.

* * * * *

10.0 Calibration and Standardization

* * * * *

10.3 Field Balance Calibration Check. Check the calibration of the balance used to weigh impingers with ASTM E617–13 ''Standard Specification for Laboratory Weights and Precision Mass Standards'' Class 3 tolerance (or better) weight of at least 500g or within 50g of a loaded impinger weight. Daily before use, the field balance must measure the weight within ± 0.5 g of the certified mass. If the daily balance calibration check fails, perform corrective measures and repeat check before use of balance.

10.4 Analytical Balance Calibration. Perform a multipoint calibration (at least five points spanning the operational range) of the analytical balance before the first use and semiannually, thereafter. The calibration of the analytical balance must be conducted using ASTM E617–13 ''Standard Specification for Laboratory Weights and Precision Mass Standards'' Class 2 (or better) tolerance weights. Audit the balance each day it is used for gravimetric measurements by weighing at least one ASTM E617–13 Class 2 tolerance (or better) calibration weight that corresponds to 50 to 150 percent of the weight of one filter or 5 g. If the scale cannot reproduce the value of the calibration weight to within 0.5 mg of the certified mass, perform corrective measures, and conduct the multipoint calibration before use.

11.0 Analytical Procedures

* * * * *

11.2.2 * * *

11.2.2.1 Determine the inorganic fraction weight. Transfer the aqueous fraction from the extraction to a clean 500-ml or smaller beaker. Evaporate to no less than 10 ml liquid on a hot plate or in the oven at 105 °C and allow to dry at room temperature (not to exceed 30 °C (85 °F)). You must ensure that water and volatile acids have completely evaporated before neutralizing nonvolatile acids in the sample. Following evaporation, desiccate the residue for 24 hours in a desiccator containing anhydrous calcium sulfate. Weigh at intervals of at least 6 hours to a constant weight. (See Section 3.0 for a definition of Constant weight.) Report results to the nearest 0.1 mg on the CPM Work Table (see Figure 6 of Section 18) and proceed directly to Section 11.2.3. If the residue cannot be weighed to constant weight, re-dissolve the residue in 100 ml of deionized distilled ultra-filtered water that contains 1 ppmw (1 mg/L) residual mass or less and continue to Section 11.2.2.2.

11.2.2.2 Use titration to neutralize acid in the sample and remove water of hydration. If used, calibrate the pH meter with the neutral and acid buffer solutions. Then titrate the sample with 0.1N NH4OH to a pH of 7.0, as indicated by the pH meter or colorimetric indicator. Record the volume of titrant used on the CPM Work Table (see Figure 6 of Section 18).

11.2.2.3 Using a hot plate or an oven at 105 °C, evaporate the aqueous phase to approximately 10 ml. Quantitatively transfer the beaker contents to a clean, 50-ml pre-tared weighing tin and evaporate to dryness at room temperature (not to exceed 30 °C (85 °F)) and pressure in a laboratory hood. Following evaporation, desiccate the residue for 24 hours in a desiccator containing anhydrous calcium sulfate. Weigh at intervals of at least 6 hours to a constant weight. (See Section 3.0 for a definition of Constant weight.) Report results to the nearest 0.1 mg on the CPM Work Table (see Figure 6 of Section 18).

11.2.2.4 Calculate the correction factor to subtract the NH_4^+ retained in the sample using Equation 1 in Section 12.

* * * * *

18.0 Tables, Diagrams, Flowcharts, and Validation Data

* * * * *

BILLING CODE 6560–50–P

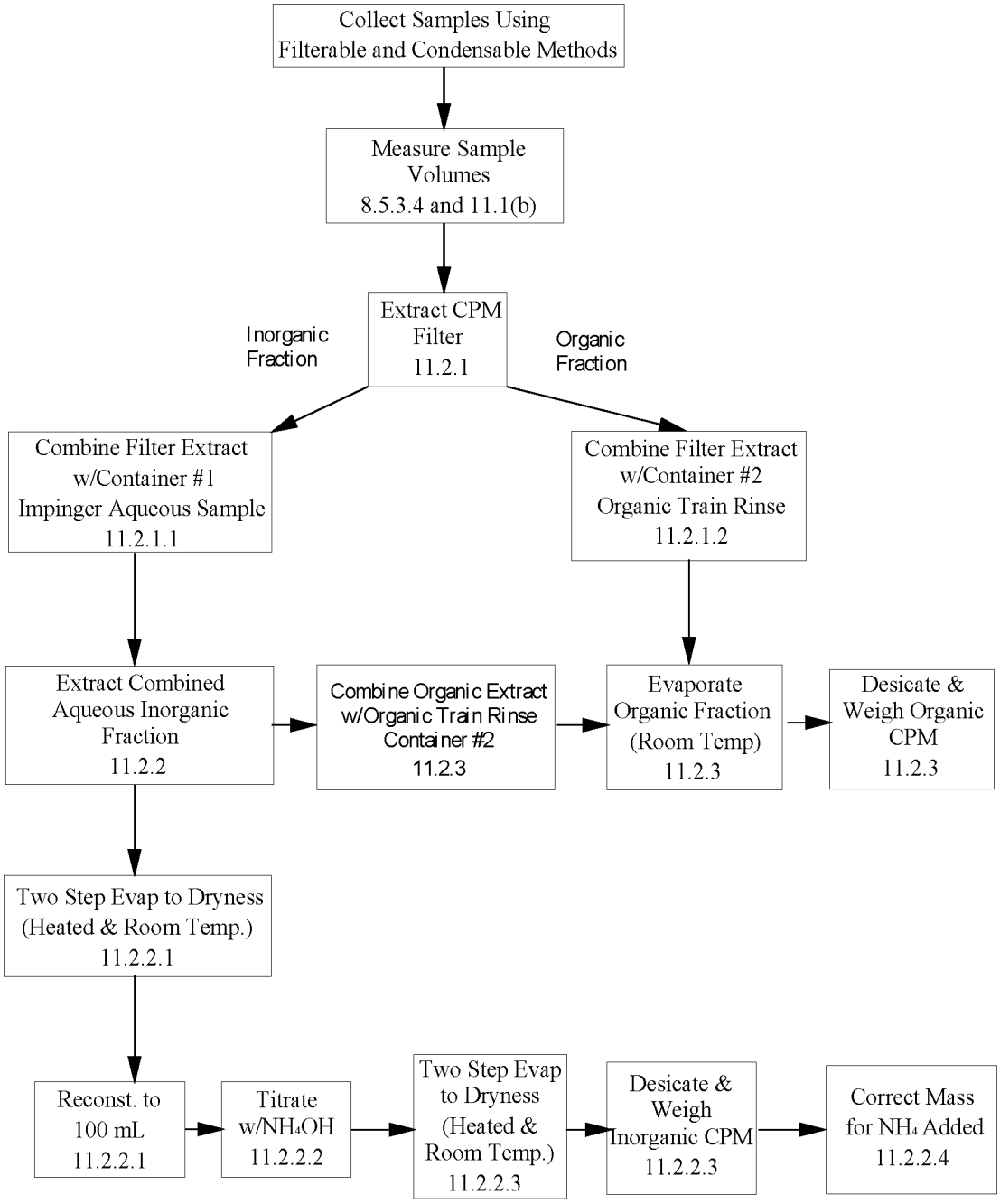

Figure 7. CPM Sample Processing Flow Chart

BILLING CODE 6560–50–C

* * * * *

■ 5. Revise sections 3.3 and 5.1.3 of appendix P to part 51 to read as follows:

Appendix P to Part 51—Minimum Emission Monitoring Requirements

* * * * *

3.3 *Calibration Gases.* For nitrogen oxides monitoring systems installed on fossil fuel-fired steam generators, the pollutant gas used to prepare calibration gas mixtures (Section 6.1, Performance Specification 2, appendix B, part 60 of this chapter) shall be nitric oxide (NO). For nitrogen oxides monitoring systems, installed on nitric acid plants the pollutant gas used to prepare calibration gas mixtures (Section 6.1, Performance Specification 2, appendix B, part 60) shall be nitrogen dioxide (NO_2). These gases shall also be used for daily checks under paragraph 3.7 of this appendix as applicable. For sulfur dioxide monitoring systems installed on fossil fuel-fired steam generators or sulfuric acid plants, the pollutant gas used to prepare calibration gas mixtures (Section 6.1, Performance Specification 2, appendix B, part 60) shall be sulfur dioxide (SO_2). Span and zero gases should be traceable to National Bureau of Standards reference gases whenever these reference gases are available. Every 6 months from date of manufacture, span and zero gases shall be reanalyzed by conducting triplicate analyses using the reference methods in appendix A, part 60, as follows: For SO_2, use Reference Method 6; for nitrogen oxides, use Reference Method 7; and for carbon dioxide or oxygen, use Reference Method 3. The gases may be analyzed at less

frequent intervals if longer shelf lives are guaranteed by the manufacturer.

* * * * *

5.1.3 The values used in the equations under paragraph 5.1 are derived as follows:

E = pollutant emission, g/million cal (lb/million BTU),

C = pollutant concentration, g/dscm (lb/dscf), determined by multiplying the average concentration (ppm) for each hourly period by 4.16×10^{-5} M g/dscm per ppm (2.64×10^{-9} M lb/dscf per ppm) where M = pollutant molecular weight, g/g-mole (lb/lb-mole). M = 64 for sulfur dioxide and 46 for oxides of nitrogen.

$\%O_2$, $\%CO_2$ = Oxygen or carbon dioxide volume (expressed as percent) determined with equipment specified under paragraphs 3.1.4 and 3.1.5 of this appendix.

* * * * *

PART 60—STANDARDS OF PERFORMANCE FOR NEW STATIONARY SOURCES

■ 6. The authority citation for part 60 continues to read as follows:

Authority: 42 U.S.C. 7401 *et seq.*

■ 7. In § 60.8, revise paragraph (f) to read as follows:

§ 60.8 Performance tests.

* * * * *

(f) Unless otherwise specified in the applicable subpart, each performance test shall consist of three separate runs using the applicable test method.

(1) Each run shall be conducted for the time and under the conditions specified in the applicable standard. For the purpose of determining compliance with an applicable standard, the arithmetic means of results of the three runs shall apply. In the event that a sample is accidentally lost or conditions occur in which one of the three runs must be discontinued because of forced shutdown, failure of an irreplaceable portion of the sample train, extreme meteorological conditions, or other circumstances, beyond the owner or operator's control, compliance may, upon the Administrator's approval, be determined using the arithmetic mean of the results of the two other runs.

(2) Contents of report (electronic or paper submitted copy). Unless otherwise specified in a relevant standard or test method, or as otherwise approved by the Administrator in writing, results of a performance test shall include general identification information for the facility including a mailing address, the actual address, the owner or operator or responsible official (where they are applicable) or an appropriate representative and an email address for this person, and the appropriate Federal Registry System (FRS) number for the facility; the purpose of the test including the regulation requiring the test, the pollutant being measured, the units of the standard or the pollutant emissions units, and any process parameter component; a brief process description; a complete unit description, including a description of feed streams and control devices, the appropriate source classification code (SCC), and the latitude and longitude of the emission point being tested, and the permitted maximum process rate (where applicable); sampling site description; description of sampling and analysis procedures and any modifications to standard procedures; quality assurance procedures; record of operating conditions, including operating parameters for which limits are being set, during the test; record of preparation of standards; record of calibrations; raw data sheets for field sampling; raw data sheets for field and laboratory analyses; chain-of-custody documentation; explanation of laboratory data qualifiers; example calculations of all applicable stack gas parameters, emission rates, percent reduction rates, and analytical results, as applicable; identification information for the company conducting the performance test including a contact person and his/her email address; and any other information required by the test method, a relevant standard, or the Administrator.

* * * * *

■ 8. In § 60.17:

■ a. Redesignate paragraphs (g)(202) through (206) as (g)(204) through (208).

■ b. Redesignate paragraphs (g)(200) and (201) as (g)(202) and (203).

■ c. Redesignate paragraph (g)(199) as (g)(200).

■ d. Redesignate paragraph (g)(198) as (g)(199).

■ e. Redesignate paragraph (g)(197) as (g)(198).

■ f. Redesignate paragraph (g)(196) as (g)(197).

■ g. Redesignate paragraph (g)(195) as (g)(196).

■ h. Redesignate paragraph (g)(194) as (g)(195).

■ i. Redesignate paragraph (g)(193) as (g)(194).

■ j. Redesignate paragraph (g)(192) as (g)(193).

■ k. Redesignate paragraph (g)(191) as (g)(192).

■ l. Redesignate paragraph (g)(190) as (g)(191).

■ m. Add paragraphs (g)(190) and (g)(201).

The additions read as follows:

§ 60.17 Incorporations by reference.

* * * * *

(g) * * *

* * * * *

(190) ASTM D6911–15, Standard Guide for Packaging and Shipping Environmental Samples for Laboratory Analysis, IBR approved for appendix A–8 to this part: Method 30B, section 8.3.3.8.

* * * * *

(201) ASTM E617–13, Standard Specification for Laboratory Weights and Precision Mass Standards, IBR approved for appendix M to part 51 of this chapter: Method 202, sections 10.3 and 10.4; appendix A–3 to this part: Method 4, section 10.3; Method 5, sections 10.7 and 10.8, Method 5H, sections 10.4 and 10.5, Method 5I, sections 10.7 and 10.8; and appendix A–8 to this part: Method 29, section 10.4.

* * * * *

Subpart JJJJ—Standards of Performance for Stationary Spark Ignition Internal Combustion Engines

■ 9. Revise table 2 to subpart JJJJ of part 60 to read as follows:

As stated in § 60.4244, you must comply with the following requirements for performance tests within 10 percent of 100 percent peak (or the highest achievable) load:

TABLE 2 TO SUBPART JJJJ OF PART 60—REQUIREMENTS FOR PERFORMANCE TESTS

For each	Complying with the requirement to	You must	Using	According to the following requirements
1. Stationary SI internal combustion engine demonstrating compliance according to § 60.4244.	a. limit the concentration of NO_X in the stationary SI internal combustion engine exhaust.	i. Select the sampling port location and the number/location of traverse points at the exhaust of the stationary internal combustion engine;	(1) Method 1 or 1A of 40 CFR part 60, appendix A–1, if measuring flow rate.	(a) Alternatively, for NO_X, O_2, and moisture measurement, ducts ≤6 inches in diameter may be sampled at a single point located at the duct centroid and ducts >6 and ≤12 inches in diameter may be sampled at 3 traverse points located at 16.7, 50.0, and 83.3% of the measurement line ('3-point long line'). If the duct is >12 inches in diameter *and* the sampling port location meets the two and half-diameter criterion of section 11.1.1 of Method 1 of 40 CFR part 60, appendix A, the duct may be sampled at '3-point long line'; otherwise, conduct the stratification testing and select sampling points according to section 8.1.2 of Method 7E of 40 CFR part 60, appendix A.
		ii. Determine the O_2 concentration of the stationary internal combustion engine exhaust at the sampling port location;	(2) Method 3, 3A, or 3B[b] of 40 CFR part 60, appendix A–2 or ASTM Method D6522–00(Reapproved 2005)[a,c].	(b) Measurements to determine O_2 concentration must be made at the same time as the measurements for NO_X concentration.
		iii. If necessary, determine the exhaust flowrate of the stationary internal combustion engine exhaust;	(3) Method 2 or 2C of 40 CFR part 60, appendix A–1 or Method 19 of 40 CFR part 60, appendix A–7.	
		iv. If necessary, measure moisture content of the stationary internal combustion engine exhaust at the sampling port location; and	(4) Method 4 of 40 CFR part 60, appendix A–3, Method 320 of 40 CFR part 63, appendix A, or ASTM Method D 6348–03[c].	(c) Measurements to determine moisture must be made at the same time as the measurement for NO_X concentration.
		v. Measure NO_X at the exhaust of the stationary internal combustion engine; if using a control device, the sampling site must be located at the outlet of the control device.	(5) Method 7E of 40 CFR part 60, appendix A–4, ASTM Method D6522–00 (Reapproved 2005)[a], Method 320 of 40 CFR part 63, appendix A, or ASTM Method D 6348–03[c].	(d) Results of this test consist of the average of the three 1-hour or longer runs.
	b. limit the concentration of CO in the stationary SI internal combustion engine exhaust.	i. Select the sampling port location and the number/location of traverse points at the exhaust of the stationary internal combustion engine;	(1) Method 1 or 1A of 40 CFR part 60, appendix A–1, if measuring flow rate.	(a) Alternatively, for CO, O_2, and moisture measurement, ducts ≤6 inches in diameter may be sampled at a single point located at the duct centroid and ducts >6 and ≤12 inches in diameter may be sampled at 3 traverse points located at 16.7, 50.0, and 83.3% of the measurement line ('3-point long line'). If the duct is >12 inches in diameter *and* the sampling port location meets the two and half-diameter criterion of section 11.1.1 of Method 1 of 40 CFR part 60, appendix A, the duct may be sampled at '3-point long line'; otherwise, conduct the stratification testing and select sampling points according to section 8.1.2 of Method 7E of 40 CFR part 60, appendix A.

TABLE 2 TO SUBPART JJJJ OF PART 60—REQUIREMENTS FOR PERFORMANCE TESTS—Continued

For each	Complying with the requirement to	You must	Using	According to the following requirements
		ii. Determine the O_2 concentration of the stationary internal combustion engine exhaust at the sampling port location;	(2) Method 3, 3A, or 3B[b] of 40 CFR part 60, appendix A–2 or ASTM Method D6522–00(Reapproved 2005)[a c].	(b) Measurements to determine O_2 concentration must be made at the same time as the measurements for CO concentration.
		iii. If necessary, determine the exhaust flowrate of the stationary internal combustion engine exhaust;	(3) Method 2 or 2C of 40 CFR 60, appendix A–1 or Method 19 of 40 CFR part 60, appendix A–7.	
		iv. If necessary, measure moisture content of the stationary internal combustion engine exhaust at the sampling port location; and	(4) Method 4 of 40 CFR part 60, appendix A–3, Method 320 of 40 CFR part 63, appendix A, or ASTM Method D 6348–03[c].	(c) Measurements to determine moisture must be made at the same time as the measurement for CO concentration.
		v. Measure CO at the exhaust of the stationary internal combustion engine; if using a control device, the sampling site must be located at the outlet of the control device.	(5) Method 10 of 40 CFR part 60, appendix A4, ASTM Method D6522–00 (Reapproved 2005)[a], Method 320 of 40 CFR part 63, appendix A, or ASTM Method D 6348–03[c].	(d) Results of this test consist of the average of the three 1-hour or longer runs.
	c. limit the concentration of VOC in the stationary SI internal combustion engine exhaust.	i. Select the sampling port location and the number/location of traverse points at the exhaust of the stationary internal combustion engine;	(1) Method 1 or 1A of 40 CFR part 60, appendix A–1, if measuring flow rate.	(a) Alternatively, for VOC, O_2, and moisture measurement, ducts ≤6 inches in diameter may be sampled at a single point located at the duct centroid and ducts >6 and ≤12 inches in diameter may be sampled at 3 traverse points located at 16.7, 50.0, and 83.3% of the measurement line ('3-point long line'). If the duct is >12 inches in diameter *and* the sampling port location meets the two and half-diameter criterion of section 11.1.1 of Method 1 of 40 CFR part 60, appendix A, the duct may be sampled at '3-point long line'; otherwise, conduct the stratification testing and select sampling points according to section 8.1.2 of Method 7E of 40 CFR part 60, appendix A.
		ii. Determine the O_2 concentration of the stationary internal combustion engine exhaust at the sampling port location;	(2) Method 3, 3A, or 3B[b] of 40 CFR part 60, appendix A–2 or ASTM Method D6522–00(Reapproved 2005) [a c].	(b) Measurements to determine O_2 concentration must be made at the same time as the measurements for VOC concentration.
		iii. If necessary, determine the exhaust flowrate of the stationary internal combustion engine exhaust;	(3) Method 2 or 2C of 40 CFR 60, appendix A–1 or Method 19 of 40 CFR part 60, appendix A–7.	
		iv. If necessary, measure moisture content of the stationary internal combustion engine exhaust at the sampling port location; and	(4) Method 4 of 40 CFR part 60, appendix A–3, Method 320 of 40 CFR part 63, appendix A, or ASTM Method D 6348–03[c].	(c) Measurements to determine moisture must be made at the same time as the measurement for VOC concentration.

TABLE 2 TO SUBPART JJJJ OF PART 60—REQUIREMENTS FOR PERFORMANCE TESTS—Continued

For each	Complying with the requirement to	You must	Using	According to the following requirements
		v. Measure VOC at the exhaust of the stationary internal combustion engine; if using a control device, the sampling site must be located at the outlet of the control device.	(5) Method 25A of 40 CFR part 60, appendix A–7 or Method 25A with the use of a methane cutter as described in 40 CFR 1065.265.	(d) Results of this test consist of the average of the three 1-hour or longer runs.
		vi. If necessary, measure methane and/or ethane at the exhaust of the stationary internal combustion engine; if using a control device, the sampling site must be located at the outlet of the control device.	(6) Method 18 of 40 CFR part 60, appendix A–6, Method 320 of 40 CFR part 63, appendix A, or ASTM Method D 6348–03[c].	(e) Measurements to determine methane and/or ethane must be made at the same time as the measurement for VOC concentration.

[a] Also, you may petition the Administrator for approval to use alternative methods for portable analyzer.
[b] You may use ASME PTC 19.10–1981, Flue and Exhaust Gas Analyses, for measuring the O_2 content of the exhaust gas as an alternative to EPA Method 3B. AMSE PTC 19.10–1981 incorporated by reference, see 40 CFR 60.17.
[c] Incorporated by reference; see 40 CFR 60.17.

■ 10. In appendix A–1 to part 60:

■ a. Revise section 11.2.1.2 in Method 1.

■ b. Remove Figure 1–2 in section 17.0 after the table entitled ''Table 1–1 Cross-Section Layout for Rectangular Stacks'' in Method 1.

■ c. Revise sections 6.7, 10.1.2.3, 10.1.3.4, 10.1.3.7, 10.1.4.1.3, 10.1.4.3, and Figure 2–10 in section 17.0 in Method 2.

The revisions read as follows:

Appendix A–1 to Part 60—Test Methods 1 through 2F

* * * * *

Method 1—Sample and Velocity Traverses for Stationary Sources

* * * * *

11.0 Procedure

* * * * *

11.2.1.2 When the eight- and two-diameter criterion cannot be met, the minimum number of traverse points is determined from Figure 1–1. Before referring to the figure, however, determine the distances from the measurement site to the nearest upstream and downstream disturbances, and divide each distance by the stack diameter or equivalent diameter, to determine the distance in terms of the number of duct diameters.

* * * * *

Method 2—Determination of Stack Gas Velocity and Volumetric Flow Rate (Type S Pitot Tube)

* * * * *

6.0 Equipment and Supplies

* * * * *

6.7 Calibration Pitot Tube. Calibration of the Type S pitot tube requires a standard Pitot tube for a reference.

* * * * *

10.0 Calibration and Standardization

* * * * *

10.1.2.3 The flow system shall have the capacity to generate a test-section velocity around 910 m/min (3,000 ft/min). This velocity must be constant with time to guarantee constant and steady flow during the entire period of calibration. A centrifugal fan is recommended for this purpose, as no flow rate adjustment for back pressure of the fan is allowed during the calibration process. Note that Type S pitot tube coefficients obtained by single-velocity calibration at 910 m/min (3,000 ft/min) will generally be valid to ±3 percent for the measurement of velocities above 300 m/min (1,000 ft/min) and to ±6 percent for the measurement of velocities between 180 and 300 m/min (600 and 1,000 ft/min). If a more precise correlation between the pitot tube coefficient, (Cp), and velocity is desired, the flow system should have the capacity to generate at least four distinct, time-invariant test-section velocities covering the velocity range from 180 to 1,500 m/min (600 to 5,000 ft/min), and calibration data shall be taken at regular velocity intervals over this range (see References 9 and 14 in section 17.0 for details).

* * * * *

10.1.3.4 Read Δp_{std}, and record its value in a data table similar to the one shown in Figure 2–9. Remove the standard pitot tube from the duct, and disconnect it from the manometer. Seal the standard entry port. Make no adjustment to the fan speed or other wind tunnel volumetric flow control device between this reading and the corresponding Type S pitot reading.

* * * * *

10.1.3.7 Repeat Steps 10.1.3.3 through 10.1.3.6 until three pairs of Δp readings have been obtained for the A side of the Type S pitot tube, with all the paired observations conducted at a constant fan speed (no changes to fan velocity between observed readings).

* * * * *

10.1.4.1.3 For Type S pitot tube combinations with complete probe assemblies, the calibration point should be located at or near the center of the duct; however, insertion of a probe sheath into a small duct may cause significant cross-sectional area interference and blockage and yield incorrect coefficient values (Reference 9 in section 17.0). Therefore, to minimize the blockage effect, the calibration point may be a few inches off-center if necessary, but no closer to the outer wall of the wind tunnel than 4 inches. The maximum allowable blockage, as determined by a projected-area model of the probe sheath, is 2 percent or less of the duct cross-sectional area (Figure 2–10a). If the pitot and/or probe assembly blocks more than 2 percent of the cross-sectional area at an insertion point only 4 inches inside the wind tunnel, the diameter of the wind tunnel must be increased.

* * * * *

10.1.4.3 For a probe assembly constructed such that its pitot tube is always used in the same orientation, only one side of the pitot tube need be calibrated (the side which will face the flow). The pitot tube must still meet the alignment specifications of Figure 2–2 or 2–3, however, and must have an average

deviation (σ) value of 0.01 or less (see section 12.4.4).

* * * * *

17.0 Tables, Diagrams, Flowcharts, and Validation Data

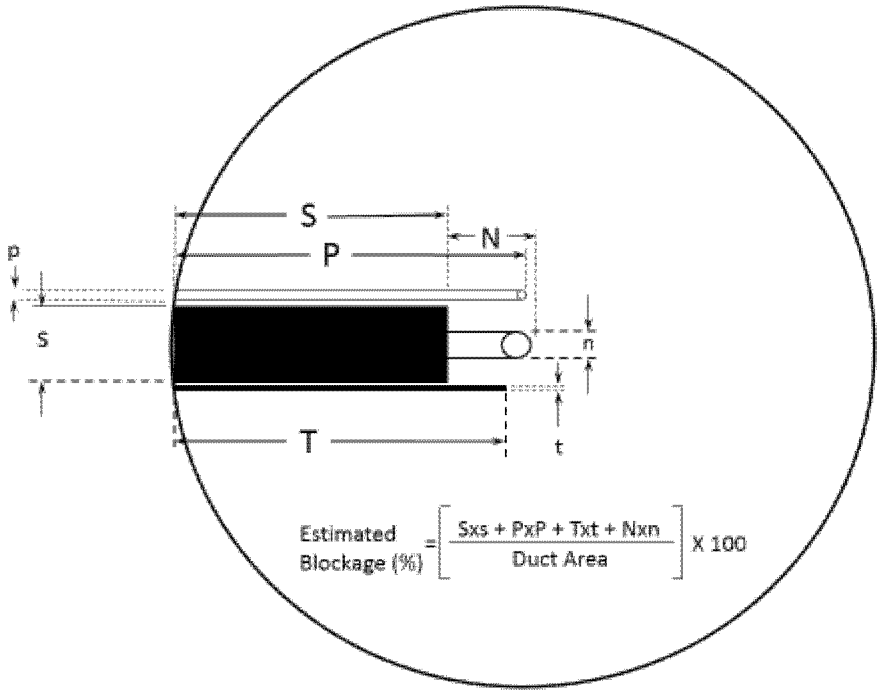

Figure 2-10. Projected-area models for typical pitot tube assemblies.

* * * * *

■ 11. In appendix A–2 to part 60:

■ a. Revise sections 6.11.1, 6.11.2, 10.6.6, and 10.6.8 in Method 2G.

■ b. Revise section 6.3 in Method 3C.

■ c. Add sections 6.3.1, 6.3.2, 6.3.3, 6.3.4, and 6.3.5 in Method 3C.

The revisions and additions read as follows:

Appendix A–2 to Part 60—Test Methods 2G through 3C

* * * * *

Method 2G—Determination of Stack Gas Velocity and Volumetric Flow Rate With Two-Dimensional Probes

* * * * *

6.0 Equipment and Supplies

* * * * *

6.11.1 Test section cross-sectional area. The flowing gas stream shall be confined within a circular, rectangular, or elliptical duct. The cross-sectional area of the tunnel must be large enough to ensure fully developed flow in the presence of both the calibration pitot tube and the tested probe. The calibration site, or ''test section,'' of the wind tunnel shall have a minimum diameter of 30.5 cm (12 in.) for circular or elliptical duct cross-sections or a minimum width of 30.5 cm (12 in.) on the shorter side for rectangular cross-sections. Wind tunnels shall meet the probe blockage provisions of this section and the qualification requirements prescribed in section 10.1. The projected area of the portion of the probe head, shaft, and attached devices inside the wind tunnel during calibration shall represent no more than 2 percent of the cross-sectional area of the tunnel. If the pitot and/or probe assembly blocks more than 2 percent of the cross-sectional area at an insertion point only 4 inches inside the wind tunnel, the diameter of the wind tunnel must be increased.

6.11.2 Velocity range and stability. The wind tunnel should be capable of achieving and maintaining a constant and steady velocity between 6.1 m/sec and 30.5 m/sec (20 ft/sec and 100 ft/sec) for the entire calibration period for each selected calibration velocity. The wind tunnel shall produce fully developed flow patterns that are stable and parallel to the axis of the duct in the test section.

* * * * *

10.0 Calibration

* * * * *

10.6.6 Read the differential pressure from the calibration pitot tube (ΔP_{std}), and record its value. Read the barometric pressure to within ±2.5 mm Hg (±0.1 in. Hg) and the temperature in the wind tunnel to within 0.6°C (1 °F). Record these values on a data form similar to Table 2G–8. Record the rotational speed of the fan or indicator of wind tunnel volumetric flow and make no adjustment to fan speed or wind tunnel flow control between this observation and the Type S probe reading.

* * * * *

10.6.8 Take paired differential pressure measurements with the calibration pitot tube and tested probe (according to sections 10.6.6 and 10.6.7). The paired measurements in each replicate can be made either simultaneously (*i.e.,* with both probes in the wind tunnel) or by alternating the measurements of the two probes (*i.e.,* with only one probe at a time in the wind tunnel). Adjustments made to the fan speed or other changes to the system designed to change the air flow velocity of the wind tunnel between observation of the calibration pitot tube (ΔP_{std}) and the Type S pitot tube invalidates the reading and the observation must be repeated.

* * * * *

Method 3C—Determination of Carbon Dioxide, Methane, Nitrogen, and Oxygen From Stationary Sources

* * * * *

6. Analysis

* * * * *

6.3 Analyzer Linearity Check and Calibration. Perform this test before sample analysis.

6.3.1 Using the gas mixtures in section 5.1, verify the detector linearity over the range of suspected sample concentrations with at least three concentrations per

compound of interest. This initial check may also serve as the initial instrument calibration.

6.3.2 You may extend the use of the analyzer calibration by performing a single point calibration verification. Calibration verifications shall be performed by triplicate injections of a single-point standard gas. The concentration of the single-point calibration must either be at the midpoint of the calibration curve or at approximately the source emission concentration measured during operation of the analyzer.

6.3.3 Triplicate injections must agree within 5 percent of their mean, and the average calibration verification point must agree within 10 percent of the initial calibration response factor. If these calibration verification criteria are not met, the initial calibration described in section 6.3.1, using at least three concentrations, must be repeated before analysis of samples can continue.

6.3.4 For each instrument calibration, record the carrier and detector flow rates, detector filament and block temperatures, attenuation factor, injection time, chart speed, sample loop volume, and component concentrations.

6.3.5 Plot a linear regression of the standard concentrations versus area values to obtain the response factor of each compound. Alternatively, response factors of uncorrected component concentrations (wet basis) may be generated using instrumental integration.

Note: Peak height may be used instead of peak area throughout this method.

* * * * *

■ 12. In appendix A–3 to part 60:
■ a. Add sections 10.3 and 12.2.5 in Method 4.
■ b. Revise section 16.4 in Method 4.
■ c. Revise sections 6.1.1.9 and 8.7.6.2.5 in Method 5.
■ d. Add sections 10.7 and 10.8 in Method 5.
■ e. Add sections 10.4 and 10.5 in Method 5H.
■ f. Add sections 10.1 and 10.2 in Method 5I.

The revisions and additions read as follows:

Appendix A–3 to Part 60—Test Methods 4 through 5I

* * * * *

Method 4—Determination of Moisture Content in Stack Gases

* * * * *

10.0 Calibration and Standardization

* * * * *

10.3 Field Balance Calibration Check. Check the calibration of the balance used to weigh impingers using ASTM E617–13 ''Standard Specification for Laboratory Weights and Precision Mass Standards'' (incorporated by reference—see 40 CFR 60.17) Class 3 tolerance (or better) weight of at least 500g or within 50g of a loaded impinger weight. Daily before use, the field balance must measure the weight within ±0.5g of the certified mass. If the daily balance calibration check fails, perform corrective measures and repeat check before use of balance.

* * * * *

12.0 Data Analysis and Calculations

* * * * *

12.2.5 Using F-factors to determine approximate moisture for estimating moisture content where no wet scrubber is being used, for the purpose of determining isokinetic sampling rate settings with no fuel sample is acceptable using the average F_c or F_d factor from Method 19 (see Method 19, section 12.3.1). If this option is selected, calculate the approximate moisture as follows:

$B_{WS} = B_H + B_A + B_F$

Where:

B_A = Mole Fraction of moisture in the ambient air.

$$B_A = \frac{\%RH}{100 * P_{Br}} * 10^{\left[6.6912 - \left(\frac{3144}{t+390.86}\right)\right]}$$

B_F = Mole fraction of moisture from free water in the fuel.

$$B_F = \left[\frac{0.0036W^2 + 0.075W}{100}\right]\left[\frac{20.9 - O_2}{20.9}\right]$$

$B_H \leq$ Mole fraction of moisture from the hydrogen in the fuel.

$$B_H = \left[1 - \frac{F_d}{F_W}\right]\frac{(20.9 - O_2)}{20.9}$$

B_{ws} = Mole fraction of moisture in the stack gas.

F_d = Volume of dry combustion components per unit of heat content at 0 percent oxygen, dscf/106 Btu (scm/J). See Table 19–2 in Method 19.

F_w = Volume of wet combustion components per unit of heat content at 0 percent oxygen, wet scf/10^6 Btu (scm/J). See Table 19–2 in Method 19.

%RH = Percent relative humidity (calibrated hydrometer acceptable), percent.

P_{Bar} = Barometric pressure, in. Hg.

T = Ambient temperature, °F.

W = Percent free water by weight, percent.

O_2 = Percent oxygen in stack gas, dry basis, percent.

* * * * *

16.0 Alternative Procedures

* * * * *

16.4 Using F-factors to determine moisture is an acceptable alternative to Method 4 for a combustion stack not using a scrubber and where a fuel sample is taken during the test run and analyzed for development of an F_d factor (see Method 19, section 12.3.2) and where stack O_2 content is measured by Method 3A or 3B during each test run.

If this option is selected, calculate the moisture content as follows:

$B_{WS} = B_H + B_A + B_F$

Where:

B_A = Mole fraction of moisture in the ambient air.

$$B_A = \frac{\%RH}{100\ P_{bar}}\left[10^{\left[6.6912-\left(\frac{3144}{T+390.86}\right)\right]}\right]$$

Note: Values of B_A should be between 0.00 and 0.06 with common values being about 0.015.

B_F = Mole fraction of moisture from free water in the fuel.

$$B_F = \left[\frac{0.0036\,W^2 + 0.075\,W}{100}\right]\left[\frac{20.9 - O_2}{20.9}\right]$$

Note: Free water in fuel is minimal for distillate oil and gases, such as propane and natural gas, so this step may be omitted for those fuels.

B_H = Mole fraction of moisture from the hydrogen in the fuel.

$$B_H = \left(1 - \frac{F_d}{F_w}\right)\frac{(20.9 - O_2)}{20.9}$$

B_{ws} = Mole fraction of moisture in the stack gas.

F_d = Volume of dry combustion components per unit of heat content at 0 percent oxygen, dscf/10^6 Btu (scm/J). Develop a test specific F_d value using an integrated fuel sample from each test run and Equation 19–3 in section 12.3.2 of Method 19.

F_W = Volume of wet combustion components per unit of heat content at 0 percent oxygen, wet scf/10^6 Btu (scm/J). Develop a test specific F_W value using an integrated fuel sample from each test run and Equation 19–4 in section 12.3.2 of Method 19.

%RH = Percent relative humidity (calibrated hygrometer acceptable), percent.

P_{Bar} = Barometric pressure, in. Hg.

T = Ambient temperature, °F.

W = Percent free water by weight, percent.

O_2 = Percent oxygen in stack gas, dry basis, percent.

* * * * *

Method 5—Determination of Particulate Matter Emissions From Stationary Sources

* * * * *

6.0 Equipment and Supplies

* * * * *

6.1.1.9 Metering System. Vacuum gauge, leak-free pump, calibrated temperature sensors (rechecked at at least one point after each test), dry gas meter (DGM) capable of measuring volume to within 2 percent, and related equipment, as shown in Figure 5–1. Other metering systems capable of maintaining sampling rates within 10 percent of isokinetic and of determining sample volumes to within 2 percent may be used, subject to the approval of the Administrator. When the metering system is used in conjunction with a pitot tube, the system shall allow periodic checks of isokinetic rates.

* * * * *

8.0 Sample Collection, Preservation, Storage, and Transport

* * * * *

8.7.6.2.5 Clean the inside of the front half of the filter holder by rubbing the surfaces with a Nylon bristle brush and rinsing with acetone. Rinse each surface three times or more if needed to remove visible particulate. Make a final rinse of the brush and filter holder. Carefully rinse out the glass cyclone, also (if applicable). After all acetone washings and particulate matter have been collected in the sample container, tighten the lid on the sample container so that acetone will not leak out when it is shipped to the laboratory. Mark the height of the fluid level to allow determination of whether leakage occurred during transport. Label the container to identify clearly its contents.

* * * * *

10.0 Calibration and Standardization

* * * * *

10.7 Field Balance Calibration Check. Check the calibration of the balance used to weigh impingers using ASTM E617–13 ''Standard Specification for Laboratory Weights and Precision Mass Standards'' (incorporated by reference—see 40 CFR 60.17) Class 3 tolerance (or better) weight of at least 500g or within 50g of a loaded impinger weight. Daily before use, the field balance must measure the weight within ±0.5g of the certified mass. If the daily balance calibration check fails, perform corrective measures and repeat check before use of balance.

10.8 Analytical Balance Calibration. Perform a multipoint calibration (at least five points spanning the operational range) of the analytical balance before the first use and semiannually, thereafter. The calibration of the analytical balance must be conducted using ASTM E617–13 ''Standard Specification for Laboratory Weights and Precision Mass Standards'' (incorporated by reference—see 40 CFR 60.17) Class 2 (or better) tolerance weights. Audit the balance each day it is used for gravimetric measurements by weighing at least one ASTM E617–13 Class 2 tolerance (or better) calibration weight) that corresponds to 50 to 150 percent of the weight of one filter or 5g. If the scale cannot reproduce the value of the calibration weight to within 0.5 mg of the certified mass, perform corrective measures, and conduct the multipoint calibration before use.

* * * * *

Method 5H—Determination of Particulate Matter Emissions From Wood Heaters From a Stack Location

* * * * *

10.0 Calibration and Standardization

* * * * *

10.4 Field Balance Calibration Check. Check the calibration of the balance used to weigh impingers using ASTM E617–13 ''Standard Specification for Laboratory Weights and Precision Mass Standards'' (incorporated by reference—see 40 CFR 60.17) Class 3 tolerance (or better) weight of at least 500g or within 50g of a loaded impinger weight. Daily before use, the field balance must measure the weight within ± 0.5g of the certified mass. If the daily balance calibration check fails, perform corrective measures and repeat check before use of balance.

10.5 Analytical Balance Calibration. Perform a multipoint calibration (at least five points spanning the operational range) of the analytical balance before the first use and semiannually, thereafter. The calibration of the analytical balance must be conducted using ASTM E617–13 ''Standard Specification for Laboratory Weights and Precision Mass Standards'' (incorporated by reference—see 40 CFR 60.17) Class 2 (or better) tolerance weights. Audit the balance each day it is used for gravimetric measurements by weighing at least one ASTM E617–13 Class 2 tolerance (or better) calibration weight that corresponds to 50 to 150 percent of the weight of one filter or 5g. If the scale cannot reproduce the value of the calibration weight to within 0.5 mg of the certified mass, perform corrective measures, and conduct the multipoint calibration before use.

* * * * *

Method 5I—Determination of Low Level Particulate Matter Emissions From Stationary Sources

* * * * *

10. Calibration and Standardization Same as Method 5, Section 5

10.1 Field Balance Calibration Check. Check the calibration of the balance used to weigh impingers using ASTM E617–13 ''Standard Specification for Laboratory Weights and Precision Mass Standards'' (incorporated by reference—see 40 CFR 60.17) Class 3 tolerance (or better) weight of at least 500g or within 50g of a loaded impinger weight. Daily before use, the field balance must measure the weight within ±0.5g of the certified mass. If the daily balance calibration check fails, perform corrective measures and repeat check before use of balance.

10.2 Analytical Balance Calibration. Perform a multipoint calibration (at least five points spanning the operational range) of the analytical balance before the first use and semiannually, thereafter. The calibration of the analytical balance must be conducted using ASTM E617–13 ''Standard Specification for Laboratory Weights and Precision Mass Standards'' (incorporated by reference—see 40 CFR 60.17) Class 2 (or better) tolerance weights. Audit the balance each day it is used for gravimetric measurements by weighing at least one ASTM E617–13 Class 2 tolerance (or better) calibration weight that corresponds to 50 to 150 percent of the weight of one filter or 5g. If the scale cannot reproduce the value of the calibration weight to within 0.5 mg of the certified mass, perform corrective measures, and conduct the multipoint calibration before use.

* * * * *

■ 13. In appendix A–4 to part 60:

■ a. Revise section 8.3 in Method 6C.

■ b. Revise sections 8.1.2, 8.2.7 introductory text, and 12.8 in Method 7E.

■ c. Revise sections 6.2.5 and 8.4.2 in Method 10.

■ d. Add section 6.2.6 in Method 10.

■ e. Revise sections 6.1.6, 6.1.7, 6.1.8, 6.1.9, 6.1.10, 8.1, 8.2.1 and 8.2.3 in Method 10A.

■ f. Add section 6.1.11 in Method 10A.

■ g. Revise section 6.1 in Method 10B.

The revisions and additions read as follows:

Appendix A–4 to Part 60—Test Methods 6 Through 10B

* * * * *

Method 6C—Determination of Sulfur Dioxide Emissions From Stationary Sources (Instrumental Analyzer Procedure)

* * * * *

8.0 Sample Collection, Preservation, Storage, and Transport

* * * * *

8.3 *Interference Check.* You must follow the procedures of section 8.2.7 of Method 7E to conduct an interference check, substituting SO_2 for NO_X as the method pollutant. For dilution-type measurement systems, you must use the alternative interference check procedure in section 16 and a co-located, unmodified Method 6 sampling train.

* * * * *

Method 7E—Determination of Nitrogen Oxides Emissions From Stationary Sources (Instrumental Analyzer Procedure)

* * * * *

8.0 Sample Collection, Preservation, Storage, and Transport

* * * * *

8.1.2 *Determination of Stratification.* Perform a stratification test at each test site to determine the appropriate number of sample traverse points. If testing for multiple pollutants or diluents at the same site, a stratification test using only one pollutant or diluent satisfies this requirement. A stratification test is not required for small stacks that are less than 4 inches in diameter. To test for stratification, use a probe of appropriate length to measure the NO_X (or pollutant of interest) concentration at twelve traverse points located according to Table 1–1 or Table 1–2 of Method 1. Alternatively, you may measure at three points on a line passing through the centroidal area. Space the three points at 16.7, 50.0, and 83.3 percent of the measurement line. Sample for a minimum of twice the system response time (see section 8.2.6) at each traverse point. Calculate the individual point and mean NO_X concentrations. If the concentration at each traverse point differs from the mean concentration for all traverse points by no more than: (a) ± 5.0 percent of the mean concentration; or (b) ± 0.5 ppm (whichever is less restrictive), the gas stream is considered unstratified and you may collect samples from a single point that most closely matches the mean. If the 5.0 percent or 0.5 ppm criterion is not met, but the concentration at each traverse point differs from the mean concentration for all traverse points by not more than: (a) ±10.0 percent of the mean; or (b) ±1.0 ppm (whichever is less restrictive), the gas stream is considered to be minimally stratified, and you may take samples from three points. Space the three points at 16.7, 50.0, and 83.3 percent of the measurement line. Alternatively, if a twelve-point stratification test was performed and the emissions were shown to be minimally stratified (all points within ± 10.0 percent of their mean or within ± 1.0 ppm), and if the stack diameter (or equivalent diameter, for a rectangular stack or duct) is greater than 2.4 meters (7.8 ft), then you may use 3-point sampling and locate the three points along the measurement line exhibiting the highest average concentration during the stratification test, at 0.4, 1.2 and 2.0 meters from the stack or duct wall. If the gas stream is found to be stratified because the 10.0 percent or 1.0 ppm criterion for a 3-point test is not met, locate twelve traverse points for the test in accordance with Table 1–1 or Table 1–2 of Method 1.

* * * * *

8.2.7 *Interference Check.* Conduct an interference response test of the gas analyzer prior to its initial use in the field. If you have multiple analyzers of the same make and model, you need only perform this alternative interference check on one analyzer. You may also meet the interference check requirement if the instrument manufacturer performs this or a similar check on an analyzer of the same make and model of the analyzer that you use and provides you with documented results.

* * * * *

12.0 Calculations and Data Analysis

* * * * *

12.8 NO_2—NO Conversion Efficiency Correction. If desired, calculate the total NO_X concentration with a correction for converter efficiency using Equation 7E–8.

$$NO_x\ Corr = NO + \left(\frac{(NO_x - NO)}{Eff NO_2} x\ 100\right) \quad \text{Eq. 7E-8}$$

* * * * *

Method 10—Determination of Carbon Monoxide Emissions From Stationary Sources (Instrumental Analyzer Procedure)

* * * * *

6.0 Equipment and Supplies

* * * * *

6.2.5 *Flexible Bag.* Tedlar, or equivalent, with a capacity of 60 to 90 liters (2 to 3 ft^3). (Verify through the manufacturer that the Tedlar alternative is suitable for CO and make this verified information available for inspection.) Leak-test the bag in the laboratory before using by evacuating with a pump followed by a dry gas meter. When the evacuation is complete, there should be no flow through the meter.

6.2.6 Sample Tank. Stainless steel or aluminum tank equipped with a pressure indicator with a minimum volume of 4 liters.

* * * * *

8.0 Sample Collection, Preservation, Storage, and Transport

* * * * *

8.4.2 *Integrated Sampling.* Evacuate the flexible bag or sample tank. Set up the equipment as shown in Figure 10–1 with the bag disconnected. Place the probe in the stack and purge the sampling line. Connect the bag, making sure that all connections are leak-free. Sample at a rate proportional to the stack velocity. If needed, the CO_2 content of the gas may be determined by using the

Method 3 integrated sample procedures, or by weighing an ascarite CO_2 removal tube used and computing CO_2 concentration from the gas volume sampled and the weight gain of the tube. Data may be recorded on a form similar to Table 10–1. If a sample tank is used for sample collection, follow procedures similar to those in sections 8.1.2, 8.2.3, 8.3, and 12.4 of Method 25 as appropriate to prepare the tank, conduct the sampling, and correct the measured sample concentration.

* * * * *

Method 10A—Determination of Carbon Monoxide Emissions in Certifying Continuous Emission Monitoring Systems at Petroleum Refineries

* * * * *

6.0 Equipment and Supplies

* * * * *

6.1.6 Flexible Bag. Tedlar, or equivalent, with a capacity of 10 liters (0.35 ft^3) and equipped with a sealing quick-connect plug. The bag must be leak-free according to section 8.1. For protection, it is recommended that the bag be enclosed within a rigid container.

6.1.7 Sample Tank. Stainless steel or aluminum tank equipped with a pressure indicator with a minimum volume of 10 liters.

6.1.8 Valves. Stainless-steel needle valve to adjust flow rate, and stainless-steel 3-way valve, or equivalent.

6.1.9 CO_2 Analyzer. Fyrite, or equivalent, to measure CO_2 concentration to within 0.5 percent.

6.1.10 Volume Meter. Dry gas meter, capable of measuring the sample volume under calibration conditions of 300 ml/min (0.01 ft^3/min) for 10 minutes.

6.1.11 Pressure Gauge. A water filled U-tube manometer, or equivalent, of about 30 cm (12 in.) to leak-check the flexible bag.

* * * * *

8.0 Sample Collection, Preservation, Storage, and Transport

* * * * *

8.1 Sample Bag or Tank Leak-Checks. While a leak-check is required after bag or sample tank use, it should also be done before the bag or sample tank is used for sample collection. The tank should be leak-checked according to the procedure specified in section 8.1.2 of Method 25. The bag should be leak-checked in the inflated and deflated condition according to the following procedure:

* * * * *

8.2.1 Evacuate and leak check the sample bag or tank as specified in section 8.1. Assemble the apparatus as shown in Figure 10A–1. Loosely pack glass wool in the tip of the probe. Place 400 ml of alkaline permanganate solution in the first two impingers and 250 ml in the third. Connect the pump to the third impinger, and follow this with the surge tank, rate meter, and 3-way valve. Do not connect the bag or sample tank to the system at this time.

* * * * *

8.2.3 Purge the system with sample gas by inserting the probe into the stack and drawing the sample gas through the system at 300 ml/min ± 10 percent for 5 minutes. Connect the evacuated bag or sample tank to the system, record the starting time, and sample at a rate of 300 ml/min for 30 minutes, or until the bag is nearly full, or the sample tank reaches ambient pressure. Record the sampling time, the barometric pressure, and the ambient temperature. Purge the system as described above immediately before each sample.

* * * * *

Method 10B—Determination of Carbon Monoxide Emissions From Stationary Sources

* * * * *

6.0 Equipment and Supplies

* * * * *

6.1 Sample Collection. Same as in Method 10A, section 6.1 (paragraphs 6.1.1 through 6.1.11).

* * * * *

■ 14. Revise section 8.3.2 in Method 15 of appendix A–5 to part 60 to read as follows:

Appendix A–5 to Part 60—Test Methods 11 through 15A

* * * * *

Method 15—Determination of Hydrogen Sulfide, Carbonyl Sulfide, and Carbon Disulfide Emissions From Stationary Sources

* * * * *

8.0 Sample Collection, Preservation, Transport, and Storage

* * * * *

8.3.2 Determination of Calibration Drift. After each run, or after a series of runs made within a 24-hour period, perform a partial recalibration using the procedures in section 10.0. Only H_2S (or other permeant) need be used to recalibrate the GC/FPD analysis system and the dilution system. Partial recalibration may be performed at the midlevel calibration gas concentration or at a concentration measured in the samples but not less than the lowest calibration standard used in the initial calibration. Compare the calibration curves obtained after the runs to the calibration curves obtained under section 10.3. The calibration drift should not exceed the limits set forth in section 13.4. If the drift exceeds this limit, the intervening run or runs should be considered invalid. As an option, the calibration data set which gives the highest sample values may be chosen by the tester.

* * * * *

■ 15. In appendix A–6 to part 60:

■ a. Revise sections 12.1 and 12.2 in Method 16C.

■ b. Remove section 8.2.1.5.2.3 in Method 18.

The revisions read as follows:

Appendix A–6 to Part 60—Test Methods 16 through 18

* * * * *

Method 16C—Determination of Total Reduced Sulfur Emissions From Stationary Sources

* * * * *

12.0 Calculations and Data Analysis

* * * * *

12.1 Nomenclature.

ACE = Analyzer calibration error, percent of calibration span.

CD = Calibration drift, percent.

C_{Dir} = Measured concentration of a calibration gas (low, mid, or high) when introduced in direct calibration mode, ppmv.

C_{H2S} = Concentration of the system performance check gas, ppmv H_2S.

C_S = Measured concentration of the system performance gas when introduced in system calibration mode, ppmv H_2S.

C_{SO2} = Unadjusted sample SO_2 concentration, ppmv.

C_{TRS} = Total reduced sulfur concentration corrected for system performance, ppmv.

CS = Calibration span, ppmv.

DF = Dilution system (if used) dilution factor, dimensionless.

SP = System performance, percent.

12.2 Analyzer Calibration Error. For non-dilution systems, use Equation 16C–1 to calculate the analyzer calibration error for the low-, mid-, and high-level calibration gases.

$$ACE = \frac{C_{Dir} - C_v}{CS} X\ 100 \quad Eq.\ 16C - 1$$

* * * * *

■ 16. In appendix A–7 to part 60:

■ a. Revise sections 9.1, 12.1, and 12.3 in Method 25C.

■ b. Remove section 11.2 in Method 25C.

■ c. Add sections 12.4, 12.5, 12.5.1, and 12.5.2 in Method 25C.

The revisions and additions read as follows:

Appendix A–7 to Part 60—Test Methods 19 through 25E

* * * * *

Method 25C—Determination of Nonmethane Organic Compounds (NMOC) in Landfill Gases

* * * * *

9.0 Quality Control

* * * * *

9.1 Miscellaneous Quality Control Measures.

Section	Quality control measure	Effect
8.4.2	Verify that landfill gas sample contains less than 20 percent N_2 or 5 percent O_2.	Ensures that ambient air was not drawn into the landfill gas sample and gas was sampled from an appropriate location.
10.1, 10.2	NMOC analyzer initial and daily performance checks	Ensures precision of analytical results.

* * * * *

12.0 Data Analysis and Calculations

* * * * *

12.1 Nomenclature.

B_w = Moisture content in the sample, fraction.

C_{N2} = N_2 concentration in the diluted sample gas.

C_{mN2} = Measured N_2 concentration, fraction in landfill gas.

C_{mOx} = Measured Oxygen concentration, fraction in landfill gas.

C_{Ox} = Oxygen concentration in the diluted sample gas.

C_t = Calculated NMOC concentration, ppmv C equivalent.

C_{tm} = Measured NMOC concentration, ppmv C equivalent.

P_b = Barometric pressure, mm Hg.

P_t = Gas sample tank pressure after sampling, but before pressurizing, mm Hg absolute.

P_{tf} = Final gas sample tank pressure after pressurizing, mm Hg absolute.

P_{ti} = Gas sample tank pressure after evacuation, mm Hg absolute.

P_w = Vapor pressure of H_2O (from Table 25C–1), mm Hg.

r = Total number of analyzer injections of sample tank during analysis (where j = injection number, 1 . . . r).

T_t = Sample tank temperature at completion of sampling, °K.

T_{ti} = Sample tank temperature before sampling, °K.

T_{tf} = Sample tank temperature after pressuring, °K.

* * * * *

12.3 Nitrogen Concentration in the landfill gas. Use equation 25C–2 to calculate the measured concentration of nitrogen in the original landfill gas.

$$C_{N2} = \left[\frac{\left(\frac{P_{tf}}{T_{tf}}\right)}{\left(\left(\frac{P_t}{T_t}\right)-\left(\frac{P_{ti}}{T_{ti}}\right)\right)}\right] C_{mN2} \qquad \text{Eq. 25C-2}$$

12.4 Oxygen Concentration in the landfill gas. Use equation 25C–3 to calculate the measured concentration of oxygen in the original landfill gas.

$$C_{Ox} = \left[\frac{\left(\frac{P_{tf}}{T_{tf}}\right)}{\left(\left(\frac{P_t}{T_t}\right)-\left(\frac{P_{ti}}{T_{ti}}\right)\right)}\right] C_{mOx} \qquad \text{Eq. 25C-3}$$

12.5 You must correct the NMOC Concentration for the concentration of nitrogen or oxygen based on which gas or gases passes the requirements in section 9.1.

12.5.1 NMOC Concentration with nitrogen correction. Use Equation 25C–4 to calculate the concentration of NMOC for each sample tank when the nitrogen concentration is less than 20 percent.

$$C_t = \frac{\frac{P_{tf}}{T_{tf}}}{\left(\frac{P_t}{T_t}-\frac{P_{ti}}{T_{ti}}\right)\left(1-\frac{99}{78}C_{N2}\right)-B_w}\frac{1}{r}\sum_{j=1}^{r} C_{tm(j)} \qquad \text{Eq. 25C-4}$$

12.5.2 NMOC Concentration with oxygen correction. Use Equation 25C–4 to calculate the concentration of NMOC for each sample tank if the landfill gas oxygen is less than 5 percent and the landfill gas nitrogen concentration is greater than 20 percent.

$$C_t = \frac{\frac{P_{tf}}{T_{tf}}}{\left(\frac{P_t}{T_t} - \frac{P_{ti}}{T_{ti}}\right)\left(1 - \frac{99}{21}C_{Ox}\right) - B_w} \frac{1}{r} \sum_{j=1}^{r} C_{tm(j)} \qquad \text{Eq. 25C-5}$$

* * * * *

■ 17. In appendix A–8 to part 60:

■ a. Revise section 13.3 in Method 26.

■ b. Revise sections 4.3, 6.1.7, 8.1.5, and 8.1.6 in Method 26A.

■ c. Revise section 8.2.9.3 in Method 29.

■ d. Add section 10.4 and 10.5 in Method 29.

■ e. Revise the section heading for section 8.1 in Method 30A.

■ f. Revise the section heading for section 8.1 and section 8.3.3.8 in Method 30B.

The revisions and additions read as follows:

Appendix A–8 to Part 60—Test Methods 26 through 30B

* * * * *

Method 26—Determination of Hydrogen Chloride Emissions From Stationary Sources

* * * * *

13.0 Method Performance

* * * * *

13.3 Detection Limit. A typical IC instrumental detection limit for $C1^-$ is 0.2 μg/ml. Detection limits for the other analyses should be similar. Assuming 50 ml liquid recovered from both the acidified impingers, and the basic impingers, and 0.12 dscm of stack gas sampled, then the analytical detection limit in the stack gas will be about 0.05 ppm for HCl and Cl_2, respectively.

* * * * *

Method 26A—Determination of Hydrogen Halide and Halogen Emissions From Stationary Sources Isokinetic Method

* * * * *

4.0 Interferences

* * * * *

4.3 Dissociating chloride salts (*e.g.,* ammonium chloride) at elevated temperatures interfere with halogen acid measurement in this method. Maintaining particulate probe/filter temperatures at 120 ± 14 °C (248 ± 25 °F) minimizes this interference.

* * * * *

6.0. Equipment and Supplies

* * * * *

6.1.7 Heating System. Any heating system capable of monitoring and maintaining temperature around the filter shall be used to ensure a sample gas temperature exiting the filter of 120 ± 14 °C (248 ± 25 °F) during sampling or such other temperature as specified by an applicable subpart of the standards. The monitoring and regulation of the temperature around the filter may be done with the filter temperature sensor or another temperature sensor.

* * * * *

8.0 Sample Collection, Preservation, Storage, and Transport

* * * * *

8.1.5 Sampling Train Operation. Follow the general procedure given in Method 5, section 8.5. Maintain a temperature around the probe, through the filter (and cyclone, if used) of 120 ± 14 °C (248 ± 25 °F) or such other temperature as specified by an applicable subpart of the standards to avoid dissociating halogen salts and to maintain acid gases in the vapor phase since it is extremely difficult to purge acid gases off these components. (These components are not quantitatively recovered and hence any collection of acid gases on these components will result in potential under reporting these emissions.) For each run, record the data required on a data sheet such as the one shown in Method 5, Figure 5–3. If the condensate impinger becomes too full, it may be emptied, recharged with 50 ml of 0.1 N H_2SO_4, and replaced during the sample run. The condensate emptied must be saved and included in the measurement of the volume of moisture collected and included in the sample for analysis. The additional 50 ml of absorbing reagent must also be considered in calculating the moisture. Before the sampling train integrity is compromised by removing the impinger, conduct a leak-check as described in Method 5, section 8.4.2.

8.1.6 Post-Test Moisture Removal (Optional). When the optional cyclone is included in the sampling train or when liquid is visible on the filter at the end of a sample run even in the absence of a cyclone, perform the following procedure. Upon completion of the test run, connect the ambient air conditioning tube at the probe inlet and operate the train with the filter heating system between 120 and 134 °C (248 and 273 °F) at a low flow rate (*e.g.*, ΔH = 1 in. H_2O) to vaporize any liquid and hydrogen halides in the cyclone or on the filter and pull them through the train into the impingers. After 30 minutes, turn off the flow, remove the conditioning tube, and examine the cyclone and filter for any visible liquid. If liquid is visible, repeat this step for 15 minutes and observe again. Keep repeating until the cyclone is dry.

Note: It is critical that this is repeated until the cyclone is completely dry.

* * * * *

Method 29—Determination of Metals Emissions From Stationary Sources

* * * * *

8.0 Sample Collection, Preservation, Transport, and Storage

* * * * *

8.2.9.3 Wash the two permanganate impingers with 25 ml of 8 N HCl, and place the wash in a separate sample container labeled No. 5C containing 200 ml of water. First, place 200 ml of water in the container. Then wash the impinger walls and stem with the 8 N HCl by turning the impinger on its side and rotating it so that the HCl contacts all inside surfaces. Use a total of only 25 ml of 8 N HCl for rinsing *both permanganate impingers combined.* Rinse the first impinger, then pour the actual rinse used for the first impinger into the second impinger for its rinse. Finally, pour the 25 ml of 8 N HCl rinse carefully into the container with the 200 ml of water. Mark the height of the fluid level on the outside of the container in order to determine if leakage occurs during transport.

* * * * *

10.0 Calibration and Standardization

* * * * *

10.4 Field Balance Calibration Check. Check the calibration of the balance used to weigh impingers using ASTM E617–13 ''Standard Specification for Laboratory Weights and Precision Mass Standards'' (incorporated by reference—see 40 CFR 60.17) Class 3 tolerance (or better) weight of at least 500g or within 50g of a loaded impinger weight. Daily before use, the field balance must measure the weight within ± 0.5g of the certified mass. If the daily balance calibration check fails, perform corrective measures and repeat check before use of balance.

10.5 Analytical Balance Calibration. Perform a multipoint calibration (at least five points spanning the operational range) of the analytical balance before the first use and semiannually, thereafter. The calibration of the analytical balance must be conducted using ASTM E617–13 ''Standard Specification for Laboratory Weights and Precision Mass Standards'' (incorporated by reference—see 40 CFR 60.17) Class 2 (or better) tolerance weights. Audit the balance each day it is used for gravimetric measurements by weighing at least one ASTM E617–13 Class 2 tolerance (or better) calibration weight that corresponds to 50 to 150 percent of the weight of one filter or 5 g. If the scale cannot reproduce the value of the calibration weight to within 0.5 mg of the certified mass, perform corrective measures, and conduct the multipoint calibration before use.

* * * * *

Method 30A—Determination of Total Vapor Phase Mercury Emissions From Stationary Sources (Instrumental Analyzer Procedure)

* * * * *

8.0 Sample Collection

* * * * *

8.1 Selection of Sampling Sites and Sampling Points. * * *

* * * * *

Method 30B—Determination of Total Vapor Phase Mercury Emissions From Coal-Fired Combustion Sources Using Carbon Sorbent Traps

* * * * *

8.0 Sample Collection and Handling

* * * * *

8.1 Selection of Sampling Sites and Sampling Points. * * *

* * * * *

8.3.3.8 Sample Handling, Preservation, Storage, and Transport. While the performance criteria of this approach provides for verification of appropriate sample handling, it is still important that the user consider, determine, and plan for suitable sample preservation, storage, transport, and holding times for these measurements. Therefore, procedures in ASTM D6911–15 ''Standard Guide for Packaging and Shipping Environmental Samples for Laboratory Analysis'' (incorporated by reference—see 40 CFR 60.17) shall be followed for all samples, where appropriate.

* * * * *

■ 18. In appendix B to part 60:

■ a. Add the entry ''Performance Specification 16—Specifications and Test Procedures for Predictive Emission Monitoring Systems in Stationary Sources'' at the end of the table of contents for appendix B to part 60.

■ b. Add a sentence to the end of section 8.1(2)(i) in Performance Specification 1.

■ c. Revise sections 3.11, 6.1.1, 16.3.2, and Figure 2–1 in section 18.0 in Performance Specification 2.

■ d. Revise section 13.2 in Performance Specification 3.

■ e. Revise sections 8.3, 8.3.1, and 13.3 in Performance Specification 4A.

■ f. Revise sections 12.1 and 13.1 in Performance Specification 11.

■ g. Revise section 9.1.2 in Performance Specification 15.

■ h. Add sections 14.0 and 15.0 in Performance Specification 15.

■ i. Revise the introductory text of section 12.2.3 in Performance Specification 16.

■ j. Revise table 16–1 in Performance Specification 16.

The revisions and additions read as follows:

Appendix B to Part 60—Performance Specifications

* * * * *

Performance Specification 1—Specifications and Test Procedures for Continuous Opacity Monitoring Systems in Stationary Sources

* * * * *

8.0 What Performance Procedures Are Required To Comply With PS–1?

* * * * *

8.1 * * *

(2) * * *

(i) Measurement Location. * * * Alternatively, you may select a measurement location specified in paragraph 8.1(2)(ii) or 8.1(2)(iii).

* * * * *

Performance Specification 2—Specifications and Test Procedures for SO_2 and NO_X Continuous Emission Monitoring Systems in Stationary Sources

* * * * *

3.0 Definitions

* * * * *

3.11 *Span Value* means the calibration portion of the measurement range as specified in the applicable regulation or other requirement. If the span is not specified in the applicable regulation or other requirement, then it must be a value approximately equivalent to two times the emission standard.

* * * * *

6.0 Equipment and Supplies

* * * * *

6.1.1 Data Recorder. The portion of the CEMS that provides a record of analyzer output. The data recorder may record other pertinent data such as effluent flow rates, various instrument temperatures or abnormal CEMS operation. The data recorder output range must include the full range of expected concentration values in the gas stream to be sampled including zero and span values.

* * * * *

16.0 Alternative Procedures

* * * * *

16.3.2 For diluent CEMS:

RA = $\bar{d}$; ≤0.7 percent O_2 or CO_2, as applicable.

Note: Waiver of the relative accuracy test in favor of the alternative RA procedure does not preclude the requirements to complete the CD tests nor any other requirements specified in an applicable subpart for reporting CEMS data and performing CEMS drift checks or audits.

* * * * *

18.0 Tables, Diagrams, Flowcharts, and Validation Data

Figure 2–1. Calibration Drift Determination

TABLE 2–1—t-VALUES

N [a]	$t_{0.975}$	n [a]	$t_{0.975}$	n [a]	$t_{0.975}$
2	12.706	7	2.447	12	2.201
3	4.303	8	2.365	13	2.179
4	3.182	9	2.306	14	2.160
5	2.776	10	2.262	15	2.145
6	2.571	11	2.228	16	2.131

[a] The values in this table are already corrected for n − 1 degrees of freedom. Use n equal to the number of individual values.

TABLE 2–2—MEASUREMENT RANGE

Measurement point	Pollutant monitor	Diluent monitor for	
		CO_2	O_2
1	20–30% of span value	5–8% by volume	4–6% by volume.
2	50–60% of span value	10–14% by volume	8–12% by volume.

	Day	Date and time	Calibration value (C)	Monitor value (M)	Difference (C − M)	Percent of span value (C − M)/span value × 100
Low-level						

	Day	Date and time	Calibration value (C)	Monitor value (M)	Difference (C − M)	Percent of span value (C − M)/span value × 100
High-level						

* * * * *

Performance Specification 3—Specifications and Test Procedures for O_2 and CO_2 Continuous Emission Monitoring Systems in Stationary Sources

* * * * *

13.0 Method Performance

* * * * *

13.2 CEMS Relative Accuracy Performance Specification. The RA of the CEMS must be no greater than 20.0 percent of the mean value of the reference method (RM) data when calculated using equation 3–1. The results are also acceptable if the result of Equation 3–2 is less than or equal to 1.0 percent O2 (or CO2).

$$RA = \frac{\left[\left|\bar{d}\right| + \left|CC\right|\right]}{\overline{RM}} \times 100 \qquad \text{Eq. 3-1}$$

Where:

$\bar{d}$ = Absolute value of the mean of the differences (from Equation 2–3 of Performance Specification 2).

$|CC|$ = Absolute value of the confidence coefficient (from Equation 2–5 of Performance Specification 2).

$\overline{RM}$ = Average Reference Method value.

$$\left|\overline{RM} - \overline{CEMS}\right| \qquad \text{Eq. 3-2}$$

$\overline{RM}$ = Average Reference Method value.

$\overline{CEMS}$ = Average CEMS value.

* * * * *

Performance Specification 4A—Specifications and Test Procedures for Carbon Monoxide Continuous Emission Monitoring Systems in Stationary Sources

* * * * *

8.0 Sample Collection, Preservation, Storage, and Transport

* * * * *

8.3 Response Time Test Procedure. The response time test applies to all types of CEMS, but will generally have significance only for extractive systems. The entire system is checked with this procedure including applicable sample extraction and transport, sample conditioning, gas analyses, and data recording.

8.3.1 Introduce zero gas into the system. When the system output has stabilized (no change greater than 1 percent of full scale for 30 sec), introduce an upscale calibration gas and wait for a stable value. Record the time (upscale response time) required to reach 95 percent of the final stable value. Next, reintroduce the zero gas and wait for a stable reading before recording the response time (downscale response time). Repeat the entire procedure three times and determine the mean upscale and downscale response times. The slower or longer of the two means is the system response time.

* * * * *

13.0 Method Performance

* * * * *

13.3 Response Time. The CEMS response time shall not exceed 2.0 min to achieve 95 percent of the final stable value.

* * * * *

Performance Specification 11—Specifications and Test Procedures for Particulate Matter Continuous Emission Monitoring Systems at Stationary Sources

* * * * *

12.0 What calculations and data analyses are needed?

* * * * *

12.1 How do I calculate upscale drift and zero drift? You must determine the difference in your PM CEMS output readings from the established reference values (zero and upscale check values) after a stated period of operation during which you performed no unscheduled maintenance, repair, or adjustment.

(1) Calculate the upscale drift (UD) using Equation 11–1:

$$UD = \frac{|R_{CEM} - R_U|}{R_r} \times 100 \qquad \text{(Eq. 11-1)}$$

Where:

UD = The upscale (high-level) drift of your PM CEMS in percent,

R_{CEM} = The measured PM CEMS response to the upscale reference standard, and

R_U = The pre-established numerical value of the upscale reference standard.

R_r = The response range of the analyzer.

(2) Calculate the zero drift (ZD) using Equation 11–2:

$$ZD = \frac{|R_{CEM} - R_L|}{R_r} \times 100 \qquad \text{(Eq. 11-2)}$$

Where:

ZD = The zero (low-level) drift of your PM CEMS in percent,

R_{CEM} = The measured PM CEMS response to the zero reference standard,

R_L = The pre-established numerical value of the zero reference standard, and

R_r = The response range of the analyzer.

* * * * *

13.0 What are the performance criteria for my PM CEMS?

* * * * *

13.1 What is the 7-day drift check performance specification? Your daily PM CEMS internal drift checks must demonstrate that the average daily drift of your PM CEMS does not deviate from the value of the reference light, optical filter, Beta attenuation signal, or other technology-suitable reference standard by more than 2 percent of the response range. If your CEMS includes diluent and/or auxiliary monitors (for temperature, pressure, and/or moisture) that are employed as a necessary part of this performance specification, you must determine the calibration drift separately for each ancillary monitor in terms of its respective output (see the appropriate performance specification for the diluent CEMS specification). None of the calibration drifts may exceed their individual specification.

* * * * *

Performance Specification 15—Performance Specification for Extractive FTIR Continuous Emissions Monitor Systems in Stationary Sources

* * * * *

9.0 Quality Control

* * * * *

9.1.2 Test Procedure. Spike the audit sample using the analyte spike procedure in section 11. The audit sample is measured directly by the FTIR system (undiluted) and then spiked into the effluent at a known dilution ratio. Measure a series of spiked and unspiked samples using the same procedures as those used to analyze the stack gas. Analyze the results using sections 12.1 and 12.2. The measured concentration of each analyte must be within ±5 percent of the expected concentration (plus the uncertainty), *i.e.,* the calculated correction factor must be within 0.93 and 1.07 for an audit with an analyte uncertainty of ±2 percent.

* * * * *

14.0 Pollution Prevention [Reserved]

15.0 Waste Management [Reserved]

* * * * *

Performance Specification 16—Specifications and Test Procedures for Predictive Emission Monitoring Systems in Stationary Sources

* * * * *

12.0 Calculations and Data Analysis

* * * * *

12.2.3 Confidence Coefficient. Calculate the confidence coefficient using Equation 16–3 and Table 16–1 for n − 1 degrees of freedom.

* * * * *

17.0 Tables, Diagrams, Flowcharts, and Validation Data

TABLE 16–1—t-VALUES FOR ONE-SIDED, 97.5 PERCENT CONFIDENCE INTERVALS FOR SELECTED SAMPLE SIZES *

n − 1	$t_{0.025}$
1	12.706
2	4.303
3	3.182
4	2.776
5	2.571
6	2.447
7	2.365
8	2.306
9	2.262
10	2.228
11	2.201

TABLE 16–1—t-VALUES FOR ONE-SIDED, 97.5 PERCENT CONFIDENCE INTERVALS FOR SELECTED SAMPLE SIZES *—Continued

n − 1	$t_{0.025}$
12	2.179
13	2.160
14	2.145
15	2.131
16	2.120
17	2.110
18	2.101
19	2.093
20	2.086
21	2.080
22	2.074
23	2.069
24	2.064
25	2.060
26	2.056
27	2.052
>28	t-Table

* n − 1 equals the degrees of freedom.

* * * * *

■ 19. Revise section 12.0 paragraphs (3) and (4) in Procedure 2 of appendix F to part 60 to read as follows:

Appendix F to Part 60—Quality Assurance Procedures

* * * * *

Procedure 2—Quality Assurance Requirements for Particulate Matter Continuous Emission Monitoring Systems at Stationary Sources

* * * * *

12.0 What calculations and data analysis must I perform for my PM CEMS?

* * * * *

(3) How do I calculate daily upscale and zero drift? You must calculate the upscale drift using Equation 2–2 and the zero drift using Equation 2–3:

$$UD = \frac{|R_{CEM} - R_U|}{R_r} \times 100 \qquad \text{(Eq. 2-2)}$$

Where:
UD = The upscale drift of your PM CEMS, in percent,
R_{CEM} = Your PM CEMS response to the upscale check value, and
R_U = The upscale check value.
R_r = The response range of the analyzer.

$$ZD = \frac{|R_{CEM} - R_L|}{R_r} \times 100 \qquad \text{(Eq. 2-3)}$$

Where:
ZD = The zero (low-level) drift of your PM CEMS, in percent,
R_{CEM} = Your PM CEMS response of the zero check value,
R_L = The zero check value.
R_r = The response range of the analyzer.

(4) How do I calculate SVA accuracy? You must use Equation 2–4 to calculate the accuracy, in percent, for each of the three SVA tests or the daily sample volume check:

$$Accuracy = \frac{(V_R - V_M)}{V_M} \times 100 \qquad \text{(Eq. 2-4)}$$

Where:
V_M = Sample gas volume determined/reported by your PM CEMS (*e.g.,* dscm),
V_R = Sample gas volume measured by the independent calibrated reference device (*e.g.,* dscm) for the SVA or the reference value for the daily sample volume check.

Note: Before calculating SVA accuracy, you must correct the sample gas volumes measured by your PM CEMS and the independent calibrated reference device to the same basis of temperature, pressure, and moisture content. You must document all data and calculations.

* * * * *

PART 61–NATIONAL EMISSION STANDARDS FOR HAZARDOUS AIR POLLUTANTS

■ 20. The authority citation for part 61 continues to read as follows:

Authority: 42 U.S.C. 7401 *et seq.*

■ 21. In § 61.13, revise paragraph (e)(1)(i) to read as follows:

§ 61.13 Emission tests and waiver of emission tests.

* * * * *

(e) * * *

(1) * * *

(i) The source owner, operator, or representative of the tested facility shall obtain an audit sample, if commercially available, from an AASP for each test method used for regulatory compliance purposes. No audit samples are required for the following test methods: Methods 3A and 3C of appendix A–3 of part 60 of this chapter; Methods 6C, 7E, 9, and 10 of appendix A–4 of part 60; Method 18 and 19 of appendix A–6 of part 60; Methods 20, 22, and 25A of appendix A–7 of part 60; Methods 30A and 30B of appendix A–8 of part 60; and Methods 303, 318, 320, and 321 of appendix A of part 63 of this chapter. If multiple sources at a single facility are tested during a compliance test event, only one audit sample is required for each method used during a compliance test. The compliance authority responsible for the compliance test may waive the requirement to include an audit sample if they believe that an audit sample is not necessary. ''Commercially available'' means that two or more independent AASPs have blind audit samples available for purchase. If the source owner, operator, or representative cannot find an audit sample for a specific method, the owner, operator, or representative shall consult the EPA Web site at the following URL, *www.epa.gov/ttn/emc*, to confirm whether there is a source that can supply an audit sample for that method. If the EPA Web site does not list an available audit sample at least 60 days prior to the beginning of the compliance test, the source owner, operator, or representative shall not be required to include an audit sample as part of the quality assurance program for the compliance test. When ordering an audit sample, the source owner, operator, or representative shall give the sample provider an estimate for the concentration of each pollutant that is emitted by the source or the estimated concentration of each pollutant based on the permitted level and the name, address, and phone number of the compliance authority. The source owner, operator, or representative shall report the results for the audit sample along with a summary of the emission test results for the audited pollutant to the compliance authority and shall report the results of the audit sample to the AASP. The source owner, operator, or representative shall make both reports at the same time and in the same manner or shall report to the compliance authority first and then report to the AASP. If the method being audited is a method that allows the samples to be analyzed in the field and the tester plans to analyze the samples in the field, the tester may analyze the audit samples prior to collecting the emission samples provided a representative of the compliance authority is present at the testing site. The tester may request, and the compliance authority may grant, a waiver to the requirement that a representative of the compliance authority must be present at the testing site during the field analysis of an audit sample. The source owner, operator, or representative may report the results of the audit sample to the compliance authority and then report the results of the audit sample to the AASP prior to collecting any emission samples. The test protocol and final test report shall document whether an audit sample was ordered and utilized and the pass/fail results as applicable.

* * * * *

■ 22. Revise the section heading for section 11.7.3 in Method 107 of appendix B to part 61 to read as follows:

Appendix B to Part 61—Test Methods

* * * * *

Method 107—Determination of Vinyl Chloride Content of In-Process Wastewater Samples, and Vinyl Chloride Content of Polyvinyl Chloride Resin Slurry, Wet Cake, and Latex Samples

* * * * *

11.0 Analytical Procedure

* * * * *

11.7.3 Dispersion Resin Slurry and Latex Samples. * * *

* * * * *

PART 63—NATIONAL EMISSION STANDARDS FOR HAZARDOUS AIR POLLUTANTS FOR SOURCE CATEGORIES

■ 23. The authority citation for part 63 continues to read as follows:

Authority: 42 U.S.C. 7401 *et seq.*

■ 24. In § 63.7:

■ a. Revise paragraph (c)(2)(iii)(A).

■ b. Add paragraph (g)(2).

The revision and addition read as follows:

§ 63.7 Performance testing requirements.

* * * * *

(c) * * *

(2) * * *

(iii) * * *

(A) The source owner, operator, or representative of the tested facility shall obtain an audit sample, if commercially available, from an AASP for each test method used for regulatory compliance purposes. No audit samples are required for the following test methods: Methods 3A and 3C of appendix A–3 of part 60 of this chapter; Methods 6C, 7E, 9, and 10 of appendix A–4 of part 60; Methods 18 and 19 of appendix A–6 of part 60; Methods 20, 22, and 25A of appendix A–7 of part 60; Methods 30A and 30B of appendix A–8 of part 60; and Methods 303, 318, 320, and 321 of appendix A of this part. If multiple sources at a single facility are tested during a compliance test event, only one audit sample is required for each method used during a compliance test. The compliance authority responsible for the compliance test may waive the requirement to include an audit sample if they believe that an audit sample is not necessary. ''Commercially available'' means that two or more independent AASPs have blind audit samples available for purchase. If the source owner, operator, or representative cannot find an audit sample for a specific method, the owner, operator, or representative shall consult the EPA Web site at the following URL, *www.epa.gov/ttn/emc*, to confirm whether there is a source that can supply an audit sample for that method. If the EPA Web site does not list an available audit sample at least 60 days prior to the beginning of the compliance test, the source owner, operator, or representative shall not be required to include an audit sample as part of the quality assurance program for the compliance test. When ordering an audit sample, the source owner, operator, or representative shall give the sample provider an estimate for the concentration of each pollutant that is emitted by the source or the estimated concentration of each pollutant based on the permitted level and the name, address, and phone number of the compliance authority. The source owner, operator, or representative shall report the results for the audit sample along with a summary of the emission test results for the audited pollutant to the compliance authority and shall report the results of the audit sample to the AASP. The source owner, operator, or representative shall make both reports at the same time and in the same manner or shall report to the compliance authority first and then report to the AASP. If the method being audited is a method that allows the samples to be analyzed in the field and the tester plans to analyze the samples in the field, the tester may analyze the audit samples prior to collecting the emission samples provided a representative of the compliance authority is present at the testing site. The tester may request, and the compliance authority may grant, a waiver to the requirement that a representative of the compliance authority must be present at the testing site during the field analysis of an audit sample. The source owner, operator, or representative may report the results of the audit sample to the compliance authority and then report the results of the audit sample to the AASP prior to collecting any emission samples. The test protocol and final test report shall document whether an audit sample was ordered and utilized and the pass/fail results as applicable.

* * * * *

(g) * * *

(2) Contents of report (electronic or paper submitted copy). Unless otherwise specified in a relevant standard or test method, or as otherwise approved by the Administrator in writing, results of a performance test shall include general identification information for the facility including a mailing address, the actual address, the owner or operator or responsible official (where they are applicable) or an appropriate representative and an email address for this person, and the appropriate Federal Registry System (FRS) number for the facility; the purpose of the test including the regulation requiring the test, the pollutant being measured, the units of the standard or the pollutant emissions units, and any process parameter component; a brief process description; a complete unit description, including a description of feed streams and control devices, the appropriate source classification code (SCC), and the latitude and longitude of the emission point being tested, and the permitted maximum process rate (where applicable); sampling site description; description of sampling and analysis procedures and any modifications to standard procedures; quality assurance procedures; record of operating conditions, including operating parameters for which limits are being set, during the test; record of preparation of standards; record of calibrations; raw data sheets for field sampling; raw data sheets for field and laboratory analyses; chain-of-custody documentation; explanation of laboratory data qualifiers; example calculations of all applicable stack gas parameters, emission rates, percent reduction rates, and analytical results, as applicable; identification information for the company conducting the performance test including a contact person and his/her email address; and any other information required by the test method, a relevant standard, or the Administrator.

* * * * *

■ 25. Revise sections 13.1, 13.4, and 13.4.1 in Method 320 of appendix A to part 63 to read as follows:

Appendix A to Part 63—Test Methods Pollutant Measurement Methods From Various Waste Media

* * * * *

Test Method 320—Measurement of Vapor Phase Organic and Inorganic Emissions by Extractive Fourier Transform Infrared (FTIR) Spectroscopy

* * * * *

13.0 Method Validation Procedure

* * * * *

13.1 Section 6.0 of Method 301 (40 CFR part 63, appendix A), the Analyte Spike procedure, is used with these modifications. The statistical analysis of the results follows section 12.0 of EPA Method 301. Section 3 of this method defines terms that are not defined in Method 301.

* * * * *

13.4 *Statistical Treatment.* The statistical procedure of EPA Method 301 of this appendix, section 12.0 is used to evaluate the bias and precision. For FTIR testing a validation ''run'' is defined as spectra of 24 independent samples, 12 of which are spiked with the analyte(s) and 12 of which are not spiked.

13.4.1 *Bias.* Determine the bias (defined by EPA Method 301 of this appendix, section 12.1.1) using equation 7:

$B = S_M - CS$ (7)

Where:

B = Bias at spike level.

S_m = Mean concentration of the analyte spiked samples.

CS = Expected concentration of the spiked samples.

* * * * *

[FR Doc. 2015–20768 Filed 9–4–15; 8:45 am]

BILLING CODE 6560–50–P

FEDERAL REGISTER

Vol. 80 Tuesday,

No. 173 September 8, 2015

Part V

Department of Health and Human Services

45 CFR Part 92

Nondiscrimination in Health Programs and Activities; Proposed Rule

DEPARTMENT OF HEALTH AND HUMAN SERVICES

Office of the Secretary

45 CFR Part 92

RIN 0945–AA02

Nondiscrimination in Health Programs and Activities

AGENCY: Office for Civil Rights (OCR), Office of the Secretary, HHS.

ACTION: Notice of proposed rulemaking.

SUMMARY: The Department of Health and Human Services (HHS or ''the Department'') is issuing this proposed rule on Section 1557 of the Affordable Care Act (ACA) (Section 1557). Section 1557 prohibits discrimination on the basis of race, color, national origin, sex, age, or disability in certain health programs and activities. Section 1557(c) of the ACA authorizes the Secretary of the Department to promulgate regulations to implement the nondiscrimination requirements of Section 1557. In addition, the Secretary is authorized to prescribe regulations for the Department's governance, conduct, and performance of its business, including, here, how HHS will apply the standards of Section 1557 to HHS-administered health programs and activities.

DATES: Submit comments on or before November 9, 2015.

ADDRESSES: You may submit comments, identified by RIN Number 0945–AA02, by any of the following methods:

- *Federal eRulemaking Portal:* You may submit electronic comments at *http://www.regulations.gov*. Follow the instructions for submitting electronic comments. Attachments should be in Microsoft Word or Excel; however, we prefer Microsoft Word.
- *Regular, Express, or Overnight Mail:* You may mail written comments (one original and two copies) to the following address only: U.S. Department of Health and Human Services, Office for Civil Rights, Attention: 1557 NPRM (RIN 0945–AA02), Hubert H. Humphrey Building, Room 509F, 200 Independence Avenue SW., Washington, DC 20201. Mailed comments may be subject to delivery delays due to security procedures. Please allow sufficient time for mailed comments to be timely received in the event of delivery delays.
- *Hand Delivery or Courier:* If you prefer, you may deliver (by hand or courier) your written comments (one original and two copies) to the following address only: Office for Civil Rights, Attention: 1557 NPRM (RIN 0945–AA02), Hubert H. Humphrey Building, Room 509F, 200 Independence Avenue SW., Washington, DC 20201. (Because access to the interior of the Hubert H. Humphrey Building is not readily available to persons without Federal government identification, commenters are encouraged to leave their comments in the mail drop slots located in the main lobby of the building.)
- *Inspection of Public Comments:* All comments received before the close of the comment period will be available for public inspection, including any personally identifiable or confidential business information that is included in a comment. We will post all comments received before the close of the comment period at *http://www.regulations.gov*.

FOR FURTHER INFORMATION CONTACT: Claudia Adams, at (800) 368–1019 or (800) 537–7697 (TDD).

SUPPLEMENTARY INFORMATION:

I. Background

Section 1557 of the ACA provides that an individual shall not, on the grounds prohibited under Title VI of the Civil Rights Act of 1964 (Title VI), 42 U.S.C. 2000d *et seq.* (race, color, national origin), Title IX of the Education Amendments of 1972 (Title IX), 20 U.S.C. 1681 *et seq.* (sex), the Age Discrimination Act of 1975 (Age Act), 42 U.S.C. 6101 *et seq.* (age), or Section 504 of the Rehabilitation Act of 1973 (Section 504), 29 U.S.C. 794 (disability), be excluded from participation in, be denied the benefits of, or be subjected to discrimination under any health program or activity, any part of which is receiving Federal financial assistance, or under any program or activity that is administered by an Executive Agency or any entity established under Title I of the Act or its amendments. Section 1557 states that the enforcement mechanisms provided for and available under Title VI, Title IX, Section 504, or the Age Act shall apply for purposes of addressing violations of Section 1557. The Department is responsible for developing regulations to implement Section 1557.

On August 1, 2013, the Office for Civil Rights of the Department (OCR) published a Request for Information (RFI) in the **Federal Register** to obtain information that would assist OCR in drafting the proposed regulation.[1] The RFI solicited information on issues arising under Section 1557. OCR received 402 comments. Of the total comments, one-quarter (99) were from organizational commenters, with the remainder from individuals. Of the organizational comments, one-third (33) were from civil rights/advocacy groups with over half of these (17) coming from organizations serving lesbian, gay, bisexual, or transgender (LGBT) individuals. Six comments were received from health care providers (including two local government health agencies) and two were from health insurance providers or provider organizations. Of the comments from individuals, 239 were personal testimonies from transgender individuals describing their experiences of discrimination in the health care setting.

OCR has carefully reviewed all comments received, and has referenced them where appropriate and relevant in this preamble. The proposed rule both clarifies and codifies existing nondiscrimination requirements, and also sets forth new standards to implement Section 1557, particularly with respect to the prohibition of discrimination on the basis of sex in health programs other than those provided by educational institutions and the prohibition of various forms of discrimination in health programs administered by the Department and entities established under Title I of the ACA. The Department invites comment on this proposed rule by all interested parties, including comment from Tribes on application of the rule to them.

Subpart A—General Provisions

Purpose and Effective Date (§ 92.1)

Proposed § 92.1 states that the purpose of this part is to implement Section 1557 of the ACA, which prohibits discrimination in certain health programs and activities on the grounds prohibited under Title VI, Title IX, the Age Act, and Section 504, which together prohibit discrimination on the basis of race, color, national origin, sex, age, or disability.

Section 92.1 also establishes that the effective date of the Section 1557 implementing regulation shall be 60 days after the publication of the final rule in the **Federal Register**.

Application (§ 92.2)

Section 1557 applies to all health programs and activities, any part of which receives Federal financial assistance from any Federal agency. In addition, Section 1557 applies to all programs and activities that are administered by an Executive Agency or any entity established under Title I of the ACA.

[1] 78 FR 46558 (Aug. 1, 2013).

OCR proposes in § 92.2(a) to apply the rule, except as otherwise provided in this part, to: (1) All health programs and activities, any part of which receives Federal financial assistance administered by HHS;[2] (2) health programs and activities administered by the Department, including the Federally-facilitated Marketplaces; and (3) health programs and activities administered by entities established under Title I of the ACA, including the State-based Marketplaces.

Section 92.2(b) provides limitations to the application of the proposed rule. In this section, addressing limitations in the statutes referenced in Section 1557, and in Subpart B, which incorporates exceptions in the regulations implementing the statutes referenced in Section 1557, we have adopted the existing limitations and exceptions that already govern the health programs and activities subject to Section 1557. These limitations and exceptions are found in the Age Act and in the regulations implementing the Age Act, Section 504, and Title VI, which apply to all programs and activities that receive Federal financial assistance.

Thus, § 92.2(b)(1) incorporates the exclusions found in the Age Act, such that the provisions of this proposed rule do not apply to any age distinction contained in that part of a Federal, State, or local statute or ordinance adopted by an elected, general purpose legislative body which provides any benefits or assistance to persons based on age, establishes criteria for participation in age-related terms, or describes intended beneficiaries to target groups in age-related terms.[3]

By contrast, we are requesting comment on whether the exemptions found in Title IX and its implementing regulation should be incorporated into this proposed rule. Unlike the Age Act, Section 504, and Title VI, which apply to all programs and activities that receive Federal financial assistance, Title IX applies only in the context of education programs and not to the health programs and activities subject to this proposed rule. In addition, many of Title IX's limitations and exceptions do not readily apply in a context that is grounded in health care, rather than education. For example, Title IX exempts from its prohibitions on sex discrimination certain institutions of undergraduate higher education, military and merchant marine educational institutions, and membership practices of social fraternities and sororities and voluntary youth service organizations.

In the RFI, OCR specifically inquired as to what exceptions, if any, should apply in the context of sex discrimination in health programs and activities. Nearly all commenters who provided a response to this inquiry indicated that Section 1557 includes only one exception—that the statute applies except as otherwise provided in Title I of the ACA. To this end, commenters argued that nothing in the language or legislative history of Section 1557 allows for any other limitations or exceptions regarding its application, highlighting that exceptions to general rules like Section 1557's antidiscrimination provision must be read strictly and narrowly.

We continue to seek comment on whether the regulation should include any specific exemptions for health providers, health plans, or other covered entities with respect to requirements of the proposed rule related to sex discrimination, including the particular requirements that are discussed in this proposed rule.[4] For example, HHS wants to ensure that the rule has the proper scope and appropriately protects sincerely held religious beliefs to the extent that those beliefs conflict with provisions of the regulation. We note that certain protections already exist with respect to religious beliefs, particularly with respect to the provision of certain health-related services; for example, this proposed rule would not displace the protections afforded by provider conscience laws,[5] the Religious Freedom Restoration Act,[6] provisions in the ACA related to abortion services,[7] or regulations issued under the ACA related to preventive health services.[8] We seek comment on the extent to which these existing protections would provide sufficient safeguards for religious concerns in the context of the proposed rule.

At the same time, a fundamental purpose of the ACA is to ensure that vital health care services are broadly and nondiscriminatorily available to individuals throughout the country. As a result, we seek comment on any health care consequences that would ensue were the regulation to provide additional exemptions.

Finally, we seek comment on the scope of additional exemptions, if any, that should be included and the processes for claiming them, including whether those processes should track those used under Title IX, at 45 CFR 86.12.

Relationship to Other Laws (§ 92.3)

Proposed § 92.3 explains the relationship of this part to existing laws. Paragraph (a) provides that Section 1557 is not intended to apply lesser standards for the protection of individuals from discrimination than the standards under Title VI, Title IX, Section 504, the Age Act, or the regulations issued pursuant to those laws. Consistent with the statute, paragraph (b) states that nothing in this part shall be interpreted to invalidate or limit the existing rights, remedies, procedures, or legal standards available to individuals aggrieved under other Federal civil rights laws or to supersede State or local laws that provide greater or equal protection against discrimination on the basis of race, color, national origin, sex, age, or disability. This intent is derived from Section 1557(b) of the ACA. In addition to the statutory references cited directly in Section 1557(b), the proposed rule includes the Architectural Barriers Act of 1968, 42 U.S.C. 4151–4157 (2012), the Americans with Disabilities Act of 1990, 42 U.S.C. 12101 *et seq.* (codified as amended by the Americans with Disabilities Amendments Act of 2008, Pub. L. 110–325, 122 Stat. 3553 (2008)) (ADA), and Section 508 of the Rehabilitation Act of 1973, 29 U.S.C. 794d (Section 508). These laws establish additional Federal civil rights protections for individuals with disabilities, and covered entities must be mindful that the obligations imposed by those laws apply to them independent of the application of Section 1557.

Definitions (§ 92.4)

Section 92.4 contains proposed definitions. Definitions of particular note are set out below.

Auxiliary aids and services. The definition of ''auxiliary aids and services'' is the same as the definition of this term in the regulations

[2] Section 1557 applies to all health programs and activities, any part of which receives Federal financial assistance from any Federal Department. However, this proposed rule would apply only to health programs and activities any part of which receives Federal financial assistance from HHS. This narrowed application is consistent with HHS' enforcement authority over such health programs and activities, but other Federal agencies are encouraged to adopt the standards set forth in this proposed rule in their own enforcement of Section 1557.

[3] *See* 42 U.S.C. 6103(b).

[4] We are also seeking comment elsewhere in this Preamble on a number of possible exceptions to the proposed rule, including with regard to what sex-based distinctions, if any, should be permitted in the context of health programs and activities and the standards for permitting those distinctions. See Preamble discussion of § 92.101(c).

[5] *See, e.g.,* 42 U.S.C. 300a–7; 42 U.S.C. 238n; Consolidated and Continuing Appropriations Act 2015, Pub. L. 113–235, 507(d) (Dec. 16, 2014).

[6] 42 U.S.C. 2000bb–1.

[7] *See, e.g.,* 42 U.S.C. 18023.

[8] *See* 45 CFR 147.131.

implementing the ADA, at 28 CFR 35.104, 36.303(b).

Covered entity. The term ''covered entity'' means: (1) An entity that operates a health program or activity, any part of which receives Federal financial assistance;[9] (2) an entity established under Title I of the ACA that administers a health program or activity; and (3) the Department.

With regard to the Health Insurance Marketplaces, covered entities include, for example, Navigators that receive Federal financial assistance as defined in this rule. Navigators are entities that carry out the duties identified in the ACA and its implementing regulations, such as informing the public about the health coverage options available through the Health Insurance Marketplaces and facilitating enrollment in health coverage programs.[10] State-based Marketplaces are covered as Title I entities. The Federally-facilitated Marketplaces are covered both as Title I entities and as health programs or activities of the Department.

Director. Director means the Director of the Office for Civil Rights in the Department.

Disability. The definition of ''disability'' is the same as the definition of this term in the Rehabilitation Act, at 29 U.S.C. 705(9)(B), which incorporates the definition of disability in the ADA, as construed by the ADA Amendments Act of 2008 (Pub .L. 110–325; 42 U.S.C. 12102), as amended. This part uses the term ''disability'' in place of the term ''handicap'' used in some previous civil rights statutes and regulations. Throughout this part, where we cross-reference other regulatory provisions, regulatory language that uses the term ''handicap'' shall mean ''disability.'' This change in terminology does not reflect a change in the substance of the definition.

Electronic and information technology. The definition of ''electronic and information technology'' is consistent with 36 CFR 1194.4, the regulation implementing Section 508.

Employee health benefit program. The term ''employee health benefit program'' means (1) health benefits coverage or health insurance provided to employees and/or their dependents established, operated, sponsored or administered by, for, or on behalf of one or more employers, whether provided or administered by entities including but not limited to, a health insurance issuer, group health plan (as defined in the Employee Retirement Income Security Act of 1974 (ERISA, at 29 U.S.C. 1191(a)), a third party administrator, or an employer; (2) an employer-provided or -sponsored wellness program; (3) an employer-provided health clinic; or (4) long term care coverage or insurance provided or administered by an employer, group health plan, third party administrator, or health insurance issuer.

Federal financial assistance. The term ''Federal financial assistance'' includes the standard definition of grants, loans, and other types of assistance in accordance with the definition of ''Federal financial assistance'' in the regulations implementing Section 504 and the Age Act at 45 CFR 84.3(h) and 91.4, respectively, and also specifically includes subsidies and contracts of insurance, in accordance with the statutory language of Section 1557.

However, consistent with OCR's enforcement of other civil rights authorities, the definition of Federal financial assistance does not include Medicare Part B.

An additional clause is added to the proposed regulatory provision, modeled on the definition of ''Federal financial assistance'' in the regulation implementing Title IX at 45 CFR 86.2(g). That Title IX regulatory provision clarifies that Federal financial assistance includes wages, loans, grants, scholarships and other monies that are given to any entity for payment to or on behalf of students who are admitted to that entity or that are given directly to these students for payment to that entity.[11] This provision was included in the Title IX regulation to make clear that both funds paid to the educational entity on behalf of a student, and funds paid to the student and then remitted to the educational entity, are Federal financial assistance. In the health care context, Federal funds are provided to or on behalf of eligible individuals for premium tax credits and advance payments of premium tax credits and cost sharing reductions to ensure the affordability of health insurance coverage purchased through the Health Insurance Marketplaces. To clarify that these funds are Federal financial assistance, we have added language to this proposed definition stating that such funds are Federal financial assistance when extended to the entity providing the health insurance coverage or services, whether they are paid directly by the Federal government to that entity or to the individual for remittance to the entity providing health insurance coverage or services. Thus, an issuer participating in any Health Insurance Marketplace is receiving Federal financial assistance when advance payments of premium tax credits and/or cost sharing reductions are provided to any of the issuer's enrollees. A health services provider that contracts with such an issuer does not become a recipient of Federal financial assistance by virtue of the contract, but would be a recipient if the provider otherwise receives Federal financial assistance.

Federally-facilitated Marketplace. The term Federally-facilitated Marketplace has the same meaning as ''Federally-facilitated Exchange'' defined in 45 CFR 155.20.

Gender identity. The term ''gender identity'' means an individual's internal sense of gender, which may be different from an individual's sex assigned at birth. The way an individual expresses gender identity is frequently called ''gender expression,'' and may or may not conform to social stereotypes associated with a particular gender. Gender may be expressed through, for example, dress, grooming, mannerisms, speech patterns, and social interactions. For purposes of this part, an individual has a transgender identity when the individual's gender identity is different from the sex assigned to that person at birth; an individual with a transgender identity is referred to in this part as a transgender individual. The approach taken in this definition is consistent with the approach taken by the Federal government in similar matters.[12]

Health Insurance Marketplace. The term ''Health Insurance Marketplace''[13] means the same as ''Exchange'' defined in 45 CFR 155.20.

Health program or activity. The term ''health program or activity'' is defined to include the provision or administration of health-related services or health-related insurance coverage and the provision of assistance in obtaining health-related services or health-related insurance coverage. Similar to the

[9] As noted *supra* at n.2, this proposed rule would apply to recipients of Federal financial assistance from HHS only. The term ''covered entity'' is nonetheless defined broadly so that other Federal Departments can readily apply the standards of this rule to their own enforcement of Section 1557.

[10] *See, e.g.,* 42 U.S.C. 18031(i) (authorizing the Navigator program); 45 CFR 155.210 (c), (e) (identifying eligibility requirements for, and responsibilities of, receiving a Navigator grant).

[11] *See* 45 CFR 86.2(g)(1)(ii).

[12] *See, e.g.,* Memorandum from Office of Personnel Management, ''Guidance Regarding the Employment of Transgender Individuals in the Federal Workplace'' (May 27, 2011); Resource Guide from Office of Personnel Management, the Equal Employment Opportunity Commission, the Office of Special Counsel, and the Merit Systems Protection Board, ''Addressing Sexual Orientation and Gender Identity Discrimination in Federal Civilian Employment'' (June 2015).

[13] Health Insurance Marketplaces are also known as ''Marketplaces.''

approach of the Civil Rights Restoration Act[14] and except as specifically set forth otherwise in this part,[15] the term further includes all of the operations of an entity principally engaged in providing or administering health services or health insurance coverage, such as a hospital, health clinic, community health center, group health plan, health insurance issuer, physician's practice, nursing facility, or residential or community-based treatment facility.[16] OCR intends to interpret ''principally engaged'' in a manner consistent with civil rights laws that use this term.

OCR intends the plural ''health programs or activities'' used in this proposed part to have the same meaning as the term ''health program or activity'' in the singular. Similarly, this proposed part's use of ''health programs and activities,'' a variation of ''health program or activity,'' does not reflect a change in the substance of the definition of ''health program or activity.''

Commenters responding to the request in the RFI for examples of programs and activities that should be considered ''health programs or activities'' generally supported a broad interpretation of the term. We propose to interpret ''health programs and activities'' to include programs such as health education and health research programs. However, OCR recognizes that health research is conducted to answer scientific questions and advance health through the advancement of knowledge; it is not designed to result in direct health benefits to participants, though individuals may in fact receive health benefits from participation. In addition, and consistent with basic nondiscrimination principles applied in other contexts, OCR notes that individuals have a right to nondiscriminatory consideration for inclusion in a research project but are not entitled to be selected to participate.

Because Federal civil rights laws already prohibit discrimination on the basis of race, color, national origin, disability, or age in all health research programs and activities that receive Federal financial assistance and prohibit discrimination on the basis of sex in all health research programs conducted by colleges and universities, application of Section 1557 to health research should impose limited additional burden on covered entities. But including health research under Section 1557 would extend the prohibition against discrimination on the basis of sex to Federally assisted health research programs and activities in non-educational institutions, complementing existing initiatives to increase diversity and inclusion in health research. Moreover, applying the requirements of Section 1557 to Department-conducted health programs and activities, including health research, would hold HHS components to the same standards as recipients of Federal financial assistance, prohibiting discrimination on all bases covered by Section 1557.

OCR also recognizes that research projects are often limited in scope for many reasons, such as the principal investigator's scientific interest, funding limitations, recruitment requirements, and other nondiscriminatory considerations. Thus, criteria in research protocols that target or exclude certain populations are warranted where nondiscriminatory justifications establish that such criteria are appropriate with respect to the health or safety of the subjects, the scientific study design, or the purpose of the research. OCR does not intend for inclusion of health research within the definition of health program or activity to alter the fundamental manner in which research projects are designed, conducted, or funded; nor is OCR proposing to systematically review health research protocols. For example, a medical research institution that is a covered entity may exclude individuals who are a deaf from a clinical trial to investigate a new brain imaging technology for assessing cognitive functioning that relies on auditory stimulation as the test stimulus. This research design would not be discriminatory on the basis of disability because there is a nondiscriminatory justification for excluding individuals who are deaf.

OCR continues to seek comment on programs and activities that should be considered health programs or activities.

Individual with a disability. The proposed definition of ''individual with a disability'' is the same as the definition of this term used for the purpose of Section 504 of the Rehabilitation Act, found at 29 U.S.C. 705(20)(B)–(F), as amended. The Rehabilitation Act, at 29 U.S.C. 705(20)(B)–(F), incorporates the definition of ''individual with a disability'' from the ADA. This part uses the person-first term ''individual with a disability'' in place of the outdated terms ''handicapped person'' and ''individual with handicaps'' which are found in earlier civil rights laws and regulations. Throughout this part, where we cross-reference Section 504, regulatory language that uses ''handicapped person'' and ''individual with handicaps'' shall mean ''individual with a disability.'' This change in terminology does not reflect a change in the substance of the definition.

Individual with limited English proficiency. The term ''individual with limited English proficiency'' codifies the Department's long-standing definition reflected in guidance interpreting Title VI's prohibition of national origin discrimination, entitled Guidance to Federal Financial Assistance Recipients Regarding Title VI Prohibition Against National Origin Discrimination Affecting Limited English Proficient Persons[17] (HHS LEP Guidance). Under this definition, an individual whose primary language for communication is not English is an individual with limited English proficiency under this part as long as the individual has a limited ability to communicate in one of the following ways: Reading, speaking, writing, or understanding. Consequently, an individual whose primary language for communication is not English and who has some ability to speak English is an individual with limited English proficiency under this part if the individual has a limited ability to read, write, or understand English.

Language assistance services. The term ''language assistance services'' identifies types of well-established methods or services used to communicate with individuals with limited English proficiency, including oral language assistance, written translation, and taglines. A covered entity has flexibility to provide language assistance services in-house or through commercially available options. To maximize covered entities' flexibilities

[14] 102 Stat. 28, Pub. Law 100–259 (1988).

[15] Employee health benefits programs are discussed elsewhere in this proposed rule. *See infra* discussion of proposed § 92.208.

[16] A health program or activity also includes all of the operations of a State Medicaid program. Where a State Medicaid program resides in an agency that is principally engaged in providing health services or health insurance coverage, or is primarily engaged in providing assistance in obtaining health services or health coverage, all of the operations of the agency will be a health program or activity. Where a State Medicaid program is operated by a State agency that operates many other programs that provide services other than health-related services, health related insurance coverage, or assistance in obtaining health-related services or health-related coverage, the agency as a whole may not be principally engaged in providing health services, health insurance coverage, or assistance in obtaining health services or health coverage; in such cases, only the agency's Medicaid program and other health-related programs will meet the definition of health program and activity. The same is true for local Medicaid agencies.

[17] Guidance to Federal Financial Assistance Recipients Regarding Title VI Prohibition Against National Origin Discrimination Affecting Limited English Proficient Persons, 68 FR 47311, 47313 (Aug. 8, 2003) (hereinafter HHS LEP Guidance).

and to account for the likelihood of future innovations, we decline to offer an exhaustive list of available methods. However, given the range of methods available specifically for oral language assistance, proposed paragraph (1) identifies the following as available methods to communicate orally with individuals with limited English proficiency: Oral interpretation (in-person or remotely) [18] and direct communication through the use of bilingual and multilingual staff competent to communicate directly, in non-English languages using any necessary specialized vocabulary, with individuals with limited English proficiency.

On the basis of sex. The term ''on the basis of sex'' is defined to include, but is not limited to, discrimination on the basis of pregnancy, false pregnancy, termination of pregnancy, or recovery therefrom, childbirth or related medical conditions, sex stereotyping, or gender identity.

Section 1557 extends the grounds for discrimination found in nondiscrimination laws (*i.e.,* race, color, national origin, sex, age, or disability) to certain health programs and activities. The HHS Title IX regulation explicitly includes discrimination on the basis of pregnancy as a form of discrimination on the basis of sex, and the definition in this section mirrors that regulation. *See* 45 CFR 86.40(b) (prohibiting discrimination on the basis of ''pregnancy, childbirth, false pregnancy, termination of pregnancy or recovery therefrom'').

The proposed inclusion of sex stereotyping reflects the Supreme Court's holding in *Price Waterhouse* v. *Hopkins,* 490 U.S. 228, 250–51 (1989), that discrimination based on stereotypical notions of appropriate behavior, appearance or mannerisms for each gender constitutes sex discrimination.

We propose that discrimination on the basis of sex further includes discrimination on the basis of gender identity. OCR has previously interpreted sex discrimination to include discrimination on the basis of gender identity.[19] Other Federal agencies have similarly interpreted the meaning of sex discrimination.[20] In addition, courts, including in the context of Section 1557, have recognized that sex discrimination includes discrimination based on gender identity.[21] We thus propose to formally adopt this well-accepted interpretation of discrimination ''on the basis of sex.''

As a matter of policy, we support banning discrimination in health programs and activities not only on the bases identified previously, but also on the basis of sexual orientation. Current law is mixed on whether existing Federal nondiscrimination laws prohibit discrimination on the basis of sexual orientation as a part of their prohibitions of sex discrimination. To date, no Federal appellate court has concluded that Title IX's prohibition of discrimination ''on the basis of sex''—or Federal laws prohibiting sex discrimination more generally—prohibits sexual orientation discrimination, and some appellate courts previously reached the opposite conclusion.[22]

However, a recent EEOC decision concluded that Title VII's prohibition of discrimination ''on the basis of sex'' precludes sexual orientation discrimination because discrimination on the basis of sexual orientation necessarily involves sex-based considerations. The EEOC relied on several theories to reach this conclusion: A plain interpretation of the term ''sex'' in the statutory language, an associational theory of discrimination based on ''sex,'' and the gender-stereotype theory announced in *Price Waterhouse.*[23] The EEOC's decision cited several district court decisions that similarly concluded that sex discrimination included sexual orientation discrimination, using these theories.[24] The EEOC also analyzed and called into question the appellate decisions that have concluded that sexual orientation discrimination is not covered under Title VII. The EEOC decision applies to workplace conditions, as well as hiring, firing, and promotion decisions, and is one of several recent developments in the law that have resulted in additional protections for lesbian and gay individuals against discrimination.[25]

[18] We use the terms ''oral interpretation'' and ''written translation'' for clarity but we note that the term ''interpretation'' used without the preceding descriptor of ''oral'' refers to the communication of information orally and the term ''translation'' used without the preceding descriptor of ''written'' refers to the communication of information in writing. *See, e.g.,* U.S Dep't of Justice, Commonly Asked Questions and Answers Regarding Limited English Proficient (LEP) Individuals and Translators, *available at http://www.lep.gov/faqs/042511_Q&A_EO_13166.pdf* (differentiating between interpreters and translators in FAQ 11); Interpreters and Translators, U.S. Department of Labor, Bureau of Labor Statistics, Occupational Outlook Handbook, 2014–15, *available at http://www.bls.gov/ooh/media-and-communication/interpreters-and-translators.htm* (explaining that interpreters convert information in a spoken language and translators convert information in written language).

[19] *See* Letter from Leon Rodriguez, Director, U.S. Department of Health & Human Services, Office for Civil Rights, to Maya Rupert, Federal Policy Director, National Center for Lesbian Rights (Jul. 12, 2012).

[20] *See* regulations issued by the Office of Personnel Management, clarifying that the discrimination on the basis of sex includes discrimination on the basis of gender identity, *79 FR 43919 (Jul. 29, 2014);* Directive 2014–02, U.S. Department Of Labor, Office of Federal Contract Compliance Programs (Aug. 19, 2014), *available at http://www.dol.gov/ofccp/regs/compliance/directives/dir2014_02.html*; Statement of Interest of the United States, *Jamal* v. *SAKS & Co.,* No. 4:14–CV–2782 (S.D. Tex. 2015); Statement of Interest of the United States, *Tooley* v. *Van Buren Public Schools,* No. 2:14–cv–13466–AC–DRG (E.D. Mich.) (Feb. 24, 2015), Mediated Settlement Order, *United States* v. *Toone,* No. 6:13–CV–744 (E.D. Tex. 2014); Memo from Eric Holder, Att'y Gen., to U.S. Att'ys & Heads of Dep't Components (Dec. 15, 2014); U.S. Dep't of Educ., Questions and Answers on Title IX and Sexual Violence at B–2 (*http://www2.ed.gov/about/offices/list/ocr/docs/qa-201404-title-ix.pdf*) Resolution Agreement Between Arcadia Unified Sch. Dist., U.S. Dep't of Educ., Office for Civil Rights, & the U.S. Dep't of Justice, Civil Rights Div., OCR Case No. 09–12–1020, DOJ Case No. 169–12C–70, at 1 (Jul. 24, 2013); *Macy* v. *Holder,* EEOC Appeal No. 0120120821, Agency No. ATF–2011–00751 (Apr. 20, 2012) 2012 WL 1435995, at *11.

[21] *See, e.g., Rumble* v. *Fairview Heath Services,* 2015 WL 1197415 (D. Minn. 2015) (order denying motion to dismiss); *Barnes* v. *City of Cincinnati,* 401 F.3d 729 (6th Cir.), *cert. denied,* 546 U.S. 1003 (2005); *Smith* v. *City of Salem, Ohio,* 378 F.3d 566 (6th Cir. 2004); *Schroer* v. *Billington,* 577 F. Supp.2d 293 (D.D.C. 2008). *But see Johnston* v. *University of Pittsburgh,* Civ. Action No. 3:13–213 (W.D.Pa. Mar. 31, 2015) (interpreting Title IX, among other authorities).

[22] *See, e.g,, Kiley* v. *Am. Soc'y for Prevention of Cruelty to Animals,* 296 Fed. App'x 107, 109 (2d Cir. 2008); *Vickers* v. *Fairfield Med. Ctr.,* 453 F.3d 757, 759 (6th Cir. 2006); *Bibby* v. *Philadelphia Coca Cola Bottling Co.,* 260 F.3d 257, 260 (3d Cir. 2001); *but cf. Latta* v. *Otter,* 771 F.3d 456 (9th Cir. 2014) (Berzon, J., concurring) (in striking down State law prohibition on same sex marriage, observing that ''the same sex marriage laws treat the subgroup of men who wish to marry men less favorably than the otherwise similarly situated subgroup of women who want to marry men'' and therefore constitute sex discrimination); see also *Muhammad* v. *Caterpillar,* 767 F.3d 694 (7th Cir. 2014), 2014 WL 4418649 (7th Cir. Sept. 9, 2014, as Amended on Denial of Rehearing, Oct. 16, 2014) (removing statements from previously issued panel decision that relied on outdated precedents about coverage of sexual orientation discrimination under Title VII as requested in EEOC Amicus Brief).

[23] *Baldwin* v. *Foxx,* EEOC Appeal No. 0120133080, Agency No. 2012–24738–FAA–03, at 5–6 (July 15, 2015) (finding that sexual orientation is inseparable from and inescapably linked to sex and thus that an allegation of discrimination based on sexual orientation is necessarily an allegation of sex discrimination).

[24] *See e.g. Centola* v. *Potter,* 183 F. Supp. 2d 403, 410 (D. Mass. 2002); *Heller* v. *Columbia Edgewater Country Club,* 195 F. Supp. 2d at 1212 (D. Or. 2002); *Koren* v. *Ohio Bell,* 894 F. Supp. 2d 1032, 1038 (N.D. Ohio 2012); *Terveer* v. *Billington,* 34 F. Supp. 3d 100, 116, 2014 WL 1280301 (D.D.C. 2014); *Boutillier* v. *Hartford Public Schools,* 2014 WL 4794527 (D. Conn. 2014); *Deneffe* v. *SkyWest, Inc.,* 2015 WL 2265373, at *6 (D. Colo. May 11, 2015).

[25] For example, in 1996, the Supreme Court struck down an amendment to the Colorado constitution that prohibited the State government from providing any legal protections to gay, lesbian, and bisexual individuals. Seven years later, in 2003, the Supreme Court invalidated a Texas law that criminalized same-sex sodomy. And just this year,

The final rule should reflect the current state of nondiscrimination law, including with respect to prohibited bases of discrimination. We seek comment on the best way of ensuring that this rule includes the most robust set of protections supported by the courts on an ongoing basis.

Qualified individual with a disability. The definition of ''qualified individual with a disability'' is the same as language in the ADA and the regulation implementing Title II of the ADA, at 42 U.S.C. 12131(2) and 28 CFR 35.104, respectively, except that the definition has been modified to apply in the context of a health program or activity.

Qualified interpreter. The term ''qualified interpreter'' means an individual who has the characteristics and skills necessary to interpret for an individual with a disability, for an individual with limited English proficiency, or for both. The language in paragraph (1) applicable for interpreting for an individual with a disability is the same as language in the regulations implementing the ADA, at 28 CFR 35.104, 36.104. The language in paragraph (2) applicable for interpreting for an individual with limited English proficiency reflects a synthesis of the attributes, described in the Department's LEP Guidance, that are necessary for an individual to interpret competently and effectively under the circumstances and thus to provide the effective oral language assistance services required under the law.[26] The fact that an individual has above average familiarity with speaking or understanding a language other than English does not suffice to make that individual a qualified interpreter for an individual with limited English proficiency.

The definition of ''qualified interpreter'' includes criteria regarding interpreter ethics, including client confidentiality. Because the definition of a qualified interpreter includes adherence to generally accepted interpreter ethics principles, bilingual or multilingual staff who are competent to communicate directly with individuals with limited English proficiency nonetheless may not satisfy a requirement to adhere to such principles. For instance, a bilingual nurse who is competent to communicate in Spanish directly with Spanish-speaking individuals with limited English proficiency may not be a ''qualified interpreter'' if serving as an interpreter would pose a conflict of interest with the nurse's treatment of the patient.

Recipient. The term ''recipient'' is the same as language in the regulation implementing Title IX at 45 CFR 86.2(h), except that it has been modified to apply in the context of a health program or activity.[27]

Sex stereotypes. The term ''sex stereotypes'' refers to stereotypical notions of masculinity or femininity, including expectations of how individuals represent or communicate their gender to others, such as behavior, clothing, hairstyles, activities, voice, mannerisms, or body characteristics. These stereotypes can include expectations that gender can only be constructed within two distinct opposite and disconnected forms (masculinity and femininity), and that gender cannot be constructed outside of this gender construct (individuals who identify as neither, both, or a combination of male and female). This definition is consistent with the approach taken by the Federal government in similar matters.[28]

State-based Marketplace. The term ''State-based Marketplace'' means an Exchange operated by a State with the approval of the Department pursuant to 45 CFR 155.105.

Taglines. Taglines are short statements written in non-English languages to alert individuals with limited English proficiency to the availability of language assistance services free of charge.[29] For instance, a tagline in Tagalog appearing on an English language document serves to notify Tagalog-speaking individuals with limited English proficiency that language assistance services, such as oral interpretation services through a qualified interpreter, are available and how they can be obtained.

Title I Entity. Title I of the ACA established Health Insurance Marketplaces, including the State-based Marketplaces and Federally-facilitated Marketplaces. The Federally-facilitated Marketplaces are also a health program or activity operated by the Department.

Assurances Required (§ 92.5)

Section 92.5 proposes that each entity applying for Federal financial assistance, each issuer seeking certification to participate in a Health Insurance Marketplace, and each State seeking approval to operate a State-based Marketplace be required to submit an assurance that its health programs and activities will be operated in compliance with Section 1557 and this part. The regulations implementing Title VI, Title IX, Section 504, and the Age Act all require similar assurances. We modeled the assurance, duration of obligation, and covenants language on the Section 504 regulation, at 45 CFR 84.5. To reduce burden on covered entities, OCR is revising the Assurance of Compliance HHS–690 Form to include all civil rights laws, including Section 1557, with which covered entities must comply.

Remedial Action and Voluntary Action (§ 92.6)

Section 92.6 proposes provisions addressing remedial action and voluntary action by covered entities. Paragraph (a) proposes that a recipient or State-based Marketplace that has been found to have discriminated on any of the bases prohibited by Section 1557 be required to take remedial action as required by the Director to overcome the effects of that discrimination. The Department, including the Federally-facilitated Marketplaces, like recipients and State-based Marketplaces, is also obligated to address discrimination, but is subject to a different remedial process than recipients and State-based Marketplaces. *See* proposed § 92.303.

Proposed paragraph (b) permits, but does not require, all covered entities to take voluntary action in the absence of a finding of discrimination to overcome the effects of conditions that result or

the Supreme Court ruled that States may not prohibit same-sex couples from marrying and must recognize the validity of same-sex couples' marriages.

[26] *See* HHS LEP Guidance, *supra* n. 17, 68 FR at 47316 (explaining that an individual's proficiency in another language, knowledge of specialized terminology, and adherence to interpreter ethics are considerations in determining competency to interpret); *id.* at 47317–18 and 47323 (discussing why family members, friends, and ad hoc interpreters may not be competent to interpret); *see also, e.g.,* Voluntary Resolution Agreement between U.S. Dep't of Health & Human Servs., Office for Civil Rights and Mee Memorial Hosp., OCR Transaction Nos. 12–143846, 13–1551016, & 13–153378, pt. II.J. (2014), *available at http://www.hhs.gov/ocr/civilrights/activities/agreements/mee.html* (defining qualified interpreter); Voluntary Resolution Agreement between U.S. Dep't of Health & Human Servs., Office for Civil Rights and Montgomery County Dep't of Soc. Servs., OCR Transaction No. 08–79992, pts. II.E (defining qualifications of an ''interpreter'' under the agreement), IV.H (requiring timely, competent language assistance); & IV.L (identifying interpreter standards), *available at http://www.hhs.gov/ocr/civilrights/activities/examples/LEP/mcdssra.html.*

[27] *See supra* n. 2.

[28] *See* Brief of the U.S. Equal Employment Opportunity Commission as Amicus Curiae in Support of Rehearing, *Muhammad* v. *Caterpillar Inc.,* No. 12–1723 at 4 (7th Cir. filed Oct. 9, 2014).

[29] The HHS LEP Guidance, *supra* n. 17, describes the practice of tagging non-English statements in ''brochures, booklets, and in outreach and recruitment information'' informing individuals with limited English proficiency of the availability of language assistance services. *See id.* at 47,320 (explaining how statements in non-English languages ''could be 'tagged' onto the front of common documents.'').

resulted in limited participation by persons based on race, color, national origin, sex, age, or disability. The provisions at § 92.6(a) and (b) are modeled after the Title VI, Title IX, Section 504, and Age Act regulations.

Designation of Responsible Employee and Adoption of Grievance Procedures (§ 92.7)

Proposed § 92.7 outlines the requirement for covered entities that employ 15 or more persons to designate a responsible employee and adopt grievance procedures. The implementing regulations for Section 504 and Title IX contain such requirements. Moreover, through its case investigative experience, OCR has observed that the presence of a coordinator and a grievance procedure help to bring concerns to prompt resolution within the entity, leading to lower compliance costs and more efficient outcomes. We thus propose in this provision to apply these requirements to all bases of prohibited discrimination.

Paragraph (a) proposes that covered entities that employ 15 or more persons designate at least one employee to coordinate compliance with the requirements of the rule. A covered entity that has already designated a responsible employee pursuant to the regulations implementing Section 504 or Title IX may use that individual to coordinate its efforts to comply with Section 1557 or this part, provided that the scope of the individual's responsibilities is modified to include all prohibited bases of discrimination included in Section 1557 and other duties as required by Section 1557 or this part. For the Department, including Federally-facilitated Marketplaces, OCR will be deemed the responsible employee.

Paragraph (b) proposes that covered entities that employ 15 or more persons be required to adopt grievance procedures and appropriate due process standards that would allow for the prompt and equitable resolution of complaints concerning actions prohibited by Section 1557 and this part. Covered entities that already have a grievance procedure in place pursuant to the regulation implementing Section 504 may use that procedure to address claims under Section 1557 or this part, provided that the existing procedure meets the standards established under the Section 504 regulation. In addition, covered entities may use that procedure to address all other Section 1557 claims, provided that that procedure meets the standards under the Section 504 regulation and that the procedure is modified to apply to race, color, national origin, sex, and age discrimination claims. For the Department, including Federally-facilitated Marketplaces, the procedures for addressing complaints of discrimination on the grounds covered under Section 1557 will be deemed grievance procedures.

OCR is considering requiring that all covered entities, not just those that employ 15 or more persons, designate a responsible employee and establish grievance procedures. While Section 504 limits these requirements to recipients with 15 or more employees, Title IX applies them to all recipients that operate educational programs or activities, regardless of the size of the recipient. Following the approach of Title IX would lead to a broader application under Section 1557 that would benefit more individuals by reaching more covered entities and allowing covered entities to address any potential compliance issues at an earlier stage and in a less formal manner than an OCR investigation. We invite comment on this proposal, including any associated costs and benefits.

Notice Requirement (§ 92.8)

Section 92.8 proposes that each covered entity take initial and continuing steps to notify beneficiaries, enrollees, applicants, or members of the public of certain important information. We modeled this section generally after the notice requirements found in regulations implementing Title VI, Title IX, Section 504, and the Age Act, which require covered entities to have a notice in place.

Paragraphs (a)(1)–(7) of § 92.8 propose the components of the notice that each covered entity is required by § 92.8(b) and (f) to post.

Paragraph (a)(1) proposes that the notice include that the covered entity does not discriminate on the basis of race, color, national origin, sex, age, or disability.

Paragraphs (a)(2) and (a)(3) propose that the notice include a statement that the covered entity provides auxiliary aids and services, free of charge, in a timely manner, to individuals with disabilities, when such aids and services are necessary to provide an individual with a disability an equal opportunity to benefit from the entity's health programs or activities; and language assistance services, free of charge, in a timely manner, to individuals with limited English proficiency, when those services are necessary to provide an individual with limited English proficiency meaningful access to a covered entity's health programs or activities. These provisions are necessary to ensure that individuals are aware of their rights under the law, and are grounded in OCR's experience that failures of communication based on the absence of auxiliary aids and services and language assistance services raise particularly significant compliance concerns. In addition, such failures of communication often are a primary contributor to limitations in access to health programs and activities for individuals with disabilities and individuals with limited English proficiency. Apprising individuals of the availability of communication assistance under Section 1557 will promote both compliance with the law and better health outcomes.

Paragraph (a)(4) proposes that the notice include information on how an individual can access the aids and services referenced in (a)(2) and (a)(3).

Paragraph (a)(5) proposes that the notice provide contact information for the responsible employee, where such a responsible employee is required by § 92.7(a).

Paragraph (a)(6) proposes that the notice include the availability of the grievance procedure, where such a grievance procedure is required by § 92.7(b), and information on how to file a grievance.

Paragraph (a)(7) proposes that the notice provide information on how to file a complaint with OCR. Inclusion of this requirement ensures that covered entities inform individuals about the enforcement mechanisms outside of the covered entity's internal process.

Paragraph (b) provides that within 90 days of the effective date of this part, each covered entity shall post the notice, consistent with paragraph (f) of this section, that conveys the information in English in paragraph (a)(1) through (7) of this section.

Paragraph (c) provides that the Director shall make available an electronic sample notice in English that contains the content listed in, and meets the requirements of, paragraphs (a)(1) through (7). Covered entities may use this sample notice or may develop their own notices that meet the requirements of paragraphs (a)(1) through (7). We request comment on the sample notice included in Appendix A to this proposed rule.

OCR also invites comment on whether this proposed rule should permit covered entities to combine the content of the notice required under the proposed rule with the content of other notices that covered entities may be required to disseminate or post under Federal laws and, if so, what steps covered entities may or should take to

ensure that the content of the notice required by the proposed rule is sufficiently conspicuous and visible to beneficiaries, enrollees, applicants, or members of the public that they are able to become aware of the content of the notice. In addition, OCR invites comment on whether this proposed rule should allow the notice to be modified to be appropriate for publications and other communication vehicles that may not have sufficient space to accommodate the full notice, *e.g.,* postcards, trifold brochures, and social media platforms and, if so, what information such a modified notice should include.

Paragraph (c) also proposes that the Director shall translate the sample notice into the top 15 languages [30] spoken by individuals with limited English proficiency nationally and make the translated notices available to covered entities electronically and in any other manner the Director determines appropriate. Assigning to OCR the responsibility to translate the sample notice maximizes efficiency and economies of scale. This approach means covered entities will receive the benefits of having multi-language notices available without incurring the associated translation costs. We expect that making the sample notice available in non-English languages will substantially increase the value and utility of the notice required in paragraphs (a) and (b) of § 92.8.

Under our proposed approach, covered entities are encouraged, but not required, to post one or more of the translated notices, particularly in the most prevalent languages spoken by individuals with limited English proficiency in the covered entities' geographic service areas, as determined by the covered entities. Covered entities also may make the notice available in non-English languages other than the top 15 languages for which translated notices are provided by the Director. We encourage covered entities to make the content of the notice available in additional non-English languages to inform national origin groups within covered entities' geographic service areas of their rights under Section 1557 and this proposed rule.

In lieu of this approach, OCR considered requiring, rather than merely encouraging, covered entities to post one or more of the notices in the most prevalent non-English languages frequently encountered by covered entities in their geographic service areas, such as Spanish. This option would leverage the OCR-translated notices and improve, for certain national origin populations, access to the information in the notice in a language that those individuals with limited English proficiency could understand. The main disadvantage of this option is the burden of using physical wall space to post notices and using information technology staff/resources for web posting of notices and printing of notices. For the purposes of this proposed rule, we believe the availability of the taglines that § 92.8(d) of this proposed rule requires covered entities to post strikes an appropriate balance. We seek comment on the alternate approach.

With regard to the proposal that the Director provide translations of the sample notice, we selected the top 15 languages spoken by individuals with limited English proficiency nationally as a data driven policy. This scope reaches nearly 90 percent of individuals with limited English proficiency in the United States based on the U.S. Census Bureau's 2011 to 2013 data—the most recent three-year data available—that estimates the prevalence of foreign-language speakers who speak English less than ''very well.'' We will review U.S. Census Bureau data more recent than 2011 to 2013, as the data becomes available, to determine if and when the top 15 languages spoken nationally by individuals with limited English proficiency change, warranting the Director to make available notices translated in additional non-English languages.

Paragraph (d) proposes that within 90 days of the effective date of this part, each covered entity shall post, consistent with paragraph (f) of this section, taglines in the top 15 languages spoken nationally by individuals with limited English proficiency.

Paragraph (e) proposes that the Director shall make available taglines in the top 15 languages spoken nationally by individuals with limited English proficiency for use by covered entities. Taglines have a high utility as a gateway to language assistance services: They are written in non-English languages that individuals with limited English proficiency can understand, inform those individuals how to access language assistance services, and encourage those individuals to identify themselves and the languages in which they communicate.[31] The Department's LEP Guidance describes the practice of tagging non-English statements in publications and informational materials.[32]

We request comment on the content of the sample tagline included in Appendix B to this proposed rule. As with our approach to making available translated notices, assigning to OCR the responsibility to provide translated taglines maximizes efficiency and economies of scale. This approach means that covered entities will receive the benefits of having multi-language taglines available without incurring the associated translation costs. For this reason, we anticipate covered entities will use the translated taglines that the Director makes available. Covered entities are not limited to posting taglines in the 15 languages made available by the Director; covered entities may provide taglines in as many other non-English languages as appropriate to alert national origin groups in the covered entity's geographic service area of language assistance services that may be available.

Paragraph (f) of this section prescribes the location for posting both notices and taglines. Specifically, the proposed rule requires that covered entities post the English-language notice required by § 92.8(a) and (b) and the taglines required by § 92.8(d) in a conspicuously-visible font size in: Significant publications or significant communications targeted to beneficiaries, enrollees, applicants, or members of the public, which may include patient handbooks, outreach publications, or written notices pertaining to rights or benefits or requiring a response from an individual; in conspicuous physical locations; and in a conspicuous location on the home page of a covered entity's Web site. Section 92.8(f) specifically states that a

[30] *See* U.S. Dep't of Commerce, U.S. Census Bureau, American FactFinder, Language Spoken at Home by Ability to Speak English for the Population 5 Years and Older, 3-Year American Community Survey (ACS), Estimates (2011–2013), *http://factfinder.census.gov/faces/tableservices/jsf/pages/productview.xhtml?pid=ACS_13_3YR_B16001&prodType=table* (last visited Mar. 27, 2015). The most recent ACS data available are the 2013 estimates. OCR chose the three-year data set (as opposed to the one-year or five-year data) because it best balances the currency and stability of the data. The top 15 languages in which OCR plans to translate the notice excludes bundled language groups, such as ''other Indo-European languages'' and ''other Pacific Islander languages.'' The top 15 foreign languages, ordered from high to low estimates of number of individuals speaking English less than ''very well,'' are Spanish (or Spanish Creole), Chinese, Vietnamese, Korean, Tagalog, Russian, Arabic, French Creole, French (including Patois and Cajun), Portuguese (or Portuguese Creole), Polish, Japanese, Italian, German, and Persian (Farsi).

[31] *See, e.g.,* HHS LEP Guidance, *supra n. 17* at 68 FR at 47320 (discussing ways to identify the primary languages in which individuals with limited English proficiency communicate and considerations for notifying individuals with limited English proficiency of language assistance services).

[32] *See* HHS LEP Guidance, *id* at 68 FR at 47320.

covered entity may post the notice and taglines in additional publications and communications beyond those listed in paragraphs (f)(1) through (3) of § 92.8. We seek comments on additional ways to define the scope of the significant publications and significant communications.

We propose to require the notice and taglines on a covered entity's Web site to be located conspicuously on the home page so that individuals, generally, are aware of their rights, and individuals with limited English proficiency do not have to navigate English-only text to find information in the individual's language. Covered entities may satisfy the requirement to post the notice on the covered entity's Web site by including a link in a conspicuous location on the covered entity's home page that immediately directs the individual to the content of the notice on the covered entity's Web site. Covered entities may satisfy the requirement to post taglines on the covered entity's Web site by including web links conspicuously on the home page that identify each of the 15 non-English languages, written ''in language,'' and that direct the individual to the full text of the tagline indicating how the individual may obtain language assistance services. For instance, a tagline web link directing a Spanish-speaking individual with LEP to a Spanish-language tagline should appear as ''Español'' rather than ''Spanish.'' Similarly, a tagline directing an individual to a Web site with the full text of a tagline written in Haitian Creole should appear as ''Kreyòl Ayisien'' rather than ''Haitian Creole.'' Providing tagline web links and the text of taglines in their respective non-English languages is of particular importance for languages that do not use a Latin script.

Covered entities that distribute general or major publications targeted to beneficiaries, enrollees, applicants, or members of the public will need to update these publications to include the new notice. However, we propose allowing entities to exhaust their current stock of hard copy publications, rather than requiring a special printing of the publications to include the new notice. When covered entities restock their printed materials, they will be expected to include in those printed materials the notice that we are promulgating with the final rule.

Because the top 15 languages spoken by individuals with limited English proficiency nationally may be over-inclusive or under-inclusive of the languages spoken by individuals with limited English proficiency within the areas served by covered entities' health programs and activities, OCR considered a State-based methodology for identifying the languages in which covered entities would be required to post taglines. For instance, we considered proposing a requirement for entities to make available taglines in the top 15 languages spoken statewide, rather than nationwide, by individuals with limited English proficiency. Identifying a State-based threshold aligns with Federal regulations governing the Health Insurance Marketplaces and qualified health plan [33] issuers.[34] Under this approach, OCR would make available to covered entities translated taglines for the non-English languages constituting the top 15 languages spoken statewide by individuals with limited English proficiency. We seek comment on this alternate methodology, specifically regarding the geographic areas or service areas that should apply for determining a threshold number of languages in which the Director should translate and make available, or for which covered entities should post, taglines.

To reduce the burden on covered entities, proposed subsection (g) of this section states that a covered entity's compliance with § 92.8 satisfies the notice requirements under HHS' Title VI, Section 504, Title IX, and Age Act regulations. We request comment on OCR's proposal to treat compliance with § 92.8 as satisfying the notice requirements under the regulations implementing Title VI, Section 504, Title IX, and the Age Act.

Subpart B—Nondiscrimination Provisions

Subpart B of the proposed rule incorporates regulatory provisions implementing the civil rights statutes referenced in Section 1557(a): Title VI, Title IX, the Age Act, and Section 504.

Discrimination Prohibited (§ 92.101)

Proposed § 92.101 of subpart B prohibits discrimination on the basis of race, color, national origin, sex, age, or disability under any health program or activity to which Section 1557 or this part applies. Paragraphs (a) and (b) of § 92.101 follow the structure of the implementing regulations for Title VI, Section 504, Title IX, and the Age Act by including a general nondiscrimination provision in paragraph (a) followed by a provision identifying specific discrimination prohibited in paragraph (b). Exceptions to discrimination prohibited under the Title VI, Section 504, and Age Act regulations are addressed in paragraph (c). Paragraph (d) effectuates technical changes in terminology to apply the provisions incorporated from other regulations to the covered entities obligated to comply with this proposed rule.

General Discriminatory Actions Prohibited § 92.101(a)

In paragraph (a)(1) of § 92.101, we restate the core objective of Section 1557(a), which prohibits discrimination on the grounds prohibited under Title VI (race, color, or national origin), Title IX (sex), the Age Act (age), or Section 504 (disability) in any health program or activity to which this part applies.

In paragraph (a)(2), we propose to limit the ways in which the proposed rule applies to employment. Except as provided in § 92.208, which addresses employee health benefit programs, this proposed rule does not apply to discrimination by a covered entity against its own employees. Thus, this proposed rule would not extend to hiring, firing, promotions, or terms and conditions of employment outside of those identified in § 92.208; such claims would continue to be brought under other laws, including Title VII of the Civil Rights Act of 1964,[35] Title IX, Section 504, the ADA and the Age Discrimination in Employment Act,[36] as appropriate. We believe that this approach is consistent with the purpose of the ACA and with Section 1557's focus on discrimination in health programs and activities.[37] We invite

[33] Qualified health plan means the same as ''Qualified health plan'' defined in 45 CFR 155.20.

[34] *See* 45 CFR 155.205(c)(2)(iii)(A) through (C).

[35] 42 U.S.C. 2000e *et seq.*

[36] 29 U.S.C. 621 *et seq.*

[37] This approach is consistent with the coverage of the Age Act and Title VI, which explicitly exclude discrimination in employment, subject, in the case of Title VI, to certain exceptions not applicable here. *See* 45 CFR 91.3(b)(2) (excluding employment from application of the regulation implementing the Age Act); 80.2(d) (excluding employment from application of the regulation implementing Title VI); 80.3(c), (d)(3) (exceptions to the exclusion of employment discrimination under the regulation implementing Title VI). Moreover, while Section 504 and Title IX, which are silent on the question, have been interpreted to bar discrimination in employment, those interpretations were based on analyses of the purposes underlying the Rehabilitation Act and on extensive discussion of employment in the legislative history of Title IX. *Consolidated Rail Corp.* v. *Darrone,* 465 U.S. 624, 626 (1984) (promoting and expanding employment opportunities for handicapped individuals is a stated purpose of the Rehabilitation Act, 29 U.S.C. 701(8), and legislative history demonstrates that Congressional intent to bar employment discrimination was a focus of the Act); *North Haven Bd. of Ed. V. Bell,* 456 U.S. 512, 522–530 (1982) (statutory language favors inclusion of employment discrimination and legislative history corroborates Congressional intent to prohibit sex discrimination in employment in Title IX). Our approach in the

comment on our proposal to exclude these forms of employment discrimination from the scope of this proposed rule.

Specific Discriminatory Actions Prohibited § 92.101(b)

Proposed paragraph (b) incorporates into this proposed regulation the specific discriminatory actions prohibited by each civil rights statute which Section 1557 references. We considered harmonizing each of the specific discriminatory actions prohibited across each civil rights law addressed by Section 1557. Although harmonization could reduce redundancy in the specific discriminatory actions incorporated that are similar to one another, harmonization would likely lead to confusion and unintended differences in interpretation that are subtle yet significant. For example, with respect to the separate or different treatment prohibited under the Title VI regulation, such as at 45 CFR 80.3(b)(1)(iii) and (vi), the Section 504 regulation at 45 CFR 84.4(b)(1)(iv), 85.21(b)(1)(iv) requires separate or different treatment in some instances where it is necessary to provide persons with disabilities with aids, benefits or services that are as effective as those provided to others. To avoid confusion and unintended differences in interpretation, therefore, paragraphs (b)(1)–(4) incorporate into this proposed regulation the specific discriminatory actions prohibited under each civil rights law on which Section 1557 is grounded. Thus, for example, the specific discriminatory actions listed under Title VI are incorporated here to govern the obligations of covered entities not to discriminate based on race, color, or national origin. We seek comments on this proposed approach.

Proposed paragraph (b)(1) of § 92.101 adopts the specific discriminatory actions prohibited by the Title VI implementing regulation, which appear in 45 CFR 80.3(b)(1) through (6).

Proposed paragraph (b)(2)(i) of § 92.101 addresses the specific prohibition of discrimination on the basis of disability with which recipients and State-based Marketplaces must comply. This paragraph adopts relevant provisions in the Section 504 implementing regulation for Federally assisted programs and activities at 45 CFR part 84. The provisions incorporated are the specific discriminatory actions prohibited at § 84.4(b); the program accessibility provisions at §§ 84.21 through 84.23(b); and the provisions governing education, health, welfare, and social services at §§ 84.31, 84.34, 84.37, 84.38, and 84.41–84.55. We do not propose adopting the program accessibility provision at § 84.23(c), addressing conformance with the Uniform Federal Accessibility Standards for the construction and alteration of facilities, because these standards are outdated. Section 92.203 of this proposed rule requires compliance with more contemporary standards.

Paragraph (b)(2)(ii) of § 92.101 addresses the specific prohibitions of discrimination on the basis of disability with which the Department, including the Federally-facilitated Marketplaces, must comply. This paragraph adopts relevant provisions in the Section 504 implementing regulation for Federally administered programs and activities at 45 CFR part 85. The provisions adopted are the specific discriminatory actions prohibited at § 85.21(b) and the program accessibility provisions at §§ 85.41 through 85.42 and 84.44 through 84.51.

Paragraph (b)(3) of § 92.101 adopts the specific discriminatory actions prohibited by the Title IX implementing regulation, which appear at 45 CFR 86.3(b)(1) through (8).

Paragraph (b)(4) of § 92.101 adopts the specific discriminatory actions prohibited by the Age Act implementing regulation, which appear at 45 CFR 91.11(b).

Paragraph (b)(5) of § 92.101 states that the specific discriminatory actions prohibited in § 92.101(b)(1) through (4) do not limit the general prohibition of discrimination in § 92.101(a). This statement is consistent with regulatory provisions in the implementing regulations for Title VI at 45 CFR 80.3(b)(5) and the Age Act at 45 CFR 91.11(c).

Paragraph (c) of § 92.101 incorporates the exceptions to the general prohibition of discrimination that appear in the implementing regulations for Title VI, Section 504, and the Age Act, as these exceptions have applied to health programs and activities for nearly 40 years. Generally, the exceptions in the Title VI, Section 504, and Age Act implementing regulations provide that it is not discriminatory to exclude a person from the benefits of a program that Federal law or executive order limits to a protected class. For instance, we incorporate the exceptions in the Age Act implementing regulation which address, among other things, age distinctions in Departmental regulations, and actions based on age where age is a factor necessary to the normal operation or achievement of a statutory objective of a program or activity. This would include allowable age rating under the ACA where issuers may vary premium rates based on age within a 3:1 ratio.[38]

Paragraph (c) of § 92.101 does not address the sex-based distinctions authorized in Title IX and its implementing regulation in the context of education programs or activities. As discussed previously, given Title IX's limitation to education programs and activities, these distinctions do not necessarily apply in the health care context.

Title IX and its implementing regulation allow some single-sex education programs (*e.g.,* separate toilet, locker room, and shower facilities in education programs and activities; contact sports in physical education classes; classes on human sexuality; and choruses) when certain requirements are met. Thirty organizations that filed comments in response to the RFI indicated that, to the extent single-sex programs are permitted under Section 1557 or this part, they should be narrowly tailored and necessary to accomplish an essential health purpose. Some commenters also indicated that single-sex programs should be permissible when they are necessary to serve the disadvantaged sex or to comply with constitutionally protected rights to privacy. Nearly 20 organizational commenters urged that, in the very narrow circumstances where single-sex programs or activities are permitted, Section 1557 should require equal access for all individuals in a manner consistent with their self-identified gender.

HHS does not propose to prohibit separate toilet, locker room, and shower facilities where comparable facilities are provided to individuals, regardless of sex. However, we continue to seek comment on what other sex-based distinctions, if any, should be permitted in the context of health programs and activities and the standards for permitting the distinctions (see also the previous discussion of § 92.2 regarding the application of this proposed rule). Examples of sex-based distinctions include a women's health clinic or a counseling program limited to male victims of domestic violence.

proposed rule is not intended to alter the scope of either Section 504 or Title IX in this regard.

[38] 45 CFR 147.102(a)(1)(iii). This is also consistent with language in the Section 1557 provision, which states that a person is protected from discrimination ''[e]xcept as otherwise provided for in this title.''

Finally, paragraph (d) of § 92.101 effectuates technical changes to apply the provisions incorporated in § 92.101(b) and (c) to covered entities obligated to comply with this proposed rule by, among other things, replacing references to ''recipient'' in the incorporated provisions with ''covered entity.''

Subpart C—Specific Applications to Health Programs and Activities

Section 1557 is unique among Federal civil rights laws in that it specifically addresses discrimination in health programs and activities. To provide additional specificity regarding nondiscrimination requirements in this setting, Subpart C builds upon pre-existing civil rights regulations referenced in Subpart B. Due to the nature and importance of health care, health-related insurance, and other health-related coverage to individuals and communities, OCR is proposing these additional specific requirements to ensure that covered entities have clear instruction in areas where OCR, through its enforcement work, has seen significant discrimination issues and complaints. We believe that these specific requirements will best assist covered entities in meeting their obligations and explain to individuals the scope of some of the protections afforded by Section 1557. We seek comment on this approach.

Meaningful Access for Individuals With Limited English Proficiency (§ 92.201)

Overview of § 92.201

Proposed § 92.201 effectuates Section 1557's prohibition of national origin discrimination as it affects individuals with limited English proficiency in health programs and activities of covered entities. About 25 million individuals in the United States, or about 8.5 percent, have limited proficiency in English.[39] These individuals may have been born in other countries or in the United States, such as some Native Americans or children of immigrants.[40] For purposes of this proposed part, an individual with limited English proficiency is a person whose primary language for communication is not English and who has a limited ability to read, write, speak, or understand English.

For individuals with limited English proficiency, lack of proficiency in English—and the use of non-English languages—is a direct outgrowth of, and is integrally tied to, their national origins.[41] As the Department of Justice explains, in its role coordinating Federal Departments' enforcement of Title VI, language serves as an identifier of one's national origin by '' 'permit[ing] an individual to express both the personal identity and membership in a community. . . .' ''[42] OCR's experience enforcing Title VI further demonstrates that disadvantaging an individual on the basis of his or her limited English proficiency is inextricably linked to discrimination on the basis of national origin.

It is thus well-established under Title VI and its implementing regulation that a prohibition on national origin discrimination requires covered entities to take reasonable steps to provide meaningful access to individuals with limited English proficiency.[43] As the Supreme Court recognized 40 years ago, the provision of language assistance services is essential to ensure the equality of opportunity promised by nondiscrimination laws. As the Court stated in *Lau* v. *Nichols,* which arose in the context of education,

> [T]here is no equality of treatment merely by providing [limited English proficient] students with the same facilities, textbooks, teachers, and curriculum [as their English speaking peers]; for students who do not understand English are effectively foreclosed from any meaningful education. . . . We know that those who do not understand English are certain to find their classroom experiences wholly incomprehensible and in no way meaningful.[44]

Based on these principles, OCR proposes § 92.201 to require covered entities to take reasonable steps to provide meaningful access to health programs and activities for all persons regardless of national origin. Specifically, proposed paragraph (a) of § 92.201 incorporates the Title VI standard, and paragraph (b) identifies requirements for the Director's evaluation of a covered entity's compliance with paragraph (a). Proposed paragraph (c) contains requirements for language assistance services, and proposed paragraph (d) includes specific requirements for oral interpretation. Proposed paragraph (e) sets forth restrictions on covered entities' use of certain persons to interpret for, or facilitate communication with, individuals with limited English proficiency. Proposed paragraph (f) provides that no individual with limited English proficiency shall be required to accept language assistance services. Each paragraph is described further as follows.

General Requirements (§ 92.201(a), (b) and (c))

Proposed § 92.201(a) adopts the well-established principle that covered entities must take reasonable steps to provide meaningful access to health programs and activities for all individuals with limited English proficiency that they serve or encounter in their health programs or activities.[45] Consistent with our longstanding enforcement of Title VI, we intend the general obligation in paragraph (a) to be a flexible standard that the Director

[39] U.S. Dep't of Commerce, U.S. Census Bureau, American FactFinder, Language Spoken at Home by Ability to Speak English for the Population 5 Years and Older, *supra n. 30* (serving as data source to calculate that 25 million of the 294 million individuals in the United States speak English less than ''very well''). OCR chose the three-year ACS, data (as opposed to the one-year or five-year data) because it best balances the currency and stability of the data.

[40] Dep't of Justice, Enforcement of Title VI of the Civil Rights Act of 1964—National Origin Discrimination Against Persons with Limited English Proficiency; Policy Guidance, 65 FR 50123, 50124 (Aug. 16, 2000) [hereinafter DOJ Policy Guidance, 2000].

[41] *See, e.g.,* 29 CFR 1606.1 (defining an individual's national origin in Equal Employment Opportunity Commission regulations as his or her ancestor's place of origin and an individual's ''physical, cultural or linguistic characteristics'').

[42] DOJ Policy Guidance 2000, 65 FR at 50124 & n.8 (citing *Hernandez* v. *New York,* 500 U.S. 352, 370 (1991) (plurality opinion)). *See also* 29 CFR 1606.1 (Equal Employment Opportunity Commission's definition of national origin, which includes an individual's linguistic characteristics); *Garcia* v. *Gloor,* 618 F.2d 264, 269 (''To a person who speaks only one tongue or to a person who has difficulty using another language when spoken in his home, language might well be an immutable characteristic. . . .'').

[43] *See, e.g.,* HHS LEP Guidance, *supra n. 17* at 68 FR at 47313 (''[T]he failure of a recipient of [F]ederal financial assistance from HHS to take reasonable steps to provide LEP persons with [a] meaningful opportunity to participate in HHS-funded programs may constitute a violation of Title VI and HHS's implementing regulations''); Policy Guidance, Title VI Prohibition against National Origin Discrimination As It Affects Persons with Limited English Proficiency, 65 FR 52762, 52765 (August 30, 2000) (explaining the requirement to take reasonable steps to provide meaningful access and to provide the ''language assistance services necessary to ensure such access. . . .''). *See also* E.O. 13166, *Improving Access to Services for Persons with Limited English Proficiency,* (Aug. 11, 2000) (requiring each Federal Department to improve access to Federally assisted programs and activities by persons with limited English proficiency and to implement a system by which individuals with limited English proficiency can meaningfully access the Departments' Federally conducted programs and activities).

[44] *Lau* v. *Nichols,* 414 U.S. 563, 566 (1974) (requiring a school district with students with limited English proficiency of Chinese origin to take reasonable steps to provide the students with a meaningful opportunity to participate in Federally funded educational programs).

[45] The Department's LEP Guidance provides an in-depth explanation of Title VI's prohibition against national origin discrimination as it affects limited English proficient populations and how recipients can determine what steps are reasonable to provide all individuals with limited English proficiency meaningful access. HHS LEP Guidance, *supra n. 17 at* 68 FR 47311.

considers in light of the particular facts.[46]

Because it incorporates long-standing principles under Title VI, the standard we propose in paragraph (a) provides familiarity and consistency for covered entities about the scope of their obligations. As we stated in the Department's initial policy guidance released in 2000 on the Title VI prohibition of national origin discrimination with respect to persons with limited English proficiency:

> The key to providing meaningful access for LEP persons is to ensure that the recipient/covered entity and LEP person can communicate effectively. The steps taken by a covered entity must ensure that the LEP person is given adequate information, is able to understand the services and benefits available, and is able to receive those for which he or she is eligible. The covered entity must also ensure that the LEP person can effectively communicate the relevant circumstances of his or her situation to the service provider.[47]

Further, the standard balances two core principles critical in effectuating Section 1557's prohibition of national origin discrimination.

The first principle is that the Department must ''ensure that [health programs and activities] aimed at the American public do not leave some behind simply because they face challenges communicating in English.'' [48] Safe and quality health care requires an exchange of information between health care provider and patient for the purposes of diagnoses, treatment options, the proper use of medications, obtaining informed consent, and insurance coverage of health-related services, among other myriad purposes.[49] This exchange of information is jeopardized when the provider and the patient speak different languages and may result in adverse health consequences and even death.[50] Indeed, the provision of health care services, by its ''very nature[,] requires the establishment of a close relationship with the client or patient that is based on sympathy, confidence and mutual trust.'' [51] Provider-patient communication is essential to the concept of patient centeredness, which is a core component of quality health care and has been shown to improve patients' health and health care.[52]

The second principle is that the level, type and manner of language assistance services required under paragraph (a) should vary based on the relevant facts, which may include the operations and capacity of the covered entity.

For these reasons, proposed § 92.201(b) identifies how the Director will evaluate whether a covered entity has met the requirement in paragraph (a).[53] Proposed § 92.201(b)(1) requires the Director to consider, and give substantial weight to, the nature and importance of the health program or activity, including the particular communication at issue. Proposed § 92.201(b)(2) requires the Director to take other relevant factors into account and lists some of the type of factors that the Director is required to consider, if relevant.

Section 92.201(b)(2)(i) and (ii) identify the length, complexity, and context of the communication as potentially relevant factors in a particular case. Where a communication is particularly long or complex, for example, a covered entity might be required to provide a means for an individual with limited English proficiency to be able to refer back to the information communicated through, for instance, a document written in the individual's primary language or an audio file of the information conveyed orally in the individual's primary language.

The prevalence of the primary language, among those eligible to be served or likely to be encountered by the health program or activity, in which the individual with limited English proficiency communicates, identified in paragraph (b)(2)(iii) of § 92.201, might also be relevant in a particular case. Where an individual with limited English proficiency speaks a language that has a low prevalence among those eligible to be served or likely to be encountered by the health program or activity, the covered entity might, for example and depending on other relevant factors, satisfy its obligations by providing, rather than a written document translated verbatim, a qualified interpreter who reads the brochure and provides an oral interpretation of the brochure into the non-English language.

The resources available to the covered entity and the costs of language assistance services might also be relevant in a particular case. Where the Director considers an entity's resources, he or she will evaluate all available resources, including the entity's capacity to leverage resources among its partners or to use its negotiating power to lower the costs at which language assistance services could be obtained.

Proposed § 92.201(c) makes clear that language assistance services required under paragraph (a) must be provided free of charge, be accurate and timely, and protect the privacy and independence of the individual with limited English proficiency.[54] Consistent with the observation in the Department's LEP Guidance that there is no one definition for ''timely'' that applies to every type of interaction with every type of recipient at all times, a determination of whether language assistance services are timely will depend on the specific circumstances of each case. However, the LEP Guidance makes clear that language assistance is timely when it is provided at a place and time that ensures equal access to persons of all national origins and avoids the delay or denial of the ''right, service, or benefit at issue.'' [55]

Specific Requirements for Interpreter Services § 92.201(d)

Proposed § 92.201(d) addresses standards applicable to oral interpretation. In particular, this paragraph provides that when a covered entity is required by proposed § 92.201(a) to provide oral interpretation as a reasonable step to provide meaningful access to an individual with limited English proficiency, the covered entity must offer that individual a qualified interpreter. As defined in § 92.4, a qualified interpreter for an individual with limited English proficiency possesses certain characteristics and skills necessary for him or her to interpret competently and effectively under the circumstances and

[46] Under Title VI, OCR investigates each complaint and conducts its compliance reviews on a case-by-case basis and tailors each case resolution to the particular facts of each case. For highlights of OCR's Title VI enforcement specific to the prohibition of national origin discrimination as it affects individuals with limited English proficiency, see Enforcement Success Stories Involving Individuals with Limited English Proficiency, Office for Civil Rights, U. S. Department Of Health And Human Services, *http://www.hhs.gov/ocr/civilrights/activities/examples/LEP/index.html* (last visited Jul. 20, 2015).

[47] 65 FR at 52765.

[48] 68 FR at 47312.

[49] *See, e.g.,* 65 FR at 52763.

[50] *See, e.g., id.*

[51] *Id.*

[52] Dep't. of Health & Human Servs., Agency for Health Care Research & Quality, Chapter 6, Patient Centeredness, National Healthcare Quality Report, 2013, *available at http://www.ahrq.gov/research/findings/nhqrdr/nhqr13/chap6.html.*

[53] The Department's LEP Guidance takes a similar approach of identifying the factors that OCR will consider, in determining the extent of a recipient's obligations to individuals with limited English proficiency. *See* 68 FR 47314–16.

[54] This principle is consistent with long-standing concepts reflected in the HHS LEP Guidance *supra n. 17. See* 68 FR at 47318, 47323 (with respect to privacy), 47316–19, 47322 (with respect to timeliness), and 47317–20, 47322 (with respect to services free of charge).

[55] *Id.* at 47316. Additionally, the National Standards for Culturally and Linguistically Appropriate Services in Health and Health Care (the National CLAS Standards) also emphasize the importance of timely language assistance.

adheres to generally accepted interpreter ethics principles, including client confidentiality.

Restricted Use of Certain Persons To Interpret or Facilitate Communication § 92.201(e)

Proposed § 92.201(e) identifies restrictions on the use of certain persons to provide language assistance services for an individual with limited English proficiency. This paragraph applies in addition to, and regardless of, the appropriate level, type or manner of language assistance services a covered entity is required to provide. As some RFI commenters shared, the use of incompetent or ad hoc interpreters, such as family members, friends, and children, is not uncommon and can have negative implications. Thus, proposed paragraph (e)(1) of § 92.201 prohibits a covered entity from requiring an individual with limited English proficiency to provide his or her own interpreter. Proposed paragraphs (e)(2)(i) and (ii), however, identify narrow and finite situations in which a covered entity may rely on an adult accompanying an individual with limited English proficiency to interpret. Proposed paragraph (e)(3) prohibits a covered entity from relying on a minor child to interpret or facilitate communication and identifies an exception to this prohibition that is narrower in scope than the exception identified in (e)(2)(i) and (ii).

The provisions of § 92.201(d) and (e) codify standards described in the Department's LEP Guidance regarding the use of family members or friends as interpreters or to facilitate communication.[56] These standards account for the issues of competency, confidentiality, privacy, and conflict of interest that arise as a result of relying on an informal (or ad hoc) interpreter. The provisions of § 92.201(d) and (e) are consistent with oral interpretation standards that OCR has advanced through its resolution of Title VI cases and compliance reviews.[57]

In lieu of the approach we propose in § 92.201(d) and (e), OCR considered proposing that all covered entities have the capacity to provide, in their health programs or activities, qualified interpreters for individuals with limited English proficiency through telephonic oral interpretation services available in at least 150 non-English languages. We considered proposing this requirement to ensure that every covered entity could provide a base level of cost-effective language assistance services to the nation's increasingly linguistically diverse populations. This alternate approach, relative to the approach we propose in § 92.201(d) and (e), likely would improve access to health programs and activities for individuals with limited English proficiency; would improve the clarity of covered entities' obligations when communicating orally with individuals; and would mirror the requirement for Health Insurance Marketplaces and qualified health plan issuers to provide telephonic oral interpretation services described further below.[58]

Despite these benefits, we were concerned with proposing an overly prescriptive approach that regulated the manner in which covered entities take reasonable steps to provide meaningful access to individuals with limited English proficiency, given the range in the types, sizes, and service areas of covered entities' health programs and activities regulated by Section 1557 and this proposed rule. We seek comment on what oral interpretation services, if any, we should require and how such approaches appropriately balance the provision of meaningful access to individuals with limited English proficiency while preserving covered entities' flexibilities to identify the means of providing such access.

Even without a requirement in this proposed rule to provide telephonic oral interpretation services, OCR expects that most entities will, at a minimum, have the capacity to provide individuals with limited English proficiency with qualified interpreters remotely, given the widespread commercial availability of relatively low-cost language assistance services such as remote oral interpretation via telephone, as well as the nature and importance of covered entities' health programs or activities.

Acceptance of Language Assistance Services Is Not Required § 92.201(f)

Proposed paragraph (f) provides that no individual with limited English proficiency shall be required to accept language assistance services, consistent with an individual's right to self-determination. Paragraph (f) also demonstrates the corollary that a covered entity cannot coerce an individual to decline language assistance services. If an individual with LEP voluntarily declines an offer of language assistance services from the covered entity, a covered entity could denote, in the individual's file or records, the language assistance services offered and the declination.[59]

Covered entities, including Health Insurance Marketplaces, Medicaid programs, and qualified health plan issuers, are reminded that independent of proposed § 92.201, they must comply with any applicable language access requirements in other laws and regulations.[60] For instance, Marketplaces and qualified health plan issuers must provide language assistance services for applicants and enrollees who are limited English proficient,[61] free of charge, including telephonic oral interpretation services in at least 150 non-English languages.[62] Moreover, under Public Health Service Act Section 2719, as added by the ACA and incorporated by reference into ERISA and the Internal Revenue Code,

[56] HHS LEP Guidance, *supra n. 17 at* 68 FR at 47317–18.

[57] *See, e.g.,* Voluntary Resolution Agreement between U.S. Dep't of Health & Human Servs., Office for Civil Rights and Mee Memorial Hosp., OCR Transaction Nos. 12–143846, 13–1551016, & 13–153378, pt. II.J. (2014), *available at http://www.hhs.gov/ocr/civilrights/activities/agreements/mee.html* (defining qualified interpreter); Voluntary Resolution Agreement between U.S. Dep't of Health & Human Servs., Office for Civil Rights and Montgomery County Dep't of Soc. Servs., OCR Transaction No. 08–79992, pts. II.E (defining qualifications of an ''interpreter'' under the agreement), IV.H (requiring timely, competent language assistance); & IV.L (identifying interpreter standards), *available at http://www.hhs.gov/ocr/civilrights/activities/examples/LEP/mcdssra.html.*

[58] *See* 45 CFR 155.205(c)(2)(i)(A).

[59] *See* HHS LEP Guidance, *supra n. 17* at 68 FR at 47318 (identifying recordkeeping of language assistance services offered in provided as a best practice).

[60] *See, e.g.,* 42 U.S.C. 18031(e)(3)(B) (requiring health plans seeking certification as qualified health plans to provide information on certain claims payment and rating practices, cost-sharing, and enrollee and participant rights in plain language, which means language that the intended audience, including individuals with limited English proficiency, can readily use and understand); 42 U.S.C. 18031(i)(3)(E) (statutorily requiring Navigators to provide culturally and linguistically appropriate services); 45 CFR 155.210(e)(5) (requiring Navigators to provide culturally and linguistically appropriate services), 42 CFR 431.905 (requiring State agencies providing Medicaid programs to provide language assistance services for applicants and beneficiaries who are limited English proficient).

[61] *See, e.g.,* 45 CFR 155.205(c)(2) (requiring accessibility of information provided to individuals with limited English proficiency); 155.205(a) (requiring Marketplace toll-free call center to be accessible to individuals with limited English proficiency), 155.205(b) (requiring Marketplace Web site to be accessible to individuals with limited English proficiency), 155.205(d) (requiring Marketplace consumer assistance functions, including the Navigator program in 45 CFR 155.210, to be accessible to individuals with limited English proficiency), 155.205(d) (requiring Marketplace outreach and education activities to be accessible to individuals with limited English proficiency), 155.230(b) (requiring applications, forms, and notices to be accessible to individuals with limited English proficiency), 156.250 (requiring meaningful access to qualified health plan information). Starting in benefit year 2017, 45 CFR 155.205(c)(2)(iii) requires Marketplaces and QHP issuers to provide taglines in 15 non-English languages into translate Web site content in certain languages.

[62] 45 CFR 155.205(c)(2)(i)–(iii).

non-grandfathered group health plans and health insurance issuers offering non-grandfathered health coverage are required to provide relevant notices in a culturally and linguistically appropriate manner.[63] We invite comment on whether and, if so, to what extent and how, the requirements under these different authorities should be harmonized.

Alternative Approaches

Although we believe that the approach of the proposed rule best serves the purposes of the law, we considered a regulatory scheme requiring covered entities to provide meaningful access to each individual with limited English proficiency by providing effective language assistance services, at no cost, unless such action would result in an undue burden or a fundamental alteration of the health program or activity. Under this approach, a covered entity would be able to raise an undue burden or fundamental alteration defense but would be required, if it made this showing successfully, to take another action to provide meaningful access if there was one that was less burdensome or that did not fundamentally alter the nature of the health program or activity.

We also considered a regulatory scheme that would require a predetermined range of language assistance services in certain non-English languages. The language assistance services required and the languages required would vary based on certain factors, such as whether the covered entity is of a certain type or size, has frequent contact with individuals with limited English proficiency, or operates particularly important health programs or activities, among other potential factors. Under this approach, instead of requiring the Director to evaluate each case on its particular facts, the Director would evaluate a covered entity's compliance based on whether the entity provided the range of language assistance services in the non-English languages specified. Potential categories of covered entities that could have enhanced obligations to provide language assistance services under this alternative approach could include State agencies administering Medicaid or CHIP, Health Insurance Marketplaces, or the Department in its operation of its health programs or activities. Other potential categories could include the following types of covered entities that have a minimum number of beds, employees, or locations: Hospitals, nursing homes or skilled nursing facilities, home health agencies, and retail pharmacies (including mail-order pharmacies). We seek comment on whether certain categories of covered entities should have enhanced obligations to provide language assistance services and, if so, what characteristics of covered entities should define these categories.

We also considered a regulatory scheme requiring covered entities to provide a range of language assistance services in the non-English languages spoken by State-wide populations with limited English proficiency that meet defined thresholds. Such thresholds would provide a minimum number of non-English languages covered entities would be required to provide in delivering oral interpretation services; requirements for written translation of vital documents and Web site content; and requirements for including taglines on vital documents and on Web sites. For instance, we considered thresholds triggering a requirement to translate standardized vital documents based on number of languages (*e.g.,* top ten languages spoken by individuals with limited English proficiency); percentage of language speakers (*e.g.,* languages spoken by at least 5% of individuals with limited English proficiency); the number of language speakers (*e.g.,* languages spoken by at least 5,000 individuals with limited English proficiency); and composite thresholds mixing and matching these approaches. For example, we considered a composite threshold requiring the translation of standardized vital documents in the top ten languages spoken State-wide by individuals with limited English proficiency and the languages spoken by at least 10,000 individuals with limited English proficiency State-wide. We also considered a composite threshold that would require the translation of vital documents in the top five languages spoken State-wide by individuals with limited English proficiency and the languages spoken by at least 5,000 individuals with limited English proficiency State-wide.

We seek comment on whether OCR should require thresholds, and if so, what thresholds should be required, and to what geographic areas or service areas the thresholds should apply. If thresholds should be required, we seek comment on the time that should be allowed for covered entities to come into compliance with the thresholds, including whether this proposed rule should permit covered entities to implement their obligations with a phased-in approach. We also seek comment on other methodologies for formulating language access thresholds that would result in meaningful access for individuals regardless of national origin, while being mindful of the potential burden on covered entities.

We further considered adopting a requirement for covered entities to be systematically prepared to provide language assistance services in their health programs or activities, such as through the establishment of policies and procedures or through other advanced planning mechanisms. In OCR's experience, covered entities are in a better position to meet their obligations to provide language assistance services in a timely manner to individuals with limited English proficiency when those entities identify, in advance, the types and levels of services that will be provided in each of the contexts in which the covered entity encounters individuals with limited English proficiency. Thus, the Department's LEP guidance encourages covered entities to conduct advanced planning through the establishment and implementation of language access plans.[64]

An advanced planning requirement could require each covered entity to identify all resources for providing language assistance services; to annually assess the frequently-encountered or highly prevalent languages in the

[63] The Department of Labor, HHS and the Department of Treasury issued interim final rules implementing the Internal Claims and Appeals and External Review Processes under the Public Health Service Act Section 2719, as added by the ACA, which describes the ''culturally and linguistically appropriate'' standard requirements. *See* 29 CFR 2590.715–2719(e); 45 CFR 147.135 (e). *See also* 80 FR 34292, 34310 (June 16, 2015) (Summary of Benefits and Coverage and Uniform Glossary Final Rule), extending the culturally and linguistically appropriate standards set forth in the internal claims and appeals and external review to the requirements of the Summary of Benefits and Coverage and Uniform Glossary requirements. That standard requires language assistance services for individuals who speak primary languages other than English and reside in a county that meets the threshold under the rules. Specifically, the rules establish a threshold with respect to the percentage of people residing in a particular county who are literate only in the same non-English language (currently 10%) based on American Community Survey data published by the United States Census Bureau. *See* 29 CFR 2590.715–2719(e)(3). For individuals residing in counties that meet this threshold, the plan or issuer must provide oral language assistance services (such as a telephone customer assistance hotline) that include answering questions in any applicable non-English language and providing assistance with filing claims and appeals in any applicable non-English language. The plan or issuer must also provide, upon request, notices in any applicable non-English language and taglines must be included in the English versions of all notices provided to such individuals.

[64] *See* HHS LEP Guidance, *supra n. 17* at 68 FR at 47319–21 (encouraging recipients to develop a language access plan (called an ''LEP plan'' in the guidance)).

service area of the health program or activity; to establish written procedures to which frontline staff could refer when encountering individuals with limited English proficiency; and to monitor and oversee the quality of language assistance services provided. An advanced planning requirement could also require each covered entity to build its inventory of translated materials and capacity to provide oral language assistance to meet the needs of the national origin populations that the entity frequently serves.

OCR solicited information in its Request for Information about covered entities' experience with one mechanism for advanced planning—developing and implementing language access plans. Nearly all of the commenters who responded to the question regarding language access plans had experience developing and implementing plans themselves or providing technical assistance to other organizations that were doing so. Commenters identified benefits, such as: Increasing the likelihood of ensuring nondiscrimination on the basis of national origin with respect to individuals with LEP; facilitating consistent and appropriate language assistance services; and defining clear staff obligations and roles. Most commenters who responded to this question described language access plans or the institution of organizational policies and procedures as simple and non-burdensome. We seek comment on whether § 92.201 should include a requirement for covered entities to be systematically prepared to provide language assistance services in their health programs or activities, and if so what advanced planning mechanisms should be required and why.

Covered entities that are already developing or implementing language access plans, or otherwise assessing their language assistance needs, are encouraged to continue such efforts. Covered entities should be aware, however, that engaging in such planning is not a defense for failing to provide language assistance services to any particular individual, at all or in an untimely manner, if such services are reasonable steps to provide meaningful access. Covered entities that are conducting advanced planning should consider how they can ensure that language assistance services are available in their health programs and activities as they simultaneously improve their operational capacities to provide effective language assistance services into the future.

Effective Communication for Individuals With Disabilities (§ 92.202)

Proposed § 92.202 incorporates the provisions governing effective communication with individuals with disabilities found in the regulation implementing Title II of the ADA, which applies to State and local government entities.[65] OCR typically looks to the ADA for guidance in interpreting Section 504 as the two laws contain very similar standards. The Title II implementing regulation and the regulation implementing Title III of the ADA, which applies to places of public accommodation and commercial facilities, were amended in 2010. The updated regulations provide clear, specific, and current guidance in understanding rights and responsibilities respecting effective communication with individuals with disabilities.

The amended regulations incorporate longstanding Department of Justice interpretations regarding effective communication with individuals with disabilities under the ADA, which are consistent with OCR's enforcement of Section 504 and are a sound set of standards for incorporation into the Section 1557 regulation.

OCR considered whether to incorporate the standards in the regulation implementing Title II of the ADA or in the regulation implementing Title III of the ADA, or the standards in both regulations. As summarized by the Department of Justice,[66] standards regarding effective communication under both regulations are very similar. There are, however, limited differences between the Title II and Title III regulations, regarding limitations on the duty to provide a particular aid or service and the obligation under the Title II regulation to give primary consideration to the choice of an aid or service requested by the individual with a disability.

OCR proposes to apply the Title II standards to entities covered under the proposed rule. First, State or local government entities that are covered under the proposed rule are already subject to the Title II standards. Second, the other entities covered under the proposed rule are health programs and activities that either receive Federal financial assistance from HHS or are conducted directly by HHS. Although OCR could apply Title II standards to States and local entities and Title III standards to private entities, we believe it is appropriate to hold all recipients of Federal financial assistance from HHS to the higher Title II standards as a condition of their receipt of that assistance. OCR also believes it appropriate to hold HHS itself to the same standards to which the Department subjects the recipients of its financial assistance.

Where the regulatory provisions referenced in § 92.202 use the term ''public entity,'' that term shall be replaced with ''covered entity.''

Accessibility Standards for Buildings and Facilities (§ 92.203)

The Section 504 regulatory provisions incorporated into Subpart B in this proposed regulation contain program accessibility requirements that apply to existing facilities as well as new construction and alterations. This proposed provision establishes specific accessibility standards for new construction and alterations. OCR notes that these standards are consistent with existing standards under the ADA.

Under § 92.203(a) of the proposed rule, each facility or part of a facility in which health programs or activities are conducted that is constructed or altered by or on behalf of, or for the use of, a recipient or State-based marketplace shall comply with the 2010 ADA Standards for Accessible Design (2010 Standards), as defined in 28 CFR 35.104, if construction or alteration was commenced on or after [18 MONTHS FROM DATE OF PUBLICATION OF FINAL RULE]. All newly constructed or altered buildings or facilities subject to this section shall comply with the requirements for a ''public building or facility'' as defined in Section 106.5 of the 2010 Standards.

Under § 92.101(b)(2)(i) of the proposed rule, new construction and alterations of such facilities are also subject to the new construction standards found in the Section 504 implementing regulation at 45 CFR 84.23(a) and (b). OCR is not incorporating 45 CFR 84.23(c), which treats compliance with the Uniform Federal Accessibility Standards as compliance with 45 CFR 84.23(a) and (b) because the 2010 Standards are more current than the Uniform Federal Accessibility Standards. Moreover, nearly all of the facilities covered under the proposed rule are already subject to the 2010 Standards. This provision will require facilities subject to the ADA and Section 1557 to comply with the same accessibility standards for new construction or alterations.

[65] Comments received during the RFI period illustrate that, despite longstanding existing Federal civil rights laws, individuals with disabilities continue to face inequality and discrimination in health care.

[66] *http://www.ada.gov/effective-comm.htm.*

However, under § 92.203(b) of the proposed rule, each facility or part of a facility in which health programs or activities are conducted that is constructed or altered by or on behalf of, or for the use of, a recipient or State-based Marketplace before [18 MONTHS FROM DATE OF PUBLICATION OF FINAL RULE] in conformance with the Uniform Federal Accessibility Standards, the 1991 Standards, or the 2010 Standards shall be deemed to comply with the requirements of this section and with 45 CFR 84.23 (a) and (b), cross referenced in § 92.101(b)(2)(i) with respect to those facilities. Thus, if the construction or alteration of facilities began prior to the effective date of paragraph (a) of this section, the facilities shall be deemed in compliance if they were constructed or altered in conformance with applicable standards at the time of their construction or alteration.

Under § 92.203(c) of the proposed rule, each building or part of a building that is constructed or altered by or on behalf of, or for the use of, the Department must be designed, constructed, or altered so as to be readily accessible to and usable by individuals with disabilities. The definitions, requirements, and standards of the Architectural Barriers Act, as established in Appendices C and D to 36 CFR part 1191, apply to buildings and facilities covered by this section.

OCR considered adding specific language regarding accessibility standards for medical diagnostic equipment. However, we are aware that the United States Access Board is currently developing standards for accessible medical diagnostic equipment and, therefore, are deferring on proposing specific accessibility standards for medical equipment at this time. Once the United States Access Board standards are promulgated, OCR intends to issue regulations or policies that require covered entities to conform to those standards. We request comment on this proposal. We note that a health program or activity's use of medical diagnostic equipment is covered by Section 1557 and this proposed rule under the general prohibition of discrimination on the basis of disability in § 92.101.

Accessibility of Electronic and Information Technology (§ 92.204)

Section 92.204(a) of the proposed rule requires covered entities to ensure that their health programs or activities provided through electronic and information technology are accessible to individuals with disabilities, unless doing so would impose undue financial and administrative burdens or would result in a fundamental alteration in the nature of an entity's health program or activity.[67] For example, a Health Insurance Marketplace creating a Web site for application for health insurance coverage must ensure that individuals with disabilities have an equal opportunity to benefit from the Web site's tool that allows comparison of health insurance coverage options, quick determination of eligibility, and facilitation of timely access to health insurance coverage by making its new Web site accessible to individuals who are blind or who have low vision.

This provision is consistent with existing standards applicable to covered entities. Specifically, Section 508 of the Rehabilitation Act requires that electronic and information technology developed, procured, maintained, or used by Federal agencies be accessible for individuals with disabilities. Section 508 applies to HHS administered health programs or activities, including the Federally-facilitated Marketplaces. Section 504 and the ADA, which apply to recipients of Federal financial assistance, and to State and local government entities and places of public accommodation, respectively, similarly have been interpreted to require that covered entities' programs, services, and benefits provided through electronic and information technology be accessible to individuals with disabilities.[68]

Section 92.204(b) proposes to require State-based Marketplaces and recipients of Federal financial assistance to ensure that their health programs and activities provided through Web sites comply with the accessibility requirements of Title II of the ADA. OCR has decided to adopt Title II requirements for a number of reasons. First, State-based Marketplaces, as State entities, are already subject to the ADA Title II requirements. Second, even though recipients of Federal financial assistance from HHS include both entities covered by Title II of the ADA, as State and local government entities, and entities covered by Title III of the ADA, as places of public accommodation and commercial facilities, we believe it is appropriate to apply one uniform standard to all recipients of Federal financial assistance from HHS under the proposed rule. Further, it is reasonable to hold recipients of Federal financial assistance from HHS to the Title II ADA requirements (rather than those of Title III of the ADA), since Title II is modeled on Section 504, which applies to recipients of Federal financial assistance. Our proposed regulatory text cross-references the Title II regulations as a whole, which would therefore incorporate any future changes to the Title II regulations.

These requirements are informed by this Department's extensive experience with web-based technology through Federal grant-making programs, including programs that provide funds for State infrastructure changes to allow electronic applications for participation in the Medicaid program and the Health Insurance Marketplaces, provider adoption of electronic health records, and the development of web-based curricula for health care professionals.

Based on the Department's prior experience in this field, we believe that including an explicit requirement for electronic and information technology is necessary to clarify the obligations of covered entities to make this technology accessible. In addition, we are concerned that without an explicit requirement for accessible electronic and information technology, people with disabilities will not have opportunities to participate in services, programs, and activities that are equal to and as effective as those provided to others, further exacerbating existing health disparities for persons with disabilities. The RFI yielded numerous comments and concerns about the lack of accessibility of electronic and information technology and the incidents of and potential for discrimination, for example with respect to health information.

OCR initially considered whether to limit the explicit accessibility requirements to a covered entity's Web site only, rather than all of a covered entity's electronic and information technology. However, given the existing requirements under Section 504, Section 508, and the ADA applicable to information provided through electronic and information technology as a whole, and given the importance of such technologies, such as kiosks and applications, to access to health care, health-related insurance and other health-related coverage, we have decided to include an explicit accessibility requirement that applies to all of a covered entity's electronic and information technology. We seek comment on this proposal.

[67] The terms ''undue financial and administrative burdens'' and ''fundamental alteration'' as used in this part have the same meaning that they have under the ADA.

[68] *See, e.g.,* discussion in Dep't of Justice, Advanced Notice of Proposed Rulemaking: Accessibility of Web Information and Services of State and Local Government Entities and Public Accommodations, 75 FR 43460, 43462–67 (Jul. 26, 2010) discussing Section 504 and Title II of the ADA).

In addition to proposing that Web sites of recipients of Federal financial assistance and State-based Marketplaces comply with the accessibility requirements of Title II of the ADA, OCR also considered requiring all covered entities to ensure that all their electronic and information technology comply with specific accessibility standards, such as standards developed pursuant to Section 508 by the Access Board at 36 CFR part 1194, the Worldwide Web Consortium's Web Accessibility Initiative's WCAG 2.0 AA, or other standards that provide equal or greater accessibility to individuals with disabilities. As part of this alternative, OCR considered whether a phased-in approach to accessibility similar to the one recently taken by the Department of Transportation might be appropriate.[69] Most States already apply, to State agency Web sites, a standard based on Section 508 or WCAG, thereby reducing any regulatory burden from such a requirement.[70] In addition, obligating covered entities to make their electronic information and technology comply with the accessibility requirements of Title II of the ADA should facilitate their compliance with any accessibility standards adopted in the future. Further, the Department of Justice is applying WCAG standards to municipal and public accommodations entities in publicly announced settlements.[71] Finally, this alternative would provide more clarity for those covered entities and enhance access for individuals with disabilities.

However, this alternative could potentially place a greater burden on recipients of Federal financial assistance and Title I entities. In addition, we are aware that the Access Board is in the process of amending and updating the Section 508 standards applicable to electronic and information technology. Given these developments and circumstances, we are proposing a general accessibility performance standard for electronic and information technology, rather than a requirement for conformance to a specific set of accessibility standards. The application of this general accessibility performance standard will be informed by future rulemaking by the Access Board and the Department of Justice. We seek comment on whether the regulation should impose a general accessibility performance standard for electronic and information technology or require that electronic and information technology comply with a specific set of standards, such as the Section 508 or WCAG standards.

As noted, under the proposed rule, covered entities must make their health programs and activities provided through electronic and information technology accessible, unless doing so would impose undue financial and administrative burdens or would result in a fundamental alteration in the nature of the health program or activity. In determining whether an action would be an undue burden, a covered entity must consider all resources available for use in the funding or operation of the health program or activity.

When undue financial and administrative burdens or a fundamental alteration are determined to exist, the covered entity is still required to provide information in a format other than an accessible electronic format that would not result in such undue financial and administrative burdens or a fundamental alteration, but would ensure, to the maximum extent possible, that individuals with disabilities receive the benefits or services of the health program or activity that are provided through electronic and information technology.

Requirement To Make Reasonable Modifications (§ 92.205)

Section 92.205 of the proposed rule provides that a covered entity shall make reasonable modifications in policies, practices, or procedures when necessary to avoid discrimination on the basis of disability, unless the covered entity can demonstrate that the modification would fundamentally alter the nature of the health program or activity. This provision is consistent with the U.S. Supreme Court's decision interpreting Section 504 in *Alexander* v. *Choate,* 469 U.S. 287 (1985), Title II of the ADA, and OCR's longstanding interpretation of Section 504.

Equal Program Access on the Basis of Sex (§ 92.206)

Section 92.206 proposes that covered entities be required to provide individuals equal access to their health programs or activities without discrimination on the basis of sex and proposes that covered entities treat individuals consistent with their gender identity. This provision applies to all health programs and activities, and prohibits, among other forms of adverse treatment, the denial of access to facilities administered by the covered entity. This proposed approach is consistent with the principle that discrimination on the basis of sex includes discrimination on the basis of gender identity and that failure to treat individuals in accordance with their gender identity may constitute prohibited discrimination. It is also consistent with recent guidance issued and enforcement actions taken by the U.S. Department of Education, the U.S. Department of Justice, and the Equal Employment Opportunity Commission.[72]

The limited exception to the requirement that covered entities treat individuals consistent with their gender identity is that a covered entity may not deny or limit health services that are ordinarily or exclusively available to individuals of one gender based on the fact that the individual's sex assigned at birth, gender identity, or gender otherwise recorded in a medical record or by a health insurance plan is different from the one to which such health services are ordinarily or exclusively available. The exception applies only in limited circumstances. For example, a covered entity may not deny an individual treatment for ovarian cancer where the individual could benefit medically from the treatment, based on the individual's identification as a transgender male.

[69] *See* Nondiscrimination on the Basis of Disability in Air Travel: Accessibility of Web sites and Automated Kiosks at U.S. Airports, 76 FR 59307 (Sept. 26, 2011).

[70] The following states apply WCAG 2.0 (AA) to State agency Web sites: Alaska (*http://doa.alaska.gov/ada/resources/web.html*) (note that Alaska's standard for training, authoring, and procurement of accessible electronic and information technology is currently consistent with Level A Success Criteria and Conformance Requirements and Alaska is migrating toward WCAG 2.0 AA compliance as tools, training and resources permit; Georgia (*http://georgia.gov/accessibility*); Hawaii (*https://portal.ehawaii.gov/page/accessibility/*); Minnesota (*mn.gov/mnit/images/Stnd_State_Accessibility.pdf*). Virginia and Oklahoma have statutory requirements to apply Section 508 to State agencies (*http://section508.gov/state-policy*), and many others have adopted similar policies (*http://www.ssbbartgroup.com/reference/laws-and-standards/state-and-local-laws/*). In addition, States may utilize third party test software programs, which may utilize a Section 508/WCAG or a higher standard, to determine the accessibility of its Web sites.

[71] ADA Enforcement Activities—Settlements (Department of Justice) *http://www.ada.gov/enforce_activities.htm#settlements.*

[72] *See, e.g.,* U.S. Dep't of Educ., Questions and Answers on Title IX and Single-Sex Elementary and Secondary Classes and Extracurricular Activities (2014); U.S. Dep't of Justice, Office of Justice Programs, Office for Civil Rights, Frequently Asked Questions, Nondiscrimination Grant Condition in the Violence Against Women Reauthorization Act of 2013 (2014); Resolution Agreement Between the Arcadia Unified School District, the U.S. Dep't of Educ., Office for Civil Rights, and the U.S. Dep't of Justice, Civil Rights Division, OCR Case Number 09–12–1020, DOJ Case Number 169–12C–70 (July 24, 2013); *Complainant* v. *McHugh,* EEOC Appeal No. 0120133395 (Apr. 1, 2015). *See also* U.S. Dep't of Educ., Questions and Answers on Title IX and Sexual Violence at B–2, available at *http://www2.ed.gov/about/offices/list/ocr/docs/qa-201404-title-ix.pdf.*

Nondiscrimination in Health-Related Insurance and Other Health-Related Coverage (§ 92.207)

Section 92.207 of the proposed rule emphasizes and provides specific details regarding the prohibition of discrimination on the basis of race, color, national origin, sex, age, or disability in the provision and administration of health-related insurance or other health-related coverage. This prohibition applies to all covered entities that provide or administer health-related insurance or other health-related coverage, including health insurance issuers and group health plans that are recipients of Federal financial assistance and the Department in the administration of its health-related coverage programs. This section is independent of, but complements, the nondiscrimination provisions at 45 CFR 155.120(c)(1) and (2) that apply to the Health Insurance Marketplaces and 45 CFR 156.200(e) that apply to issuers of qualified health plans through the Health Insurance Marketplaces with respect to their qualified health plans. These provisions prohibit discrimination on the basis of race, color, national origin, disability, age, sex, gender identity or sexual orientation, and entities covered under them and Section 1557 are obligated to comply with both sets of requirements.

Based on the longstanding civil rights principles discussed in connection with the definition of ''health program or activity'' in § 92.4 of this proposed rule, we propose to apply this part to all issuers that receive Federal financial assistance, whether those issuers' products are offered through the Marketplace, outside the Marketplace, in the individual or group health insurance markets, or as an employee health benefit program through an employer-sponsored group health plan. Thus, for example, an issuer that participates in the Marketplace and thereby receives Federal financial assistance, and that also offers plans outside the Marketplace, will be covered by the proposed regulation for all of its health plans, as well as when it acts as a third party administrator for an employer-sponsored group health plan.[73]

Paragraph (a) of the proposed rule provides a general nondiscrimination requirement, and paragraph (b) provides specific examples of prohibited actions. Paragraphs (b)(1) and (2) address the prohibition on denying, cancelling, limiting, or refusing to issue or renew a health-related insurance plan or policy or other health-related coverage on the basis of an enrollee's or prospective enrollee's race, color, national origin, sex, age, or disability, and the use of marketing practices or benefit designs that discriminate on these bases.

The proposed rule does not require plans to cover any particular benefit or service, but a covered entity cannot have a coverage policy that operates in a discriminatory manner. For example, a plan that covers inpatient treatment for eating disorders in men but not women would not be in compliance with the prohibition of discrimination based on sex. Similarly, a plan that covers bariatric surgery in adults, but excludes such coverage for adults with particular developmental disabilities would not be in compliance with the prohibition on discrimination based on disability.

Paragraphs (b)(3) through (5) of the proposed rule specifically address discrimination faced by transgender individuals in accessing coverage of health services. We propose in paragraph (b)(3) that to deny or limit coverage, deny a claim, or impose additional cost sharing or other limitations or restrictions, on any health service is impermissible discrimination when the denial or limitation is due to the fact that the individual's sex assigned at birth, gender identity, or gender otherwise recorded by the plan or issuer is different from the one to which such services are ordinarily or exclusively available.[74] For example, although many sex-specific preventive care services (*e.g.* pelvic or prostate exams or mammograms) are routinely covered by covered entities, RFI commenters stated that individuals are routinely denied coverage for medically appropriate sex-specific health services due to their gender identity or because they are enrolled in their health plans as one sex, where the health service is generally associated with another sex. Under our proposed rule, coverage for medically appropriate health services must be made available on the same terms for all individuals, regardless of sex assigned at birth, gender identity, or recorded gender. Thus, for example, coverage cannot be denied for an individual for whom a pelvic exam is medically appropriate based on the fact that the individual either identifies as a transgender man or is enrolled in the health plan as a man.[75]

In addition, many health-related insurance plans or other health-related coverage, including Medicaid programs, currently have explicit exclusions of coverage for all care for beneficiaries related to gender dysphoria or associated with gender transition. Historically, covered entities have justified these blanket exclusions by categorizing transition-related treatment as cosmetic or experimental.[76] However, such across-the-board categorization is now recognized as outdated and not based on current standards of care. For example, a May 2013 decision of the HHS Departmental Appeals Board invalidated Medicare's National Coverage Determination 140.3, which disallowed coverage of ''transsexual surgery'' because the record indicated that the blanket denial of coverage was not reasonably based on the state of current medical science.[77]

For similar reasons, an increasing number of states, including, California,[78] Colorado,[79] Connecticut,[80] Illinois,[81] Massachusetts,[82] Nevada,[83]

[73] Where an entity that acts as a third party administrator for an employer's employee health benefit plan is legally separate from an issuer that receives Federal financial assistance for its insurance plans, we will engage in a case-by-case inquiry to evaluate whether that entity is appropriately subject to Section 1557.

[74] Under Section 207(a), a covered entity would be barred from denying coverage of any claim (not just for sex-specific services) on the basis that the enrollee is transgender.

[75] OCR recognizes that insurers may use computer systems, that at times, flag a gender mismatch for services requested; such flagging, by itself, would not be impermissible where it does not result in a denial of services or a claim for services.

[76] Liza Khan, *Transgender Health at the Crossroads,* 11 Yale J. Health Pol'y L. & Ethics 375,377 (2011).

[77] U.S. Dep't of Health and Human Serv. Departmental Appeals Board. Appellate Division NCD 140.3, Docket No. A–13–87, Decision No. 2576 (May 30, 2013). The board cited to the World Professional Association for Transgender Health (WPATH), an international multidisciplinary professional association that publishes Standards of Care for the Health of Transsexual, Transgender, and Gender Nonconforming People (7th ed. 2012), which provides clinical guidance for health professionals.

[78] State of California Department of Managed Health Care. (2013). Gender Nondiscrimination Requirements, Letter No. 12–K, *available at https://www.dmhc.ca.gov/Portals/0/LawsAndRegulations/DirectorsLettersAndOpinions/dl12k.pdf.*

[79] Colorado Department of Regulatory Agencies. (2013). Division of Insurance Bulletin No. B–4.49, *available at http://www.one-colorado.org/wp-content/uploads/2013/03/B-4.49.pdf.*

[80] Connecticut Insurance Department. (2013). Bulletin IC–34, *available at http://www.ct.gov/cid/lib/cid/Bulletin_IC-37_Gender_Identity_Nondiscrimination_Requirements.pdf.*

[81] Illinois Department of Insurance. (2014). Company Bulletin 2014–10, *available at http://insurance.illinois.gov/cb/2014/CB2014-10.pdf.*

[82] Massachusetts Office of Consumer Affairs and Business Regulation. (2014). Division of Insurance Bulletin 2014–03, *available at http://www.mass.gov/ocabr/docs/doi/legal-hearings/bulletin-201403.pdf.*

[83] Nevada Division of Insurance. (2015). 15–002—Prohibition of Denial, Exclusion, or Limitation of Medically Necessary Health Care Services on the Basis of Gender Identity or Expression, *available at http://doi.nv.gov/uploadedFiles/doinvgov/_public-documents/News-Notices/Bulletins/Bulletin%2015-002.pdf.*

New York,[84] Oregon,[85] Vermont,[86] Washington State,[87] and the District of Columbia,[88] have laws and policies providing that exclusions and denials of coverage for treatment for gender identity disorder are or are likely to be discriminatory in at least some circumstances.[89] Likewise, the Office of Personnel Management issued a letter on June 23, 2015, to health insurance carriers participating in the Federal Employees Health Benefits Program indicating that ''no [such] carrier may have a general exclusion of services, drugs or supplies related to gender transition or 'sex transformations.' '' [90] Additionally, a significant number of public and private employers are offering coverage to employees that includes coverage for transition-related services.[91]

OCR proposes to apply basic nondiscrimination principles in evaluating whether a covered entity's denial of a claim for coverage of treatment related to transition-related care is the product of discrimination. Based on these principles, an explicit, categorical (or automatic) exclusion of coverage for all health services related to gender transition is unlawful on its face under paragraph (b)(4); in singling out the entire category of services and treatments for transition-related care, such an exclusion systematically denies services and treatments for transgender individuals and is prohibited discrimination on the basis of sex.

Moreover, we propose in § 92.207(b)(5) to bar a covered entity from denying or limiting coverage, or denying a claim for coverage, for specific health services related to gender transition where such a denial or limitation results in discrimination against a transgender individual. In evaluating whether it is discriminatory to deny or limit a request for coverage of a particular service for an individual seeking the service as part of transition-related care, OCR will start by inquiring whether and to what extent coverage is available when the same service is not related to gender transition. If, for example, a health plan or State Medicaid agency denies a claim for coverage of a hysterectomy that a patient's provider says is medically necessary to treat gender dysphoria, OCR will evaluate the extent of the plan's coverage of hysterectomies under other circumstances. OCR will also carefully scrutinize whether the covered entity's explanation for the denial or limitation of coverage for transition-related care is legitimate and not a pretext for discrimination.

These provisions do not, however, affirmatively require covered entities to cover any particular procedure or treatment for transition-related care; nor do they preclude a covered entity from applying neutral standards that govern the circumstances in which it will offer coverage to all its enrollees in a nondiscriminatory manner.

We invite comment as to whether the approach of § 92.207(b)(1)–(5) is over or under inclusive of the types of potentially discriminatory claim denials experienced by transgender individuals in their attempts to access coverage and care, as well as on how nondiscrimination principles apply in this context.

Paragraph (c) of § 92.207 provides that the enumeration of specific forms of discrimination in paragraph (b) does not limit the general applicability of the prohibition in paragraph (a) of this section. Paragraph (d) of the proposed rule provides that nothing in § 92.207 is intended to determine, or restrict a covered entity from determining, whether a particular health care service is medically necessary or otherwise meets applicable coverage requirements in any individual case.

Employer Liability for Discrimination in Employee Health Benefit Programs (§ 92.208)

Proposed Section 92.208 addresses the application of Section 1557 to employers that offer health benefit programs to their employees. Under our proposed approach, where an entity that receives Federal financial assistance provides an employee health benefit program to its employees, it will be liable for discrimination in that employee health benefit program under this part only in the following circumstances:

(a) The entity is principally engaged in providing or administering health services or health insurance coverage;

(b) The entity receives Federal financial assistance the primary objective of which is to fund the entity's employee health benefit program; or

(c) The entity is not principally engaged in providing or administering health services or health insurance coverage but operates a health program or activity (which is not an employee health benefit program) that receives Federal financial assistance; except that in such cases, the entity is accountable under this part with regard to the provision or administration of employee health benefits only to the employees in that health program or activity.

Under § 92.208(a) of the proposed rule, where an employer is principally engaged in providing or administering health services or health coverage and receives Federal financial assistance, the employer will be subject to Section 1557 in its provision or administration of employee health benefit programs to its employees. Thus, if a hospital provides health benefits to its employees, it will be covered by Section 1557 not only for the services it offers to its patients or other beneficiaries but also for the health benefits it provides to its employees.[92]

Under proposed § 92.208(b), where an entity receives Federal financial assistance the primary objective of which is to fund an employee health benefit program, that entity's provision or administration of the health benefit program will be covered by Section 1557 regardless of the business in which the entity is engaged. Where, for example, an entity receives Federal financial assistance that is specifically designated to support its employee wellness program, this part will apply to the entity's administration of that wellness program.

Proposed § 92.208(c) seeks to clarify that an employer that is not principally

[84] New York State Department of Financial Services. (2014). Insurance Circular Letter No. 7, *available at http://www.dfs.ny.gov/insurance/circltr/2014/cl2014_07.pdf.*

[85] Oregon Department of Consumer and Business Services. (2012). Insurance Division Bulletin INS 2012–1, *available at http://www.oregon.gov/DCBS/insurance/legal/bulletins/Documents/bulletin2012-01.pdf.*

[86] Vermont Department of Financial Regulation. (2014). Division of Insurance Bulletin No. 174, *available at http://www.dfr.vermont.gov/sites/default/files/Bulletin_174.pdf.*

[87] Washington Office of Insurance Commissioner. (2014). Letter to Health Insurance Carriers in Washington State, *available at http://www.insurance.wa.gov/about-oic/newsroom/news/2014/documents/gender-identity-discrimination-letter.pdf.*

[88] District of Columbia Department of Insurance, Securities, and Banking. (2014). Bulletin 13–IB–01–30/15 (Revised), *available at http://www.insurance.wa.gov/about-oic/newsroom/news/2014/documents/gender-identity-discrimination-letter.pdf.*

[89] *http://www.transhealthcare.org/states-that-have-banned-anti-transgender-discrimination-in-health-insurance/.*

[90] U.S. Office of Personnel Management. FEHB Program Carrier Letter, Letter No. 2015–12 (Jun. 23, 2015), *available at http://transequality.org/sites/default/files/images/blog/FEHB%20CL%202015-12%20Covered%20Benefits%20for%20Gender%20Transition%20Services.pdf.*

[91] Kellan Baker & Andrew Cray, Center for American Progress, FAQ: Health Insurance Needs for Transgender Americans (Oct. 12, 2013), *available at http://www.americanprogress.org/issues/lgbt/report/2012/10/03/40334/faq-health-insurance-needs-for-transgender-americans/.*

[92] This approach is consistent with the basic principle underlying the proposed rule and derived from longstanding civil rights interpretations: where an entity that receives Federal financial assistance is principally engaged in providing or administering health services or health insurance coverage, all of its operations will be covered by Section 1557.

engaged in providing or administering health services or health insurance coverage, but that operates a health program or activity (that is not an employee health benefit program) that receives Federal financial assistance will be covered by this part for its provision or administration of an employee health benefit program, but only with regard to employees in the health program or activity. Thus, when a State receives Federal financial assistance for its Medicaid program, the State is governed by Section 1557 in the provision of employee health benefits for its Medicaid employees, but not for its transportation department employees, assuming no part of the State transportation department operates a health program or activity.

In summary, unless the primary purpose of the Federal financial assistance is to fund employee health benefits, we propose to not apply Section 1557 to an employer's provision of employee health benefits where the provision of those benefits is the only health program or activity operated by the employer. If, for example, a community organization that exclusively offers a legal clinic receives Federal financial assistance, and the organization uses grant funds to support personnel costs, including employee health benefits, Section 1557 would not apply to the organization's provision of employee health benefits.[93]

Absent the limitations this rule proposes in § 92.208, employers that receive Federal financial assistance for any purpose could be held liable for discrimination in the employee health benefit programs they provide or administer, where those employers are not otherwise engaged in a health program or activity and where the use of Federal funds for employee health benefits is merely incidental to the purpose of the assistance. We believe that claims of discrimination in such benefits, brought against employers that do not operate other health programs or activities, are better addressed under other applicable laws.

We propose to apply the same analysis of employer liability under Section 1557 whether the employee health benefit program is self-insured or fully-insured by the employer. Where an employer that would otherwise be covered under this section creates a separate legal entity to administer its employee health benefit plan, the employer continues to be liable for the nondiscriminatory provision of employee health benefits to its employees; the employer, as a recipient, may not, through contractual or other arrangements, discriminate on a prohibited basis against its employees.[94]

Nondiscrimination on the Basis of Association (§ 92.209)

Section 92.209 of the proposed rule specifically addresses discrimination faced by an individual or an entity on the basis of the race, color, national origin, age, disability, or sex of an individual with whom the individual or entity is known or is believed to have a relationship or association. The language of Section 1557 makes clear that individuals may not be subject to any form of discrimination ''on the grounds prohibited by'' Title VI and other civil rights laws; the statute does not restrict that prohibition to discrimination based on the individual's *own* race, color, national origin, age, disability or sex. Further, a prohibition on associational discrimination is consistent with longstanding interpretations of existing civil rights laws that prohibit discrimination on identified bases, whether the basis is a characteristic of the harmed individual or an individual who is associated with the harmed individual.[95] A prohibition on associational discrimination is also consistent with the approach taken in the ADA, which includes a specific prohibition of discrimination based on association with an individual with a disability.[96]

Associational discrimination prohibited by this rule can arise in multiple contexts. For example, a primary care physician could not refuse to accept a new patient because the physician disapproves of this individual's family relationships; *i.e.,* because of the race, color, national origin, age, sex, or disability-status of one or more of the patient's family members. This refusal is impermissible associational discrimination because it is on grounds prohibited by Section 1557. That is, if the patient's family member(s) was not of a particular race, color, national origin, age, sex, or disability-status, the individual would have been accepted as a new patient.

Similarly, a physician could not deny a medical appointment to a patient who is an individual without a disability on the basis that the patient will be accompanied by a family member who is deaf and who will require a sign language interpreter; § 92.202 of this proposed rule requires effective communication with individuals with disabilities, including companions with disabilities, and denying an appointment based on the patient's association with an individual with a disability who needs an interpreter thus would constitute associational discrimination based on disability.[97]

Subpart D—Procedures

Enforcement Mechanisms (§ 92.301)

This proposed section restates the language of Section 1557 regarding enforcement, which provides that the enforcement mechanisms under Title VI, Title IX, the Age Act, or Section 504 apply for violations of Section 1557. These existing enforcement mechanisms include requiring covered entities to

[93] Health insurance issuers whose products are offered by an employer through its employee health benefit plans would continue to be covered under the standards set forth in Section 92.207: where an issuer receives Federal financial assistance, its operation of all of its health plans, whether offered through the Marketplace, the individual or group health insurance markets, or employee benefit plans, will be covered under this part. This analysis is independent of the analysis in proposed Section 92.208 of the employer's liability for discrimination in the employee benefit plans that it sponsors.

[94] With regard to the liability of the legal entity that an employer creates to administer its employee benefit plan, by contrast, we propose to analyze questions related to the application of Section 1557 to the issuer or group health plan on a case by case basis consistent with longstanding principles of nondiscrimination law. We will ask, for example, whether the plan itself receives Federal financial assistance, such as through receipt of Medicare Part D payments. If it does not, we will evaluate the plan's relationship with the employer in assessing whether Section 1557 applies to the plan.

[95] *See McGinest* v. *GTE Service Corp.,* 360 F. 3d 1103, 1118 (9th Cir. 2004) (case involving indirect comments in the workplace that crossed racial lines, noting that ''Title VII has . . . been held to protect against adverse employment actions taken because of the employee's close association with black friends or coworkers'') (internal citations omitted); *Tetro* v. *Elliot Popham Pontiac, Oldsmobile, Buick & GMC Trucks Inc.,* 173 F.3d 988, 994–95 (6th Cir. 1999) (holding that white plaintiff with biracial child stated a claim under Title VII based on his own race ''even though the root animus for the discrimination is a prejudice against the biracial child''); *Parr* v. *Woodmen of the World Life Ins.,* 791 F.2d 888, 892 (11th Cir. 1986) (''Where a plaintiff claims discrimination based upon an interracial marriage or association, he alleges by definition that he has been discriminated against because of his race.''); Arceneaux v. Vanderbilt University, 25 Fed. Appx. 345 (6th Cir. 2001) (unpub'd) (treating sex discrimination as associational discrimination).

[96] 42 U.S.C. 12182(b)(1)(E). *See also Loeffler* v. *Staten Island Univ. Hosp.,* 582 F.3d 268, 279 (2d Cir. 2009) (permitting associational discrimination claim under Section 504); *Falls* v. *Prince George's Hosp. Ctr.,* No. 97–1545, 1999 U.S. Dist. LEXIS 22551 (D. Md.1999) (holding that parent had an associational discrimination claim under Title III of the ADA because hospital directly discriminated against parent by requiring hearing parent to act as interpreter for child who was deaf). *See generally http://www.eeoc.gov/facts/association_ada.html.*

[97] Thus, pursuant to § 92.202, when a patient's companion, such as a family member or friend, is an appropriate person with whom the provider should communicate under the circumstances, the provider must provide auxiliary aids and services to a deaf or hard of hearing companion to ensure that communication with that individual is as effective as it would be with a companion who is not deaf or hard of hearing.

keep records and submit compliance reports to OCR, conducting compliance reviews and complaint investigations, and providing technical assistance and guidance. Where noncompliance or threatened noncompliance cannot be corrected by informal means, the enforcement mechanisms provided for and available under the civil rights laws referenced in Section 1557 include suspension of, termination of, or refusal to grant or continue Federal financial assistance; referral to the Department of Justice with a recommendation to bring proceedings to enforce any rights of the United States; and any other means authorized by law.[98] In addition, based on the statutory language, a private right of action and damages for violations of Section 1557 are available to the same extent that such enforcement mechanisms are provided for and available under Title VI, Title IX, Section 504, or the Age Act with respect to recipients of Federal financial assistance. A private right of action and damages are also available for violations of Section 1557 by Title I entities. We seek comment on these positions.

Procedures for Health Programs and Activities Conducted by Recipients and State-Based Marketplaces (§ 92.302)

Proposed § 92.302 specifies the regulatory procedures that will apply to claims under Section 1557 for health programs and activities conducted by recipients and State-based Marketplaces. The administrative procedures provided for and available under Title VI are found in the regulation implementing Title VI, at 45 CFR 80.6–80.11 and 45 CFR part 81. These administrative procedures are incorporated into the regulation implementing Title IX at 45 CFR 86.71 and the regulation implementing Section 504 with respect to recipients at 45 CFR 84.61. Section 92.302(a) incorporates these procedures into the proposed rule with respect to race, color, national origin, sex, and disability discrimination. The administrative procedures provided for and available under the Age Act are found in the regulation implementing the Age Act at 45 CFR 91.41 through 91.50. Section 92.302(b) incorporates these procedures into the proposed rule with respect to age discrimination.

Section 92.302(c) also provides that an individual may bring a civil action in a United States District Court in which a recipient or State-based Marketplace is located, as provided for and available under Section 1557.

[98] See 45 CFR 80.8(a).

Procedures for Health Programs and Activities Administered by the Department (§ 92.303)

As noted, Section 1557 expressly states that the enforcement mechanisms provided for and available under Title VI, Title IX, Section 504, or the Age Act shall apply for purposes of violations of Section 1557. The administrative procedures provided for and available under Section 504—which is the only one of these statutes that applies to Federally conducted, as well as Federally assisted, programs—for programs and activities administered by the Department are found in the regulation implementing Section 504 at 45 CFR 85.61 and 85.62. These procedures shall apply with respect to complaints and compliance reviews of health programs or activities administered by the Department, including the Federally-facilitated Marketplaces, concerning discrimination on the basis of race, color, national origin, sex, age, or disability.

The proposed rule adds two provisions that are not found in 45 CFR 85.61 and 85.62. The first provision relates to OCR's access to information. This provision, which is in accordance with OCR's practice under Section 504, is designed to ensure that OCR has the ability to obtain all of the relevant information needed to investigate a complaint or determine compliance in a particular health program or activity administered by the Department, and mirrors similar requirements for recipients under the Title VI regulation.

The second provision prohibits the Department, including the Federally-facilitated Marketplaces, from retaliating against any individual for the purpose of interfering with any right or privilege under Section 1557 or the proposed rule or because the individual has made a complaint, testified, assisted, or participated in any manner in an investigation, proceeding, or hearing under Section 1557 or this proposed rule. Section 504 of the Rehabilitation Act, to which the Department is already subject, provides that the procedures, rights, and remedies under Title VI are available to any individual aggrieved by an act or failure to act by any recipient of Federal financial assistance or Federal provider of such financial assistance under Section 504. Thus, the prohibition of retaliation under Title VI applies to the Department under Section 504. The retaliation provision in the proposed rule is simply an extension of this existing prohibition. This provision is also in accordance with a similar requirement for recipients under the Title VI regulation at 45 CFR 80.7(e); the Department should hold itself to the same standards to which it holds recipients of Federal financial assistance.[99]

Information Collection Requirements

This notice of proposed rulemaking would call for new collections of information under the Paperwork Reduction Act of 1995 (44 U.S.C. 3501–3520). As defined in 5 CFR 1320.3(c), ''collection of information'' comprises reporting, recordkeeping, monitoring, posting, labeling and other similar actions. The title and description of those entities that must collect the information and an estimate of the total annual burden follow. The estimate covers the time for reviewing and posting the collections required.

Title: Notice on Nondiscrimination in Health Programs and Activities.

OMB Control Number: XXXX–XXXX.

Summary of the Collection of Information: Under the proposed rule, each entity applying for Federal financial assistance, each health insurance issuer seeking certification to participate in a Marketplace, and each entity seeking approval to operate a Title I entity would be required to submit an assurance that its health programs and activities will be operated in compliance with Section 1557 of the Affordable Care Act (ACA).

In addition, each covered entity subject to the proposed rule would be required to post a notice of certain important information, including that the covered entity provides auxiliary aids and services, free of charge, in a timely manner, to individuals with disabilities, when such aids and services are necessary to provide an individual with a disability an equal opportunity to benefit from the entity's health programs or activities; and language assistance services, free of charge, in a timely manner, to individuals with limited English proficiency, when those services are necessary to provide an individual with limited English proficiency meaningful access to a covered entity's health programs or activities. Furthermore, each covered entity would be required to post taglines in the top 15 languages spoken by individuals with limited English proficiency nationally,

[99] Further, as the U.S. Supreme Court observed in *Jackson* v. *Birmingham Bd. of Educ.,* 544 U.S. 167, 181 (2005), ''providing individual citizens effective protection against discriminatory practices . . . would be difficult, if not impossible, to achieve if persons who complain about sex discrimination did not have effective protection against retaliation'' (internal citations omitted). The same principle is true for discrimination under Section 1557.

informing individuals with limited English proficiency that language assistance services may be available.

Additionally, each covered entity that employs 15 or more persons would be required to adopt grievance procedures that incorporate appropriate due process standards and that provide for the prompt and equitable resolution of grievances alleging any action that would be prohibited by Section 1557. Each such entity would also be required to designate at least one individual to coordinate its efforts to comply with and carry out its responsibilities under Section 1557, including the investigation of any grievance communicated to it alleging noncompliance with Section 1557.

Need for Information: The requirement that every entity applying for Federal financial assistance, seeking certification to participate in a Health Insurance Marketplace, or seeking approval to operate a Title I entity, submit an assurance of compliance, is similar to the current regulatory requirements under 45 CFR 80.4(a), 84.5 and 91.33. These requirements protect individuals by assuring that covered entities will comply with all applicable nondiscrimination statutes and their implementing regulations.

The posting of a notice of certain important information and the posting of taglines in the top 15 languages spoken by individuals with limited English proficiency nationally are necessary to ensure that individuals are aware of their protections under the law, and are grounded in OCR's experience that failures of communication based on the absence of auxiliary aids and services and language assistance services raise particularly significant compliance concerns under Section 1557, as well as Section 504 and Title VI.

The requirements that every covered entity that employs 15 or more persons adopt a grievance procedure and designate at least one individual to coordinate its efforts to comply with and carry out its responsibilities under Section 1557 are similar to requirements included in the Title IX and Section 504 implementing regulations. Through its case investigation experience, OCR has observed that the presence of a coordinator and grievance procedure helps to bring concerns to prompt resolution within an entity, leading to lower compliance costs and more efficient outcomes.

Proposed Use of Information: OCR would use this information to ensure covered entities' adherence to the statutory requirements imposed under Section 1557 and this proposed rule. OCR would enforce the requirements by verifying during investigations of covered entities that an entity has submitted an assurance of compliance, posted the notice of important information and taglines and, for each covered entity that employs 15 or more persons, that an individual has been designated to coordinate its compliance efforts and that appropriate grievance procedures have been adopted, as required.

Description of the Respondents: The respondents are each entity applying for Federal financial assistance, each issuer seeking certification to participate in a Marketplace, and each entity seeking approval to operate a Title I entity. These include such entities as hospitals, home health agencies, community mental health centers, skilled nursing facilities, and health insurance issuers.

Number of Respondents: The number of respondents is estimated to include the 278,565 covered entities affected by the proposed rule.

Burden of Response: Because the proposed rule would provide a model assurance of compliance, a model notice of important information, and model taglines in the top 15 languages, the burden on respondents is minimal. Additionally, because all recipients of Federal financial assistance with 15 or more employees are already expected to have in place a grievance procedure and a designated individual to coordinate their compliance responsibilities, the burden to comply with this requirement will be minimal for most respondents.

While the requirement to submit an assurance of compliance is subject to the Paperwork Reduction Act (PRA), OCR believes the burden associated with this requirement is exempt from the PRA in accordance with 5 CFR 1320.3(b)(2). OCR believes that the time, effort, and financial resources necessary to comply with this requirement should be considered a usual and customary business practice and would be incurred by covered entities during their ordinary course of business.

OCR estimates the burden for responding to the proposed notice requirement would be 17 minutes to download/print and post the notice of important information and that the burden to download/print and post taglines in the top 15 languages nationally would also be 17 minutes, for a burden total of 34 minutes. We estimate that administrative or clerical support personnel would perform these functions. Based on the wage rate for a Clerical Support Worker ($22.94) we estimate the annual burden cost for these two requirements to be approximately $4.8 million.

Regarding the requirement that every covered entity that employs 15 or more persons adopt grievance procedures and designate at least one individual to coordinate its efforts to comply with and carry out its responsibilities under Section 1557, based on OCR's compliant workload increase since the passage of Section 1557, we anticipate that within the first five years following the rule's enactment, complaints will increase approximately 1%, but eventually will drop off as covered entities modify their policies and practices in response to the proposed rule. We estimate that medical and health service managers would handle the grievances. Taking 1% of the annual wage rate for medical and health service managers ($101,340) and increasing that amount by 100% to account for fringe benefits and overhead, we estimate the total annual burden cost for this requirement to be approximately $118.7 million.

Thus, the total estimated annual burden cost for the proposed information collection requirements will be approximately $123.5 million.

We ask for public comment on the proposed information collection to help us determine:

1. Whether the proposed collection of information is necessary for the proper performance of the functions of OCR, including whether the information will have practical utility;
2. The accuracy of the estimated burden associated with the proposed collection of information;
3. How the quality, utility, and clarity of the information to be collected may be enhanced; and
4. How the burden of complying with the proposed collection of information may be minimized, including through the application of automated collection techniques or other forms of information technology.

Comments regarding the collection of information proposed in this rule must refer to the proposed rule by name and docket number and must be submitted to both OMB and the Docket Management Facility where indicated under **ADDRESSES**, by the date specified under **DATES**.

Regulatory Impact Analysis

I. Introduction

A. Executive Orders 12866 and 13563

Executive Order 12866 [100] directs agencies to assess all costs and benefits of available regulatory alternatives and, if regulation is necessary, to select regulatory approaches that maximize net benefits (including potential

[100] E.O. 12866, 58 FR 51735 (1993).

economic, environmental, public health and safety effects; distributive impacts; and equity). Executive Order 13563 [101] is supplemental to and reaffirms the principles, structures, and definitions governing regulatory review as established in Executive Order 12866. The Office of Management and Budget (OMB) has determined that this proposed rule is a ''significant regulatory action'' under Executive Order 12866. Accordingly, OMB reviewed this proposed rule.

B. The Need for a Regulation

Section 1557 of the ACA prohibits an individual from being excluded from participation in, denied the benefits of, or otherwise subjected to discrimination on the basis of race, color, national origin, sex, age or disability in certain health programs and activities. It applies the protections available under Title VI, Title IX, the Age Act, and Section 504 to any health program or activity, any part of which is receiving Federal financial assistance, and to any program or activity that is administered by an Executive Agency or any entity established under Title I of the ACA.[102] Under this section, the Secretary of the Department is authorized to promulgate regulations to implement Section 1557. The purpose of this regulatory action is to implement Section 1557 of the ACA.

One of the central aims of the ACA is to expand access to health care and health coverage for all individuals. Equal access for all individuals without discrimination is essential to achieving this goal. Discrimination in the health care context can often lead to poor and inadequate health care or health insurance or other coverage for individuals and exacerbate existing health disparities in underserved communities. Individuals who have experienced discrimination in the health care context often postpone or do not seek needed health care; individuals who are subject to discrimination are denied opportunities to obtain health care services provided to others, with resulting adverse effects on their health status. Moreover, discrimination in health care can lead to poor and ineffective distribution of health care resources, as needed resources fail to reach many who need them. The result is a marketplace comprised of higher medical costs due to delayed treatment, lost wages, lost productivity, and the misuse of people's talent and energy.[103]

To help address these issues, this regulation seeks to clarify the application of the nondiscrimination provision in the ACA to any health program or activity receiving Federal financial assistance or administered by HHS or any entity established under Title I. Such clarity will promote understanding of and compliance with Section 1557 by covered entities and the ability of individuals to assert and protect their rights under the law.

In addition, Executive Order 13563 directs Federal agencies to improve regulations and regulatory review by promoting the simplification and harmonization of regulations and to ensure that regulations are accessible, consistent and easy to understand. Regulations implementing the civil rights laws referenced in Section 1557 contain certain inconsistencies across common areas and subject matters, reflecting, among other things, differences in time and experience when the regulations were issued. The approach taken in the proposed rule is to simplify and make uniform, consistent, and easy to understand the various nondiscrimination requirements and rights available under Section 1557, as appropriate.

C. Examples of Covered Entities and Health Programs or Activities Under the Proposed Regulation

This proposed rule would apply to any entity that has a health program or activity, any part of which receives Federal financial assistance from the Department, any health program or activity administered by the Department, or any health program or activity administered by an entity created under Title I of the ACA. The following are examples of covered entities as well as health programs or activities under the proposed rule.

1. Examples of Covered Entities With a Health Program or Activity, Any Part of Which Receives Federal Financial Assistance From the Department

This Department, through agencies such as the Health Resources and Services Administration (HRSA), the Substance Abuse and Mental Health Services Administration (SAMHSA), the Centers for Disease Control and Prevention (CDC), and the Centers for Medicare & Medicaid Services (CMS), provides Federal financial assistance through various mechanisms to health programs and activities of local governments, State governments, and the private sector. An entity may receive Federal financial assistance from more than one component in the Department. For instance, Federally qualified health centers receive Federal financial assistance from CMS by participating in the Medicare or Medicaid programs and also receive Federal financial assistance from HRSA through grant awards. Because more than one funding stream may provide Federal financial assistance to an entity, the examples we provide may not uniquely receive Federal financial assistance from only one HHS component.

(1) Entities receiving Federal financial assistance through their participation in Medicare or Medicaid (about 133,343 facilities).[104] Examples of these entities include:

- Hospitals (includes short-term, rehabilitation, psychiatric, and long-term)
- Skilled nursing facilities/nursing facilities–facility-based
- Skilled nursing facilities/nursing facilities—freestanding
- Home health agencies
- Physical therapy/speech pathology programs
- End stage renal disease dialysis centers
- Intermediate care facilities for individuals with intellectual disabilities
- Rural health clinics
- Physical therapy—independent practice
- Comprehensive outpatient rehabilitation facilities
- Ambulatory surgical centers
- Hospices
- Organ procurement organizations
- Community mental health centers
- Federally qualified health centers

(2) Laboratories that are hospital-based, office-based, or freestanding that receive Federal financial assistance through Medicare or Medicaid payments for covered laboratory tests (about 445,657 laboratories with Clinical Laboratory Improvement Act certification).

(3) Community health centers receiving Federal financial assistance

[101] E.O. 13563, 76 FR 3821 (2011).

[102] Patient Protection and Affordable Care Act, Pub. L. 111–148 (2010) (codified at 42 U.S.C. 18116).

[103] Kristen Suthers, American Public Health Association: Issue Brief: Evaluating the Economic Causes and Consequences of Racial and Health Disparities (2008), *available at http://hospitals.unm.edu/dei/documents/eval_cause_conse_apha.pdf*. Carol Rose DeLilly and Jacquelyn H. Flaskerud, Discrimination and Health Outcomes, 33(11), Issues Ment. Health Nurs., 801–804 (2012), *available at http://informahealthcare.com/doi/abs/10.3109/01612840.2012.671442*; Timothy Waldmann, Urban Institute, Estimating the Cost of Racial and Ethnic Health Disparities (2009), *available at http://www.urban.org/research/publication/estimating-cost-racial-and-ethnic-health-disparities*; LaVera M. Crawley, David K. Ahn, and Marilyn A. Winkleby, Perceived Medical Discrimination and Cancer Screening Behaviors of Racial and Ethnic Minority Adults, 17(8), Cancer Epidemiol Biomarkers Prev., 1937–1944 (2008), *available at http://www.ncbi.nlm.nih.gov/pmc/articles/PMC2526181/*.

[104] CMS Provider of Service file for June 2014.

through grant awards from HRSA (1,200 community health centers).[105]

(4) Health-related schools in the United States and other health education entities receiving Federal financial assistance through grant awards to support 40 health professional training programs that include oral health, behavioral health, medicine, geriatric, and physician's assistant programs (171 health-related schools and other health education entities).[106]

(5) State Medicaid agencies receiving Federal financial assistance from CMS to operate Medicaid and CHIP programs (includes every State, the District of Columbia, Puerto Rico, Guam, the Northern Marianas, U.S. Virgin Islands, and American Samoa).

(6) State public health agencies receiving Federal financial assistance from CDC, SAMHSA, and other HHS components (includes each State, the District of Columbia, Puerto Rico, Guam, the Northern Marianas, U.S. Virgin Islands, and American Samoa).

(7) Qualified health plan issuers receiving Federal financial assistance through premium tax credits or cost-sharing reductions (which include at least the 169 health insurance issuers receiving Federal financial assistance through premium tax credits and cost sharing reductions and at least 11 issuers operating in the State Based Marketplaces that we were able to identify).[107] We seek comment on identifying additional issuers in the State-based Marketplaces.

(8) Physicians receiving Federal financial assistance through Medicaid payments, ''meaningful use'' payments, and other sources, but not Medicare Part B payments, as the Department does not consider Medicare Part B payments to physicians to be Federal financial assistance.

In regard to the eighth category of entities that may be covered by this proposed rule—physicians—we estimate that this proposed rule likely covers almost all licensed physicians because they accept Federal financial assistance from sources other than Medicare Part B. Most physicians participate in more than one Federal, State, and local health program that receives Federal financial assistance, and many practice in several different settings, *e.g.,* they may practice in a hospital but also practice privately and develop nursing home plans of care at the local nursing home. We have data, by program, for the number of physicians receiving payment from each program, but there is no single, unduplicated count of physicians across programs. We can compare the various counts of physicians with the number of all licensed and practicing physicians in the United States as enumerated in the Area Health Resource File maintained by HRSA, but even this benchmark file may contain duplicate counts of licensed physicians as explained later in the analysis.

In spite of the difficulty in obtaining an unduplicated physician count, we provide our best estimate of the number of physicians receiving Federal financial assistance by analyzing and comparing different data sources and drawing conclusions from this analysis. Based on 2010 Medicaid Statistical Information System data (the latest available), about 614,000 physicians accept Medicaid payments and are covered under Section 1557 as a result.[108] This figure represents about 69% of licensed physicians in the United States when compared to the 890,000 licensed physicians reported in the Area Health Resource File. In addition, physicians receiving Federal payments from non-Part B Medicare sources will also come under Section 1557. For example, as of January 2014, 296,500 Medicare-eligible professionals had applied for funds to support their ''meaningful use'' technology efforts.[109] Adding the 614,000 physicians who receive Medicaid payments to the 296,500 physicians who receive meaningful use payments yields over 900,000 physicians potentially reached by Section 1557 because they participate in Federal programs other than Part B of Medicare. Because physicians can receive both Medicaid and meaningful use payments, and these figures are not adjusted for duplication, the 900,000 result is probably best interpreted as an upper bound.

Earlier, we identified several grant programs from various Department agencies that fund a variety of health care programs in which physicians participate and thus come under Section 1557, such as the National Health Service Corps, HRSA-funded community health centers, programs receiving NIH research grants, and SAMHSA-funded programs. Furthermore, physicians participating in a CMS gain-sharing demonstration project who receive gain-sharing payments would be covered under Section 1557 even if they did not participate in Medicare and Medicaid or any other health program or activity that receives Federal financial assistance. Again, there will be duplication and overlap with physicians who accept Medicaid or Medicare meaningful use payments, or other payments apart from Medicare Part B payments. Nevertheless, at least some of these physicians add to the total number of physicians reached under Section 1557 because some of them are not duplicates and do not accept Medicaid or Medicare meaningful use payments. We do not have an exact number, but adding these physicians may bring the total participating in Federal programs other than Part B to over 900,000.

When we compare the upper bound estimated number of physicians participating in Federal programs other than Medicare Part B (over 900,000) to the number of licensed physicians counted in HRSA's Area Health Resource File (approximately 890,000), we conclude that almost all practicing physicians in the United States are reached by Section 1557 because they accept some form of Federal remuneration or reimbursement apart from Medicare Part B.[110] We invite the public to submit information regarding physician participation in health programs and activities that receive Federal financial assistance.

2. Examples of Health Programs or Activities Conducted by the Department

This proposed rule applies to the Department's health programs and activities, such as those administered by CMS, HRSA, CDC, IHS, and SAMHSA. Examples include the Indian Health Service tribal hospitals and clinics operated by the Department (about 876 hospitals and clinics) and the National Health Service Corps.[111]

[105] U.S. Department of Health and Hunan Services, HRSA: Justification of Estimates for Appropriation Committee, 42 (2014).

[106] *Id.* at .16.

[107] Qualified Health Plans Landscape Individual Market Medical (2015), *available at https://data.healthcare.gov/dataset/2015-QHP-Landscape-Individual-Market-Medical/mp8z-jtg7.*

[108] John Holahan and Irene Headen, Kaiser Commission on Medicaid and the Uninsured, *Medicaid Coverage and Spending in Health Reform: National and State-by-State Results for Adults at or Below 133% FPL* (2010), *available at http://kff.org/health-reform/report/report-and-briefing-on-medicaid-coverage-and/.* Estimates are based on data from FY 2010 MSIS.

[109] Mynti Hossain and Marsha Gold, Mathematical Policy Research Inc.: Prepared for The Office of the National Coordinator for Health Information Technology, U.S. Department of Health and Human Services, *Monitoring National Implementation of HITECH: Status and Key Activity Quarterly Summary,* (January to March 2014), *available at http://www.healthit.gov/sites/default/files/globalevaluationquarterlyreport_january-march2014.pdf.*

[110] The Area Health Resource File itself double counts physicians who are licensed in more than one state. See *infra* discussion below at II.C.1.a.

[111] *Id.* at 66.

3. Examples of Entities Established Under Title I of the ACA

This proposed rule applies to entities established under Title I of the ACA. According to the CMS Center for Consumer Information and Insurance Oversight (CCIIO), there are Health Insurance Marketplaces covering 51 jurisdictions: (14 State-based-Marketplaces and 37 Federally-facilitated Marketplaces).[112] The proposed rule covers these Health Insurance Marketplaces.

II. Costs

As discussed above, it is important to recognize that the NPRM—except in the area of sex discrimination—applies pre-existing requirements in Federal civil rights laws to various entities, nearly all of which have been covered by these requirements for many years. Because the NPRM restates existing requirements, we do not anticipate that covered entities will undertake new actions or bear any additional costs in response to the issuance of the regulation with respect to the prohibition of race, color, national origin, age, or disability discrimination.

However, the prohibition of sex discrimination is new for many of the covered entities, and we do anticipate that the enactment of the regulation will result in changes in action and behavior by covered entities to comply with this new prohibition. Some of these actions will impose costs and others will not.

In addition, as noted above, Section 1557 applies to the Health Insurance Marketplaces, as entities newly created under Title I of the ACA. However, these entities, along with the qualified health plans issuers participating in the Health Insurance Marketplaces, are already covered by regulations issued by CMS that prohibit discrimination on the basis of race, color, national origin, sex, including sex stereotyping and gender identity, sexual orientation, age, or disability, and the Federally-facilitated Marketplaces are already covered by Section 504, which prohibits disability discrimination. Thus the impact of Section 1557 on these entities is limited.

The following regulatory analysis examines the costs and benefits that are attributable to this regulation only. While we make assumptions about possible behavioral responses to the regulation, we acknowledge that more information may be available to inform these assumptions and we welcome comment.

We first analyze the costs we expect the proposed rule to create for covered entities. Then we examine the potential benefits the rule is likely to produce. In the subsequent analyses of costs in this RIA and the Regulatory Flexibility Act (RFA), we use data sets from the Census Bureau and Bureau of Labor Statistics for estimating burdens.[113]

A. Assumptions

The following cost assessment rests on certain key assumptions that include: (1) Voluntary activity on the part of covered entities that is triggered by the enactment of this regulation—and that would not have occurred absent the enactment of the regulation—which generates both costs and corresponding benefits; (2) to the extent that actions are required under the proposed rule where the same actions are already required by prior existing civil rights regulations, we assume that the actions are already taking place and thus that they are not a burden imposed by the proposed rule; (3) although the regulation does not require training at any time, we anticipate that covered entities may voluntarily provide one-time training to some employees on the requirements of the regulation at the time that the regulation is published; and (4) employers are most likely to train employees who interact with the public. Based on this assumption, we also assume employers likely will train between 40 and 60% of their employees, as the percentage of employees that interact with patients and the public varies by covered entity. For purposes of the analysis, we assume that 50% of the covered entity's staff will receive one-time training on the requirements of the regulation. We use the 50% estimate as a proxy, given the lack of certain information as described below. For the purposes of the analysis, we do not distinguish between employees whom covered entities will train and those who obtain training independently of a covered entity.

B. Training

We assume covered entities will provide some workers a one-time awareness or familiarization training regarding the requirements in the regulation at the time of its issuance. We are counting the cost of training on all aspects of the regulation, not only on the new responsibilities under the regulation, as we believe covered entities will want to offer comprehensive training to employees, recognizing that refresher training can provide value. We invite comment on whether we should count only the cost of training on new responsibilities under the regulation.

We know that many employees work ''behind the scenes'' at large entities, and may not have contact with patients or the general public or otherwise have duties impacted by the requirements we are proposing and therefore may have little need for training. However, we are uncertain which employees those are. Furthermore, we do not know whether an entity rotates employees into different positions that may have patient contact or relevant duties, or whether, over time, an employee will switch to a position that places him or her in such a position, which may create a need for training.

We also lack information on State and local regulations that may require employees to receive training on civil rights provisions and whether those provisions are more or less rigorous than the ones we propose. Thus, workers in covered entities in States and local jurisdictions with civil rights provisions more robust than the ones we propose may need only minimal training. In State and local jurisdictions where civil rights provisions are not more robust, workers may need more training. As stated above, because we lack data on covered entities' training practices we are assuming that covered entities will voluntarily provide training on the final rule for between 40% and 60% of their staffs.

We welcome public comment and information that will help us focus our analyses on the specific entities and workers who likely will receive training.

In the following section, we identify the pool of workers and staff that we anticipate may need knowledge of the proposed rule. Next, we identify the covered entities that may choose to train their staffs to provide this knowledge. Last, we estimate the costs of presenting the training materials and the worker time that will be spent in training.

[112] 45 CFR part 155 sets forth the Exchange Establishment Standards that a State-based Marketplace must satisfy. CCIIO's approval of a State-based Marketplace is based on the approval criteria established in 45 CFR 155.105. Using these criteria, CCIIO counts 14 State-based Marketplaces, including the District of Columbia.

[113] The HHS data used in this section provides the best measure of the number and type of entities covered under the regulation. They do not, however, link to cost data needed to conduct a cost-benefit analysis. To obtain cost data linked with the covered entities, we must use Census and Bureau of Labor Statistics data sets. Because the data from these bureaus is organized along industrial and occupational categories, we lose some accuracy in the count of covered entities. We have done our best to minimize the loss of accuracy and have opted to overcount rather than undercount affected entities.

1. Number of Individuals Who Will Receive Training

a. Health Care Staffs and Managers

The Bureau of Labor Statistics [114] Occupation Tables for codes 29–0000 (Healthcare Practitioners (29–1000) and Technical Occupations (29–2000)) and 31–0000 (Healthcare Support Occupations) reports, for 2013, that ''7.8 million health diagnosing and treating practitioners, 2.9 million technicians and 3.9 million technical assistants'' were working in the health care sector in 2013.[115]

The first category of health care staff that may receive training is comprised of health diagnosing and treating practitioners. This category includes physicians, dentists, optometrists, physician assistants, occupational, physical, speech and other therapists, audiologists, pharmacists, registered nurses, and nurse practitioners. The Bureau of Labor Statistics occupational code for this grouping is 29–1000 and the 2013 reported count is 4,833,840. We note that the Bureau of Labor Statistics reports the number of physicians as 623,380 in contrast to the 888,947 physicians reported in the HRSA Area Health Resource File.[116] Although the Area Health Resource File is the best national count of the number of licensed physicians, we need data that link to physician earnings in order to assess impact, which the Area Health Resource File lacks. Because we must use alternative sources for the physician earnings data, we also reconcile the differences between the two sources with regard to the number of physicians counted in the economic analysis.

Because the Area Health Resource File's count is based on licensure, it includes physicians who may hold licenses in more than one State. There are a number of metropolitan areas that cross State boundaries and physicians practicing in these areas may be licensed in the adjoining States and, thus, will be counted more than once in the Area Health Resource File. On the other hand, the Bureau of Labor Statistics data, which report physician employment and income, may be an inaccurate count of physicians because of sampling error. We note that the sampling error reported for one physician specialty category is 6.1% and five out of seven specialty categories reported have sampling errors of 3% or greater. To resolve the difference between the Bureau of Labor Statistics and Area Health Resource File sources, we propose to take the midpoint of the difference between the two files.

The difference in the number of physicians in the Bureau of Labor Statistics and Area Health Resource File tables equals 265,567. Taking the midpoint yields 132,784 and adding this to the Bureau of Labor Statistics physician count gives us 756,164. Thus, the total count for Occupational code 29–1000—Healthcare Diagnostic and Treating Practitioners, after adjusting for the number of physicians, is 4.8 million.

The second category of health care staff that we assume will receive training is comprised of degreed technical staff (Occupation code 29–2000) and accounts for 2.8 million workers. Technicians work in almost every area of health care: From x-ray to physical, speech, psychiatric, dietetic, laboratory, nursing, and records technicians, to name but a few areas.

The third category of health care staff that we assume will receive training is comprised of non-degreed medical assistants (Occupation code 31–0000), and includes psychiatric and home health aides, orderlies, dental assistants, and phlebotomists. Health care support staffs (technical assistants) operate in the same medical disciplines as technicians, but often lack professional degrees or certificates. We refer to this workforce as non-degreed compared to medical technicians who generally have degrees or certificates. There are 3.9 million individuals employed in these occupations.

The fourth category of health care staff that we assume will receive training is health care managers (approximately 300,000 based on Bureau of Labor Statistics data for occupation code 11–9111).

The fifth category of health care staff that we assume will receive training is office and administrative assistants—Office and Administrative Support Occupation (Occupation code 43–0000). These workers are often the first staff patients encounter in a health facility and, because of this, covered entities might find it important that staff, such as receptionists and assistants, receive training on the proposed regulatory requirements. Approximately 2.7 million individuals were employed in these occupations in health facilities in 2013.[117]

Below is a summary table of individuals employed in the health care sector.

TABLE 1—HEALTH CARE EMPLOYEES THAT MAY NEED TRAINING

Health diagnosing and treating practitioners plus 132,784 physicians not in the Bureau of Labor Statistics data	4,833,840
Degreed technicians	2,849,330
Non-degreed technicians	3,924,390
Medical and health services managers	300,180
Office and administrative support staff	2,739,640
Total	14,647,380

b. Employees Working for the Federally-Facilitated Marketplaces and State-Based Marketplaces and Issuers in Those Marketplaces

We have data from CMS/CCIIO on the number of issuers offering qualified health plans in the Federally-facilitated Marketplaces. We assume that many issuers that operate in the Federally-facilitated Marketplaces also operate in the State-based Marketplaces. However, to the extent there are issuers who operate in a State-based Marketplace only, an estimate of their employees will not be included in our count of issuers (derived from the CCIIO tables of issuers participating only in the 37 jurisdictions with Federally-facilitated Marketplaces). We propose to determine the number of employees working for those issuers participating in the Federally-facilitated Marketplaces and we assume, as noted above, that some of the same issuers and employees serve the State-based Marketplaces. Determining the number of employees working for issuers participating in the Health Insurance Marketplaces is problematic because we have no data directly linking the number of

[114] National Occupational Employment and Wage Estimates United States (May, 2013), *available at http://www.bls.gov/oes/2013/may/oes_nat.htm.*

[115] In choosing data from the Bureau of Labor Statistics 800 occupation tables rather than Bureau of Labor Statistics 400 industry tables, we are including health care workers employed in entities that may not receive Federal financial assistance. Thus, the count of employees included in the following analysis may be overstated. Using the alternative Bureau of Labor Statistics industry data is also problematic. The North American Industrial Code System (NAICS 623300-Continuing Care Retirement Communities and Assisted Living Facilities for the Elderly and NAICS 623900-Other Residential Care Facilities) may include both non-covered and covered entities. Were we to include these categories in the training analysis, the results would be similar to the results achieved using the occupational data presented above. Were we to exclude these categories, we might be undercounting staff needing training. Because the industry tables offered no advantage over the 800 occupation tables and the occupations data were simpler and more direct, we chose to use them rather than the industry tables.

[116] HRSA, Area Health Resource File National, State and County Health Resources Information Database, *available at http://ahrf.hrsa.gov.*

[117] Data from Bureau of Labor Statistics 400 industries table for the health care sector: North American Industry Classification System code 62. This code includes health care and social assistance (including private, State and local government hospitals).

employees to our data on participating issuers in the Federally-facilitated Marketplaces. Consequently, we must impute the number of employees working for issuers participating in the Federally-facilitated Marketplaces and, by extension, employees working for issuers in State-based Marketplaces.

We perform this imputation by first identifying the number of issuers offering qualified health plans in the Federally-facilitated Marketplaces. To determine the number of issuers offering qualified health plans in the Federally-facilitated Marketplaces, we looked at the 2015 Qualified Health Plan Landscape Individual and Small Business Health Options Program Market Medical files.[118] The Qualified Health Plan Landscape Individual Market Medical file contains over 100,000 line items, and the Small Business Health Options Program Market Medical file contains over 50,000 line items listing each Federally-facilitated Marketplace plan for each county by metal level (bronze, silver, gold, and platinum) and catastrophic plans provided by each issuer. To determine the number of issuers in the individual and Small Business Health Options Program Marketplaces, we removed all plan line items to reduce the count to an unduplicated count of the issuers in the Federally-facilitated Marketplaces. We identified 155 individual plan issuers and 14 issuers in the Small Business Health Options Program that only issued group plans to employees of employers participating in the Small Business Health Options Program. Our total count of 169 issuers differs from the CCIIO sources, which counted issuers in each State in which they operated. For example, a national issuer such as Aetna that offers coverage through Federally-facilitated Marketplaces operating in several States was counted separately by CCIIO for each State in which it was qualified, whereas we counted it only once.[119]

In addition to 169 issuers participating in Federally-facilitated Marketplace, we are aware of 11 issuers participating only in the State-based Marketplaces. Thus, we calculate that the total number of issuers included in the analysis of covered issuers equals 180.

We next analyzed the number of employees working in the health insurance industry in the following way. Using Census Bureau 2011 payroll and employment data (the latest data available) for North American Industry Classification System 524114—Direct Health Insurance[120] we attempted to match the number of employees to the health insurance entities. The Census data permitted us to divide all health insurance issuers into ''large'' (500 or more employees) and ''small'' (fewer than 500 employees) issuers, and from that we were able to estimate the number of employees for large and small issuers.

The Census data shows 805 small issuers and 180 large issuers. The ratio of small to large issuers is about 4.5 small issuers for every large issuer. We assumed the ratio of small to large issuers in the Health Insurance Marketplaces would be approximately the same as the ratio in the Census table. We ask for public comment on this assumption.

Applying this ratio to the issuers in the Federally-facilitated Marketplaces, we get 131 small issuers and 38 large issuers. We assume that the 11 issuers (for which we have data and have thus identified) operating in the State-based Marketplaces are likely to be classified as small, based on Census workforce data. Therefore, we are adding them to the 131 small issuers identified above, bringing the total number of small issuers to 142. We ask for public comment on this assumption.

Based on the Census data, the average number of employees in a small issuer is 34 and the average number of employees in a large issuer is 2,300. Multiplying the number of small issuers by the number of employees equals 4,828 employees in the 142 small issuers and 87,400 employees in the 38 large issuers. The combined total number of employees for small and large issuers in the Federally-facilitated Marketplaces is estimated to be 92,228 employees.

With respect to the majority of issuers operating in a State-based Marketplace that we have not been able to identify but would also be subject to the regulation, we do not have any direct data. However, the workforce data we have from the Census tables covers employees regardless of their work site. If any of the 169 issuers identified above operating in the Federally-facilitated Marketplaces also operate in the State-based Marketplaces, then some portion of the nearly 92,000 employees imputed to be working for the issuers in the Federally-facilitated Marketplaces may also be working for issuers operating in the State-based Marketplaces. Thus, in effect, we are including employees working for issuers that operate in both the State-based Marketplaces and the Federally-facilitated Marketplaces in our count of employees who likely will receive training on the regulation.

At the same time that we include employees who work for issuers operating in both the Federally-facilitated Marketplaces and State-based Marketplaces, we lack direct data on issuers participating only in State-based Marketplaces. We are not able to include employees that work for insurance issuers that operate only in State-based Marketplaces, such as New York or California, which would be subject to the proposed rule. We invite public comment on ways we can identify issuers that participate only in State-based Marketplaces and the number of employees they employ.

A third category of workers who may need to be trained are Navigators receiving Federal financial assistance to support the functions they perform in assisting applicants to enroll in qualified health plans. CCIIO has awarded grant funding to 92 Navigator entities, and CCIIO estimates that 2,797 Navigators work for these 92 entities.[121]

We invite public comment on our approach to estimating the number of employees per issuer based on the Census data and seek any public information on issuers who operate only in State-based Marketplaces.

c. Medicaid and State and Local Health Department Employees

The Census Bureau State government payroll and employment data for 2013 shows the number of full-time employees working in State hospitals and departments of health as 531,251.[122] The *State Medicaid Operations Survey: Second Annual Survey of Medicaid Directors* reports that the majority of State Medicaid agencies employed 750 or fewer full-time employees with a median workforce level of 421 employees.[123] Multiplying the median level of workers by 53 Medicaid agencies adds 22,313 workers to the number of State health

[118] Qualified Health Plans Landscape Individual Market Medical (2015), *available at https://data.healthcare.gov/dataset/2015-QHP-Landscape-Individual-Market-Medical/mp8z-jtg7*.

[119] We count the issuer only once because we assume the same enterprise will minimize training costs by preparing the same training materials for all its employees nationally.

[120] United States Census Bureau, Statistics of U.S. Businesses (SUSB) (2011), *available at http://www.census.gov/econ/susb/*.

[121] HHS.gov/Health Care, By the Numbers: Open Enrollment for Health Insurance Fact Sheet, *available at http://www.hhs.gov/healthcare/facts/factsheets/2015/02/open-enrollment-by-the-numbers.html* (last visited June 12, 2015).

[122] United States Census Bureau, Government Employment and Payroll (2013), *available at http://www.census.gov/govs/apes/*.

[123] National Association of State Medicaid Directors, State Medicaid Operations Survey: Second Annual Survey of Medicaid Directors (February 2014).

and hospital workers in health departments, bringing the total to 553,564 employees. (Although a more appropriate method of calculating the total would be to use the mean as the multiplier, OCR used the median because the mean was unavailable.) However, this number double counts medical personnel that were previously counted as discussed in part C.1.a (regarding health care staffs and managers who will receive training) in this Regulatory Impact Analysis.

Using the Bureau of Labor Statistics industry data for North American Industry Classification System code 999201: State government, including schools and hospitals, we identified 446,210 medical personnel employed by State governments.[124] Subtracting this number from the 553,564 employees we identified those employed in State government health services and Medicaid programs, which results in 107,354 additional State employees who may obtain training on the provisions of the regulation.

The method for identifying and removing duplicate State medical personnel from the count of State employees in the health and Medicaid programs may remove too many covered State employees. We assume that most State medical personnel work in health departments and Medicaid agencies, but some medical personnel work in other units of State government such as environmental protection or schools that are not included in the State agencies subject to the rule. We invite public comment and data on this point.

d. Non-Health Care Personnel in Pharmacies

The 2013 Census data for all US industries identifies 18,852 pharmacy establishments. The number of employees presented in the Census data includes both pharmacists and non-pharmacist personnel. At this point, we must refer back to the Bureau of Labor Statistics data on the number of health care workers reported for 2013 because the Bureau of Labor Statistics data divides the pharmacy workforce by occupation. The number of employees that Bureau of Labor Statistics reports were employed in pharmacies for 2013 is 706,000. The number of health care workers discussed in subsection II.C.1.a. above includes 348,381 pharmacists and other health care staff in occupation codes 29–0000 and 31–0000 reported to be working in pharmacies.[125] Because we already counted the costs of health care workers employed in pharmacies in the analysis of health care staff, to achieve a more accurate estimate of the number of non-health care pharmacy workers, we must subtract the 348,381 health care staff from the total workforce Bureau of Labor Statistics reports. Removing health care staff from the Bureau of Labor Statistics data yields a net of 357,620 non-health care pharmacy workers in pharmacies who may receive training on the proposed rule.

The following table shows the total number of employees who may receive training; that is, the table shows the 50% of total workers whom we expect will receive training. The table does not include HHS employees conducting HHS health programs or activities because there are roughly 65,000 HHS total employees and many of these employees do not work in health programs or activities administered by HHS. For those employees who do work in health programs or activities administered by HHS, many may not have direct beneficiary contact. Given these limitations, we estimate the number of employees added would be very small and have little impact on overall cost.

TABLE 2—WORKERS THAT MAY RECEIVE TRAINING ON THE REGULATION

Medical health staffs and managers	7,323,690
Employees working for 180 issuers in the Health Insurance Marketplaces	46,114
State health employees	53,677
Navigators	1,399
Pharmacy workers (excluding health care personnel)	178,810
Total	7,633,717

2. Number of Covered Entities That May Train Workers

Just as there are a number of data sources for counting workforce, there are various sources for counting the number of health care entities. Many covered entities are controlled or owned by a single corporate entity and one can count each individual entity separately or count only the single corporate enterprise. For example, a multi-campus facility or vertically integrated entity that owns a hospital, a nursing home, and a home health agency and also operates an accountable care organization could count each of these entities separately—as does Medicare—or count them only once, with each entity treated as part of the corporate entity. At this point, we make two assumptions: (1) Albeit not required to do so by the regulation, each covered entity will provide some training to its staff on the requirements of the regulation; and (2) when entities are controlled or owned by a corporate entity, the corporate entity will supplement or make any desired modification to the OCR training materials and distribute the training materials. We believe this last point to be especially true because rather than have each entity prepare its own training materials, the corporate entity is more likely to prepare one set of training materials and distribute the materials to its individual entities. This is because the corporate entity saves money by preparing a limited set of training materials and assures uniform quality and consistency in its policies across all its entities. It is also possible that some local health centers in a State may be managed from a central location that handles logistics and training materials. Therefore, we propose using the 2012 Census table that presents the number of firms and establishments. In the Census data, a corporate entity is referred to as a ''firm'' and the corporation's facilities are ''establishments.'' When a firm has one establishment, the establishment is the firm. The difficulty we face in using these data sources is that the Census data captures all entity types that fit the definition of a health care service entity, including entities such as private retirement communities that are unlikely to receive Federal financial assistance and thus would not be covered by Section 1557. In our use of the Census data, we attempted to exclude types of entities that are not likely to receive Federal financial assistance by excluding retirement communities and other similar type entities in the file but have included entities that may receive Federal financial assistance, for example, community health centers and residential centers for individuals with intellectual disabilities.

To test our success in producing a list of covered entities from the Census data, we compared the number of entities we selected from the Census data and the number of entities included in the CMS Provider of Service file. However, to make the lists comparable, we have to remove the count of Clinical Laboratory Improvement Act laboratories from the CMS Provider of Service data files. There are close to 450,000 Clinical Laboratory Improvement Act laboratories located in hospitals, clinics, outpatient centers, and doctors' offices.

[124] Bureau of Labor Statistics (BLS) 400 Industries tables *available at: http://www.bls.gov/oes/current/999201.htm.*

[125] The Area Health Resource File reports 272,022 pharmacists licensed in 2014.

Only a few thousand of these laboratories serve the public. The majority of laboratories serve the facility in which they are housed—including them in our comparison would grossly distort this comparison.

If we add the entities in the Provider of Service file (excluding Clinical Laboratory Improvement Act laboratories) and the number of community health centers to our list of affected entities that are not included in the Provider of Service file, we get a total of 134,543 entities. Using the Census data, minus the categories for medical laboratories, we obtain a total of 139,164 establishments. It is evident that these numbers are very similar. However, as discussed earlier, we propose using only the number of firms for the analysis of the number of entities possibly conducting training, that is, 70,384 firms. As, noted, we believe firms and not establishments will modify or supplement materials and train employees.

In addition to the firms we include from the Census file, we must add physicians' office firms and pharmacy firms because they may also need to train some workers. Physicians' office firms and pharmacy firms are generally referred to as physician group practices and pharmacy chains.

Below we present the types and number of firms that we estimate will take part in the training for the regulation.

TABLE 3—NUMBER OF HEALTH CARE ENTITY FIRMS EXPECTED TO TAKE PART IN TRAINING

NAIC	Entity type	Number of firms
62142	Outpatient mental health and substance abuse centers	4,987
621491	HMO medical centers	104
621492	Kidney dialysis centers	492
621493	Freestanding ambulatory surgical and emergency centers	4,121
621498	All Other Outpatient Care Centers	5,399
6215	Medical and Diagnostic Laboratories	7,958
6216	Home health care services	21,668
6219	All other ambulatory health care services	6,956
62321	Residential intellectual and developmental disability facilities	6,225
6221	General medical and surgical hospitals	3,067
621991	Psychiatric and substance abuse hospitals	411
6221	Specialty (except psychiatric and substance abuse) hospitals	373
6231	Nursing Care Facilities (Skilled Nursing Facilities)	8,623
44611	Pharmacies and drug stores	18,988
6211	Offices of physicians	188,921
524114	Insurance Issuers	180
	Navigator Grantees	92
	Total Entities	278,565

3. Training Costs

a. Cost of Training Materials and Presentations

There are two components to the cost of training the workers we identified in the previous section: (1) The cost of training materials that is based on the number of covered entities identified in the previous section; and (2) the cost of employee time spent in training.

OCR estimates, based on its experience of training employees on other regulations it enforces, that training employees on this regulation will take about one hour of an employee's time. Based on discussions with firms that develop training materials, we estimate that developing or presenting materials for a one-hour course would cost about $500. However, OCR proposes to provide covered entities with training materials that will cover the key provisions of the regulation that can be used by entities in conjunction with their own training materials. We estimate that OCR preparing the training materials on the regulation will substantially reduce the material preparation burden to covered entities and reduce the cost by about three quarters or about $375 per entity. Therefore, the costs to entities will equal $125 multiplied by the number of entities that will prepare and present training materials. Based on its experience in preparing training materials for Health Insurance Portability and Accountability Act regulations and other civil rights regulations, OCR expects to spend $10,000 to develop training materials that will prepare health care workers and managers to effectively implement the Section 1557 regulation.

Training materials can be presented in a number of ways. A common method for offering training materials is through e-courses that are distributed over an entity's computer network. Another method is to offer lectures to selected employees/staff and then have attendees present the materials to their co-workers as part of train-the-trainer programs. For small entities, one lecture session may be given to all employees. Regardless of presentation mode, we estimate that preparing the materials or having a lecturer will cost about the same amount.

Applying the $125 per course materials to the number of firms (125 × 278,565)—including the 169 health insurance issuers—equals $34.8 million for the cost of developing training materials.

b. Cost of Employee Time

The next step is to compute the cost of employee time for training. This involves taking the hourly wage rate times one hour, times the number of employees expected to take the training. The problem we face is only the Bureau of Labor Statistics data provides employee median wage rates.[126] Census data presents only aggregate annual payroll data and we must calculate the cost of employee time indirectly. We are uncertain about how many employees identified in the workforce above will actually seek and obtain training and how many firms in the health sector will offer training. However, for the purposes of this analysis we assume that all firms may offer some training to their staffs, but because the training is voluntary, and because only a portion of

[126] We chose to use the median rather than the mean wage because the wage variances are large, ranging from $22,400 to $246,320 for annual salaries with mean hourly wages of $10.77 to $118.42 for Occupation 29–1000.

employees who have direct patient contact or otherwise have duties impacted by the regulation may require or take training, we assume that 50% of employees may receive training.

The occupation code 29–1000 (health care practitioners) applies to the 4.8 million professional staff and degreed technical staffs we discussed above. The Bureau of Labor Statistics reports the median hourly wage for this code as $35.76. We estimate one hour of a worker's time would be required for training. To this amount we must add 100% for fringe benefits and overhead, which yields an adjusted hourly wage per employee of $71.52. Assuming that half of the 4.8 million health care practitioners identified earlier receive or obtain training (2.4 million workers), and multiplying this number by the hourly employee wage plus fringe benefits and overhead for one hour equals slightly more than $170 million in one-time training costs for practitioners.

For the degreed health care work force in occupation 29–2000, the median hourly wage is $19.65. Adding 100% for fringe benefits and overhead equals $39.30. The total training cost for one hour of training for half of the 2.8 million degreed technical staff (1.42 million workers) is about $56.0 million. In addition, we must add the cost of training non-degreed staff (reported in occupation 31–0000) who earn a median hourly wage of $12.54. Adding 100% for fringe benefits and overhead to the $12.54 median hourly wage rate yields an adjusted wage of $25.08. Multiplying this amount by half of the 3.9 million workforce yields a one-time cost of $49.2 million.

To these amounts we must add the cost of training the medical and health service managerial staff in occupation 11–9111: 300,180 individuals with a median hourly pay rate of $43.72. Adding 100% for fringe benefits and overhead gives us an adjusted hourly wage of $87.44, and assuming that half of the managers would seek or receive training results in a one-time cost of $13.1 million.

The cost of training occupation code 43–0000, office and administrative support workers employed in covered health care entities, is the product of the median hourly rate of $15.26 adjusted for fringe benefits and overhead multiplied by the 2.7 million workers reported for North American Industry Classification System code 62: Health Care and Social Assistance (including private, State, and local government hospitals). Adding 100% for fringe benefits and overhead to the $15.26 equals $30.52. Multiplying the pay rate by half the number of support and administrative personnel equals $41.8 million.

For the remaining entities for which we cannot use Bureau of Labor Statistics data, we must use the industry payroll and employment Census data. To arrive at an estimate of the cost of time for training employees of health insurance issuers and State health and Medicaid agencies, we must divide the total annual payroll reported for these entities by the total number of employees and divide that number by the annual hours paid (2,080 hours), adjusted for fringe benefits and overhead.

For workers employed by the issuers participating in the Health Insurance Marketplaces, we must determine the hourly wage rate for workers employed in small and large issuers as we have described them above. The total number of workers in small entities (fewer than 500 workers) is 27,269 and the annual payroll is $1.68 billion. The average wage per employee is $61,895. Using the 2,080 hours for the annual number of work hours, we obtain an hourly rate of $29.76. Assuming that the payroll amounts reported in the Census data do not include fringe benefits and overhead, we add 100% to the hourly rate to yield $59.51 per hour. Multiplying this amount by half of the 4,454 employees in small issuers equals $132,540 in one-time training costs.

The total number of employees employed by large issuers (500 or more) is 415,017 and the annual payroll is $30.8 billion. The average annual wage is $74,219. Dividing this figure by 2,080 hours yields an hourly wage rate of $35.68. Multiplying by 100% for fringe benefits and overhead yields $71.36. Multiplying this amount by 50% of the 87,400 workers equals slightly more than $3.12 million in one-time training costs.

For State government workers employed in welfare, health, and hospital services, we divided the total number of workers the 2013 Annual Census Bureau reported (755,993 employees) into the annual payroll reported for the period ($3,275,595,529). On an annual basis, the average salary per employee equals $52,123. The hourly rate equals $25.06 and multiplied by 100% for fringe benefits and overhead yields $50.12 per worker for training costs.

In the *State Medicaid Operations Survey: Second Annual Survey of Medicaid Directors* cited earlier, States reported the median number of full-time Medicaid employees is 421. Using this number multiplied by the 53 Medicaid agencies in the 50 States, the District of Columbia, Puerto Rico, Guam, and the other territories, we added 22,313 workers to the total of health and hospital workers reported in the Census data, bringing the total number of workers in covered State government entities to 553,564. We then subtracted the 446,210 medical personnel we accounted for in the training costs for all health care personnel and therefore were considered to be duplicative of the medical personnel previously counted in our analysis of medical staff workforce (occupations 29–1000, 29–2000 and 31–0000). This left a net of 107,354 State employees receiving training. Taking half of this number and multiplying it by $50.12 equals a one-time training cost of slightly more than $2.69 million.

Although we removed the cost of training the 446,210 medical personnel from the State training cost analysis to avoid double counting training costs, the cost of training half the medical staff may still fall to the States where they are employed. We estimate the cost to train State medical personnel to be approximately $10.5 million.[127]

The 2013 Bureau of Labor Statistics data for North American Industry Classification System pharmacies and drugstores reports a total workforce of 706,000 workers. As with the analysis for State employees, we must remove health care workers that are already counted in our training costs analysis of the health care workforce. To avoid double counting training costs for these occupations, we removed them from the count of the pharmacy workforce. However, the entities that employ these workers will still bear the cost for training them. At a median weighted wage of $47.22, if employers trained half of the medical staff they employ, they would be responsible for $8.2 million in training costs for the employees we excluded from the analysis to avoid double counting.[128]

For the 357,620 non-medical pharmacy personnel, the cost of training half the employees equals the median hourly rate for pharmacy employees ($13.37), or $26.74 after adding 100% for fringe benefits and overhead. Total

[127] We calculated the cost of training the medical personal using the weighted median hourly rate, $47.22, multiplied by the 446,210 medical staff identified as employed in State governments.

[128] Determining the cost to train employees other than pharmacists and medical staff who work in pharmacies requires use of the Bureau of Labor Statistics industry data for North American Industry Classification System code 446110. These data show that for 2013, 348,380 medical practitioners, technologists and medical support staff (occupation code 29–1000 and 29–2000 and 31–000) were employed in pharmacies and drug stores.

costs for employee training time equals $7.78 million.

The following table summarizes the training costs we estimate for the proposed rule.

TABLE 4—TOTAL TRAINING COSTS

	Number of entities/ workers	Cost
Training preparation costs ($125/entity)/entity	* 278,565	$34,820,625
Health care staff and managers training	7,323,690	335,137,611
Small Issuers in the Health Insurance Marketplace training	2,414	143,669
Large issuers in the Health Insurance Marketplace training	43,700	3,118,618
Navigators	1,399	120,551
State health, hospital and Medicaid worker training	53,677	2,690,291
Pharmacy worker training	178,810	6,791,203
Total	7,633,717	382,822,568

* Not included in column total.

D. Notification and Other Procedural Requirements

1. Designation of Responsible Employee and Adoption of Grievance Procedures

Pursuant to the regulations implementing Section 504, recipients of Federal financial assistance with 15 or more employees are required to designate a responsible employee to coordinate compliance with respect to nondiscrimination requirements and to have a grievance procedure to address complaints of discrimination under this law. Of the 279,000 covered health care entities, approximately 15% employ more than 15 employees, resulting in approximately only slightly more than 58,500 covered health care entities being required to have a grievance procedure and designate a responsible official. Thus, all recipients of Federal financial assistance with 15 or more employees are already expected to have in place a grievance procedure and a designated employee to coordinate their compliance responsibilities. The proposed rule standardizes the requirement to designate a responsible employee and adopt grievance procedures across all bases of discrimination prohibited under Section 1557.

To implement the proposed rule, a recipient of Federal financial assistance could increase the responsibilities of an already-designated employee to handle compliance with the proposed rule's nondiscrimination requirements. In addition, a recipient of Federal financial assistance could increase the scope of existing grievance procedures to accommodate complaints of discrimination under all bases prohibited under Section 1557. The costs associated with these requirements are the costs of training the designated employee on his or her increased responsibilities and the costs associated with modifying the existing grievance procedures to reflect the additional bases of race, color, national origin, sex, and age. Here we are referring to employee training to perform their specific enforcement responsibilities, not one-time training in the provisions of the rule described in the training section above. We also note that grievance officials will probably receive specific training on their new responsibilities and that covered entities will probably provide this additional training and absorb the costs, which are expected to be minimal. Many covered entities already may be using their existing grievance procedures to address the additional cases covered under Section 1557.

State-based Marketplaces are required to designate an employee to handle compliance responsibilities and to adopt a grievance procedure under the ADA. The duties of the employee and the grievance procedure could be modified to reflect all the bases covered under Section 1557. We have not estimated the additional costs of training grievance officials on their individual enforcement responsibilities, but believe such cost would be absorbed in general training costs of all employees on their job responsibilities. Costs associated with modifying existing grievance procedures are covered in the section of the analysis on enforcement.

2. Notice Requirement

The implementing regulations of Title VI, Section 504, Title IX, and the Age Act require recipients of Federal financial assistance and, in the case of Section 504, the Department, to notify individuals that recipients (and, under Section 504, the Department) do not discriminate. The content of the nondiscrimination notices varies based on the applicable civil rights law.

The proposed rule harmonizes notification requirements under Title VI, Section 504, Title IX and the Age Act, and standardizes the minimum information for a notice. The proposed rule also requires initial and continuing notification of individuals. The proposed rule provides that OCR will draft a sample notice in English that meets the requirements and will translate that notice into 15 additional languages. Covered entities have discretion to use the OCR sample notice or their own notice, if preferred, and to post the notice in non-English languages.

As all Section 1557 covered entities will need to create or update an existing notice of nondiscrimination, all covered entities can discharge their responsibilities under § 92.8(a) by replacing their current notices with the sample notice OCR will make available to all covered entities pursuant to § 92.8(c). Using the sample OCR notice means that covered entities will not have to compose their own notices; we expect nearly all covered entities will use the sample OCR notice.

All covered entities will incur costs, however, to implement § 92.8(a) of the proposed rule, which requires ''initial and continuing'' notification. Such notification is expected to involve:

- Downloading the notice from the OCR Web site;
- Printing copies of the notice for posting;
- Posting hard copies of the notice in public spaces of the office or facility; and
- Posting the notice on the entity's Web site, if it has one.

Approximately 278,500 covered entities would spend one minute downloading the notice from the OCR

Web site and then spend five minutes posting one copy of the notice in an average of two areas each. (Smaller entities may post the notice only in a reception area; larger entities may post the notice in emergency and reception areas.) Based on the fully loaded cost of $30.52 per hour for a clerical worker, the cost for the average covered entity is estimated to be:

- Downloading the OCR notice—1 minute at $30.52 per hour equals $0.51;
- Printing 2 hard copies of the notice—1 minute at $30.52 per hour equals $0.51;
- Posting the notice in an average of two areas—5 minutes, at $30.52 per hour equals $2.54; and
- Preparing the OCR notice for posting on the facility's Web site and posting the notice on the Web site—ten minutes of a clerical worker's time adjusted for fringe benefits and overhead equaling $5.08.

For each entity, the cost of downloading the notice, posting it in a public place and posting it to the entity's Web site is $8.64. The total cost for the 279,000 covered entities is $2,411,000.

Covered entities that distribute general or major publications targeted to patients, consumers, or members of the public will need to update these publications to include the new notice. However, as noted above, we are allowing entities to exhaust their current publications, rather than do a special printing of the publications to include the new notice. When covered entities restock their printed materials, they will be expected to include in those printed materials the notice that OCR will provide with the final rule.

Because we are permitting covered entities to exhaust their existing stock of publications with the current notices before using the new notice, we conclude that the notice requirement imposes no resource costs related to including updated notices in the publications. We invite public comment on our analysis. Section 92.8 provides covered entities discretion to post the OCR sample notice of nondiscrimination in 15 non-English languages, which can include languages that differ from OCR's list. The 15 languages cover over 90 percent of non-English language speakers. In addition, covered entities can draft and translate their own notice in however many languages they choose, if they prefer.

We examined CMS contractual cost for translating a one page notice into 13 languages which was $1,000. Based on this figure, if we were providing notices to approximately 300,000 entities and used the same contractor, the costs to the Federal government would be a maximum of approximately $1.4 million dollars. However, because the Federal government would be posting the notice onto its Web site, rather than printing it, covered entities would have to bear the cost of downloading and printing the notice from OCR's Web site and then posting it.

We expect total costs to the government to be limited to $1,000 to translate the notice into 15 languages and place the translated notices on OCR's Web site.

Although not required, we expect that many covered entities would choose to post the OCR-provided notice in one or more non-English languages on their Web sites, in their physical office space, and in certain publications they may have. We do not know how many covered entities would take this action or how many non-English language versions of the notice they would choose to post, or where they would make the non-English versions of the notice available. We invite comment on these issues.

Section 92.8 requires covered entities to publish taglines indicating the availability of language assistance services in the top 15 languages nationally. OCR will make these taglines available electronically in the 15 languages; therefore, there will be no burden to the covered entity other than the cost of printing and posting these taglines, as described above with respect to the notice. We are uncertain of the exact volume of taglines that will be printed or posted, but we estimate that covered entities will print and post the same number of tag lines as notices and therefore the costs would be comparable to the cost for printing and disseminating the notice, or $2,411,000. The costs to the federal government for translating the taglines will approximately be the same as for printing the notices or $1,000. We estimate that the combined costs of printing and distributing notices and tag lines will be $4,822,000 for entities and $2,000 for the Federal government. We seek public comment on this estimate.

E. Meaningful Access for Individuals With Limited English Proficiency (LEP)

Proposed § 92.201, which effectuates Section 1557's prohibition of national origin discrimination as it affects individuals with limited English proficiency, does not pose any new burden on covered entities. With regard to recipients of Federal financial assistance, the proposed rule adopts recipients' existing obligations under Title VI to take reasonable steps to provide meaningful access to individuals with limited English proficiency and codifies standards consistent with long-standing principles from the HHS LEP Guidance regarding the provision of oral interpretation and written translation services. Because the proposed rule does not impose duties beyond recipients' legal obligations under Title VI, the proposed rule imposes no new burden.

Although Title VI does not apply to the Department, Executive Order 13166 ''Improving Access to Services for Persons with Limited English Proficiency,'' has applied to HHS for nearly 15 years.[129] This Executive Order requires Federal departments to develop and implement a plan, consistent with the HHS LEP Guidance, to ensure that persons with limited English proficiency can meaningfully access the Department's programs and activities. HHS adopted a Language Access Plan in 2000, and updated it in 2014, to provide individuals with limited English proficiency meaningful access to HHS-conducted programs and activities.[130] Because the proposed rule does not impose duties beyond the Department's existing obligation under the Executive Order, the proposed rule imposes no new burden on the Department.

Title VI applies to Title I entities that receive Federal financial assistance, including State-based Marketplaces. Executive Order 13166 applies to the Federally-facilitated Marketplaces as an HHS-conducted health program. Additionally, both Federally-facilitated Marketplaces and State-based Marketplaces must already comply with language access provisions of the Federal regulations governing Health Insurance Marketplaces.[131] For instance, 45 CFR 155.205(c) requires Health

[129] E.O. 13166, 65 FR 50121 (2000).

[130] U.S. Department of Health and Human Services, Language Access Plan (LAP) (2013).

[131] Under Federal regulations governing the Health Insurance Marketplaces, the term ''Exchange'' includes a Marketplace that is ''established and operated by a State. . . or by HHS.'' 45 CFR 155.20. Health plans seeking certification as qualified health plans must provide information on certain claims payment and rating practices, cost-sharing, and enrollee and participant rights in information in plain language, which ''means language that the intended audience, including individuals with limited English proficiency, can readily understand and use . . . .'' 42 U.S.C. 18031(e)(3)(B). Marketplaces must also provide language assistance services for applicants and enrollees who are limited English proficient for the following Marketplace functions, documents, and information: consumer assistance functions (including the Navigator Program), education and outreach activities; all applications, forms, and notices; a Marketplace's toll-free call center; and a Marketplace's Internet Web site, which includes comprehensive information on the costs, benefits, and quality of qualified health plans. 45 CFR 155.205(a), (d), (e), 155.230(b). These regulatory provisions incorporate by reference the language assistance services requirement in 45 CFR 155.205(c)(2).

Insurance Marketplaces to provide information to applicants and enrollees in a manner accessible to persons with limited English proficiency, including through the use of language assistance services, such as oral interpretation and written translation. We view covered entities' obligations under the proposed rule to ''take reasonable steps to provide meaningful access'' as imposing no greater burden than § 155.205(c) already imposes.

F. Nondiscrimination on the Basis of Sex

Section 1557 prohibits discrimination on the basis of sex, including sex stereotyping and gender identity, in certain health programs and activities. When providing services, including access to facilities, covered entities must provide individuals with equal program access on the basis of sex, and are required to treat individuals in a manner consistent with their gender identity.

Prior to the enactment of Section 1557, Title IX applied to educational institutions. Therefore, medical schools, nursing programs, and other health education programs were already prohibited from discriminating on the basis of sex. Under Section 1557 and this proposed regulation, health insurance issuers receiving Federal financial assistance, hospitals, clinics and other health facilities, HHS health programs and activities, and Title I entities, along with the staff and practitioners working in these health programs, are now similarly prohibited from discriminating on the basis of sex.[132] This section discusses the costs associated with the prohibition of discrimination on the basis of sex in the proposed rule, taking into account the existing environment, including legal authorities that address equal access on the basis of sex.

Covered entities that provide or administer health services or health insurance coverage are covered by the prohibition of discrimination on the basis of sex, including sex stereotyping and gender identity. The costs that we anticipate that covered entities would incur relate to: (1) Training; (2) enforcement; (3) the posting of the notice; (4) the revision of policies and procedures; and (5) some costs associated with changes in discriminatory practices. The costs related to training, enforcement, and the posting of the notice have already been discussed in this analysis. This section discusses costs related to changes in policy and procedures and potential changes in discriminatory practices.

Costs for Entities Providing or Administering Health Services

The NPRM would not invalidate specialties that focus on men or women, *e.g.,* gynecology, urology, etc. Nor would providers have to fundamentally change the nature of their operations to comply with the regulation. For example, the NPRM would not require a provider that operates a gynecological practice to add to or change the types of services offered in the practice.

Under the sex discrimination prohibition, however, providers of health services may no longer deny or limit services based on an individual's sex, without a legitimate nondiscriminatory reason. Although a large number of providers may already be subject to state laws or institutional policies that prohibit discrimination on the basis of sex in the provision of health services, the clarification of the prohibition of sex discrimination in this regulation, particularly as it relates to discrimination on the basis of sex stereotyping and gender identity, may be new. We anticipate that a large number of providers may need to develop or revise policies or procedures to incorporate this prohibition. For example, if a hospital or other provider has specific protocols in place for domestic violence victims, but only engages that protocol for women, the provider would have to revise its procedures to require that protocol for all individuals regardless of sex. A provider specializing in gynecological services that previously declined to provide a medically necessary hysterectomy for a transgender man would have to revise its policy to perform the procedure on transgender individuals in the same manner it provides the procedure for other individuals.

Developing or Revising Policies and Procedures

We assume that it will take, on average, 3–5 hours for a provider to develop or modify policies and procedures concerning sex discrimination. We are selecting four hours, or the midpoint of this range, for our analysis. We further assume that three of the hours will be spent by a mid-level manager equivalent to a front-line supervisor (Occupation code 43–1011), at a salary, with fringe benefits and overhead of $48.52 per hour, and one hour will be spent by executive staff equivalent to a general and operations manager (Occupation code 11–1021), at a salary, with fringe benefits and overhead of $81.84 per hour. We further assume that 75% of covered health providers will need to develop or modify policies and procedures, given that some proportion of health care providers already prohibit sex discrimination based on State law or institutional policies prohibiting discrimination generally. The total cost for the estimated 208,700 providers to make their policies and procedures consistent with the regulatory prohibition on discrimination on the basis of sex is estimated to be a one-time cost of approximately $47.5 million, which we assume is divided evenly between the first two years of compliance.

The above estimates of time and number of entities that would have to revise their policies under the regulation is an approximate estimate based on general BLS data. Due to the wide range of types and sizes of covered entities, from complex multi-divisional hospitals to small neighborhood clinics and physician offices, the above estimates of time and number of entities that would have to revise their policies under the regulation is difficult to calculate. We invite the public to submit data and comments on our estimate.

Stopping Discrimination

For providers that discriminate on the basis of sex in violation of the proposed rule, some changes in behavior or action would be necessary to come into compliance. We anticipate some change in the patient population for which a particular provider provides care or the extent of services provided. However, the infrastructure and protocols for providing services or treatment are already in place; providers would simply have to start providing those existing services in a nondiscriminatory manner to individuals regardless of sex. For example, a provider could not refuse to treat a patient for a cold or a broken arm based on the patient's gender identity. Similarly, if the provider is accepting new patients, it must accept a new patient request from a transgender individual and cannot decline to accept a transgender person in favor of a person who is not transgender.

However, the proposed rule does not impose a burden on covered entities with respect to the number of patients treated. The proposed rule does not

[132] We note that consistent with OCR's enforcement of other civil rights authorities, the proposed definition of Federal financial assistance under the regulation does not include Medicare Part B, making physicians receiving only Medicare Part B payments, not covered under the regulation. However, because almost all physicians receive payments from other Department programs such as Medicaid or Medicare meaningful use payments, we believe that there would be very few physicians excluded from these provisions.

require a covered entity to change the total number of patients it sees or to treat more patients than it currently accepts. Providers may continue to treat the same number of patients that were accepted prior to the issuance of this proposed rule, but they must do so in a nondiscriminatory manner. Thus, for example, if a provider is not accepting new patients, the provider does not have to accept a new patient request from a transgender person. We anticipate that the costs associated with these types of changes would be minimal.

Moreover, costs associated with administering care or treating a new patient generally would be offset by the reimbursement received by the provider for providing the care, in the same way the provider gets paid for existing care or treatment of patients. Thus, for example, for the hospital or other provider that needs to revise its protocol for domestic violence to require that protocol for all individuals regardless of sex, rather than just women, there would be little to no net increase in costs for treating men because the hospital or provider would be paid for its services in the same way it would be paid to treat a woman for the same care. We welcome comments on this assumption and information about costs.

Costs for Entities Providing or Administering Health Insurance Coverage

The ACA, including Section 1557, changed the health care landscape for millions of people by instituting protections against sex discrimination in the provision of health care and health insurance coverage. Prior to the ACA, it was standard health insurance practice to treat women differently in premium pricing and coverage of benefits,[133] while transgender individuals frequently experienced discrimination when seeking treatment.[134]

The ACA addresses inequitable treatment by health plans based on sex in multiple ways. CMS regulations implementing the ACA prohibit Title I entities[135] and most health insurance issuers[136] from discriminating based on sex, including sex stereotyping and gender identity, in addition to other bases. These market-wide provisions are applicable to health insurance issuers both on and off the Health Insurance Marketplace, which includes qualified health plan issuers[137] and health insurance issuers providing non-grandfathered coverage in the individual and group markets outside of the Health Insurance Marketplace.[138]

In addition, the Affordable Care Act prohibits many health insurance issuers from charging higher premiums based on sex;[139] failing to provide essential health benefits that greatly impact women, such as maternity care;[140] failing to cover preventive services that are necessary for women's health, such as mammograms;[141] and denying benefits based on pre-existing conditions[142] or health factors,[143] many of which affect women's health, such as a history of a Caesarian section or a history of domestic violence.[144] Thus, health insurance issuers and the Health Insurance Marketplaces have already had to expand access to women and lesbian, gay, bisexual and transgender (LGBT) individuals under these health insurance market reforms, independent of Section 1557. The existence of these other provisions circumscribes cost burdens on Health Insurance Marketplaces and issuers that are recipients of Federal financial assistance that are imposed by the prohibition of sex discrimination in the proposed rule. However, the proposed rule nonetheless would impose some costs.

Section 92.207 (Nondiscrimination in health insurance and other health coverage) of the proposed rule prohibits discrimination on the basis of sex, including sex stereotyping and gender identity, by a covered entity providing or administering health insurance or other health coverage. As noted, many of the same covered entities subject to Section 1557, including Health Insurance Marketplaces and health insurance issuers that are recipients of Federal financial assistance, are also subject to existing nondiscrimination provisions in CMS regulations. While the CMS regulations complement and do not replace Section 1557, the existing nondiscrimination requirements applicable to health insurance issuers and Health Insurance Marketplaces mean that these entities are aware that they are not permitted to discriminate on the basis of sex, including sex stereotyping and gender identity, and thus they are familiar with their nondiscrimination obligations under the law. We assume that these covered entities have already taken steps to comply with CMS regulations and so instituted changes in their policies and actions. To the extent these existing obligations overlap with Section 1557 and covered entities have taken steps required under the CMS regulations, this proposed rule will impose little or no burden on health insurance issuers and Title I entities to comply with Section 1557's prohibition on sex discrimination because these covered entities should already be in compliance with regulations that prohibit discrimination on the basis of sex, including sex stereotyping and gender identity.

Developing or Revising Policies and Procedures

There may be some incremental burden on issuers and Title I entities in terms of the additional guidance that this proposed rule provides related to sex discrimination, since, in some circumstances, it provides more detail than CMS regulations or guidance. Therefore, covered entities may have an increased burden when incorporating this rule into their existing nondiscrimination policies and procedures. For example, this rule specifies that an explicit categorical exclusion of coverage for health care

[133] *See* Adelle Simmons, Katherine Warren, and Kellyann McClain, *ASPE Issue Brief, The Affordable Care Act: Advancing the Health of Women and Children,* (January 9, 2015), *available at http://aspe.hhs.gov/health/reports/2015/MCH/ib_mch.pdf*; *HHS.gov/Health* Care, The Affordable Care Act and Women Fact Sheet, *http://www.hhs.gov/healthcare/facts/factsheets/2012/03/women03202012a.html* (last visited June 12, 2015).

[134] *See* Lambda Legal, *When Health Care Isn't Caring, Lambda Legal's Survey on Discrimination Against LGBT People and People Living with HIV,* (2010), *available at http://www.lambdalegal.org/publications/when-health-care-isnt-caring.*

[135] 45 CFR 155.120(c)(1)(ii) prohibits a Health Insurance Marketplace from discriminating based on race, color, national origin, disability, age, sex, gender identity, or sexual orientation.

[136] 45 CFR 147.104(e) prohibits health insurance issuers in the non-grandfathered individual, small and large group markets from employing benefit designs that will have the effect of discouraging the enrollment of individuals with significant health needs in health insurance coverage or discriminate based on an individual's race, color, national origin, present or predicted disability, age, sex, gender identity, sexual orientation, expected length of life, degree of medical dependency, quality of life, or other health conditions. 45 CFR 156.200(e) prohibits a qualified health plan issuer from discriminating on the basis of race, color, national origin, disability, age, sex, gender identity, or sexual orientation. 45 CFR 156.125(a) prohibits issuers that provide essential health benefits from using benefit designs that discriminate based on an individual's age, expected length of life, present or predicted disability, degree of medical dependency, quality of life, or other health conditions. 45 CFR 156.125(b) requires issuers that provide essential health benefits to comply with 45 CFR 156.200(e).

[137] 45 CFR 147.104(e), 156.200(e) and 156.125(a)–(b) are applicable to qualified health plan issuers.

[138] 45 CFR 147.104(e) is applicable to non-grandfathered coverage in the individual, small and large group markets. 45 CFR 147.150(a) incorporates essential health benefits requirements (and implementing regulations at 45 CFR 156.200(e) and 156.125(a)–(b)) for non-grandfathered coverage in the individual and small group markets.

[139] 45 CFR 147.102.

[140] 45 CFR 156.110.

[141] 45 CFR 147.130.

[142] 45 CFR 147.108.

[143] 45 CFR 147.110.

[144] *ASPE Issue Brief, supra* note 133.

services related to gender transition is discriminatory on its face. To the extent a covered entity did not interpret sex discrimination on the basis of gender identity in this way, the covered entity would have to revise its policies and procedures to provide coverage consistent with this rule's parameters, which might include revising policies to include gender transition-related care.

However, we note that the number of major U.S. employers providing transgender-inclusive health care coverage has been increasing dramatically, from 0 in 2002, to 49 in 2009, 278 in 2013, 336 in 2014, and finally 418 in 2015.[145] This indicates that plans that offer transgender-inclusive health care are becoming readily available as models for issuers that may not offer such care, limiting their costs in developing or revising compliant policies and procedures.

Similar to the estimate for providers of health services, we assume that it will take, on average, three to five hours for issuers of health insurance coverage to develop or modify policies and procedures concerning sex discrimination. We are selecting four hours, or the midpoint of this range, for our analysis. We further assume that three of the hours will be spent by a mid-level manager, at a salary, with fringe benefits and overhead of $57.60 per hour,[146] and one hour will be spent by executive staff, at a salary, with fringe benefits and overhead of $122.15 per hour. Based on our best estimate of industry compliance with CMS regulations, we further assume that one-third or 33% of health insurance issuers will need to develop or modify policies and procedures. Based on an unduplicated count of issuers, we previously identified 180 issuers in the Federally-facilitated Marketplaces. One third of this number equals 60 issuers that we estimate would need to revise policies to address the prohibition of sex discrimination in this regulation. The costs to issuers to revise policies and procedures to provide coverage consistent with this rule's parameters equal 60 issuers multiplied by $295 for a one-time cost of $17,700.

Stopping Discrimination

In addition to the cost some covered health insurance providers may have for revising policies and procedures to comply with the proposed rule, such providers may also incur a minimal cost related to the cost of coverage. In this regard, we note that the April 2012 California Department of Insurance Economic Impact Assessment on Gender Nondiscrimination in Health Insurance found that covering transgender individuals under California's private and public health insurance plans would have an ''insignificant and immaterial economic impact'' on costs.[147]

This conclusion was based on evidence of low utilization and the estimated number of transgender individuals in California. The transgender population of California was estimated to range between 0.0022% and 0.0173%.[148] The study revealed that contrary to common assumptions, not all transgender individuals seek surgical intervention, and that gender-confirming health care differs according to the needs and pre-existing conditions of each individual.[149] Additionally, issuers in California that established premium surcharges after enactment of California's Gender Nondiscrimination in Health Insurance Law subsequently eliminated them because they found they did not spend the extra funds generated.[150]

Based on the California study, we believe that providing transgender individuals non-discriminatory insurance coverage and treatment will impact a very small segment of the population due to the fact that the number of transgender individuals (and particularly those who seek surgical procedures in connection with their gender transition) in the general population is small, and will have minimal impact on the overall cost of care and on health insurance premiums.[151]

G. Accessibility of Electronic and Information Technology

Although Section 1557 requires covered entities to ensure that the health programs, services, and activities provided through electronic and information technology are accessible to individuals with disabilities, all covered entities affected by Section 1557 already have these obligations under Section 508, Section 504 or the ADA.

1. HHS Health Programs and Activities, Including the FFMs

Section 508 requires that electronic and information technology developed, procured, maintained, or used by Federal agencies be accessible for individuals with disabilities (both members of the public and Federal employees). Section 504 also establishes general obligations for Federal agencies to make their programs that are provided through electronic and information technology accessible to individuals with disabilities. Both Section 504 and Section 508 were in place before the passage of the ACA. There is, therefore, no additional burden under Section 1557 for HHS health programs, including the Federally-facilitated Marketplaces, as the Section 1557 requirements are consistent with the obligations these programs already have under Section 504 and Section 508.

2. Recipients of Federal Financial Assistance From HHS and Title I Entities

Section 504 also establishes general obligations for entities receiving Federal financial assistance to make their programs, services, and activities provided through electronic and information technology accessible to individuals with disabilities. The ADA imposes similar accessibility requirements on covered entities. The proposed regulation thus imposes no additional burden on recipients of Federal financial assistance from HHS because Section 1557 is consistent with existing standards these entities are already obligated to meet under the ADA and Section 504. Title I entities have no Section 1557 burden with respect to this proposed requirement, as the Title I entities must already be compliant with the ADA, which is consistent with the Section 1557 accessibility standards.

H. Enforcing the Rule

After grievances are filed with covered entities or complaints are filed with OCR, there are associated costs to investigate and resolve those grievances and complaints. We believe the following costs result from enforcement of the Section 1557 regulation:

- Costs to covered entities for modifying and implementing existing grievance procedures to cover grievances filed under Section 1557.
- Costs to OCR for reviewing and investigating complaints, monitoring

[145] Human Rights Campaign, *Corporate Equality Index, Rating American Workplaces on Lesbian, Gay, Bisexual and Transgender Equality, 30,* (2015), *available at http://www.hrc.org/campaigns/corporate-equality-index.*

[146] Using BLS occupation code 43–1011 and occupation code 11–1021 for the health insurance industry NAICS code 524114.

[147] State of California, Department of Insurance, Economic Impact Assessment Gender Nondiscrimination in Health Insurance. (Apr. 13, 2012).

[148] *Id.*

[149] *Id.* at 8.

[150] *Id.* at 6–7.

[151] *Id.* at 9. Insurers in California that established a premium surcharge to cover the City of San Francisco's expected claim costs eventually eliminated the additional premium because they found their cost assumptions were 15 times higher than actual claims generated.

corrective action plans or taking other enforcement actions against covered entities.

We now proceed to estimate the aggregate costs of these enforcement procedures. In the analysis below, we analyze the costs to covered entities separately from the costs to OCR.

1. Costs to Covered Entities

Federal civil rights laws that were in place before Section 1557 became effective apply to entities that receive Federal financial assistance. Entities subject to those laws are already required to have in place an established grievance procedure to address disability discrimination complaints and complaints of sex discrimination in education programs. It is anticipated that any additional costs that may be imposed by this regulation would potentially arise because of the expansion of the grievance process to cover all bases covered under Section 1557, including race, color, national origin, and age, as well as sex discrimination in health care. It is expected that this may lead to a slight increase in additional grievances being filed, and require increased time to investigate and resolve these additional grievances.

To compute the anticipated costs for covered entities to enforce the proposed regulation, we looked to OCR data. The current number of civil rights complaints filed annually with OCR is approximately 3,000. Since the passage of Section 1557, OCR's complaint workload has increased slightly; with somewhere in the range of 15–20 unique Section 1557 cases filed each year. Stemming from the sentinel effects from the enactment of the regulation, if we include another ten cases per year, we calculate an increase of 30 cases per year or 1% of the annual caseload of 3,000. We assume the incremental workload will be similar for affected entities and thus will be approximately 1%. We anticipate that within the first five years following the rule's enactment, complaints will increase, but eventually will drop off as covered entities modify their policies and practices in response to the proposed rule. Although we have data on OCR's caseload, we have no data on the caseload of affected covered entities. We ask for public comment on the assumption regarding increased caseload.

If we assume that as a result of promulgating the proposed regulation, a designated grievance official for the 58,550 covered entities with 15 or more employees had to devote an additional 1% of his or her time to investigating discrimination grievances, incremental costs (including fringe benefits and overhead) would be $118.7 million.

To arrive at this number we used the annual mean wage of $101,340 for medical and health service managers (occupation code 11–9111) and took 1%. We increased the amount by 100% to account for fringe benefits and overhead, and multiplied the value by the number of covered health entities that we estimate have 15 or more entities using 2012 US business census data.

It is important to consider the assumptions we made in estimating the costs to covered entities. We assumed that all entities would experience the same proportional increase in complaints filed. This may not be accurate. We expect most covered entities will comply with the regulation and not see an increase in complaints. However, because we lack data to enable us to pinpoint which entities will experience an increase, we are required to make a general assumption about all covered entities. As such, we anticipate the resultant cost estimate to be an overestimation of the new costs for addressing grievances filed against covered health entities. We ask for public comment on these costs and estimates.

The same incremental calculations apply to the workloads of State agencies and the officials working in these agencies. If we assume the same 1% increase in caseload and the average mid-level State official salary is $94,580 (including fringe benefits and overhead), we must multiply $94,580 by the number of State covered entities.[152] To arrive at the number of State covered entities we make the following assumptions:

- We assume that there are 53 Medicaid State agencies;
- We assume that there are 53 State health departments;
- We assume that each State and the District of Columbia has two State-run hospitals; and
- We assume that each of 3,143 counties has a county health department that provides direct health services (*e.g.,* immunization clinics) and is accountable to the State Health Department. We assume that each of the county health departments has a designated official for handling grievances.

The total number of State covered entities is 3,351. Multiplying $94,580 by 3,351 equals $316.9 million. One percent of this value equals $3.17 million.

2. Costs to OCR

We considered the various OCR enforcement costs together, based on OCR average salary data presented in its annual budgets. According to the FY 2016 President's Budget, $28,400,000 and 137 Full Time Equivalents (FTEs) were requested for Enforcement and Regional Operations, at a cost of approximately $201,000 per FTE. Of the 137 FTEs, approximately 40 FTEs spend 100% of their investigative time enforcing the civil rights laws.[153] If we make the same assumption we did above and assume the same 1% increase in caseload from the issuance of Section 1557, the anticipated increase in number of staff necessary would be approximately 0.4 of an FTE (1% of 40) and would cost approximately $80,400.

Summary of Cost and Phase-in

The table below summarizes the costs attributable to the proposed regulation that covered entities may incur following enactment of the final regulation. We assume that half of the training costs and changes to policies and procedures on the prohibition of discrimination on the basis of sex will be incurred in the first year and the second half will be expended in the second year. For covered entities that will be printing and distributing notices to their patients and policy holders, we assume that all of the estimated printing and distribution costs will be expended in the first year after the effective date of the rule. Due to the likelihood that applicable changes will need to be phased in, we assume one half of the annual projected costs for investigating discrimination complaints will be incurred during the first year and three quarters of the annual projected enforcement costs will be spent in the second year and the full amounts in the third through fifth years. Information collection requirements and paperwork burden costs would be incurred within the first year after the effective date of the final regulation.

[152] Based on the annual salary of Executive Secretary and Executive Administrative Assistant (Occupation code 43–6011 for Sector 99).

[153] This is based on an informal staff estimate.

TABLE 5—COST SUMMARY OF THE PROPOSED REGULATION FOLLOWING ENACTMENT OF THE FINAL RULE

[discounted 3% and 7% in millions]

	Year 1	Year 2	Year 3	Year 4	Year 5	Total/ Annualized *
Training (undiscounted)	191.4	191.4	0	0	0	382.8
Training (3%)	185.8	180.4	0	0	0	80.0
Training (7%)	173.7	157.6	0	0	0	80.8
Investigation (undiscounted)	59.3	89.0	118.7	118.7	118.7	504.3
Investigation (3%)	57.6	83.9	108.6	105.4	102.4	100.0
Investigation (7%)	53.8	73.3	88.6	80.4	73.0	90.0
Notice Publication (undiscounted)	4.8	0	0	0	0	4.8
Notice Publication (3%)	4.7	0	0	0	0	4.7
Notice Publication (7%)	4.4	0	0	0	0	4.4
Sex discrimination Policy and Procedure Changes (undiscounted)	23.7	23.7	0	0	0	47.5
Sex discrimination Policy and Procedure Changes (3%)	23.0	22.4	0	0	0	9.9
Sex discrimination Policy and Procedure Changes (7%)	21.5	19.5	0	0	0	10.0
Total (undiscounted)	279.2	304.1	118.7	118.7	118.7	939.4
Total (3%)	271.1	286.7	108.6	105.4	102.4	190.9
Total (7%)	253.4	250.4	88.6	80.4	73.0	162.82

* Discounted and annualized values take into account the cost of borrowing and paying back funds at hypothetical interest rates to simulate opportunity costs.

With this summary, we have completed our analysis the costs of the rule. Next, we examine the benefits that can be expected to accrue as a result of the proposed rule.

III. Benefits & Transfers

In enacting Section 1557 of the ACA, Congress recognized the benefits of equal access to health services and health insurance that all individuals should have, regardless of their race, color, national origin, age, or disability. Section 1557 brought together the rights to equal access that had been guaranteed under Title VI, the Age Act and Section 504. At the same time, Congress extended these protections and rights to individuals seeking access to health services and health insurance without discrimination on the basis of sex.

This proposed rule would implement the provisions of Section 1557. In most respects, the proposed rule clarifies existing obligations under existing authorities and we have noted in the cost analysis that we do not expect that covered entities would incur costs related to the clarification of those existing obligations in the proposed rule. However, we also noted that we expected that the prohibition of sex discrimination in the proposed rule would generate certain actions and other changes in behavior by covered entities and that these actions and changes would impose costs. These actions and other changes in behavior would also result in benefits.

The provisions prohibiting sex discrimination in the ACA increase the affordability and accessibility of health care for women and transgender individuals. However, despite the ACA improving access to health services and health insurance, many women and transgender individuals continue to experience discrimination in the health care context. This continued discrimination demonstrates the need for further clarification regarding the prohibition of discrimination on the basis of sex.

Prior to the enactment of the ACA, insurance companies were allowed to impose higher premiums on women or deny women coverage altogether. If issuers did cover women, they frequently did not cover many women's health services, including routine preventive and wellness services, such as pap smears or mammograms. Insurance premiums previously differed by sex, based on additional actuarial risk for females relative to males; with the ACA's requirement of equal premiums for both sexes, the payments associated with that risk are transferred from impacted females (who previously paid for that risk through higher premiums) to entities in society.

In the transgender community, a major barrier to receiving care is a concern over being refused medical treatment based on bias against them.[154] In a 2010 report, almost half of LGBT respondents reported suffering some form of discriminatory treatment by providers when receiving medical care, while 26.7% of transgender respondents reported that they were outright refused needed health care.[155] A 2008 survey revealed that 28% of transgender individuals reported being subject to harassment in medical settings and 50% reported having to teach their medical providers about transgender care.[156]

Covered entities' patient nondiscrimination policies often do not include gender identity. The 2014 Human Rights Campaign Healthcare Equality Index, which evaluates health care facilities' LGBT policies and practices, found that among the 640 hospitals it evaluated, 501 had patient nondiscrimination policies but of those only 257 had a patient nondiscrimination policy that included both the terms ''sexual orientation'' and ''gender identity.'' [157]

With respect to access to nondiscriminatory health insurance coverage, Durso, Baker and Cray cite interviews from their survey of the difficulties that LGBT individuals have experienced seeking insurance.[158] The *Out to Enroll Report: Key Lessons for LGBT Outreach and Enrollment under the Affordable Care Act* focuses on the

[154] *Lambda Legal, supra* note 134 at 12–13.

[155] *Id.* at 9–10.

[156] National Center for Transgender Equality and National Gay and Lesbian Task Force, Injustice at Every Turn: A Report of the national Transgender Discrimination Survey (2008). *available at http://www.thetaskforce.org/static_html/downloads/reports/reports/ntds_full.pdf.*

[157] *The Human Rights Campaign, supra* note 145, at 12.

[158] Laura E. Durso, Kellan Baker, and Andrew Cray, Center for American Progress Issue Brief: LGBT Communities and the Affordable Care Act Findings from a National Survey, (October 10, 2013), available at *http://www.preventionjustice.org/wp-content/uploads/2013/10/CAP-LGBT-Messaging-Research.pdf.*

lack of adequate training of Navigator staff when encountering LGBT individuals seeking access to the Health Insurance Marketplaces. A major complaint voiced was that Navigator staff were unaware of the multitude of discriminatory practices and policy restrictions in which issuers engage to deny or restrict coverage of transgender individuals, and that Navigator staff lacked basic knowledge of health issues that are unique to transgender individuals.[159] Almost 24% of LGBT individuals, including transgender individuals, have stated that a major motivator for seeking out new insurance options would be learning that plans cannot discriminate against them.[160]

Discrimination in the health care context leads to denials of adequate health care for individuals and increases in existing health disparities in underserved communities.[161] Individuals who have experienced discrimination in the health care context often postpone or do not seek much needed health care, which may lead to negative health consequences.[162] For example, LGBT health disparities include higher rates of mental health issues, including depression and suicide attempts, higher risk of HIV/AIDS, higher use of tobacco and other drugs, and higher risk of certain cancers, such as breast cancer, with some portion of the differential potentially attributable to barriers to health care.[163]

By prohibiting discrimination on the basis of sex, including sex stereotyping and gender identity, Section 1557 would result in more women and transgender individuals feeling secure in obtaining coverage and accessing health services. Since 2013, the uninsured rate for women has declined by 7.7 percentage points, resulting in nearly 7.7 million women gaining health insurance as of 2015.[164] Similarly, uninsured rates for LGBT individuals have dropped 8% since 2013, to approximately 20%.[165] While these declines in the rates of the uninsured are attributable to many factors, among these factors may be provisions in the ACA prohibiting discriminatory practices in insurance. We expect that issuance of the Section 1557 regulation could contribute to a reduction in the number of individuals who are uninsured, though the reduction would be much more modest.

The State of California, in an economic impact assessment of State practices prohibiting gender discrimination in health care, cites the following benefits:[166]

1. Reduced violence against affected individuals;
2. Improved worker safety and improved productivity at work for affected individuals;
3. Reduced depression and suicide attempts among the affected population; and
4. Overall declines in substance abuse, smoking and alcohol abuse rates, and improvements in mental health among treated individuals in LGBT populations who receive appropriate medical treatment.

Moreover, because discrimination contributes to health disparities, the prohibition of sex discrimination in health care under Section 1557 can help reduce health disparities. While it is not possible to quantify the benefits of the reduction in health disparities, the benefits would include more people receiving adequate health care, regardless of their sex, including gender identity.

The health and longevity benefits discussed above as potential effects of this rule can only occur if additional or higher-quality medical services are provided to affected individuals. These services would be associated with costs (which we lack data to estimate). As discussed in the earlier discussion of actuarial risk, to the extent that changes in insurance premiums do not alter how society uses its resources, then effects of the rule would be transfers between members of society, rather than social costs or benefits. In addition to women and transgender individuals, health service providers and the Federal government could also be recipients of these transfers. For example, in 2013, hospitals provided over $50 billion in uncompensated care to the uninsured, and the Federal government pays approximately 62% of uncompensated care.[167] HHS estimates that there was a $7.4 billion reduction in hospital uncompensated care costs attributed to ACA coverage expansions in 2014. Based on estimated coverage gains in 2014, uncompensated care costs are expected to continue to fall substantially following continued major insurance coverage expansions, including coverage expansions through the Health Insurance Marketplace.[168] While issuance of the Section 1557 regulation is not a factor in this projection, we believe that issuance of the Section 1557 regulation will likewise contribute to a decrease in payments by the Federal government for uncompensated care by promoting an increase in the number of individuals who have insurance when they receive care.

Aside from the specific benefits and transfers that women, transgender individuals, and the health care community can be expected to gain from the enactment of the regulation, there are more general benefits that are intangible and unquantifiable. These benefits derive from having a society that provides equal access to health care for all.

IV. Alternatives Considered

In the course of developing this regulation, the Department considered various alternatives. Some of those alternatives still under consideration are discussed in the preamble, and the Department invites public comment on those options. A discussion of alternatives considered cannot cover all alternatives considered by the Department. The following alternatives are meant to be a representative sample to show how burden reduction was a major consideration in constructing the standards in this regulation.

OCR considered requiring covered entities to provide separate notices, covering separate content, *e.g.,* separate notices on the requirements concerning providing meaningful access for individuals with limited English proficiency; requirements concerning effective communication for individuals with disabilities; and policies on

[159] Out2Enroll, Key Lessons for LGBT Outreach and Enrollment under the Affordable Care Act, 24, (July 24, 2014), available at *http://out2enroll.org/key-lessons-for-lgbt-outreach-enrollment/.*

[160] Center for American Progress, *supra* note 158.

[161] See Bruce G. Link and Jo C. Phelan, Conceptualizing Stigma, 27 Ann. Rev. Sociology 363, 371, 378–380 (2001) (discussing the consequences of stigmatization, including health disparities); Alexandra Brandes, The Negative Impact of Stigma, Discrimination, and the Health Care System on the Health of Gender and Sexual Minorities, 23 Tul. J. L. & Sexuality 155, 156, 160–161 (2014) (discussing how discrimination leads to health disparities); Kellan E. Baker, Center for American Progress, Open Doors for All, 1–2 (2015) (discussing how discrimination exacerbates LGBT health disparities).

[162] Alexandra Brandes, The Negative Impact of Stigma, Discrimination, and the Health Care System on the Health of Gender and Sexual Minorities, 23 Tul. J. L. & Sexuality 155, 160 (2014) (stating ''Bias from health care professionals reduces the likelihood that LGBTQ individuals will seek and receive quality care.'').

[163] Center for American Progress, *supra* note 158 at 2.

[164] ASPE Issue Brief, *supra* note 133 at 1–4.

[165] Kellan Baker, Laura E. Durso, and Andrew Cray, Center for American Progress, Moving the Needle, The Impact of the Affordable Care Act on LGBT Communities, 3 (November 2014), *available at https://www.americanprogress.org/issues/lgbt/report/2014/11/17/101575/moving-the-needle/.*

[166] California Department of Insurance, *supra* note 147, at 11.

[167] *ASPE Issue Brief, supra* note 133.

[168] ASPE Issue Brief: Insurance Expansion, Hospital Uncompensated Care, and the Affordable Care Act (March 23, 2015), *available at: http://aspe.hhs.gov/sites/default/files/pdf/83961/ib_UncompensatedCare.pdf.*

nondiscrimination. To reduce the burden on covered entities, the Department rejected this option in favor of a comprehensive single notice requirement.

OCR decided to further reduce the burden imposed on covered entities by the notice requirement by providing that it would develop and provide covered entities with a sample notice. OCR allows covered entities flexibility in complying with the proposed notice requirement by giving covered entities the option of using the sample notice or developing their own notice. Although OCR considered requiring covered entities to post the notice in 15 languages (Spanish (or Spanish Creole), Chinese, Vietnamese, Korean, Tagalog, Russian, Arabic, French Creole, French (including Patois, Cajun), Portuguese (or Portuguese Creole), Polish, Japanese, Italian, German, and Persian (Farsi)), it rejected that option. Instead, it will translate the notice into 15 languages and provide covered entities the discretion to post one or more of the translated notices, should they so choose. We believe that making translated notices readily available to covered entities maximizes efficiency and economies of scale, provides flexibility while minimizing burden, and helps provide greater access for beneficiaries and consumers. Additionally, although OCR considered requiring covered entities to create their own taglines in the top 15 national languages spoken by individuals with LEP, it rejected that option. Instead, OCR will provide covered entities the 15 translated taglines. As the tagline requirement for the covered entities only requires the cost of printing and posting, this burden is expected to be minimal.

OCR considered not providing training materials to covered entities on the requirements of the regulation. However, in order to reduce costs and burden, OCR is providing these materials which will reduce covered entities' costs of developing training materials from $500 per entity to $125 per entity, saving an estimated $106 million. Entities are assumed to bear one quarter of the total costs. These costs result from paying the presenters who will run the training sessions, providing classroom space, and supplementing the OCR provided training materials (should they choose to do so).

OCR considered remaining silent on covered entities' obligations to comply with Section 1557's prohibition of national origin discrimination as it affects individuals with LEP. We rejected this approach because we were concerned that the Department's silence would create ambiguity about covered entities' obligations to individuals with LEP and could jeopardize the access of individuals with LEP to covered entities' health programs and activities. Options for addressing the prohibition of national origin discrimination as it affects individuals with LEP are discussed in the preamble to the proposed rule.

OCR considered a regulatory scheme requiring covered entities to provide meaningful access to each individual with LEP by providing effective language assistance services, at no cost, unless such action would result in an undue burden or fundamental alteration. OCR also considered requiring covered entities of a certain type or size to have enhanced obligations to provide language assistance services. Such enhanced obligations could include providing a predetermined range of language assistance services in certain non-English languages that met defined thresholds. A covered entity that was not of a certain type or size still would be required to provide meaningful access to each individual with LEP in its health programs and activities, but the covered entity would not have to provide a predetermined range of language assistance services in certain non-English languages. OCR also explored applying the threshold requirement to standardized vital documents on a national, State, or county level as well as specific to a covered entity's geographic service area.

The strengths of these alternate regulatory schemes include limited obligations for small businesses providing health programs or activities and defined standards for larger entities. The costs of these approaches include the complexity of the regulatory scheme and the potential burden on the covered entities of a certain type or size that would have enhanced applications. OCR determined these costs outweighed the benefits at this time. As stated in the preamble, the Department invites public comment on these options.

OCR considered drafting new provisions addressing effective communication (apart from communication through electronic and information technology) with individuals with disabilities, but instead is incorporating provisions of the regulation implementing Title II of the ADA to ensure consistency for covered entities and potentially reduce burden by limiting resources spent on training and modification of policies and procedures.

Options regarding communication through electronic and information technology are discussed in the preamble to the regulation. Regarding the accessibility requirements under the proposed regulation, OCR considered two alternatives: (1) Clarifying the scope of the requirements by defining whether the standards adopted apply only to access to covered entities' Web sites or other means of electronic and information technology; and (2) updating the NPRM's current standards for determining accessibility to include newer functional standards such as the Web Content Accessibility Guidelines adopted by the World Wide Web Consortium or standards under Section 508. While these alternatives could potentially increase the burden on recipients of Federal financial assistance and State-based Marketplaces, they also would offer clarity to covered entities and would help enhance access for individuals with disabilities.

In the area of compliance, OCR considered having one set of procedures for all compliance activities involving recipients of Federal financial assistance and State-based Marketplace entities. Instead, OCR decided to adopt the unique Age Act procedures [169] for age-related compliance activities under Section 1557 because Age Act compliance activities and Section 1557 compliance activities regarding age discrimination are likely to substantially overlap.

With regard to other areas of compliance, OCR considered developing a separate set of procedures for Section 1557 compliance activities involving HHS health programs and activities, but decided to largely adopt the existing procedures for disability compliance activities involving HHS health programs and activities (with some enhancement) to improve efficiencies for OCR and the HHS health programs and activities covered by Section 1557.

V. Unfunded Mandates Reform Act of 1995

Section 202 of the Unfunded Mandates Reform Act of 1995 requires that agencies assess anticipated costs and benefits before issuing any rule that includes a Federal mandate that could result in expenditure in any one year by State, local, or tribal governments, in the aggregate, or by the private sector, of $100 million in 1995 dollars, updated annually for inflation. In 2015, that

[169] The Age Act procedures, for example, require mediation of all age discrimination complaints, and exhaustion of administrative remedies prior to the filing of a civil lawsuit.

threshold level is approximately $144 million.

The Unfunded Mandates Reform Act does not address the total cost of a final rule. Rather, it focuses on certain categories of cost, mainly those ''Federal mandate'' costs resulting from: (1) Imposing enforceable duties on State, local, or tribal governments, or on the private sector; or (2) increasing the stringency of conditions in, or decreasing the funding of, State, local, or tribal governments under entitlement programs.

Our impact analysis shows that burden associated with training staff working for covered entities will be spread widely across health care entities, State and local governmental entities and a substantial number of health insurance issuers. The analysis estimates the unfunded burden will be about $383 million in one-time training costs. We project that for the first few years following enactment of the final rule, private sector costs for investigating discrimination complaints may amount to $119 million per year. Within the first five years following the rule's enactment, we anticipate complaints to increase, but eventually to drop off as covered entities modify their policies and practices in response to the proposed rule.

As we explain in the RIA, we believe there will be benefits gained from the enactment of this regulation in the form of reduction in discrimination based on race, color, national origin, sex, age, and disability, the improvement in the quality of care underserved communities will receive.

VI. Executive Order 13132: Federalism

As required by Executive Order 13132 on Federalism, the Department has examined the effects of provisions in the proposed regulation on the relationship between the Federal government and the States. The Department has concluded that the proposed regulation does have Federalism implications but preempts State law only where the exercise of State authority directly conflicts with the exercise of Federal authority under the Federal statute.

The proposed regulation attempts to balance State autonomy with the necessity to create a Federal benchmark that will provide a uniform level of nondiscrimination protection across the country. The proposed regulation restricts regulatory preemption of State law to the minimum level necessary to achieve the objectives of the underlying Federal statute, Section 1557 of the ACA.

It is recognized that the States generally have laws that relate to nondiscrimination against individuals on a variety of bases. State laws continue to be enforceable, unless they prevent application of the proposed rule. The proposed rule explicitly provides that it is not to be construed to supersede State or local laws that provide additional protections against discrimination on any basis articulated under the regulation. Provisions of State law relating to nondiscrimination that are ''more stringent'' than the proposed Federal regulatory requirements or implementation specifications will continue to be enforceable.

Section 3(b) of Executive Order 13132 recognizes that national action limiting the policymaking discretion of States will be imposed only where there is constitutional and statutory authority for the action and the national activity is appropriate in light of the presence of a problem of national significance. Discrimination issues in relation to health care are of national concern by virtue of the scope of interstate health commerce. The ACA's provisions reflect this position.

Section 3(d)(2) of the Executive Order 13132 requires that where possible, the Federal Government defer to the States to establish standards. Title I of the ACA authorized the Secretary to promulgate regulations to implement Section 1557, and we have done so accordingly.

Section 4(a) of Executive Order 13132 expressly contemplates preemption when there is a conflict between exercising State and Federal authority under a Federal statute. Section 4(b) of the Executive Order authorizes preemption of State law in the Federal rule making context when ''the exercise of State authority directly conflicts with the exercise of Federal authority under the Federal statute.'' The approach in this regulation is consistent with these standards in the Executive Order in superseding State authority only when such authority is inconsistent with standards established pursuant to the grant of Federal authority under the statute.

Section 6(b) of Executive Order 13132 includes some qualitative discussion of substantial direct compliance costs that State and local governments would incur as a result of a proposed regulation. We have determined that the costs of the proposed rule would not impose substantial direct compliance costs on State or local governments. We have considered the cost burden that this proposed rule would impose on State and local health care and benefit programs, and estimate State and local government costs will be in the order of $18.5 million in the first two years of implementation. The $18.5 million represents the sum of the costs of training State workers and enforcement costs attributable to State agencies analyzed above.

VII. Regulatory Flexibility Act

The RFA requires agencies that issue a regulation to analyze options for regulatory relief of small businesses if a rule has a significant impact on a substantial number of small entities. The RFA generally defines a ''small entity'' as:

(1) A proprietary firm meeting the size standards of the Small Business Administration (SBA);

(2) A nonprofit organization that is not dominant in its field; or

(3) A small government jurisdiction with a population of less than 50,000 (States and individuals are not included in the definition of ''small entity'').

HHS uses as its measure of significant economic impact on a substantial number of small entities a change in revenues of more than 3% for 5% or more of affected small entities.

If we judge that a rule would have a significant impact on a substantial number of small entities, we will consider alternatives to reduce the burden. To accomplish our task, we must first identify all the small entities that may be impacted, and then evaluate whether the economic burden we determined in the RIA represents a significant economic impact.

A. Entities That Will Be Affected

HHS has traditionally classified most health care providers as small entities even though some nonprofit providers would not meet the definition of ''small entity'' were they proprietary firms. Nonprofit entities are small if they are independently owned and operated and are not dominant in their fields.

The CMS Provider of Service file has indicators for profit and nonprofit entities, but these have proven to be unreliable. The Census data identifies firms' tax status by profit and non-profit status but only reports revenues and does not report them by the profit and non-profit status of the entity.

1. Physicians

One class of providers we do not automatically classify as small businesses is physician practices. Physician practices are businesses and therefore are ''small'' if they meet the SBA's definition. The current size standard for physicians (excluding mental health specialists)—North American Industry Classification System code 62111—is annual receipts

of less than $11 million.[170] Using the Census data showing the number of firms, employees and payroll, we selected physicians that reported fewer than 20 employees as the top end for small physician offices. This equaled 17,855 entities or 9.4% of all physician offices defined as ''large.'' This left 171,000 offices or 90% as ''small.''[171]

2. Pharmacies

Pharmacies also are businesses, and the size standard for them is annual receipts of less than $27.5 million. According to U.S. Census Statistics of U.S. Businesses, there are 18,852 pharmacy and drug store firms (North American Industry Classification System code 44611). Because of the lack of revenue or receipt data for pharmacies, we are unable to estimate the number of small pharmacies based on the SBA size standard. However, using the number of employees taken from the Statistics of U.S. Businesses as a proxy for revenues, the data is divided by number of employees per firm and shows the number of employers with fewer than 20 employees and those with more than 20 employees.[172] The number of firms with fewer than 20 employees is 16,520 and represents 88% of the total number of pharmacy firms. It seemed reasonable to assume that firms with fewer than 20 employees satisfy the SBA size standard and thus we accepted that the number of small pharmacy firms equaled 16,520. As with the number of small physician offices, our method can only identify the minimum number of ''small'' pharmacies that meet the SBA size standard. We cannot determine the actual number of ''small'' pharmacies.

3. Health Insurance Issuers

Another class of covered entities that are business enterprises is health insurance issuers. The SBA size standard for health insurance issuers is annual receipts of $38.5 million. Although the Blue Cross/Blue Shield companies that operate in some markets are organized as nonprofit entities, they often are large enough so as to not meet the definition of ''small entity.''

Unfortunately, we cannot use the Census revenue data for estimating the number of small health insurance issuers because the Census data combines life and health insurance. Substituting costs for revenues allows us to obtain a rough estimate of the number of large insurance issuers, realizing that cost will probably be less than revenues, thus giving us a lower count of large issuers. Using the National Health Expenditure for 2013, net cost of health insurance equaled $173.6 billion. However, the 2012 Census data report a total of 815 health insurance issuers. Dividing the $174 billion in costs by the number of insurance issuers reported in the census tables yields average costs of over $213 million, which means that average annual revenues per issuer exceeds $213 million. We conclude, therefore, that there are almost no small insurance issuers. The above analysis comports with the conclusion CMS published in the Health Insurance Web Portal Requirements (75 FR 24481, May 5, 2010).

4. Local Government Entities

We also exclude local governmental entities from our count of small entities because we lack the data to classify them by populations of fewer than 50,000. The following table shows the number of small covered entities we estimate may be affected by the proposed rule.

TABLE 6—SMALL COVERED ENTITIES

NAIC	Entity type	Number of firms
62142	Outpatient mental health and substance abuse centers	4,987
62141	HMO medical centers	104
62142	Kidney dialysis centers	492
62143	Freestanding ambulatory surgical and emergency centers	4,121
621498	All Other Outpatient Care Centers	5,399
6215	Medical and Diagnostic Laboratories	7,958
6216	Home health care services	21,668
6219	All other ambulatory health care services	6,956
62321	Residential mental retardation facilities	6,225
62199	General medical and surgical hospitals	3,067
621991	Psychiatric and substance abuse hospitals	411
6221	Specialty (except psychiatric and substance abuse) hospitals	373
6231	Nursing Care Facilities (Skilled Nursing Facilities)	8,623
44611	Pharmacies and drug stores	16,520
6211	Offices of physicians	171,000
	Navigator grantees	92
	TOTAL Small entities	258,176

B. Whether the Proposed Rule Will Have a Significant Economic Impact on Covered Small Entities

To determine the economic impact of the proposed rule, we divide the costs that small entities will bear by the number of small affected entities. We examine the costs we identified for training, enforcement, and complying with the notice requirement and adjust those costs to reflect only the costs that small entities will incur.

1. Training

To remove the costs for training for large entities, we must remove both the large entities and their associated workforce. We removed 17,855 physician firms with associated training costs of $60.8 million and 2,332 pharmacies with associated training costs of $11.4 million. Also, we removed costs borne by the 180 health insurance issuers we identified as

[170] U.S. Small Business Administration (SBA), Table of Small Business Size Standards Matched to North American Industry Classification System Codes. Small Business Administration, (June, 2014), *available at https://www.sba.gov/sites/default/files/Size_Standards_Table.pdf.*

[171] Physician practices may earn more than $11 million per year and that would reduce the number of ''large'' practices to be excluded from the analysis. But as we will later show, large practices will have proportionally larger workforce staff that must be excluded from the analysis.

[172] U.S. Census Bureau, Statistics of U.S. Businesses, *supra* note 120.

participating in the Federally-facilitated Marketplaces, with training costs of about $3.26 million. Also, removing State training costs from our computations reduces the costs allocated to small entities by $13.9 million.

The total cost burden of the ''large'' entities we can identify (including cost of preparing materials and employee time) amounts to $89.4 million.[173] Thus the estimated burden we are proposing to place on small entities for training equals $293 million. Dividing this amount by the number of small entities in Table 6 gives an average burden of $1,135.

2. Enforcement

We also identified costs for investigating discrimination complaints that covered entities may incur following enactment of the final rule in the enforcement section in this analysis. The total amount ascribed to investigating discrimination complaints for covered health care entities with 15 or more employees is estimated to be $118.7 million per year over five years following final rule enactment. As we noted in the enforcement analysis, for purposes of the analysis, we assumed a uniform distribution of complaints across all covered entities.

To determine costs for investigating discrimination complaints for small entities, we divided the cost attributed to health care covered entities. Dividing health care covered entity investigation costs of $118.7 million by the approximately 58,500 health care covered entities with 15 or more employees who are required to have grievance procedures under the proposed rule, yielding a cost per entity of $2,029.

[173] We have removed the training and preparation costs for large and small issuers, equaling $3,251,158. The amount includes training of State medical staffs ($13,872,314), large physician offices ($38,860,424), and large pharmacy firms ($9,541,260). The amount of State medical staff training costs is 100%. Large physician office training costs are 68.3% of medical staff training costs based on the ratio of employees employed in large and small offices. The costs of medical staff training in large pharmacy firms is 85.7% and is similarly based on the ratio of employees employed in large and small firms.

3. Notice

We also examined the cost for covered entities of printing, translating, and posting new notices as required under this proposed regulation. The estimated cost for printing and distributing notice and tag lines for health care providers is approximately $4.8 million. Dividing this amount by the 278,565 total health care providers equals $17 per entity.

4. Revising Policies and Procedures to Prohibit Discrimination on the Basis of Sex

In the analysis of the cost for providers to revise their policies and procedures to conform to the prohibition of discrimination on the basis of sex, we estimate that 75% of total health care entities, or 208,700, would incur a cost of approximately $47.5 million. To arrive at the cost per entity, we divide the cost by the 208,700 health care entities, which equals $227 per entity.

5. Overall Burden on Small Entities

To estimate the overall burden cost on small entities, we must add training costs ($1,135), the cost to an entity to investigate a complaint of discrimination ($2,029), the costs for printing and distributing notices and tag lines ($17), and the cost for providers to revise their policy and procedures for prohibiting sex discrimination ($227). The total estimated overall burden of the proposed rule on small entities is approximately $3,409.

The definition of a small entity varies with its North American Industry Classification System code; for physicians, the SBA defines the threshold revenues as up to $11 million, for pharmacies up to $25 million, and for health issuers up to $38.5 million. An average cost of $3,409 represents a de minimis percentage of their revenues and clearly less than the 3% standard that is set up under the RFA standards for significant impact. Furthermore we believe that fewer than 5% of all small entities will experience a burden of greater than 3% of their revenues. Ambulatory health care services facilities (North American Industry Classification System 621), for example, are small entities with an average of 13 employees and revenue of $1.7 million based on 2012 reported data for employees of 6.4 million and total revenues of $825.7 million for 485,235 firms.[174] In addition, the majority of the costs associated with this rule are proportional to the size of entities, meaning that even the smallest of the affected entities are unlikely to face a substantial impact. Thus, we would not consider this proposed regulation a significant burden on a substantial number of small entities, and, therefore, the Secretary proposes to certify that the proposed rule will not have a significant impact on a substantial number of small entities.

VIII. Conclusion

For the most part, because this regulation is consistent with existing standards applicable to the covered entities, the new burdens created by its issuance are minimal. The major impacts are in the areas of voluntary training and enforcement where increased caseloads pose incremental costs on covered entities. It is possible, if broader options that extend existing civil rights requirements beyond their current scope were adopted after public comment in a final rule, that the burdens estimated in this RIA would increase. However, the rule as currently written does not include such expansions and therefore minimizes the imposition of new burdens. Nevertheless, it is still a major rule with approximately $383 million in training costs over a two-year period and another $122 million in increased annual enforcement costs. We also account for printing notice and tagline costs of $5 million, and costs to revise policies and procedures of $48 million, for a total of $558 million. This RIA was organized and designed to explain the origin of these cost impacts to allow for meaningful public comment.

[174] U.S. Census Bureau, Statistics of U.S. Businesses. All sectors: Geographic Area Series: Economy-Wide Key Statistics: 2012: available at: *http://factfinder.census.gov/faces/tableservices/jsf/pages/productview.xhtml?pid=ECN_2012_US_00A1&prodType=table.*

TABLE 7—ACCOUNTING STATEMENT

Accounting Statement				
Category	Primary Estimate	Low Estimate	High Estimate	Source
BENEFITS				
Qualitative Benefits	• Potential health improvements and longevity extensions as a result of reduced barriers to medical care for transgender individuals.			RIA
COSTS (millions)				
Annualized monetized		Covered entities train 40% of their employees on the new regulations	Covered entities train 60% of their employees on the new regulations	
3%	190.9	174.9	206.9	RIA
7%	162.8	148.4	177.3	RIA
Non-quantified costs	Costs of increased provision of health care services as a result of reduced barriers to access for transgender individuals.			RIA
Transfers	Health insurance premium reductions for affected women, with offsetting increases for other premium payers in affected plans.			RIA
Effects on State & Local Governments	$18.5 million costs in the first 2 years (training + enforcement)			RIA
Effects on Small Entities	Average $3,409/small entity			RFA

List of Subjects in 45 CFR Part 92

Administrative practice and procedure, Civil rights, Discrimination, Elderly, Health care, Health facilities, Health insurance, Health programs and activities, Individuals with disabilities, Nondiscrimination, Reporting and recordkeeping requirements, Sex discrimination.

For the reasons set forth in the preamble, the Department of Health and Human Services proposes to add 45 CFR part 92 as follows:

PART 92—NONDISCRIMINATION ON THE BASIS OF RACE, COLOR, NATIONAL ORIGIN, SEX, AGE, OR DISABILITY IN HEALTH PROGRAMS OR ACTIVITIES RECEIVING FEDERAL FINANCIAL ASSISTANCE AND HEALTH PROGRAMS OR ACTIVITIES ADMINISTERED BY THE DEPARTMENT OF HEALTH AND HUMAN SERVICES OR ENTITIES ESTABLISHED UNDER TITLE I OF THE PATIENT PROTECTION AND AFFORDABLE CARE ACT

Subpart A—General Provisions

Sec.

92.1 Purpose and effective date.
92.2 Application.
92.3 Relationship to other laws.
92.4 Definitions.
92.5 Assurances required.
92.6 Remedial action and voluntary action.
92.7 Designation of responsible employee and adoption of grievance procedures.
92.8 Notice requirement.

Subpart B—Nondiscrimination Provisions

92.101 Discrimination prohibited.

Subpart C—Specific Applications to Health Programs and Activities

92.201 Meaningful access for individuals with limited English proficiency.
92.202 Effective communication for individuals with disabilities.
92.203 Accessibility standards for buildings and facilities.
92.204 Accessibility of electronic and information technology.
92.205 Requirement to make reasonable modifications.
92.206 Equal program access on the basis of sex.
92.207 Nondiscrimination in health-related insurance and other health-related coverage.
92.208 Employer liability for discrimination in employee health benefit programs.
92.209 Nondiscrimination on the basis of association.

Subpart D—Enforcement

92.301 Enforcement mechanisms.
92.302 Procedures for health programs and activities conducted by recipients and State-based Marketplaces.
92.303 Procedures for health programs and activities administered by the Department.
Appendix A to Part 92—Sample Notice Informing Individuals about Nondiscrimination and Accessibility Requirements
Appendix B to Part 92—Sample Tagline Informing Individuals with Limited English Proficiency of Language Assistance Services

Authority: 42 U.S.C. 18116, 5 U.S.C. 301.

Subpart A—General Provisions

§ 92.1 Purpose and effective date.

The purpose of this part is to implement Section 1557 of the Patient Protection and Affordable Care Act (42 U.S.C. 18116), which prohibits discrimination on the basis of race, color, national origin, sex, age, or disability in certain health programs and activities. Section 1557 provides that, except as provided in Title I of the Patient Protection and Affordable Care Act (ACA), an individual shall not, on the grounds prohibited under Title VI of the Civil Rights Act of 1964, Title IX of the Education Amendments of 1972, the Age Discrimination Act of 1975, or Section 504 of the Rehabilitation Act of 1973, be excluded from participation in, be denied the benefits of, or be subjected to discrimination under any

health program or activity, any part of which is receiving Federal financial assistance or under any program or activity that is administered by an Executive Agency or any entity established under Title I of the ACA. This part applies to health programs or activities administered by recipients of Federal financial assistance from the Department, Title I entities that administer health programs or activities, and Department-administered health programs or activities. The effective date of this part shall be [60 DAYS AFTER DATE OF PUBLICATION OF THE FINAL RULE].

§ 92.2 Application.

(a) Except as provided otherwise in this part, this part applies to every health program or activity, any part of which receives Federal financial assistance administered by the Department; every health program or activity administered by the Department; and every health program or activity administered by a Title I entity.

(b) Limitations:

(1) Exclusions to the application of the Age Discrimination Act of 1975, as set forth at 45 CFR 91.3(b)(1), apply to claims of discrimination based on age under Section 1557 or this part.

(2) [Reserved]

§ 92.3 Relationship to other laws.

(a) *Rule of interpretation.* This part shall not be construed to apply a lesser standard for the protection of individuals from discrimination than the standards applied under Title VI of the Civil Rights Act of 1964, Title IX of the Education Amendments of 1972, Section 504 of the Rehabilitation Act of 1973, the Age Discrimination Act of 1975, or the regulations issued pursuant to those laws.

(b) *Other laws.* Nothing in this part shall be construed to invalidate or limit the rights, remedies, procedures, or legal standards available to individuals under Title VI of the Civil Rights Act of 1964, Title VII of the Civil Rights Act of 1964, the Architectural Barriers Act of 1968, Title IX of the Education Amendments of 1972, Sections 504 or 508 of the Rehabilitation Act of 1973, the Age Discrimination Act of 1975, the Americans with Disabilities Act of 1990, as amended by the Americans with Disabilities Act Amendments Act of 2008, or other Federal laws or to supersede State or local laws that provide additional protections against discrimination on any basis described in § 92.1.

§ 92.4 Definitions.

As used in this part, the term—

1991 Standards means the 1991 ADA Standards for Accessible Design, published at Appendix A to 28 CFR part 36 on July 26, 1991, and republished as Appendix D to 28 CFR part 36 on September 15, 2010.

2010 Standards means the 2010 ADA Standards for Accessible Design, as defined at 28 CFR 35.104.

ACA means the Patient Protection and Affordable Care Act (Pub. L. 111–148, as amended by the Health Care and Education Reconciliation Act of 2010, Pub. L. 111–152; 42 U.S.C. 18001 *et seq.*).

ADA means the Americans with Disabilities Act of 1990 (Pub. L. 101–336; 42 U.S.C. 12101 *et seq.*), as amended.

Age means how old an individual is, or the number of elapsed years from the date of an individual's birth.

Age Act means the Age Discrimination Act of 1975 (Title III of Pub. L. 94–135; 42 U.S.C. 6101 *et seq.*), as amended.

Applicant means an individual who applies to participate in a health program or activity.

Auxiliary aids and services include:

(1) Qualified interpreters on-site or through video remote interpreting (VRI) services, as defined in 28 CFR 35.104, 36.303(b); note takers; real-time computer-aided transcription services; written materials; exchange of written notes; telephone handset amplifiers; assistive listening devices; assistive listening systems; telephones compatible with hearing aids; closed caption decoders; open and closed captioning, including real-time captioning; voice, text, and video-based telecommunication products and systems, text telephones (TTYs), videophones, and captioned telephones, or equally effective telecommunications devices; videotext displays; accessible electronic and information technology; or other effective methods of making aurally delivered information available to individuals who are deaf or hard of hearing;

(2) Qualified readers; taped texts; audio recordings; Braille materials and displays; screen reader software; magnification software; optical readers; secondary auditory programs; large print materials; accessible electronic and information technology; or other effective methods of making visually delivered materials available to individuals who are blind or have low vision;

(3) Acquisition or modification of equipment and devices; and

(4) Other similar services and actions.

Covered entity means:

(1) An entity that operates a health program or activity, any part of which receives Federal financial assistance;

(2) An entity established under Title I of the ACA that administers a health program or activity; and

(3) The Department.

Department means the U.S. Department of Health and Human Services.

Director means the Director of the Office for Civil Rights (OCR) of the Department.

Disability means, with respect to an individual, a physical or mental impairment that substantially limits one or more major life activities of such individual; a record of such an impairment; or being regarded as having such an impairment, as defined and construed in the Rehabilitation Act, at 29 U.S.C. 705(9)(B), which incorporates the definition of disability in the ADA Amendments Act of 2008 (P.L. 110–325; 42 U.S.C. 12102.), as amended. Where this part cross-references regulatory provisions that use the term ''handicap,'' ''handicap'' means ''disability'' as defined in this section.

Electronic and information technology includes information technology and any equipment or interconnected system or subsystem of equipment that is used in the creation, conversion, or duplication of data or information.

(1) The term electronic and information technology includes, but is not limited to, telecommunications products (such as telephones), information kiosks and transaction machines, internet sites, multimedia, and office equipment such as copiers and fax machines.

(2) The term does not include any equipment that contains embedded information technology that is used as an integral part of the product, but the principal function of which is not the acquisition, storage, manipulation, management, movement, control, display, switching, interchange, transmission, or reception of data or information. For example, HVAC (heating, ventilation, and air conditioning) equipment such as thermostats or temperature control devices, and medical equipment where information technology is integral to its operation, are not electronic and information technology as defined in this part.

Employee health benefit program means:

(1) Health benefits coverage or health insurance provided to employees and/or their dependents established, operated, sponsored or administered by, for, or on

behalf of one or more employers, whether provided or administered by entities including but not limited to an employer, group health plan (as defined in the Employee Retirement Income Security Act of 1974 (ERISA, at 29 U.S.C. 1191(a)), third party administrator, or health insurance issuer.

(2) An employer provided or sponsored wellness program;

(3) An employer-provided health clinic; or

(4) Long term care coverage or insurance provided or administered by an employer, group health plan, third party administrator, or health insurance issuer.

Federal financial assistance. (1) Federal financial assistance means any grant, loan, credit, subsidy, contract (other than a procurement contract but including a contract of insurance), or any other arrangement by which the Federal government provides or otherwise makes available assistance in the form of:

(i) Funds;

(ii) Services of Federal personnel; or

(iii) Real and personal property or any interest in or use of such property, including:

(A) Transfers or leases of such property for less than fair market value or for reduced consideration; and

(B) Proceeds from a subsequent transfer or lease of such property if the Federal share of its fair market value is not returned to the Federal government.

(2) Federal financial assistance provided or administered by the Department includes all tax credits under Title I of the ACA, as well as payments, subsidies, or other funds extended by the Department to any entity providing health insurance coverage for payment to or on behalf of an individual obtaining health insurance coverage from that entity or extended by the Department directly to such individual for payment to any entity providing health insurance coverage.

Federally-facilitated Marketplaces means the same as ''Federally-facilitated Exchange'' defined in 45 CFR 155.20.

Gender identity is an individual's internal sense of gender, which may be different from that individual's sex assigned at birth. The way an individual expresses gender identity is frequently called ''gender expression,'' and may or may not conform to social stereotypes associated with a particular gender. A transgender individual is an individual whose gender identity is different from the sex assigned to that person at birth; an individual with a transgender identity is referred to in this part as a transgender individual.

Health Insurance Marketplace means the same as ''Exchange'' defined in 45 CFR 155.20.

Health program or activity means the provision or administration of health-related services or health-related insurance coverage and the provision of assistance to individuals in obtaining health-related services or health-related insurance coverage. For an entity principally engaged in providing or administering health services or health insurance coverage, all of its operations are considered part of the health program or activity, except as specifically set forth otherwise in this part. Such entities include a hospital, health clinic, group health plan, health insurance issuer, physician's practice, community health center, nursing facility, residential or community-based treatment facility, or other similar entity. A health program or activity also includes all of the operations of a State Medicaid program.

HHS means the U.S. Department of Health and Human Services.

Individual with a disability means any individual who has a disability as defined, for the purpose of Section 504 of the Rehabilitation Act of 1973, at 29 U.S.C. 705(20)(B)–(F), as amended. Where this part cross-references regulatory provisions applicable to a ''handicapped individual,'' ''handicapped individual'' means ''individual with a disability'' as defined in this section.

Individual with limited English proficiency means an individual whose primary language for communication is not English and who has a limited ability to read, write, speak, or understand English.

Language assistance services may include, but are not limited to:

(1) Oral language assistance, including interpretation in non-English languages provided in-person or remotely by a qualified interpreter, and bilingual or multilingual staff competent to communicate, in non-English languages using any necessary specialized vocabulary, directly with individuals with limited English proficiency;

(2) Written translation of documents and Web sites into languages other than English; and

(3) Taglines.

On the basis of sex includes, but is not limited to, on the basis of pregnancy, false pregnancy, termination of pregnancy, or recovery therefrom, childbirth or related medical conditions, sex stereotyping, or gender identity.

Qualified individual with a disability means, with respect to a health program or activity, an individual with a disability who, with or without reasonable modifications to policies, practices, or procedures, the removal of architectural, communication, or transportation barriers, or the provision of auxiliary aids and services, meets the essential eligibility requirements for the receipt of aids, benefits, or services offered or provided by the health program or activity.

Qualified interpreter. (1) Qualified interpreter means an interpreter who adheres to generally accepted interpreter ethics principles, including client confidentiality, and who, via a remote interpreting service or an on-site appearance, satisfies at least one of the following paragraphs:

(i) Is able, for an individual with a disability, to interpret effectively, accurately, and impartially, both receptively and expressively, using any necessary specialized vocabulary, and/or;

(ii) Has demonstrated proficiency in, and has above average familiarity with speaking or understanding, both spoken English and at least one other spoken language; and is able, for an individual with limited English proficiency, to interpret effectively, accurately, and impartially, both receptively and expressly, to and from such language(s) and English, using any necessary specialized vocabulary.

(2) For an individual with a disability, qualified interpreters can include, for example, sign language interpreters, oral transliterators (individuals who represent or spell in the characters of another alphabet), and cued-language transliterators (individuals who represent or spell by using a small number of handshapes).

Recipient means any State or its political subdivision, or any instrumentality of a State or its political subdivision, any public or private agency, institution, or organization, or other entity, or any individual, to whom Federal financial assistance is extended directly or through another recipient and which operates a health program or activity, including any subunit, successor, assignee, or transferee of a recipient.

Section 504 means Section 504 of the Rehabilitation Act of 1973 (Pub. L. 93–112; 29 U.S.C. 794), as amended.

Section 1557 means Section 1557 of the ACA.

Sex stereotypes refers to stereotypical notions of gender, including expectations of how an individual represents or communicates gender to others, such as behavior, clothing,

hairstyles, activities, voice, mannerisms, or body characteristics. These stereotypes can include expectations that gender can only be constructed within two distinct opposite and disconnected forms (masculinity and femininity), and that gender cannot be constructed outside of this gender construct (individuals who identify as neither, both, or as a combination of male and female genders).

State-based Marketplace means a Health Insurance Marketplace identified in paragraphs (1) and/or (2) of this definition for which a State has received approval from the Department pursuant to the standards in 45 CFR 155.105:

(1) A Health Insurance Marketplace that facilitates the purchase of health insurance coverage through qualified health plans in the individual market and that provides for the establishment of a Small Business Health Options Program; or

(2) A Health Insurance Marketplace that provides only for the establishment of a Small Business Health Options Program.

Taglines means short statements written in non-English languages that indicate the availability of language assistance services free of charge.

Title I entity means any entity established under Title I of the ACA, including State-based Marketplaces and Federally-facilitated Marketplaces.

Title VI means Title VI of the Civil Rights Act of 1964 (Pub. L. 88–352; 42 U.S.C. 2000d *et seq.*), as amended.

Title IX means Title IX of the Education Amendments of 1972 (Pub. L. 92–318; 20 U.S.C. 1681 *et seq.*), as amended.

§ 92.5 Assurances required.

(a) *Assurances.* An entity applying for Federal financial assistance to which this part applies shall, as a condition of any application for Federal financial assistance, submit an assurance, on a form specified by the Director, that the entity's health programs and activities will be operated in compliance with Section 1557 and this part. An issuer seeking certification to participate in a Health Insurance Marketplace or a State seeking approval to operate a State-based Marketplace to which Section 1557 or this part applies shall, as a condition of certification or approval, submit an assurance, on a form specified by the Director, that the health program or activity will be operated in compliance with Section 1557 and this part. An applicant or entity may incorporate this assurance by reference in subsequent applications to the Department for Federal financial assistance or requests for certification to participate in a Health Insurance Marketplace or approval to operate a State-based Marketplace.

(b) *Duration of obligation.* The duration of the assurances required by this subpart is the same as the duration of the assurances required in the Department's regulations implementing Section 504, at 45 CFR 84.5(b).

(c) *Covenants.* When Federal financial assistance is provided in the form of real property or interest, the same conditions apply as those contained in the Department's regulations implementing Section 504, at 45 CFR 84.5(c), except that the nondiscrimination obligation applies to discrimination on all bases covered under Section 1557 and this part.

§ 92.6 Remedial action and voluntary action.

(a) *Remedial action.* (1) If the Director finds that a recipient or State-based Marketplace has discriminated against an individual on the basis of race, color, national origin, sex, age, or disability, in violation of Section 1557 or this part, such recipient or State-based Marketplace shall take such remedial action as the Director may require to overcome the effects of the discrimination.

(2) Where a recipient is found to have discriminated against an individual on the basis of race, color, national origin, sex, age, or disability, in violation of Section 1557 or this part, and where another recipient exercises control over the recipient that has discriminated, the Director, where appropriate, may require either or both entities to take remedial action.

(3) The Director may, where necessary to overcome the effects of discrimination in violation of Section 1557 or this part, require a recipient or State-based Marketplace to take remedial action with respect to:

(i) Individuals who are no longer participants in the recipient's or State-based Marketplace's health program or activity but who were participants in the health program or activity when such discrimination occurred; or

(ii) Individuals who would have been participants in the health program or activity had the discrimination not occurred.

(b) *Voluntary action.* A covered entity may take steps, in addition to any action that is required by Section 1557 or this part, to overcome effects of conditions that result or resulted in limited participation in the covered entity's health programs or activities by individuals on the basis of race, color, national origin, sex, age, or disability.

§ 92.7 Designation of responsible employee and adoption of grievance procedures.

(a) *Designation of responsible employee.* Each covered entity that employs 15 or more persons shall designate at least one employee to coordinate its efforts to comply with and carry out its responsibilities under Section 1557 and this part, including the investigation of any grievance communicated to it alleging noncompliance with Section 1557 or this part or alleging any action that would be prohibited by Section 1557 or this part. For the Department, including the Federally-facilitated Marketplaces, the Office for Civil Rights (OCR) will be deemed the responsible employee under this section.

(b) *Adoption of grievance procedures.* Each covered entity that employs 15 or more persons shall adopt grievance procedures that incorporate appropriate due process standards and that provide for the prompt and equitable resolution of grievances alleging any action that would be prohibited by Section 1557 or this part. For the Department, including the Federally-facilitated Marketplaces, the procedures for addressing complaints of discrimination on the grounds covered under Section 1557 or this part will be deemed grievance procedures under this section.

§ 92.8 Notice requirement.

(a) Each covered entity shall take appropriate initial and continuing steps to notify beneficiaries, enrollees, applicants, or members of the public of the following:

(1) The covered entity does not discriminate on the basis of race, color, national origin, sex, age, or disability;

(2) The covered entity provides appropriate auxiliary aids and services, including qualified interpreters and information in alternate formats, free of charge and in a timely manner, when such aids and services are necessary to ensure an equal opportunity to participate to individuals with disabilities;

(3) The covered entity provides language assistance services, free of charge and in a timely manner, when such services are necessary to provide meaningful access to individuals with limited English proficiency;

(4) How to obtain the aids and services in paragraphs (a)(2) and (3) of this section;

(5) An identification of and contact information for the responsible employee designated pursuant to § 92.7(a), if applicable;

(6) The availability of the grievance procedure and how to file a grievance, pursuant to § 92.7(b), if applicable; and

(7) How to file a discrimination complaint with OCR in the Department.

(b) Within 90 days of the effective date of this part, each covered entity shall post, consistent with paragraph (f) of this section, an English-language notice that conveys the information in paragraphs (a)(1) through (7) of this section.

(c) For use by covered entities, the Director shall make available, electronically and in any other manner that the Director determines appropriate, the content of a sample notice that conveys the information in paragraphs (a)(1) through (7) of this section in English and in the top 15 languages spoken by individuals with limited English proficiency nationally.

(d) Within 90 days of the effective date of this part, each covered entity shall post taglines in the top 15 languages spoken by individuals with limited English proficiency nationally.

(e) For use by covered entities, the Director shall make available, electronically and in any other manner that the Director determines appropriate, taglines in the top 15 languages spoken by individuals with limited English proficiency nationally.

(f)(1) Each covered entity shall post the English-language notice required by paragraphs (a) and (b) of this section and the taglines required by paragraph (d) of this section in a conspicuously-visible font size:

(i) In significant publications and significant communications targeted to beneficiaries, enrollees, applicants, or members of the public;

(ii) In conspicuous physical locations where the entity interacts with the public; and

(iii) In a conspicuous location accessible from the home page of the covered entity's Web site.

(2) A covered entity may also post the notice and taglines in additional publications and communications.

(g) A covered entity that complies with paragraphs (a), (b), (d), and (f) of this section meets the requirements of the regulation implementing Title VI, at § 80.6(d) of this subchapter, the regulation implementing Section 504, at §§ 84.8(a) and 85.12 of this subchapter, the regulation implementing Title IX, at §§ 86.8(b) and 86.9(a)(1) of this subchapter, and the regulation implementing the Age Act, at § 91.32(b) of this subchapter, as applicable.

Subpart B—Nondiscrimination Provisions

§ 92.101 Discrimination prohibited.

(a) *General.* (1) Except as provided in Title I of the ACA, an individual shall not, on the basis of race, color, national origin, sex, age, or disability, be excluded from participation in, be denied the benefits of, or otherwise be subjected to discrimination under any health program or activity to which this part applies.

(2) Except as provided in § 92.208, this part does not apply to discrimination by a covered entity against its own employees.

(b) *Specific discriminatory actions prohibited.* Under any health program or activity to which this part applies:

(1) Each covered entity must comply with the regulation implementing Title VI, at § 80.3(b)(1) through (6) of this subchapter.

(2)(i) Each recipient and State-based Marketplace must comply with the regulation implementing Section 504, at §§ 84.4(b), 84.21 through 84.23(b), 84.31, 84.34, 84.37, 84.38, and 84.41 through 84.55 of this subchapter. Where this paragraph cross-references regulatory provisions that use the term ''recipient,'' the term ''recipient or State-based Marketplace'' shall apply in its place.

(ii) The Department, including the Federally-facilitated Marketplaces, must comply with the regulation implementing Section 504, at §§ 85.21(b), 85.41 through 85.42, and 85.44 through 85.51 of this subchapter.

(3) Each covered entity must comply with the regulation implementing Title IX, at § 86.31(b)(1) through (8) of this subchapter. Where this paragraph cross-references regulatory provisions that use the term ''student,'' ''employee,'' or ''applicant,'' the terms ''individual'' shall apply in its place.

(4) Each covered entity must comply with the regulation implementing the Age Act, at § 91.11(b) of this subchapter.

(5) The enumeration of specific forms of discrimination in this paragraph does not limit the generality of the prohibition in paragraph (a) of this section.

(c) The exceptions applicable to Title VI apply to discrimination on the basis of race, color, or national origin under this part. The exceptions applicable to Section 504 apply to discrimination on the basis of disability under this part. The exceptions applicable to the Age Act apply to discrimination on the basis of age under this part. These provisions are found at §§ 80.3(d), 84.4(c), 85.21(c), 91.12 through 91.15, and 91.17 through 91.18 of this subchapter.

(d) Where the regulatory provisions referenced in paragraphs (b)(1), (b)(3), (b)(4), and (c) of this section use the term ''recipient,'' the term ''covered entity'' shall apply in its place. Where the regulatory provisions referenced in paragraphs (b)(1), (b)(3), (b)(4), and (c) of this section use the terms ''program or activity'' or ''program'' or ''education program,'' the term ''health program or activity'' shall apply in its place.

Subpart C—Specific Applications to Health Programs and Activities

§ 92.201 Meaningful access for individuals with limited English proficiency.

(a) *General requirement.* A covered entity shall take reasonable steps to provide meaningful access to each individual with limited English proficiency that it serves or encounters in its health programs and activities.

(b) *Evaluation of compliance.* In evaluating whether a covered entity has met its obligation under paragraph (a) of this section, the Director shall:

(1) Evaluate, and give substantial weight to, the nature and importance of the health program or activity, including the particular communication at issue, to the individual with limited English proficiency; and

(2) Take other relevant factors into account. Such factors may include:

(i) The length and complexity of the communication involved;

(ii) The context in which the communication is taking place;

(iii) The prevalence of the language in which the individual communicates among those eligible to be served or likely to be encountered by the health program or activity;

(iv) All resources available to the covered entity; and

(v) The cost of language assistance services.

(c) *Language assistance services requirements.* Language assistance services required under paragraph (a) of this section must be provided free of charge, be accurate and timely, and protect the privacy and independence of the individual with limited English proficiency.

(d) *Specific requirements for interpreter services.* Subject to paragraph (a) of this section, a covered entity shall offer a qualified interpreter for an individual with limited English proficiency when oral interpretation is a reasonable step to provide meaningful access for the individual with limited English proficiency.

(e) *Restricted use of certain persons to interpret or facilitate communication.* A covered entity shall not:

(1) Require an individual with limited English proficiency to provide his or her own interpreter;

(2) Rely on an adult accompanying an individual with limited English proficiency to interpret or facilitate communication, except:

(i) In an emergency involving an imminent threat to the safety or welfare of an individual or the public where there is no qualified interpreter immediately available; or

(ii) Where the individual with limited English proficiency specifically requests that the accompanying adult interpret or facilitate communication, the accompanying adult agrees to provide such assistance, and reliance on that adult for such assistance is appropriate under the circumstances; or

(3) Rely on a minor child to interpret or facilitate communication, except in an emergency involving an imminent threat to the safety or welfare of an individual or the public where there is no qualified interpreter immediately available.

(f) *Acceptance of language assistance services is not required.* Nothing in this section shall be construed to require an individual with limited English proficiency to accept language assistance services.

§ 92.202 Effective communication for individuals with disabilities.

A covered entity shall take appropriate steps to ensure that communications with individuals with disabilities are as effective as communications with others in health programs and activities, in accordance with the standards found at 28 CFR 35.160 through 35.164. Where the regulatory provisions referenced in this section use the term ''public entity,'' the term ''covered entity'' shall apply in its place.

§ 92.203 Accessibility standards for buildings and facilities.

(a) Each facility or part of a facility in which health programs or activities are conducted that is constructed or altered by or on behalf of, or for the use of, a recipient or State-based Marketplace shall comply with the 2010 Standards as defined in § 92.4, if the construction or alteration was commenced on or after [18 MONTHS FROM DATE OF PUBLICATION OF FINAL RULE]. Departures from particular technical and scoping requirements by the use of other methods are permitted where substantially equivalent or greater access to and usability of the facility is provided. All newly constructed or altered buildings or facilities subject to this section shall comply with the requirements for a ''public building or facility'' as defined in Section 106.5 of the 2010 Standards.

(b) Each facility or part of a facility in which health programs or activities are conducted that is constructed or altered by or on behalf of, or for the use of, a recipient or State-based Marketplace in conformance with the Uniform Federal Accessibility Standards, the 1991 Standards, or the 2010 Standards as defined in § 92.4 shall be deemed to comply with the requirements of this section and with 45 CFR 84.23(a) and (b), cross-referenced in § 92.101(b)(2)(i) with respect to those facilities, if the construction or alteration was commenced before [18 MONTHS FROM DATE OF PUBLICATION OF FINAL RULE] .

(c) Each building or part of a building that is constructed or altered by or on behalf of, or for the use of, the Department must be designed, constructed, or altered so as to be readily accessible to and usable by individuals with disabilities. The definitions, requirements, and standards of the Architectural Barriers Act, as established in Appendices C and D to 36 CFR part 1191, apply to buildings and facilities covered by this section.

§ 92.204 Accessibility of electronic and information technology.

(a) Covered entities shall ensure that their health programs or activities provided through electronic and information technology are accessible to individuals with disabilities, unless doing so would result in undue financial and administrative burdens or a fundamental alteration in the nature of the health programs or activities. When undue financial and administrative burdens or a fundamental alteration exist, the covered entity shall provide information in a format other than an electronic format that would not result in such undue financial and administrative burdens or a fundamental alteration but would ensure, to the maximum extent possible, that individuals with disabilities receive the benefits or services of the health program or activity that are provided through electronic and information technology.

(b) State-based Marketplaces and recipients shall ensure that their health programs and activities provided through Web sites comply with the requirements of Title II of the ADA.

§ 92.205 Requirement to make reasonable modifications.

A covered entity shall make reasonable modifications to policies, practices, or procedures when such modifications are necessary to avoid discrimination on the basis of disability, unless the covered entity can demonstrate that making the modifications would fundamentally alter the nature of the health program or activity. For the purposes of this section, the term ''reasonable modifications'' shall be interpreted in a manner consistent with the term as set forth in the ADA Title II regulation at 28 CFR 35.130(b)(7).

§ 92.206 Equal program access on the basis of sex.

A covered entity shall provide individuals equal access to its health programs or activities without discrimination on the basis of sex, and shall treat individuals consistent with their gender identity, except that any health services that are ordinarily or exclusively available to individuals of one gender may not be denied or limited based on the fact that an individual's sex assigned at birth, gender identity, or gender otherwise recorded in a medical record is different from the one to which such health services are ordinarily or exclusively available.

§ 92.207 Nondiscrimination in health-related insurance and other health-related coverage.

(a) *General.* A covered entity shall not, in providing or administering health-related insurance or other health-related coverage, discriminate on the basis of race, color, national origin, sex, age, or disability.

(b) *Discriminatory actions prohibited.* A covered entity shall not, in providing or administering health-related insurance or other health-related coverage:

(1) Deny, cancel, limit, or refuse to issue or renew a health insurance plan or policy, or other health coverage, or deny or limit coverage of a claim, or impose additional cost sharing or other limitations or restrictions, on the basis of an enrollee's or prospective enrollee's race, color, national origin, sex, age, or disability;

(2) Employ marketing practices or benefit designs that discriminate on the basis of race, color, national origin, sex, age, or disability in a health-related insurance plan or policy, or other health-related coverage;

(3) Deny or limit coverage, deny a claim, or impose additional cost sharing or other limitations or restrictions, on any health services that are ordinarily or exclusively available to individuals of one sex, based on the fact that an individual's sex assigned at birth, gender identity, or gender otherwise recorded by the plan or issuer is

different from the one to which such health services are ordinarily or exclusively available;

(4) Categorically or automatically exclude from coverage, or limit coverage for, all health services related to gender transition; or

(5) Otherwise deny or limit coverage, or deny a claim, for specific health services related to gender transition if such denial or limitation results in discrimination against a transgender individual.

(c) The enumeration of specific forms of discrimination in paragraph (b) does not limit the general applicability of the prohibition in paragraph (a) of this section.

(d) Nothing in this section is intended to determine, or restrict a covered entity from determining, whether a particular health service is medically necessary or otherwise meets applicable coverage requirements in any individual case.

§ 92.208 Employer liability for discrimination in employee health benefit programs.

A covered entity that provides an employee health benefit program to its employees and/or their dependents shall be liable for violations of this part in that employee health benefit program only when:

(a) The entity is principally engaged in providing or administering health services or health insurance coverage;

(b) The entity receives Federal financial assistance a primary objective of which is to fund the entity's employee health benefit program; or

(c) The entity is not principally engaged in providing or administering health services or health insurance coverage but operates a health program or activity, which is not an employee health benefit program, that receives Federal financial assistance; except that the entity is liable under this part with regard to the provision or administration of employee health benefits only to the employees in that health program or activity.

§ 92.209 Nondiscrimination on the basis of association.

A covered entity shall not exclude from participation in, deny the benefits of, or otherwise discriminate against an individual or entity in its health programs or activities on the basis of the race, color, national origin, age, disability, or sex of an individual with whom the individual or entity is known or believed to have a relationship or association.

Subpart D—Enforcement

§ 92.301 Enforcement mechanisms.

The enforcement mechanisms available for and provided under Title VI, Title IX, Section 504, or the Age Act shall apply for purposes of Section 1557 and this part with respect to covered entities.

§ 92.302 Procedures for health programs and activities conducted by recipients and State-based Marketplaces.

(a) The procedural provisions applicable to Title VI apply with respect to enforcement actions concerning discrimination on the basis of race, color, national, origin, sex, and disability discrimination under Section 1557 or this part. These procedures are found at §§ 80.6 through 80.11 of this subchapter and part 81 of this subchapter.

(b) The procedural provisions applicable to the Age Act apply with respect to enforcement actions concerning age discrimination under Section 1557 or this part. These procedures are found at §§ 91.41 through 91.50 of this subchapter.

(c) An individual or entity may bring a civil action to challenge a violation of Section 1557 or this part in a United States District Court in which the recipient or State-based Marketplace is found or transacts business.

§ 92.303 Procedures for health programs and activities administered by the Department.

(a) This section applies to discrimination on the basis of race, color, national origin, sex, age, or disability in health programs or activities administered by the Department, including the Federally-facilitated Marketplaces.

(b) The procedural provisions applicable to Section 504 at §§ 85.61 through 85.62 of this subchapter shall apply with respect to enforcement actions against the Department concerning discrimination on the basis of race, color, national origin, sex, age, or disability under Section 1557 or this part. Where this section cross-references regulatory provisions that use the term ''handicap,'' this term shall be replaced with ''race, color, national origin, sex, age, or disability.''

(c) *Access to sources of information.* The Department shall permit access by OCR to its books, records, accounts and other sources of information, and facilities as may be pertinent to ascertain compliance with Section 1557 or this part. Where any information required of the Department is in the exclusive possession of any other agency, institution or individual, and the other agency, institution or individual shall fail or refuse to furnish this information, the Department shall so certify and shall set forth what efforts it has made to obtain the information. Asserted considerations of privacy or confidentiality may not operate to bar OCR from evaluating or seeking to enforce compliance with Section 1557 or this part. Information of a confidential nature obtained in connection with compliance evaluation or enforcement shall not be disclosed except where necessary under the law.

(d) *Intimidatory or retaliatory acts prohibited.* The Department shall not intimidate, threaten, coerce, or discriminate against any individual for the purpose of interfering with any right or privilege secured by Section 1557 or this part, or because such individual has made a complaint, testified, assisted, or participated in any manner in an investigation, proceeding or hearing under Section 1557 or this part. The identity of complainants shall be kept confidential by OCR, except to the extent necessary to carry out the purposes of Section 1557 or this part.

Appendix A to Part 92 — Sample Notice Informing Individuals About Nondiscrimination and Accessibility Requirements

Discrimination is Against the Law

[Name of covered entity] complies with applicable federal civil rights laws and does not discriminate on the basis of race, color, national origin, age, disability, or sex, including sex stereotypes and gender identity[. [Name of covered entity] does not exclude people or treat them worse because of their race, color, national origin, age, disability, or sex.

[Name of covered entity]:

- Provides free aids and services to people with disabilities to communicate effectively with us, such as:
  - Qualified sign language interpreters
  - written information in other formats (large print, audio, accessible electronic formats, other formats)
- Provides free language services to people whose first language is not English when needed to communicate effectively with us, such as:
  - Interpreters
  - information translated into other languages

If you need these services, contact _____

If you believe that [Name of covered entity] has failed to provide these services or discriminated in another way on the basis of race, color, national origin, age, disability, or sex, you can file a grievance with: [*Name of Civil Rights Coordinator*], [*Mailing Address*], [*Telephone number*], [*TTY number—if covered entity has one*], [*Fax*], [*Email*]. You can file a grievance in person, by mail, fax, or email. If you need help filing a grievance, [*Name of Civil Rights Coordinator*] is available to help you. You can also file a civil

rights complaint with the U.S. Department of Health and Human Services Office for Civil Rights electronically through the Office for Civil Rights Complaint Portal available at *https://ocrportal.hhs.gov/ocr/portal/lobby.jsf*, or by mail, phone, or fax at: [*Add address, phone and fax of OCR Headquarters Office*]. Complaint forms are available at *http://www.hhs.gov/ocr/office/file/index.html.*

Appendix B to Part 92—Sample Tagline Informing Individuals With Limited English Proficiency of Language Assistance Services

ATTENTION: If you speak [insert language], language assistance services, free of charge, may be available to you. Contact 1–xxx–xxx–xxxx (TTY: 1–xxx–xxx–xxxx).

Dated: September 1, 2015.

Sylvia M. Burwell,

Secretary.

[FR Doc. 2015–22043 Filed 9–3–15; 11:15 am]

BILLING CODE 4150–01–P

Reader Aids

Federal Register

Vol. 80, No. 173

Tuesday, September 8, 2015

CUSTOMER SERVICE AND INFORMATION

Federal Register/Code of Federal Regulations	
General Information, indexes and other finding aids	**202–741–6000**
Laws	**741–6000**
Presidential Documents	
Executive orders and proclamations	**741–6000**
The United States Government Manual	**741–6000**
Other Services	
Electronic and on-line services (voice)	**741–6020**
Privacy Act Compilation	**741–6064**
Public Laws Update Service (numbers, dates, etc.)	**741–6043**

ELECTRONIC RESEARCH

World Wide Web

Full text of the daily Federal Register, CFR and other publications is located at: **www.fdsys.gov.**

Federal Register information and research tools, including Public Inspection List, indexes, and Code of Federal Regulations are located at: **www.ofr.gov.**

E-mail

FEDREGTOC-L (Federal Register Table of Contents LISTSERV) is an open e-mail service that provides subscribers with a digital form of the Federal Register Table of Contents. The digital form of the Federal Register Table of Contents includes HTML and PDF links to the full text of each document.

To join or leave, go to **http://listserv.access.gpo.gov** and select *Online mailing list archives, FEDREGTOC-L, Join or leave the list (or change settings);* then follow the instructions.

PENS (Public Law Electronic Notification Service) is an e-mail service that notifies subscribers of recently enacted laws.

To subscribe, go to **http://listserv.gsa.gov/archives/publaws-l.html** and select *Join or leave the list (or change settings);* then follow the instructions.

FEDREGTOC-L and **PENS** are mailing lists only. We cannot respond to specific inquiries.

Reference questions. Send questions and comments about the Federal Register system to: **fedreg.info@nara.gov**

The Federal Register staff cannot interpret specific documents or regulations.

CFR Checklist. Effective January 1, 2009, the CFR Checklist no longer appears in the Federal Register. This information can be found online at **http://bookstore.gpo.gov/.**

FEDERAL REGISTER PAGES AND DATE, SEPTEMBER

52605–52934 1
52935–53234 2
53235–53456 3
53457–53690 4
53691–54222 8

CFR PARTS AFFECTED DURING SEPTEMBER

At the end of each month the Office of the Federal Register publishes separately a List of CFR Sections Affected (LSA), which lists parts and sections affected by documents published since the revision date of each title.

2 CFR

910 53235

3 CFR

Proclamations:
9309 53443
9310 53445
9311 53447
9312 53449
9313 53451
9314 53453
9315 53455

5 CFR

1653 52605

6 CFR

Proposed Rules:
5 53019
46 53933

7 CFR

271 53240
273 53240
274 53240
275 53240
301 53457
1205 53243
1218 53257
1784 52606
1980 53457
Proposed Rules:
1c 53933
51 53021
504 53021
989 53022
1205 53265

9 CFR

Proposed Rules:
101 53475
116 53475

10 CFR

72 53961
Proposed Rules:
51 53266
73 53478
429 52676
430 52850
431 52676
745 53933

12 CFR

1282 53392

14 CFR

25 52615
39 ..... 52935, 52937, 52939, 52941, 52946, 52948, 52953, 52955
97 ..... 53694, 53696, 53700, 53702
Proposed Rules:
39 ..... 53024, 53028, 53030, 53480
91 53033
1230 53933

15 CFR

730 52959
732 52959
734 52959
736 52959
738 52959
740 ..... 52959, 52962
742 52959
743 52959
744 ..... 52959, 52963
746 52959
747 52959
748 52959
750 52959
752 52959
754 52959
756 52959
758 52959
760 52959
762 52959
764 52959
766 52959
768 52959
770 52959
772 52959
774 52959
Proposed Rules:
27 53933

16 CFR

Proposed Rules:
312 53482
315 53272
456 53274
1211 53036

19 CFR

207 52617

20 CFR

Proposed Rules:
431 53933

21 CFR

520 53458
524 53458
558 53458

22 CFR

22 53704
Proposed Rules:
205 53483
225 53933

24 CFR

960 53709

982 52619
3280 53712
3282 53712
3285 53712

26 CFR

1 ....52972, 52976, 53732
Proposed Rules:
1 ....52678, 53058, 53068

28 CFR

2 52982
Proposed Rules:
46 53933

29 CFR

Proposed Rules:
21 53933

30 CFR

7 52984
18 52984
44 52984
46 52984
48 52984
49 52984
56 52984
57 52984
70 52984
71 52984
72 52984
74 52984
75 52984
90 52984
Proposed Rules:
75 53070

31 CFR

Proposed Rules:
Ch. X 52680

32 CFR

Proposed Rules:
219 53933

33 CFR

100 ....52620, 52993, 52996, 52999, 53463
117 ....52622, 52999, 53000, 53463, 53464
165 ....52622, 52625, 53263, 53465
Proposed Rules:
165 53754

34 CFR

Proposed Rules:
97 53933

38 CFR

Proposed Rules:
16 53933

40 CFR

9 53000
52 ....52627, 52630, 53001, 53467, 53735, 53739
180 53469
721 53000
Proposed Rules:
9 53756
22 53756
26 53933
51 54146
52 ....52701, 52710, 53086, 53484, 53757
60 54146
61 54146
63 54146
85 53756
86 53756
600 53756
1033 53756
1036 53756
1037 53756
1039 53756
1042 53756
1065 53756
1066 53756
1068 53756

42 CFR

52i 53739
Proposed Rules:
413 53087

44 CFR

64 52633
67 53007

45 CFR

Proposed Rules:
46 53933
92 54172
690 53933

46 CFR

503 ....52637, 52638

47 CFR

0 53747
2 53747
11 53747
15 53747
18 53747
43 52641
73 53747
74 53747
76 53747
78 53747
80 53747
90 53747
95 53747
97 53747
Proposed Rules:
0 52714
1 52714
2 52714
15 ....52714, 52715
18 52714
54 ....53088, 53757
73 52715
74 52715

48 CFR

Ch. I 53436, 53440
1 53753
2 53753
3 53753
4 ....53439, 53753
6 53753
7 ....53436, 53753
8 53753
9 53753
10 53753
12 53753
13 53753
15 53753
16 53753
17 53753
19 53753
22 53753
23 53436
25 53753
28 53753
30 53753
31 53439
35 53439
42 53753
50 53753
52 ....53436, 53439, 53753
53 53753
1842 52642
1852 52642

49 CFR

591 53011
592 53011
Proposed Rules:
11 53933
512 53756
523 53756
534 53756
535 53756
537 53756
583 53756
1011 53758
1034 53758
1102 53758
1104 53758
1115 53758

50 CFR

20 ....52645, 52663
622 ....53263, 53473
648 53015
660 53015
679 52673
Proposed Rules:
17 52717
660 53088

LIST OF PUBLIC LAWS

Note: No public bills which have become law were received by the Office of the Federal Register for inclusion in today's **List of Public Laws**.

Last List August 11, 2015

Public Laws Electronic Notification Service (PENS)

PENS is a free electronic mail notification service of newly enacted public laws. To subscribe, go to *http://listserv.gsa.gov/archives/publaws-l.html*

Note: This service is strictly for E-mail notification of new laws. The text of laws is not available through this service. **PENS** cannot respond to specific inquiries sent to this address.