AUTHENTICATED
U.S. GOVERNMENT
INFORMATION
GPO

Title 33—Navigation and Navigable Waters

(This book contains parts 125 to 199)

Part

CHAPTER I—Coast Guard, Department of Transportation (Continued) 125

CHAPTER I—COAST GUARD, DEPARTMENT OF TRANSPORTATION (CONTINUED)

SUBCHAPTER L—WATERFRONT FACILITIES

Part		*Page*
125	Identification credentials for persons requiring access to waterfront facilities or vessels	7
126	Handling of Class 1 (explosive) materials or other dangerous cargoes within or contiguous to waterfront facilities	16
127	Waterfront facilities handling liquefied natural gas and liquefied hazardous gas	24
128	Security of passenger terminals	47
	Index	53

SUBCHAPTER M—MARINE POLLUTION FINANCIAL RESPONSIBILITY AND COMPENSATION

133	Oil spill liability trust fund; state access	57
135	Offshore oil pollution compensation fund	59
136	Oil spill liability trust fund; claims procedures; designation of source; and advertisement	67
138	Financial Responsibility for water pollution (vessels)	77
	Index	129

SUBCHAPTER N—OUTER CONTINENTAL SHELF ACTIVITIES

140	General	133
141	Personnel	139
142	Workplace safety and health	143
143	Design and equipment	146
144	Lifesaving appliances	150
145	Fire-fighting equipment	153
146	Operations	155
147	Safety zones	161
	Index	167

SUBCHAPTER NN—DEEPWATER PORTS

148	General	174

Part		Page
149	Design, construction, and equipment	200
150	Operations	215
	Index	235

SUBCHAPTER O—POLLUTION

151	Vessels carrying oil, noxious liquid substances, garbage, municipal or commercial waste, and ballast water	241
153	Control of pollution by oil and hazardous substances, discharge removal	286
154	Facilities transferring oil or hazardous material in bulk	292
155	Oil or hazardous material pollution prevention regulations for vessels	365
156	Oil and hazardous material transfer operations	430
157	Rules for the protection of the marine environment relating to tank vessels carrying oil in bulk	442
158	Reception facilities for oil, noxious liquid substances, and garbage	502
159	Marine sanitation devices	512
	Index	525

SUBCHAPTER P—PORTS AND WATERWAYS SAFETY

160	Ports and waterways safety—general	537
161	Vessel traffic management	557
162	Inland waterways navigation regulations	573
163	Towing of barges	596
164	Navigation safety regulations	597
165	Regulated navigation areas and limited access areas	619
166	Shipping safety fairways	689
167	Offshore traffic separation schemes	700
168	Escort requirements for certain tankers	705
169	Ship reporting systems	707
	Index	711

SUBCHAPTERS Q—R [RESERVED]

SUBCHAPTER S—BOATING SAFETY

173	Vessel numbering and casualty and accident reporting	720
174	State numbering and casualty reporting systems	726
175	Equipment requirements	730
177	Correction of especially hazardous conditions	735
179	Defect notification	739
181	Manufacturer requirements	741

Part		*Page*
183	Boats and associated equipment	746
184—186	[Reserved]	
187	Vessel identification system	779
188—199	[Reserved]	
	Index	787

CROSS REFERENCES: United States Customs Service, Department of the Treasury: 19 CFR Chapter I.

Coast Guard regulations relating to shipping: 46 CFR Chapter I.

Federal Communications Commission: Stations on shipboard in the maritime services: 47 CFR, Part 80.

Maritime Administration, Department of Transportation: 46 CFR Chapter II.

Federal Maritime Commission: 46 CFR Chapter IV.

NOTE: Other regulations issued by the Department of Transportation appear in Titles 14, I; 23, I, II; 33, I, IV; 44, IV; 46, I, II, III; 48, Chapter 12, and 49 Subtitle A, I, II, III, IV, V, and VI.

ABBREVIATIONS: The following abbreviations are used in this chapter:

BMC=*Chief Boatswains Mate.* CGFR=*Coast Guard Federal Register document number.* CG=*Coast Guard.* EM=*Electrician's Mate.* LS=*Lightship.* NC=*Flag hoist meaning, ''I am in distress and require immediate assistance.''* NCG=*Call letters for any Coast Guard Shore Radio Station.* OAN=*Aids to Navigation Division.* PTP=*Training and Procurement.* U.S.C.G.=*United States Coast Guard.*

SUBCHAPTER L—WATERFRONT FACILITIES

PART 125—IDENTIFICATION CREDENTIALS FOR PERSONS REQUIRING ACCESS TO WATERFRONT FACILITIES OR VESSELS

Sec.
125.01 Commandant.
125.03 District Commander.
125.05 Captain of the Port.
125.06 Western rivers.
125.07 Waterfront facility.
125.08 Great Lakes.
125.09 Identification credentials.
125.11 Form of Coast Guard Port Security Card.
125.12 Period of validity of Coast Guard Port Security Cards.
125.13 Captain of the Port Identification Cards.
125.15 Access to waterfront facilities, and port and harbor areas, including vessels and harbor craft therein.
125.17 Persons eligible for Coast Guard Port Security Cards.
125.19 Standards.
125.21 Applications.
125.23 United States citizens.
125.25 Aliens.
125.27 Sponsorship of applicant.
125.29 Insufficient information.
125.31 Approval of applicant by Commandant.
125.33 Holders of Coast Guard Port Security Cards.
125.35 Notice by Commandant.
125.37 Hearing Boards.
125.39 Notice by Hearing Board.
125.41 Challenges.
125.43 Hearing procedure.
125.45 Action by Commandant.
125.47 Appeals.
125.49 Action by Commandant after appeal.
125.51 Replacement of lost Coast Guard Port Security Card.
125.53 Requirements for credentials; certain vessels operating on navigable waters of the United States (including the Great Lakes and Western Rivers).
125.55 Outstanding Port Security Card Applications.
125.57 Applications previously denied.

AUTHORITY: R.S. 4517, 4518, secs. 19, 2, 23 Stat. 58, 118, sec. 7, 49 Stat. 1936, sec. 1, 40 Stat. 220; 46 U.S.C. 570–572, 2, 689, 50 U.S.C. 191, EO 10173, EO 10277, EO 10352, 3 CFR, 1949–1953 Comp. pp. 356, 778, 873.

SOURCE: CGFR 56–15, 21 FR 2940, May 3, 1956, unless otherwise noted.

§ 125.01 Commandant.

The term *Commandant* means Commandant of the Coast Guard.

§ 125.03 District Commander.

The term *District Commander* means the officer of the Coast Guard designated by the Commandant to command a Coast Guard District.

§ 125.05 Captain of the Port.

The term *Captain of the Port* means the officer of the Coast Guard, under the command of a District Commander, so designated by the Commandant for the purpose of giving immediate direction to Coast Guard law enforcement activities within the general proximity of the port in which he is situated.

§ 125.06 Western rivers.

The term *western rivers* as used in the regulations in this subchapter shall include only the Red River of the North, the Mississippi River and its tributaries above the Huey P. Long Bridge, and that part of the Atchafalaya River above its junction with the Plaquemine-Morgan City alternate waterway.

[CGFR 57–52, 22 FR 10301, Dec. 20, 1957]

§ 125.07 Waterfront facility.

The term *waterfront facility* as used in this subchapter, means all piers, wharves, docks, and similar structures to which vessels may be secured, buildings on such structures or contiguous to them, and equipment and materials on such structures or in such buildings.

§ 125.08 Great Lakes.

The term *Great Lakes* as used in the regulations in this subchapter shall include the Great Lakes and their connecting and tributary waters.

[CGFR 57–52, 22 FR 10301, Dec. 20, 1957]

§ 125.09 Identification credentials.

The term *Identification credentials* as used in this subchapter, means any of the following:

(a) Coast Guard Port Security Card (Form CG 2514).

(b) Merchant Mariner's Document.

(c) Armed Forces Identification Card.

(d) Identification credentials issued by Federal Law enforcement and intelligence agencies to their officers and employees (e. g., Department of the Treasury, Department of Justice, Federal Communications Commission).

(e) Identification credentials issued to public safety officials (e. g., police, firemen) when acting within the scope of their employment.

(f) Such other identification as may be approved by the Commandant from time to time.

[CGD 56–15, 21 FR 2940, May 3, 1956, as amended by CGD 77–228, 43 FR 53427, Nov. 16, 1978]

§ 125.11 Form of Coast Guard Port Security Card.

The Coast Guard Port Security Card issued by the Coast Guard under the provisions of this subchapter shall be a laminated card bearing photograph, signature, fingerprint, and personal description of the holder, and other pertinent data.

§ 125.12 Period of validity of Coast Guard Port Security Cards.

(a) The Coast Guard Port Security Card (Form CG–2514) shall be valid for a period of eight years from the date of issuance thereof unless sooner suspended or revoked by proper authority. On the first day after eight years from the date of issuance, the Coast Guard Port Security Card (Form CG–2514) is hereby declared invalid and shall be considered null and void for all purposes.

(b) The holder of a Coast Guard Port Security Card, which is about to expire or has expired, may apply for a new Coast Guard Port Security Card in accordance with the procedures set forth in § 125.21. In the event the applicant's Coast Guard Port Security Card has expired, such card shall accompany the application for a new Coast Guard Port Security Card. In the event the applicant is holding a valid Coast Guard Port Security Card at the time he submits his application for a new card, such person shall surrender the old or expired Coast Guard Port Security Card at the time he is issued a new Coast Guard Port Security Card. In the event the old Coast Guard Port Security Card was lost, stolen, or destroyed, then the applicant shall comply with the provisions in § 125.51, regarding the replacement of a lost Coast Guard Port Security Card and the new card issued as a replacement for a lost card which has expired or is about to expire shall bear a current issuance date.

[CGFR 58–52, 23 FR 9751, Dec. 18, 1958]

§ 125.13 Captain of the Port Identification Cards.

Captain of the Port Identification Cards issued under the form designation ''Form CG 2514'' prior to the revision of August 1950 were declared invalid by a notice published in the FEDERAL REGISTER on September 11, 1946 (11 FR 10103), which declaration is hereby reaffirmed.

§ 125.15 Access to waterfront facilities, and port and harbor areas, including vessels and harbor craft therein.

(a) The Commandant will, from time to time, direct Captains of the Port of certain ports to prevent access of persons who do not possess one or more of the identification credentials listed in § 125.09 to those waterfront facilities, and port and harbor areas, including vessels and harbor craft therein, where the following shipping activities are conducted:

(1) Those vital to the Military Defense Assistance Program.

(2) Those pertaining to the support of U.S. military operations.

(3) Those pertaining to loading and unloading explosives and other dangerous cargo.

(4) Those essential to the interests of national security and defense, to prevent loss, damage or injury, or to insure the observance of rights and obligations of the United States.

(b) No person who does not possess one of the identification credentials aforesaid shall enter or remain in such facilities, or port or harbor areas, including vessels and harbor craft therein.

(c) The Captain of the Port shall give local public notice of the restriction of access to waterfront facilities, and port and harbor areas, including vessels and harbor craft therein, as far in advance

as practicable, and shall cause such facilities and areas to be suitably marked as to such restriction.

[CGFR 56–15, 21 FR 2940, May 3, 1956, as amended by CGFR 58–43, 23 FR 8542, Nov. 1, 1958]

§125.17 Persons eligible for Coast Guard Port Security Cards.

(a) Only the following persons may be issued Coast Guard Port Security Cards:

(1) Persons regularly employed on vessels or on waterfront facilities.

(2) Persons having regular public or private business connected with the operation, maintenance, or administration of vessels, their cargoes, or waterfront facilities.

(b) A holder of a Merchant Mariner's Document shall not be issued a Port Security Card, unless his Merchant Mariner's Document is surrendered to the Coast Guard. In this connection, see §125.09.

[CGFR 62–39, 27 FR 11259, Nov. 15, 1962, as amended by CGD 77–228, 43 FR 53427, Nov. 16, 1978]

§125.19 Standards.

Information concerning an applicant for a Coast Guard Port Security Card, or a holder of such card, which may preclude a determination that his character and habits of life are such as to warrant the belief that his presence on waterfront facilities, and port and harbor areas, including vessels and harbor craft therein, would not be inimical to the security of the United States, shall relate to the following:

(a) Advocacy of the overthrow or alteration of the Government of the United States by unconstitutional means.

(b) Commission of, or attempts or preparations to commit, an act of espionage, sabotage, sedition or treason, or conspiring with, or aiding or abetting another to commit such an act.

(c) Performing, or attempting to perform, duties or otherwise acting so as to serve the interests of another government to the detriment of the United States.

(d) Deliberate unauthorized disclosure of classified defense information.

(e) [Reserved]

(f) Having been adjudged insane, having been legally committed to an insane asylum, or treated for serious mental or neurological disorder, without evidence of cure.

(g) Having been convicted of any of the following offenses, indicative of a criminal tendency potentially dangerous to the security of such waterfront facilities and port and harbor areas, including vessels and harbor craft therein; arson, unlawful trafficking in drugs, espionage, sabotage, or treason.

(h) Drunkenness on the job or addiction to the use of narcotic drugs, without adequate evidence of rehabilitation.

(i) Illegal presence in the United States, its territories or possessions; having been found finally subject to deportation order by the United States Immigration and Naturalization Service.

[CGFR 56–15, 21 FR 2940, May 3, 1956, as amended by 37 FR 23422, Nov. 3, 1972]

§125.21 Applications.

(a)(1) Application for a Coast Guard Port Security Card shall be made under oath in writing and shall include applicant's answers in full to inquiries with respect to such matters as are deemed by the Commandant to be pertinent to the standards set forth in §125.19, and to be necessary for a determination whether the character and habits of life of the applicant are such as to warrant the belief that his presence on waterfront facilities, and port and harbor areas, including vessels and harbor craft therein, would not be inimical to the security of the United States.

(2) The application also shall include applicant's complete identification, citizenship record, personal description, military record, if any, and a statement of the applicant's sponsor certifying the applicant's employment or union membership and that applicant's statements are true and correct to the best of sponsor's knowledge.

(3) The application shall be accompanied by two unmounted, dull finish photographs, 1 inch x 1 15/16 inches, of passport type, taken within one year of the date of application. The photograph shall show the full face with the head uncovered and shall be a clear and

satisfactory likeness of the applicant. It shall portray the largest image of the head and upper shoulders possible within the dimensions specified.

(4) Fingerprint records on each applicant shall be taken by the Coast Guard at the time application is submitted.

(5) The applicant shall present satisfactory proof of his citizenship.

(6) The applicant shall indicate the address to which his Coast Guard Port Security Card can be delivered to him by mail. Under special circumstances the applicant may arrange to call in person for the Coast Guard Port Security Card.

(7) The applicant shall present his application, in person, to a Coast Guard Port Security Unit designated to receive such applications. Such units will be located in or near each port where Coast Guard Port Security Cards are required. Each Captain of the Port shall forward promptly to the Commandant each application for a Coast Guard Port Security Card received by him.

(b) If an applicant fails or refuses to furnish the required information or to make full and complete answer with respect to all matters of inquiry, the Commandant shall hold in abeyance further consideration of the application, and shall notify the applicant that further action will not be taken unless and until the applicant furnishes the required information and fully and completely answers all inquiries directed to him.

[CGFR 59–63, 25 FR 1589, Feb. 24, 1960]

§ 125.23 United States citizens.

Acceptable evidence of United States citizenship is described in this section in the order of its desirability; however, the Coast Guard will reject any evidence not believed to be authentic;

(a) Birth certificate or certified copy thereof.

(b) Certificate of naturalization. This shall be presented by all persons claiming citizenship through naturalization.

(c) Baptismal certificate or parish record recorded within one year after birth.

(d) Statement of a practicing physician certifying that he attended the birth and that he has a record in his possession showing the date and place of birth.

(e) United States passport.

(f) A commission in one of the armed forces of the United States, either regular or reserve; or satisfactory documentary evidence of having been commissioned in one of the armed forces subsequent to January 1, 1936, provided such commission or evidence shows the holder to be a citizen.

(g) A continuous discharge book, or Merchant Mariner's Document issued by the Coast Guard which shows the holder to be a citizen of the United States.

(h) If an applicant claiming to be a citizen of the United States submits a delayed certificate of birth issued under a State's seal, it may be accepted as prima facie evidence of citizenship if no one of the requirements in paragraphs (a) through (g) of this section can be met by the applicant and in the absence of any collateral facts indicating fraud in its procurement.

(i) If no one of the requirements in paragraphs (a) through (h) of this section can be met by the applicant, he should make a statement to that effect, and in an attempt to establish citizenship, he may submit for consideration data of the following character:

(1) Report of the Census Bureau showing the earliest record of age or birth available. Request for such information should be addressed to the Director of the Census, Suitland, Md. 20233. In making such request, definite information must be furnished the Census Bureau as to the place of residence when the first census was taken after the birth of the applicant, giving the name of the street and the number of the house, or other identification of place where living, etc.; also names of parents or the names of other persons with whom residing on the date specified.

(2) School records, immigration records, or insurance policies (the latter must be at least 10 years old).

§ 125.25 Aliens.

Alien registration records together with other papers and documents which indicated the country of which

the applicant is a citizen shall be accepted as evidence of citizenship in a foreign nation.

§125.27 Sponsorship of applicant.

Applications for a Coast Guard Port Security Card shall not be accepted unless sponsored. The applicant shall be sponsored by an authorized official of applicant's employer or by an authorized official of applicant's labor union. Each company and each labor union concerned shall file with the appropriate Captain of the Port a list of officials of the company or union who are authorized to sponsor applicants. Other sponsorship may be accepted where the circumstances warrant.

§125.29 Insufficient information.

(a)(1) If, in the judgment of the Commandant, an application does not contain sufficient information to enable him to satisfy himself that the character and habits of life of the applicant are such to warrant the belief that his presence on waterfront facilities, and port and harbor areas, including vessels and harbor craft herein, would not be inimical to the security of the United States, the Commandant may require the applicant to furnish, under oath in writing or orally, such further information as he deems pertinent to the standards set forth in §125.19 and necessary to enable him to make such a determination.

(2) If an applicant fails or refuses to furnish such additional information, the Commandant shall hold in abeyance further consideration of the application, and shall notify the applicant that further action will not be taken unless and until the applicant furnishes such information.

(b) Upon receipt, the application and such further information as the Commandant may have required shall be referred, except in those instances where action on an application is held in abeyance pursuant to §125.21(b) or to paragraph (a)(2) of this section, to a committee composed of a representative of the Legal Division, of the Merchant Vessel Personnel Division and of the Intelligence Division, Coast Guard Headquarters. The committee shall prepare an analysis of the available information and shall make recommendations for action by the Commandant.

[CGFR 59–63, 25 FR 1589, Feb. 24, 1960]

§125.31 Approval of applicant by Commandant.

(a) If the Commandant is satisfied that the character and habits of life of the applicant are not such as to warrant the belief that his presence on waterfront facilities, and port and harbor areas, including vessels and harbor craft therein, would be inimical to the security of the United States, he will direct that a Coast Guard Port Security Card be issued to the applicant.

(b) If the Commandant is not satisfied that the character and habits of life of the applicant are such as to warrant the belief that his presence on waterfront facilities, and port and harbor areas, including vessels and harbor craft therein, would not be inimical to the security of the United States, he will notify the applicant in writing as provided for in §125.35.

§125.33 Holders of Coast Guard Port Security Cards.

(a) Whenever the Commandant is not satisfied that the character and habits of life of a holder of a Coast Guard Port Security Card are such as to warrant the belief that his presence on waterfront facilities and port and harbor areas, including vessels and harbor craft therein, would not be inimical to the security of the United States, he will request the holder to furnish, under oath in writing, such information as he deems pertinent and necessary for a determination on this issue.

(b) If the holder fails or refuses to furnish such information within thirty (30) days after receipt of the Commandant's request, the Commandant may issue the written notice provided for in §125.35(a).

(c) The holder's failure or refusal to furnish such information shall preclude a determination that the holder's character and habits of life are such as to warrant the belief that his presence on waterfront facilities, and port and harbor areas, including vessels and harbor craft therein, would not be inimical to the security of the United States.

(d) Upon receipt of such information as the Commandant may have required, the procedure prescribed in § 125.29(b) shall be followed.

(e) If the Commandant is satisfied that the character and habits of life of the holder are such as to warrant the belief that his presence on waterfront facilities, and port and harbor areas, including vessels and harbor craft therein, would not be inimical to the security of the United States, he shall notify the holder accordingly.

(f) If the Commandant is not satisfied that the character and habits of life of the holder are such as to warrant the belief that his presence on waterfront facilities, and port and harbor areas, including vessels and harbor craft therein, would not be inimical to the security of the United States, he shall notify the holder in writing as provided for in § 125.35.

[CGFR 59–63, 25 FR 1589, Feb. 24, 1960]

§ 125.35 Notice by Commandant.

(a) The notice provided for in §§ 125.31 and 125.33 shall contain a statement of the reasons why the Commandant is not satisfied that the character and habits of life of the applicant or holder are such as to warrant the belief that his presence on waterfront facilities, and port and harbor areas, including vessels and harbor craft therein, would not be inimical to the security of the United States. Such notice shall be as specific and detailed as the interests of national security shall permit and shall include pertinent information such as names, dates, and places in such detail as to permit reasonable answer.

(b) The applicant or holder shall have 20 days from the date of receipt of the notice of reasons to file written answer thereto. Such answer may include statements or affidavits by third parties or such other documents or evidence as the applicant or holder deems pertinent to the matters in question.

(c) Upon receipt of such answer the procedure prescribed in § 125.29(b) shall be followed.

(d) If the Commandant is satisfied that the character and habits of life of the applicant or holder are such as to warrant the belief that his presence on waterfront facilities, and port and harbor areas, including vessels and harbor craft therein, would not be inimical to the security of the United States, he shall, in the case of an applicant, direct that a Coast Guard Port Security Card be issued to the applicant, or, in the case of a holder, notify him accordingly.

(e) If the Commandant is not satisfied that the applicant's or holder's character and habits of life are such as to warrant the belief that his presence on waterfront facilities, and port and harbor areas, including vessels and harbor craft therein, would not be inimical to the security of the United States, the Commandant shall refer the matter to a Hearing Board for hearing and recommendation in accordance with the provisions of this part.

§ 125.37 Hearing Boards.

The Commandant may establish a Hearing Board in each Coast Guard District. The Commandant shall designate for each Hearing Board a Chairman, who shall be, so far as practicable, an officer of the Coast Guard. The Commandant shall designate, so far as practicable, a second member from a panel of persons representing labor named by the Secretary of Labor, and a third member from a panel of persons representing management named by the Secretary of Labor.

§ 125.39 Notice by Hearing Board.

Whenever the Commandant refers a matter to a Hearing Board, the Chairman shall:

(a) Fix the time and place of the hearing;

(b) Inform the applicant or holder of the names of the members of the Hearing Board, their occupations, and the businesses or organizations with which they are affiliated, of his privilege of challenge, and of the time and place of the hearing;

(c) Inform the applicant or holder of his privilege to appear before the Hearing Board in person or by counsel or representative of his choice, and to present testimonial and documentary evidence in his behalf, and to cross-examine any witnesses appearing before the Board; and

(d) Inform the applicant or holder that if within 10 days after receipt of

the notice he does not request an opportunity to appear before the Hearing Board, either in person or by counsel or representative, the Hearing Board will proceed without further notice to him.

§125.41 Challenges.

Within five days after receipt of the notice described in §125.39 the applicant or holder may request disqualification of any member of the Hearing Board on the grounds of personal bias or other cause. The request shall be accompanied by an affidavit setting forth in detail the facts alleged to constitute grounds for disqualification. The affidavit may be supplemented by an oral presentation if desired. If after due consideration the Chairman believes a challenged member is qualified notwithstanding the challenge, he shall notify the person who made the challenge and arrange to proceed with the hearing. If the person who made the challenge takes exception to the ruling of the Chairman, the exception and data relating to the claim of disqualification shall be made a matter of record. If the Chairman finds that there is reasonable ground for disqualification he shall furnish the person who made the challenge with the name of an alternate in lieu of the challenged member and arrange to proceed with the hearing. In the event the Chairman is challenged, he shall forthwith notify the Commandant, furnishing the grounds for the claim of disqualification, and the Commandant shall act upon the challenge in accordance with the foregoing procedure. In addition to the right to challenge for cause, a person who has requested a hearing shall have two peremptory challenges, one challenge for the management member and one challenge for the labor member of the Hearing Board. Should the management member be so challenged, the person who made the challenge may elect to have the management member replaced by another management member or by a member not representing either management or labor; if the member peremptorily challenged represents labor, the person who made the challenge may elect to have the labor member replaced by another labor member or by a member not representing either management or labor.

§125.43 Hearing procedure.

(a) Hearings shall be conducted in an orderly manner and in a serious, businesslike atmosphere of dignity and decorum and shall be expedited as much as possible.

(b) The hearing shall be in open or closed session at the option of the applicant or holder.

(c) Testimony before the Hearing Board shall be given under oath or affirmation.

(d) The Chairman of the Hearing Board shall inform the applicant or holder of his right to:

(1) Participate in the hearing;

(2) Be represented by counsel of his choice;

(3) Present witnesses and offer other evidence in his own behalf and in refutation of the reasons set forth in the Notice of the Commandant; and

(4) Cross-examine any witnesses offered in support of such reasons.

(e) Hearings shall be opened by the reading of the Notice of the Commandant and the answer thereto. Any statement and affidavits filed by the applicant or holder may be incorporated in the record by reference.

(f) The Hearing Board may, in its discretion, invite any person to appear at the hearing and testify. However, the Board shall not be bound by the testimony of such witness by reason of having called him and shall have full right to cross-examine the witness. Every effort shall be made to produce material witnesses to testify in support of the reasons set forth in the Notice of the Commandant, in order that such witnesses may be confronted and cross-examined by the applicant or holder.

(g) The applicant or holder may introduce such evidence as may be relevant and pertinent. Rules of evidence shall not be binding on the Hearing Board, but reasonable restrictions may be imposed as to the relevancy, competency and materiality of matters considered. If the applicant or holder is, or may be, handicapped by the nondisclosure to him of confidential sources, or by the failure of witnesses to appear, the Hearing Board shall take the fact into consideration.

(h) The applicant or holder or his counsel or representative shall have

the right to control the sequence of witnesses called by him.

(i) The Hearing Board shall give due consideration to documentary evidence developed by investigation, including membership cards, petitions bearing the applicant's or holder's signature, books, treatises or articles written by the applicant or holder and testimony by the applicant or holder before duly constituted authority.

(j) Complete verbatim stenographic transcription shall be made of the hearing by qualified reporters and the transcript shall constitute a permanent part of the record. Upon request, the applicant or holder or his counsel or representative shall be furnished, without cost, a copy of the transcript of the hearing.

(k) The Board shall reach its conclusion and base its determination on information presented at the hearing, together with such other information as may have been developed through investigation and inquiries or made available by the applicant or holder.

(l) If the applicant or holder fails, without good cause shown to the satisfaction of the chairman, to appear personally or to be represented before the Hearing Board, the Board shall proceed with consideration of the matter.

(m) The recommendation of the Hearing Board shall be in writing and shall be signed by all members of the Board. The Board shall forward to the Commandant, with its recommendation, a memorandum of reasons in support thereof. Should any member be in disagreement with the majority a dissent should be noted setting forth the reasons therefor. The recommendation of the Board, together with the complete record of the case, shall be sent to the Commandant as expeditiously as possible.

§ 125.45 Action by Commandant.

(a) If, upon receipt of the Board's recommendation, the Commandant is satisfied that the character and habits of life of the applicant or holder are such as to warrant the belief that his presence on waterfront facilities, and port and harbor areas, including vessels and harbor craft therein, would not be inimical to the security of the United States, he shall, in the case of an applicant, direct that a Coast Guard Port Security Card be issued to the applicant, or, in the case of a holder, notify him accordingly.

(b) If, upon receipt of the Board's recommendation, the Commandant is not satisfied that the character and habits of life of the applicant or holder are such as to warrant the belief that his presence on waterfront facilities, and port and harbor areas, including vessels and harbor craft therein, would not be inimical to the security of the United States, the Commandant shall:

(1) In the case of an applicant, notify him that a Coast Guard Port Security Card will not be issued to the applicant, or,

(2) In the case of a holder, revoke and require the surrender of his Coast Guard Port Security Card.

(c) Such applicant or holder shall be notified of his right, and shall have 20 days from the receipt of such notice within which, to appeal under this part.

§ 125.47 Appeals.

(a) The Commandant shall establish at Coast Guard Headquarters, Washington, DC, an Appeal Board to hear appeals provided for in this part. The Commandant shall designate for the Appeal Board a Chairman, who shall be so far as practicable, an officer of the Coast Guard. The Commandant shall designate, so far as practicable, a member from a panel of persons representing management nominated by the Secretary of Labor, and a member from a panel of persons representing labor nominated by the Secretary of Labor. The Commandant shall insure that persons designated as Appeal Board members have suitable security clearance. The Chairman of the Appeal Board shall make all arrangements incident to the business of the Appeal Board.

(b) If an applicant or holder appeals to the Appeal Board within 20 days after receipt of notice of his right to appeal under this part, his appeal shall be handled under the same procedure as that specified in § 125.39, and the privilege of challenge may be exercised through the same procedure as that specified in § 125.41.

(c) Appeal Board proceedings shall be conducted in the same manner as that specified in §125.43.

§125.49 Action by Commandant after appeal.

(a) If, upon receipt of the Appeal Board's recommendation, the Commandant is satisfied that the character and habits of life of the applicant or holder are such as to warrant the belief that his presence on waterfront facilities, and port and harbor areas, including vessels and harbor craft therein, would not be inimical to the security of the United States, he shall, in the case of an applicant, direct that a Coast Guard Port Security Card be issued to the applicant, or in the case of a holder, notify him accordingly.

(b) If, upon receipt of the Appeal Board's recommendation, the Commandant is not satisfied that the character and habits of life of the applicant or holder are such as to warrant the belief that his presence on waterfront facilities, and port and harbor areas, including vessels and harbor craft therein, would not be inimical to the security of the United States, the Commandant shall notify the applicant or holder that his appeal is denied.

§125.51 Replacement of lost Coast Guard Port Security Card.

(a) Any person whose Coast Guard Port Security Card has been stolen, lost, or destroyed shall report that fact to a Coast Guard Port Security Unit or Captain of the Port as soon thereafter as possible.

(b) A person who has lost a Coast Guard Port Security Card may apply for a replacement card by submitting ''An Application for Replacement of Lost Port Security Card'' (Form CG 2685A) to a Coast Guard Port Security Unit. A replacement will be issued only after a full explanation of the loss of the Coast Guard Port Security Card is made in writing to the Coast Guard and after a full check is made and authorization is granted by the Commandant.

(c) Any person to whom a Coast Guard Port Security Card has been issued as a replacement for a lost card, shall immediately surrender the original card to the nearest Coast Guard Port Security Unit or Captain of the Port if the original card should be recovered.

§125.53 Requirements for credentials; certain vessels operating on navigable waters of the United States (including the Great Lakes and Western Rivers).

(a) Every person desiring access to vessels, except public vessels, falling within any of the categories listed below, as a master, person in charge, or member of the crew thereof, shall be required to be in possession of one of the identification credentials listed in §125.09.

(1) Towing vessels, barges, and lighters operating in the navigable waters of the continental United States other than the Great Lakes and Western Rivers.

(2) Harbor craft, such as water taxis, junk boats, garbage disposal boats, bum boats, supply boats, repair boats, and ship cleaning boats, which in the course of their normal operations service or contact vessels, foreign or domestic, public or merchant, in the navigable waters of the continental United States other than the Great Lakes and Western Rivers.

(b) The term ''master, person in charge, or member of the crew'' shall be deemed to include any person who serves on board in any capacity concerned with the operation, maintenance, or administration of the vessel or its cargo.

(c) Where the Coast Guard Port Security Card (Form CG 2514) is to be used as the identification required by paragraph (a) of this section, application for such card may be made immediately by the persons concerned. The issuance of the Coast Guard Port Security Card shall be in the form and manner prescribed by §125.11.

(d) At the discretion of the District Commander any person desiring access to vessels of the categories named in this section, who may be required by the provisions hereof to possess identification credentials, may be furnished a letter signed by the District Commander or the Captain of the Port and this letter shall serve in lieu of a Coast Guard Port Security Card and will authorize such access for a period not to exceed 60 days, and such a letter issued

shall be deemed to be satisfactory identification within the meaning of § 125.09. The issuance of the letter shall be subject to the following conditions:

(1) The services of the person are necessary to avoid delay in the operation of the vessel;

(2) The person does not possess one of the identification credentials listed in § 125.09.

(3) The person has filed his application for a Coast Guard Port Security Card or submits his application before the letter is issued; and,

(4) The person has been screened by the District Commander or Captain of the Port and such officer is satisfied concerning the eligibility of the applicant to receive a temporary letter.

[CGFR 56–15, 21 FR 2940, May 3, 1956, as amended by CGFR 58–51, 21 FR 9339, Nov. 30, 1956]

§ 125.55 Outstanding Port Security Card Applications.

A person who has filed an application for a Coast Guard Port Security Card and who did not receive such a document prior to May 1, 1956, shall submit a new application in accordance with the requirements of this part.

[CGFR 61–54, 26 FR 11862, Dec. 12, 1961]

§ 125.57 Applications previously denied.

A person who has been denied a Coast Guard Port Security Card before May 1, 1956, may file a new application for such a document in accordance with the requirements of this part.

PART 126—Handling of Class 1 (Explosive) Materials or Other Dangerous Cargoes within or Contiguous to Waterfront Facilities

Sec.

126.01 General definitions.
126.05 Designated waterfront facility.
126.07 Dangerous cargo.
126.09 Designated dangerous cargo.
126.10 Cargo of particular hazard.
126.11 Waiver authority based on local or unusual conditions.
126.13 Designation of waterfront facilities.
126.15 Conditions for designation as designated waterfront facility.
126.16 Conditions for designating a ''facility of particular hazard.''
126.17 Permits required for handling designated dangerous cargo.
126.19 Issuance of permits for handling designated dangerous cargo.
126.21 Permitted transactions.
126.23 Termination or suspension of permits.
126.25 Penalties for handling designated dangerous cargo without permit.
126.27 General permit for handling dangerous cargo.
126.28 Ammonium nitrate, ammonium nitrate fertilizers, fertilizer mixtures, or nitro carbo nitrate; general provisions.
126.29 Supervision and control of dangerous cargo.
126.31 Termination or suspension of general permit.
126.33 Penalties for handling dangerous cargo without permit.
126.35 Primary responsibility.
126.37 Separability.

AUTHORITY: 33 U.S.C. 1231; 49 CFR 1.46.

§ 126.01 General definitions.

Commandant means the Commandant of the United States Coast Guard.

Captain of the Port (COTP) means the officer of the Coast Guard, under the command of a District Commander, so designated by the Commandant for the purpose of giving immediate direction to Coast Guard law enforcement activities within an assigned area.

District Commander means the officer of the Coast Guard designated by the Commandant to command a Coast Guard District.

Net tons means the net weight of a materials in tons.

Net weight means a measure of weight referring only to the contents of a package, tank or container and does not include the weight of any packaging material, or containing devices.

Waterfront facility means all piers, wharves, docks, and similar structures to which a vessel may be secured; areas of land, water, or land and water under and in immediate proximity to them; buildings on such structures or contiguous to them and equipment and materials on such structures or in such buildings. This term does not include facilities directly operated by the Department of Defense.

[CGD 78–023, 44 FR 4642, Jan. 22, 1979]

§126.05 Designated waterfront facility.

(a) Designated waterfront facility. The term *designated waterfront facility* means a waterfront facility designated by §126.13 for the handling and storage of, and for vessel loading and discharging of: any hazardous material subject to the Dangerous Cargoes Regulations in 46 CFR part 148; and any hazardous material subject to the Hazardous Materials Regulations (49 CFR parts 170–179), except for those materials preceded by an ''A'' in the Hazardous Materials Table, in 49 CFR 172.101 and for those materials carried as bulk liquids.

(b) *Facility of particular hazard* means a designated waterfront facility that is authorized to handle a cargo of particular hazard, as defined in §126.10.

[CGD 78–023, 44 FR 4642, Jan. 22, 1979, as amended by CGD 75–238, 44 FR 63675, Nov. 5, 1979; CGD 75–238, 45 FR 57393, Aug. 28, 1980; CGD 78–038, 53 FR 3376, Feb. 7, 1988; CGD 86–034, 55 FR 36252, Sept. 4, 1990; CGD 92–050, 59 FR 39965, Aug. 5, 1994; CGD 88–049, 60 FR 39794, Aug. 3, 1995]

§126.07 Dangerous cargo.

The term *dangerous cargo* means all explosives and other hazardous materials or cargo covered by—

(a) Dangerous Cargoes, 46 CFR part 148; or

(b) Hazardous Materials, 49 CFR parts 170–179, except for those materials preceded by an ''A'' in the hazardous Materials Table, 49 CFR 172.101.

[CGD 78–023, 44 FR 4643, Jan. 22, 1979, as amended by CGD 86–034, 55 FR 36252, Sept. 4, 1990; CGD 92–050, 59 FR 39965, Aug. 5, 1994]

§126.09 Designated dangerous cargo.

The term *designated dangerous cargo* means Division 1.1 and 1.2 explosives, as defined in 49 CFR 173.50.

[CGD 92–050, 59 FR 39965, Aug. 5, 1994]

§126.10 Cargo of particular hazard.

Cargo of particular hazard means any of the following:

(a) Division 1.1 or 1.2 explosives, as defined in 49 CFR 173.50.

(b) Oxidizing material or blasting agent for which a permit is required under 49 CFR 176.415.

(c) Highway route controlled quantity radioactive material, as defined in 49 CFR 173.403(1), or Fissile Class III shipments of fissile radioactive material, as defined in 49 CFR 173.455(a)(3).

[CGD 75–238, 45 FR 57394, Aug. 28, 1980, as amended by CGD 84–039, 50 FR 8613, Mar. 4, 1985; CGD 78–038, 53 FR 3376, Feb. 7, 1988; CGD 86–034, 55 FR 36252, Sept. 4, 1990; CGD 92–050, 59 FR 39965, Aug. 5, 1994; CGD 88–049, 60 FR 39794, Aug. 3, 1995]

§126.11 Waiver authority based on local or unusual conditions.

Whenever the Commandant, the District Commander, or the Captain of the Port finds that the application of any provisions contained in §§126.15 and 126.16 is not necessary to the safety or security of the port and vessels and waterfront facilities therein, or that its application is not practical because of local conditions or because the materials or personnel required for compliance are not available, or because the requirements of the national defense justify a departure from such provision, the Commandant, the District Commander, or the Captain of the Port may waive compliance with such provision, to the extent and under such requirements as they determine.

[CGD 78–023, 44 FR 4643, Jan. 22, 1979]

§126.13 Designation of waterfront facilities.

(a) Waterfront facilities which fulfill the conditions required in §126.15, unless waived under provisions of §126.11, and only such waterfront facilities are designated for the handling, storing, stowing, loading, discharging, or transporting of dangerous cargo, subject to compliance with other applicable requirements and provisions set forth in this part.

(b) Handling, storing, stowing, loading, discharging, or transporting dangerous cargo at any waterfront facility other than one designated by this section is hereby prohibited, and violation of this prohibition will subject the violator to the civil or criminal penalties provided in section 13 of the Ports and Waterways Safety Act (33 U.S.C. 1232).

[CGFR 57–52, 22 FR 10302, Dec. 20, 1957, as amended by CGD 78–023, 44 FR 4643, Jan. 22, 1979]

§ 126.15 Conditions for designation as designated waterfront facility.

The conditions referred to in § 126.13 for designation of a waterfront facility for the purpose of handling, storing, stowing, loading, discharging, or transporting of dangerous cargo shall be as follows:

(a) *Guards.* That guards are provided by the owner or operator of the waterfront facility for the protection thereof in such numbers and of such qualifications as to assure adequate surveillance, prevent unlawful entrance, detect fire hazards, and check the readiness of protective equipment.

(b) *Smoking.* That smoking is prohibited on the waterfront facility except at such portions thereof as may be designated by the owner or operator thereof: *Provided,* That smoking in such areas shall only be permitted in accordance with local ordinances and regulations and that signs are conspicuously posted marking such authorized smoking areas and that ''No Smoking'' signs are conspicuously posted elsewhere on the waterfront facility.

(c) *Welding or hot work.* Oxyacetylene or similar welding or burning or other hot work including electric welding or the operation of equipment is prohibited on waterfront facilities or on vessels moored thereto, during the handling, storing, stowing, loading, discharging, or transporting of explosives. Such work may not be conducted on waterfront facilities or vessels moored thereto while either the facility or vessel is handling, storing, stowing, loading, discharging, or transporting dangerous cargo without the specific approval of the Captain of the Port.

(d) *Trucks and other motor vehicles.* That trucks and other motor vehicles are not permitted to remain or park upon the waterfront facility except under the following conditions:

(1) When actually awaiting opportunity to load or discharge cargo, ship supplies, or passengers and is attended by a driver.

(2) When loading or discharging tools, equipment or materials incident to maintenance, repair, or alterations and is attended by a driver.

(3) When the vehicle is headed toward an unimpeded exit and is attended by a driver.

(4) When a vehicle is handled and stored as an item of cargo.

(5) When parking areas are designated and permitted in accordance with local ordinances and regulations and provided no fire lanes are blocked nor exits impeded by their presence, passenger vehicles may be parked in such portions of the waterfront facility as may be designated and marked off by the owner or operator.

(e) *Pier automotive equipment.* That tractors, stackers, lift trucks, hoisters and other equipment driven by internal combustion engines used on the waterfront facility are of such construction and condition and free from excess grease, oil, or lint as not to constitute a fire hazard; that each unit of such equipment is provided with an approved type fire extinguisher attached, except where waterfront facilities are provided with fire extinguishers approved by the Captain of the Port, as being adequate in numbers, type and location for additional protection of pier automotive equipment; that, when not in use, such equipment is stored in a safe manner and location; that gasoline or other fuel used for such equipment is stored and handled in accordance with accepted safe practices and is not stored on the waterfront facility, except in conformity with paragraph (g) of this section; and that refueling of such equipment or any vehicle is prohibited on any pier or wharf within the waterfront facility.

(f) *Rubbish and waste materials.* That the waterfront facility is free from rubbish, debris, and waste materials. Burning rubbish in an open fire on a waterfront facility is prohibited.

(g) *Maintenance stores and supplies.* That supplies classified as dangerous by the provisions of the Hazardous Materials Regulations (49 CFR 170–179) except those materials preceded by an ''A'' in the Hazardous Materials Table, 49 CFR 172.101, to be used in connection with operation or maintenance of the property or facility, are not stored on any pier or wharf within the waterfront facility and are not stored elsewhere on the waterfront facility except in amounts necessary for normal current

operating conditions; that these supplies are stored in a compartment remote from combustible material, constructed so as to be readily accessible and provide safe storage; that storage compartments are kept clean and maintained free of scrap materials, empty containers, soiled wiping rags, waste, and other debris; that covered metal containers are provided for disposal of used wiping cloths and are emptied at the end of each working day; and that clothing lockers are maintained clean and orderly and properly ventilated.

(h) *Electric wiring.* That new installations of electric wiring and equipment are made in accordance with accepted safe practices (conformity with the requirements of the National Electric Code (current edition) and the requirements of applicable local regulations shall be deemed evidence of compliance with such accepted safe practices); that materials, fittings, and devices are of type and character approved for the intended use by Underwriters Laboratories, Inc., Associated Factory Mutual Laboratories, or United States National Bureau of Standards; that existing electric wiring is maintained in a safe condition, free of defects or modifications which may cause fire or personal injury; that defective or dangerous wiring, equipment, and devices are permanently disconnected from sources of energy.

(i) *Heating equipment and open fires.* That heating equipment is safely installed and maintained in good operating condition; that adequate clearances to prevent undue heating of nearby combustible materials are maintained between heating appliances, chimneys, stove pipes, gas vents, or other heat producing elements, and any combustible materials of the floor, walls, partitions or roofs; that in general, clearances are such that continuous operation of the heat producing device at full capacity will not increase the temperature of nearby woodwork more than 90° above the ambient temperature; that, where necessary to prevent contact with movable combustible materials, heating appliances are enclosed or screened; that spark arresters are provided on chimneys or appliances burning solid fuel used in locations where sparks constitute a hazard to nearby combustible materials. Open fires or fires in barrels, drums, or similar apparatus are prohibited. (As a guide to safe installation of heating equipment, the appropriate chapters of the National Board of Fire Underwriters Building Code (current edition) are recommended.)

(j) *Fire extinguishing equipment.* That fire extinguishing appliances are made available in adequate quantities, locations, and types; that first aid fire appliances are installed and maintained in accordance with accepted safe practices (conformity with the requirements prescribed in the current ''Standards for the Installation, Maintenance and Use of Portable Fire Extinguishers,'' issued by the National Fire Protection Association, shall be deemed evidence of compliance with such accepted safe practices); that fire extinguishing equipment, fire alarm systems and devices, and fire doors and other safety equipment are maintained in good operating condition at all times; that provision is made so that, when hazards arise which require such precaution, emergency hose lines will be led out and other emergency firefighting equipment will be placed immediately adjacent to such hazards.

(k) *Marking of fire appliance locations.* That the locations of all fire appliances, including hydrants, standpipe and hose stations, fire extinguishers, and fire alarm boxes, are conspicuously marked; and that ready accessibility to such appliances is maintained.

(l) *Lighting.* That subject to applicable dimout and blackout regulations, such waterfront facility is adequately illuminated during the handling, storing, stowing, loading, discharging or transporting of dangerous cargo thereon; and that kerosene and gasoline lamps and lanterns are not used on such waterfront facility.

(m) *Arrangement of cargo, freight, merchandise or material.* That cargo, freight, merchandise or material is arranged on the waterfront facility according to the individual structure of such facility, in a manner to permit complete access for the purpose of fire extinguishment; that, except on facilities used primarily for the transfer of railroad or highway vehicles to or from

cargo vessels and carfloats; cargo, freight, merchandise or other material is placed on the waterfront facility in accordance with the following:

(1) At least two feet of clear and open space shall be maintained free of rubbish, dunnage, or other obstructions between cargo, freight, merchandise, or other material piles and both sides of the walls of the waterfront facility, fire walls or fire stops in enclosed waterfront facilities. This distance shall be measured from the most prominent projection of the wall such as studding, bracings, or other obstructions that are part of the structure. In an unenclosed facility, 2 feet of clear and open space shall be maintained free of rubbish, dunnage, or other obstructions between cargo, freight, merchandise or other materials and the sides of the pier.

(2) Inflammable or combustible cargo, freight, merchandise or material, not including bulk cargo, shall not be tiered higher than 12 feet. All cargo, freight, merchandise or other materials including inflammable or combustible cargo, freight, merchandise or materials shall be so tiered as to maintain a clearance between the upper level of the top tier and trusses, beams, girders, or other structural members of not less than 36″, and between such upper level and sprinkler heads a clearance of at least 12″ shall be maintained.

(3) There shall be maintained at least four feet of clear and open operating space around any fire alarm box, standpipe, fire hose, sprinkler valve, fire door, deck hatch, or first-aid fire appliance.

(4) When first-aid fire appliances, alarm boxes, other safety equipment or deck hatches are located in a space surrounded by cargo, freight, merchandise, or other materials, there shall be maintained a straight, free, and open space at least three feet in width running therefrom to the center aisle. This space shall be kept clear of all rubbish, dunnage, and other obstruction.

(5) A main aisle of at least twenty feet in width shall be maintained the entire length of the waterfront facility if control of fire requires trucks to come on the pier. The aisle may be reduced to eight feet in width if such access by fire trucks is not required.

(6) Cross aisles, at least five (5) feet wide and straight shall be maintained at intervals not exceeding seventy-five (75) feet, and extending to the side of the waterfront facility.

(n) *Adequacy of guarding, fire extinguishing equipment, and lighting.* That the word ''adequate'', as used in paragraphs (a), (j), and (l) of this section with respect to guarding, fire extinguishing equipment, and lighting, respectively, means that determination which a reasonable person would make under the circumstances of the particular case. Unless there is gross noncompliance, the judgment and determination of the operator of the facility will be acceptable as fulfilling the requirements unless and until the Captain of the Port inspects the facility and notifies the operator thereof in writing in what respect the guarding, fire extinguishing equipment, or lighting, is deemed inadequate and affords such operator an opportunity to correct the deficiency.

[CGFR 51–37, 16 FR 8677, Aug. 28, 1951]

EDITORIAL NOTE: For FEDERAL REGISTER citations affecting § 126.15, see the List of CFR Sections Affected in the Finding Aids section of this volume.

§ 126.16 Conditions for designating a "facility of particular hazard."

(a) *Basic requirements.* The facility shall comply with all the conditions in § 126.15 except where specifically waived by § 126.11.

(b) *Warning alarms.* Warning alarms shall be installed at the waterside of such a facility to warn approaching or transiting water traffic of immediate danger in the event of fire or cargo release. Warning alarms shall be of the siren type, or the emergency rotating flashing light type, and be of sufficient intensity to be heard, or seen, a distance of 1 mile during normal facility working conditions. The alarm signal shall not conflict with local municipal prescription.

[CGFR 67–93, 32 FR 20774, Dec. 23, 1967]

§126.17 Permits required for handling designated dangerous cargo.

Designated dangerous cargo may be handled, loaded, discharged, or transported at any designated waterfront facility only if a permit therefor has been issued by the Captain of the Port. This permit requirement may be waived, at the discretion of the Captain of the Port, when such cargoes are contained within railroad cars or highway vehicles which are moved on or across a waterfront facility used primarily for the transfer of railroad cars or highway vehicles to or from a railroad or highway vehicle ferry or carfloat; provided such designated cargoes are not removed from, or placed in, the railroad car or highway vehicle while it is in or on such waterfront facility.

[CGFR 58–43, 23 FR 8542, Nov. 1, 1958]

§126.19 Issuance of permits for handling designated dangerous cargo.

Upon the application of the owners or operators of a designated waterfront facility or of their authorized representatives, the Captain of the Port is authorized to issue a permit for each transaction of handling, loading, discharging, or transporting designated dangerous cargo at such waterfront facility provided the following requirements are met:

(a) The facility shall comply in all respect with the regulations in this subchapter.

(b) The quantity of designated dangerous cargo, except Class 1 (explosive) materials shipped by or for the Armed Forces of the United States, on the waterfront facility and vessels moored thereto shall not exceed the limits as to maximum quantity, isolation and remoteness established by local, municipal, territorial, or State authorities. Each permit issued under these conditions shall specify that the limits so established shall not be exceeded.

(c) The quantity of designated dangerous cargo consisting of Class 1 (explosive) materials shipped by or for the Armed Forces of the United States on the waterfront facility and vessels moored thereto shall not exceed the limits as to maximum quantity, isolation and remoteness as established by the Captain of the Port. Each permit issued under these conditions shall specify that the limits so established shall not be exceeded.

[CGFR 53–27, 18 FR 5348, Sept. 3, 1953, as amended by CGD 92–050, 59 FR 39965, Aug. 5, 1994]

§126.21 Permitted transactions.

All permits issued pursuant to §126.19 are hereby conditioned upon the observance and fulfillment of the following:

(a) The conditions set forth in §126.15 shall at all times be strictly observed.

(b) No amount of designated dangerous cargo, except Class 1 (explosive) materials shipped by or for the Armed Forces of the United States, in excess of the maximum quantity established by local, municipal, territorial, or State authorities shall be present on the waterfront facility and vessels moored thereto.

(c) Designated dangerous cargo shall not be brought onto the waterfront facility from shore except when laden within a railroad car or highway vehicle and shall remain in such railroad car or highway vehicle except when removed as an incident of its prompt transshipment. Designated dangerous cargo shall not be brought onto the waterfront facility from a vessel except as an incident of its prompt transshipment by railroad car or highway vehicle.

(d) No other dangerous cargo shall be on the waterfront facility during the period of transactions involving designated dangerous cargo, unless its presence is authorized by the Captain of the Port. This shall not apply to maintenance stores and supplies on the waterfront facility in conformity with §126.15(g).

[CGFR 53–27, 18 FR 5348, Sept. 3, 1953, as amended by CGD 92–050, 59 FR 39965, Aug. 5, 1994]

§126.23 Termination or suspension of permits.

Any permit issued pursuant to §126.19 shall terminate automatically at the conclusion of the transaction for which the permit has been issued and may be terminated, or suspended, prior thereto by the Captain of the Port whenever he deems that the security or safety of

the port or vessels or waterfront facilities therein so requires. Confirmation of such termination or suspension by the Captain of the Port shall be given to the permittee in writing.

[CGFR 51–37, 16 FR 8679, Aug. 28, 1951]

§ 126.25 Penalties for handling designated dangerous cargo without permit.

Handling, loading, discharging, or transporting any designated dangerous cargo without a permit, as provided under § 126.17, being in force, will subject persons responsible therefore to the civil or criminal penalties provided in Section 13 of the Ports and Waterways Safety Act, as amended (33 U.S.C. 1232).

[CGD 78–023, 44 FR 4643, Jan. 22, 1979]

§ 126.27 General permit for handling dangerous cargo.

A general permit is hereby issued for the handling, storing, stowing, loading, discharging or transporting of dangerous cargo (other than designated dangerous cargo) in bulk, portable tanks, containers, or packagings, at designated waterfront facilities, conditioned upon the observance and fulfillment of the following:

(a) The conditions set forth in § 126.15 shall at all times be strictly observed.

(b) The following classes of hazardous materials classified as dangerous for transportation by vessel as listed in the Hazardous Materials Regulations Table (49 CFR 172.101), in the amounts specified, shall not be handled, stored, stowed, loaded, discharged, or transported, except when contained within railroad or high vehicles being transported across or on waterfront facilities used primarily for the transfer of railroad or highway vehicles to or from a railroad car ferry or highway vehicle ferry, or carfloats, without prior notification to the Captain of the Port:

(1) Division 1.3 (explosive) materials (as defined in 49 CFR 173.50), in excess of 1 net ton at any one time.

(2) Division 1.4 (explosive) materials (as defined in 49 CFR 173.50), in excess of 10 net tons at any one time.

(3) Flammable liquids, in excess of 10 net tons at any one time.

(4) Flammable solids or oxidizers, in excess of 100 net tons at any one time.

(5) Flammable gases, in excess of 10 net tons at any one time.

(6) Poisons (Class A).

(7) A bulk shipment of a cargo of particular hazard as defined in §126.10(d).

(8) A bulk shipment of a cargo of particular hazard, as defined in § 126.10(d).

(c) No Class 1 (explosive) materials (as defined in 49 CFR 173.50) or other dangerous cargoes prohibited from, or not permitted for, transportation by 46 CFR part 148 or 49 CFR parts 171 through 179 may be present on the waterfront facility.

(d) Flammable liquids and compressed gases shall be so handled and stored as to provide maximum separation from acids, corrosive liquids, or combustible materials. Storage for flammable solids or oxidizers shall be so arranged as to prevent moisture coming in contact therewith.

(e) Acids and corrosive liquids shall be so handled and stored as to prevent such acids and liquids, in event of leakage, from contacting any organic materials.

(f) Poisonous gases, poisonous liquids, and poisonous solids shall be so handled and stored as to prevent their contact with acids, corrosive liquids, flammable liquids or flammable solids.

(g) Dangerous cargo which may be stored on the waterfront facility shall be arranged in such manner as to retard the spread of fire. This may be accomplished by interspersing dangerous cargo with inert or less combustible materials.

(h) All dangerous cargo stored on the waterfront facility shall be packaged, marked, and labeled in accordance with 49 CFR parts 170–179.

(i) Storage of all radioactive materials shall be so arranged as to preclude a gamma radiation in excess of 200 milliroentgens per hour or physical equivalent at any readily accessible surface.

[CGD 78–023, 44 FR 4643, Jan. 22, 1979, as amended by CGD 75–238, 44 FR 63676, Nov. 5, 1979; CGD 75–238, 45 FR 57394, Aug. 28, 1980; CGD 92–050, 59 FR 39965, Aug. 5, 1994]

§126.28 Ammonium nitrate, ammonium nitrate fertilizers, fertilizer mixtures, or nitro carbo nitrate; general provisions.

(a) When any item of ammonium nitrate, ammonium nitrate fertilizers, fertilizer mixtures, or nitro carbo nitrate, described and defined as an oxidizer by the regulations of 49 CFR part 173 is handled, stored, stowed, loaded, discharged or transported on a waterfront facility, the following provisions shall apply:

(1) All outside containers shall be marked with the proper shipping name of the nitrate packed within the container.

(2) The building on a waterfront facility used for storage of any of these materials shall be of such construction as to afford good ventilation.

(3) Storage of any of these materials shall be at a safe distance from electric wiring, steam pipes, radiators or any heating mechanism.

(4) These materials shall be separated by a fire resistant wall or by a distance of at least 30 feet from organic materials or other chemicals and substances which could cause contamination such as flammable liquids, combustible liquids, corrosive liquids, chlorates, permanganates, finely divided metals, caustic soda, charcoal, sulfur, cotton, coal, fats, fish oils or vegetable oils.

(5) Storage of any of these materials shall be in a clean area upon clean wood dunnage, or on pallets over a clean floor. In the case of a concrete floor, storage may be made directly on the floor if it is first covered with a moisture barrier such as a polyethylene sheet or asphaltic laminated paper.

(6) Any spilled material shall be promptly and thoroughly cleaned up and removed from the waterfront facility. If any spilled material has remained in contact with a wooden floor for any length of time the floor shall be scrubbed with water and all spilled material shall be thoroughly dissolved and flushed away.

(7) An abundance of water for firefighting shall be readily available.

(8) Open drains, traps, pits or pockets which could be filled with molten ammonium nitrate if a fire occurred (and thus become potential detonators for the storage piles) must be eliminated or plugged.

NOTE: See 49 CFR 176.415 for permit requirements for nitro carbo nitrate and certain ammonium nitrates.

[CGD 78–023, 44 FR 4644, Jan. 22, 1979]

§126.29 Supervision and control of dangerous cargo.

(a) *Authority*. The Captain of the Port is authorized to require that any transaction of handling, storing, stowing, loading, discharging, or transporting the dangerous cargo covered by this subchapter shall be undertaken and continued only under the immediate supervision and control of the Captain of the Port or his duly authorized representative. In case the Captain of the Port exercises such authority, all directions, instructions, and orders of the Captain of the Port or his representative, not inconsistent with this part, with respect to such handling, storing, stowing, loading, discharging, and transporting; with respect to the operation of the waterfront facility; with respect to vessels handling, stowing, loading, or discharging of dangerous cargo at anchorages when the operations are under the immediate control and supervision of the Captain of the Port or his duly authorized representative; with respect to the ingress and egress of persons, articles, and things and to their presence on the waterfront facilty or vessel; and with respect to vessels approaching, moored at, and departing from the waterfront facility, shall be promptly obeyed.

(b) *Reporting discharge of dangerous liquid commodities into the waters of the United States.* To enhance the safety of the port and to protect vessels, their cargo, and waterfront facilities therein, the discharge into the navigable waters of the United States of petroleum products, petroleum byproducts or other dangerous liquid commodities which may create a hazard or toxic condition in the port area will be immediately reported to the Captain of the Port or District Commander by the owner or master of the vessel from which the discharge occurred, or the owner or operator of a waterfront facility from which the discharge occurred.

[CGFR 69–89, 34 FR 17478, Oct. 29, 1969]

§ 126.31 Termination or suspension of general permit.

The Captain of the Port is hereby authorized to terminate or to suspend the general permit granted by § 126.27 in respect to any particular designated waterfront facility whenever he deems that the security or safety of the port or vessels or waterfront facilities therein so requires. Confirmation of such termination or suspension shall be given to the permittee in writing. After such termination, the general permit may be revived by the District Commander with respect to such particular waterfront facility upon a finding by him that the cause of termination no longer exists and is unlikely to recur. After such suspension, the general permit shall be revived by the Captain of the Port with respect to such particular waterfront facility when the cause of suspension no longer exists, and he shall so advise the permittee in writing.

[CGFR 51–37, 16 FR 8680, Aug. 28, 1951, as amended by CGFR 69–89, 34 FR 17479, Oct. 29, 1969]

§ 126.33 Penalties for handling dangerous cargo without permit.

Handling, storing, stowing, loading, discharging, or transporting any dangerous cargo covered by § 126.27 under circumstances not covered by the general permit granted in § 126.27 or when such general permit is not in force will subject persons responsible therefor to the civil or criminal penalties provided in Section 13 of the Ports and Waterways Safety Act, as amended (33 U.S.C. sec. 1232).

[CGD 78–023, 44 FR 4644, Jan. 22, 1979]

§ 126.35 Primary responsibility.

Nothing contained in the rules, regulations, conditions, and designations in this part shall be construed as relieving the masters, owners, operators, and agents of vessels, docks, piers, wharves, or other waterfront facilities from their primary responsibility for the security of such vessels, docks, piers, wharves, or waterfront facilities.

[CGFR 51–37, 16 FR 8680, Aug. 28, 1951]

§ 126.37 Separability.

If any provision of the rules, regulations, conditions, or designations contained in this part or the application of such provision to any person, waterfront facility, or circumstances shall be held invalid, the validity of the remainder of the rules, regulations, conditions, or designations contained in this part and applicability of such provision to other persons, waterfront facilities, or circumstances, shall not be affected thereby.

[CGFR 51–37, 16 FR 8680, Aug. 28, 1951]

PART 127—WATERFRONT FACILITIES HANDLING LIQUEFIED NATURAL GAS AND LIQUEFIED HAZARDOUS GAS

Subpart A—General

Sec.
127.001 Applicability.
127.003 Incorporation by reference.
127.005 Definitions.
127.007 Letter of intent.
127.009 Letter of recommendation.
127.011 Inspections of waterfront facilities.
127.013 Suspension of transfer operations.
127.015 Appeals.
127.017 Alternatives.
127.019 Operations Manual and Emergency Manual: Procedures for examination.

Subpart B—Waterfront Facilities Handling Liquefied Natural Gas

127.101 Design and construction: General.
127.103 Piers and wharves.
127.105 Layout and spacing of marine transfer area for LNG.
127.107 Electrical power systems.
127.109 Lighting systems.
127.111 Communications systems.
127.113 Warning signs.

EQUIPMENT

127.201 Sensing and alarm systems.
127.203 Portable gas detectors.
127.205 Emergency shutdown.
127.207 Warning alarms.

OPERATIONS

127.301 Persons in charge of shoreside transfer operations: Qualifications and certification.
127.303 Compliance with suspension order.
127.305 Operations Manual.
127.307 Emergency Manual.
127.309 Operations Manual and Emergency Manual: Use.

127.311 Motor vehicles.
127.313 Bulk storage.
127.315 Preliminary transfer inspection.
127.317 Declaration of inspection.
127.319 LNG transfer.
127.321 Release of LNG.

MAINTENANCE

127.401 Maintenance: General.
127.403 Inspections.
127.405 Repairs.
127.407 Testing.
127.409 Records.

PERSONNEL TRAINING

127.501 Applicability.
127.503 Training: General.

FIREFIGHTING

127.601 Fire equipment: General.
127.603 Portable fire extinguishers.
127.605 Emergency outfits.
127.607 Fire main systems.
127.609 Dry chemical systems.
127.611 International shore connection.
127.613 Smoking.
127.615 Fires.
127.617 Hotwork.

SECURITY

127.701 Security on existing facilities.
127.703 Access to the marine transfer area for LNG.
127.705 Security systems.
127.707 Security personnel.
127.709 Protective enclosures.
127.711 Communications.

Subpart C—Waterfront Facilities Handling Liquefied Hazardous Gas

DESIGN AND CONSTRUCTION

127.1101 Piping systems.
127.1102 Transfer hoses and loading arms.
127.1103 Piers and wharves.
127.1105 Layout and spacing of marine transfer area for LHG.
127.1107 Electrical systems.
127.1109 Lighting systems.
127.1111 Communication systems.
127.1113 Warning signs.

EQUIPMENT

127.1203 Gas detection.
127.1205 Emergency shutdown.
127.1207 Warning alarms.
127.1209 Respiratory protection.

OPERATIONS

127.1301 Persons in charge of transfers for the facility: Qualifications and certification.
127.1302 Training.
127.1303 Compliance with suspension order.
127.1305 Operations Manual.
127.1307 Emergency Manual.
127.1309 Operations Manual and Emergency Manual: Use.
127.1311 Motor vehicles.
127.1313 Storage of hazardous materials.
127.1315 Preliminary transfer inspection.
127.1317 Declaration of Inspection.
127.1319 Transfer of LHG.
127.1321 Release of LHG.
127.1325 Access to marine transfer area for LHG.

MAINTENANCE

127.1401 General.
127.1403 Inspections.
127.1405 Repairs.
127.1407 Tests.
127.1409 Records.

FIREFIGHTING EQUIPMENT

127.1501 General.
127.1503 Portable fire extinguishers.
127.1505 Emergency response and rescue.
127.1507 Water systems for fire protection.
127.1509 Equipment for controlling and extinguishing fires.
127.1511 International shore connection.

FIRE PROTECTION

127.1601 Smoking.
127.1603 Hotwork.
127.1605 Other sources of ignition.

AUTHORITY: 33 U.S.C. 1231; 49 CFR 1.46.

SOURCE: CGD 78–038, 53 FR 3376, Feb. 7, 1988, unless otherwise noted.

Subpart A—General

§ 127.001 Applicability.

(a) Subparts A and B of this part apply to the marine transfer area for LNG of each new waterfront facility handling LNG and to new construction in the marine transfer area for LNG of each existing waterfront facility handling LNG.

(b) Subpart A of this part and §§ 127.301 through 127.617 apply to the marine transfer area for LNG of each active existing waterfront facility handling LNG.

(c) Sections 127.007 (c), (d), and (e); 127.019(b); and 127.701 of subparts A and B of this part apply to the marine transfer area for LNG of each inactive existing facility.

(d) Subparts A and C of this part apply to the marine transfer area for LHG of each active waterfront facility handling LHG.

(e) Sections 127.007 (c), (d), and (e); 127.019(b); and 127.1325(c) of subparts A

and C of this part apply to the marine transfer area for LHG of each inactive facility.

[CGD 88–049, 60 FR 39794, Aug. 3, 1995]

§ 127.003 Incorporation by reference.

(a) Certain material is incorporated by reference into this part with the approval of the Director of the Federal Register in accordance with 5 U.S.C. 552(a) and 1 CFR part 51. To enforce any edition other than that specified in paragraph (b) of this section, the Coast Guard must publish notice of change in the FEDERAL REGISTER and make the material available to the public. All approved material is on file at the Office of the Federal Register, Room 700, 800 North Capitol Street NW., Washington, DC 20408, and at the U.S. Coast Guard, (G–MOC), Room 1108, 2100 Second Street SW., Washington, DC 20593–0001, and is available from the sources indicated in paragraph (b) of this section.

(b) The material approved for incorporation by reference in this part, and the sections affected, are:

THE AMERICAN NATIONAL STANDARDS INSTITUTE (ANSI)	
1430 Broadway, New York, NY 10018:	
ANSI B16.5, Pipe Flanges and Flanged Fittings 1988, including 1992 Addenda and Errata	127.1102
ANSI S12.13, Part I, Performance Requirements, Combustible Gas Detectors, 1986	127.1203
AMERICAN PETROLEUM INSTITUTE (API)	
1220 L Street NW., Washington, DC 20005:	
API RP 2003, Protection Against Ignitions Arising Out of Static, Lightning and Stray Currents, 1991	127.1101
AMERICAN SOCIETY OF MECHANICAL ENGINEERS (ASME)	
Three Park Avenue, New York, NY 10016–5990:	
ASME B31.3, Chemical Plant and Petroleum Refinery Piping, 1993	127.1101
AMERICAN SOCIETY FOR TESTING AND MATERIALS (ASTM)	
1916 Race Street, Philadelphia, PA 19103:	
ASTM F–1121, International Shore Connections for Marine Applications, 1987 (reapproved 1993)	127.1511
NATIONAL FIRE PROTECTION ASSOCIATION (NFPA)	
1 Batterymarch Park, Quincy, MA 02269:	
NFPA 10, Portland Fire Extinguishers, 1994	127.603; 127.1503
NFPA 30, Flammable and Combustible Liquids Code, 1993	127.313; 127.1313
NFPA 51B, Fire Prevention in Use of Cutting and Welding Processes, 1994	127.405; 127.1405
NFPA 59A, Production, Storage, and Handling of Liquefied Natural Gas (LNG), 1994	127.101; 127.201; 127.405; 127.603
NFPA 70, National Electrical Code, 1993	127.107; 127.201; 127.1107
NFPA 251, Fire Tests of Building Construction and Materials, 1990	127.005

[CGD 88–049, 60 FR 39794, Aug. 3, 1995; 60 FR 49509, Sept. 26, 1995, as amended by CGD 96–026, 61 FR 33665, June 28, 1996; 61 FR 36629, July 12, 1996; USCG–1999–5832, 64 FR 34714, June 29, 1999]

§ 127.005 Definitions.

As used in this part:

Active means accomplishing the transfer of LHG or LNG, or scheduling one to occur, within 12 months of the current date.

Captain of the Port (COTP) means the Coast Guard officer designated by the Commandant to command a Captain of the Port Zone as described in Part 3 of this chapter, or an authorized representative.

Commandant means the Commandant of the U.S. Coast Guard or an authorized representative.

Control room means a space within the LNG waterfront facility from

which facility operations are controlled.

District Commander means the Coast Guard officer designated by the Commandant to command a Coast Guard District as described in Part 3 of this chapter, or an authorized representative.

Environmentally sensitive areas include public parks and recreation areas, wildlife and waterfowl refuges, fishing grounds, wetlands, other areas deemed to be of high value to fish and wildlife resources, historic sites, and other protected areas.

Existing as applied to a waterfront facility means a facility handling LNG constructed or being constructed under a contract awarded before June 2, 1988, or a facility handling LHG constructed or being constructed under a contract awarded before January 30, 1996.

Facility means either a waterfront facility handling LHG or a waterfront facility handling LNG.

Fire endurance rating means the duration for which an assembly or structural unit will contain a fire or retain structural integrity when exposed to the temperatures specified in the standard time-temperature curve in NFPA 251.

Flammable product means a product indicated by the letter ''F'' or by the letters ''F + T'' in Table 127.005.

Inactive means not active.

Impounding space means a space formed by dikes and floors that confines a spill of LHG or LNG.

LHG means liquefied hazardous gas.

LHG vessel means a vessel constructed or converted to carry LHG, in bulk.

Liquefied hazardous gas (LHG) means a liquid containing one or more of the products listed in Table 127.005.

Liquefied natural gas (LNG) means a liquid or semisolid consisting mostly of methane and small quantities of ethane, propane, nitrogen, or other natural gases.

Liquefied petroleum gas (LPG) means a liquid consisting mostly of propane or butane or both.

LNG means liquefied natural gas.

LNG vessel means a vessel constructed or converted to carry LNG, in bulk.

Loading flange means the connection or group of connections in the cargo transfer pipeline on the facility that connects the facility pipeline to the vessel pipeline.

Marine transfer area for LHG means that part of a waterfront facility handling LHG between the vessel, or where the vessel moors, and the first shutoff valve on the pipeline immediately inland of the terminal manifold or loading arm, including the entire part of a pier or wharf used to serve LHG vessels.

Marine transfer area for LNG means that part of a waterfront facility handling LNG between the vessel, or where the vessel moors, and the last manifold or valve immediately before the receiving tanks.

Mating flange means that flange in the product-transfer pipeline on a waterfront facility handling LHG or a waterfront facility handling LNG that connects this pipeline to the pipeline or transfer hose of the vessel.

MAWP means maximum allowable working pressure.

Maximum allowable working pressure (MAWP) means the maximum gauge pressure permissible at the top of equipment, containers, or pressure vessels while operating at design temperature.

New as applied to a waterfront facility means a facility handling LNG constructed or being constructed under a contract awarded on or after June 2, 1988, or a facility handling LHG constructed or being constructed under a contract awarded on or after January 30, 1996.

Person in charge of transfer operations on the vessel is the person designated the person in charge of cargo transfer under 46 CFR 154.1831.

Release means any spilling, leaking, pumping, pouring, emitting, emptying, discharging, injecting, escaping, leaching, dumping, or disposing into the environment, except a minor release of LHG or its vapor, that may occur during the routine handling of LHG. No release is minor if it creates an atmosphere that exceeds the Lower Flammable Limit (LFL) for a flammable product or any Permissible Exposure Limit (PEL) listed in 29 CFR 1910.1000, Table Z–1 or Z–2, for a toxic product.

Substructure means the deck of a pier or wharf and the structural components below that deck.

Toxic product means a product indicated by the letter ''T'' or by the letters ''F+T'' in Table 127.005.

Waterfront facility handling LHG means any structure on, in, or under the navigable waters of the United States, or any structure on land or any area on shore immediately adjacent to such waters, used or capable of being used to transfer liquefied hazardous gas, in bulk, to or from a vessel.

Waterfront facility handling LNG means any structure on, in, or under the navigable waters of the United States, or any structure on land or any area on shore immediately adjacent to such waters, used or capable of being used to transfer liquefied natural gas, in bulk, to or from a vessel.

TABLE 127.005—LIST OF PRODUCTS AND HAZARDS

Product	Hazard
Acetaldehyde	F+T
Ammonia, anhydrous	T
Butadiene	F
Butanes	F
Butane and propane (mixtures)	F
Butylenes	F
Chlorine	T
Dimethylamine	F+T
Ethane	F
Ethyl chloride	F+T
Ethylene	F
Ethylene oxide	F+T
Methyl-acetylene and propadiene (mixtures)	F
Methyl bromide	F+T
Methyl chloride	F+T
Propane	F
Propylene	F
Sulphur dioxide	T
Vinyl chloride	F+T

Note: ''F'' indicates a flammable product. ''T'' indicates a toxic product. ''F&T'' indicates a product both flammable and toxic.

[CGD 78–038, 53 FR 3376, Feb. 7, 1988, as amended by CGD 88–049, 60 FR 39795, Aug. 3, 1995; CGD 97–023, 62 FR 33363, June 19, 1997]

§ 127.007 Letter of intent.

(a) An owner who intends to build a new facility or the owner or operator who plans new construction on an existing facility, must submit a letter of intent that meets paragraph (d) of this section to the COTP of the zone in which the facility is or will be located, at least 60 days before construction begins.

(b) The owner or operator of an active existing facility shall submit a letter of intent that meets paragraph (d) of this section to the COTP of the zone in which the facility is located.

(c) An owner or operator of an inactive existing facility shall submit a letter of intent that meets paragraph (d) of this section to the COTP of the zone in which the facility is located, at least 60 days before transferring LHG or LNG.

(d) Each letter of intent must contain—

(1) The name, address, and telephone number of the owner and operator;

(2) The name, address, and telephone number of the facility;

(3) The physical location of the facility;

(4) A description of the facility;

(5) The LHG or LNG vessels' characteristics and the frequency of LHG or LNG shipments to or from the facility; and

(6) Charts showing waterway channels and identifying commercial, industrial, environmentally sensitive, and residential areas in and adjacent to the waterway used by the LHG or LNG vessels en route to the facility, within 25 kilometers (15.5 miles) of the facility.

(e) The owner or operator who submits a letter of intent under paragraph (a), (b), or (c), shall notify the COTP in writing within 15 days if—

(1) There is any change in the information submitted under paragraphs (d)(1) through (d)(5) of this section; or

(2) No LHG or LNG transfer operations are scheduled within the next 12 months.

[CGD 78–038, 53 FR 3376, Feb. 7, 1988, as amended by CGD 88–049, 60 FR 39795, Aug. 3, 1995]

§ 127.009 Letter of recommendation.

After the COTP receives the letter of intent under § 127.007 (a) or (c), the COTP issues a letter of recommendation to the owner or operator of the facility and to the state and local government agencies having jurisdiction, as to the suitability of the waterway for LHG or LNG marine traffic, based on the—

(a) Information submitted under §§ 127.007 (d)(3) through (d)(6);

(b) Density and character of marine traffic in the waterway;

(c) Locks, bridges, or other man-made obstructions in the waterway; and

(d) Following factors adjacent to the facility:

(1) Depths of the water.

(2) Tidal range.

(3) Protection from high seas.

(4) Natural hazards, including reefs, rocks, and sandbars.

(5) Underwater pipelines and cables.

(6) Distance of berthed vessel from the channel and the width of the channel.

[CGD 78–038, 53 FR 3376, Feb. 7, 1988, as amended by CGD 88–049, 60 FR 39795, Aug. 3, 1995]

NOTE: The Coast Guard is authorized by law to establish water or waterfront safety zones, or other measures for limited, controlled, or conditional access and activity, when necessary for the protection of any vessel, structure, waters, or shore area.

§ 127.011 Inspections of waterfront facilities.

The operator shall ensure that the COTP or his representative is allowed to make reasonable examinations and inspections to determine whether the facility meets this part.

[CGD 78–038, 53 FR 3376, Feb. 7, 1988, as amended by CGD 88–049, 60 FR 39795, Aug. 3, 1995]

§ 127.013 Suspension of transfer operations.

(a) The COTP may issue an order to the operator to suspend LHG or LNG transfer operations if the COTP finds any condition requiring immediate action to—

(1) Prevent damage to, or the destruction of, any bridge or other structure on or in the navigable waters of the United States, or any land structure or shore area immediately adjacent to such waters; and

(2) Protect the navigable waters and the resources therein from harm resulting from vessel or structure damage, destruction, or loss.

(b) Each order to suspend transfer operations issued under paragraph (a) of this section—

(1) Is effective immediately;

(2) Contains a statement of each condition requiring immediate action; and

(3) Is withdrawn by the COTP whenever each condition is corrected or no longer exists.

[CGD 78–038, 53 FR 3376, Feb. 7, 1988, as amended by CGD 88–049, 60 FR 39795, Aug. 3, 1995]

§ 127.015 Appeals.

(a) Any person directly affected by an action taken under this part may request reconsideration by the Coast Guard officer responsible for that action.

(b) Except as provided under paragraph (e) of this section, any person not satisfied with a ruling made under the procedure contained in paragraph (a) of this section may—

(1) Appeal that ruling in writing to the District Commander of the district in which the action was taken; and

(2) Supply supporting documentation and evidence that the appellant wishes to have considered.

(c) The District Commander issues a ruling after reviewing the appeal submitted under paragraph (b) of this section. Except as provided under paragraph (e) of this section, any person not satisfied with this ruling may—

(1) Appeal that ruling in writing to the Assistant Commandant for Marine Safety and Environmental Protection, U.S. Coast Guard, Washington, DC 20593–0001; and

(2) Supply supporting documentation and evidence that the appellant wishes to have considered.

(d) The Assistant Commandant for Marine Safety and Environmental Protection issues a ruling after reviewing the appeal submitted under paragraph (c) of this section, which is final agency action.

(e) If the delay in presenting a written appeal has an adverse impact on the operations of the appellant, the appeal under paragraph (b) or (c) of this section—

(1) May be presented orally; and

(2) Must be submitted in writing within five days after the oral presentation—

(i) With the basis for the appeal and a summary of the material presented orally; and

(ii) To the same Coast Guard official who heard the oral presentation.

[CGD 78–038, 53 FR 3376, Feb. 7, 1988, as amended by CGD 96–026, 61 FR 33665, June 28, 1996; CGD 97–023, 62 FR 33363, June 19, 1997]

§ 127.017 Alternatives.

(a) The COTP may allow alternative procedures, methods, or equipment standards to be used by an operator instead of any requirements in this part if—

(1) The operator submits a written request for the alternative at least 30 days before facility operations under the alternative would begin, unless the COTP authorizes a shorter time; and

(2) The alternative provides at least the same degree of safety provided by the regulations in this part.

(b) The COTP approves or disapproves any alternative requested under paragraph (a) of this section—

(1) In writing; or

(2) Orally, with subsequent written confirmation.

§ 127.019 Operations Manual and Emergency Manual: Procedures for examination.

(a) The owner or operator of an active existing facility shall submit two copies of the *Operations Manual* and of the *Emergency Manual* to the Captain of the Port of the zone in which the facility is located.

(b) At least 30 days before transferring LHG or LNG, the owner or operator of a new or an inactive existing facility shall submit two copies of the *Operations Manual* and of the *Emergency Manual* to the Captain of the Port of the zone in which the facility is located, unless the manuals have been examined and there have been no changes since that examination.

(c) If the COTP finds that the *Operations Manual* meets § 127.305 or § 127.1305 and that the Emergency Manual meets § 127.307 or § 127.1307, the Captain of the Port returns a copy to the owner or operator marked ''Examined by the Coast Guard''.

(d) If the COTP finds that the *Operations Manual* or the *Emergency Manual* does not meet this part, the Captain of the Port returns the manual with an explanation of why it does not meet this part.

[CGD 78–038, 53 FR 3376, Feb. 7, 1988, as amended by CGD 88–049, 60 FR 39795, Aug. 3, 1995]

Subpart B—Waterfront Facilities Handling Liquefied Natural Gas

§ 127.101 Design and construction: General.

The marine transfer area for LNG must meet the following criteria in NFPA 59A:

(a) Chapter 2, Sections 2–1.2 and 2–3.

(b) Chapter 4, Section 4–1.3.

(c) Chapter 6.

(d) Chapter 7, Sections 7–6 and 7–7.

(e) Chapter 8, except Sections 8–3, 8–5 and 8–7.2.

[CGD 78–038, 53 FR 3376, Feb. 7, 1988, as amended by CGD 88–049, 60 FR 39795, Aug. 3, 1995]

§ 127.103 Piers and wharves.

(a) If the waterfront facility handling LNG is in a region subject to earthquakes, the piers and wharves must be designed to resist earthquake forces.

(b) Substructures, except moorings and breasting dolphins, that support or are within 5 meters (16.4 feet) of any pipe or equipment containing LNG, or are within 15 meters (49.2 feet) of a loading flange, must—

(1) Be made of concrete or steel; and

(2) Have a fire endurance rating of not less than two hours.

(c) LNG or LPG storage tanks must have the minimum volume necessary for—

(1) Surge protection;

(2) Pump suction supply; or

(3) Other process needs.

[CGD 78–038, 53 FR 3376, Feb. 7, 1988, as amended at CGD 88–049, 60 FR 39796, Aug. 3, 1995]

§ 127.105 Layout and spacing of marine transfer area for LNG.

(a) LNG impounding spaces must be located so that the heat flux from a fire over the impounding spaces does not cause structural damage to an LNG vessel moored or berthed at the waterfront facility handling LNG.

(b) Each LNG loading flange must be located at least 300 meters (984.3 feet)

from the following which are primarily intended for the use of the general public or railways:

(1) Each bridge crossing a navigable waterway.

(2) Each entrance to any tunnel under a navigable waterway.

[CGD 78–038, 53 FR 3376, Feb. 7, 1988, as amended by CGD 88–049, 60 FR 39796, Aug. 3, 1995]

§ 127.107 Electrical power systems.

(a) The electrical power system must have a power source and a separate emergency power source, so that failure of one source does not affect the capability of the other source. The system must meet the National Electrical Code, NFPA 70.

(b) The emergency power source must provide enough power for the operation of the—

(1) Emergency shutdown system;

(2) Communications equipment;

(3) Firefighting equipment; and

(4) Emergency lighting.

(c) If an auxiliary generator is used as an emergency power source, it must meet Section 700–12 of NFPA 70.

§ 127.109 Lighting systems.

(a) The marine transfer area for LNG must have a lighting system and separate emergency lighting.

(b) All outdoor lighting must be located or shielded so that it is not confused with any aids to navigation and does not interfere with navigation on the adjacent waterways.

(c) The lighting system must provide an average illumination on a horizontal plane one meter (3.3 feet) above the deck that is—

(1) 54 lux (five foot-candles) at any loading flange; and

(2) 11 lux (one foot-candle) at each work area.

(d) The emergency lighting must provide lighting for the operation of the—

(1) Emergency shutdown system;

(2) Communications equipment; and

(3) Firefighting equipment.

[CGD 78–038, 53 FR 3376, Feb. 7, 1988, as amended by CGD 88–049, 60 FR 39795, Aug. 3, 1995]

§ 127.111 Communications systems.

(a) The marine transfer area for LNG must have a ship-to-shore communication system and a separate emergency ship-to-shore communication system.

(b) Each ship-to-shore communication system must be a dedicated system that allows voice communication between the person in charge of transfer operations on the vessel, the person in charge of shoreside transfer operations, and personnel in the control room.

[CGD 78–038, 53 FR 3376, Feb. 7, 1988, as amended by CGD 88–049, 60 FR 39795, Aug. 3, 1995]

§ 127.113 Warning signs.

(a) The marine transfer area for LNG must have warning signs that—

(1) Meet paragraph (b) of this section;

(2) Can be seen from the shore and the water; and

(3) Have the following text:

Warning
Dangerous Cargo
No Visitors
No Smoking
No Open Lights

(b) Each letter in the words on the sign must be—

(1) Block style;

(2) Black on a white background; and

(3) 7.6 centimeters (3 inches) high.

[CGD 78–038, 53 FR 3376, Feb. 7, 1988, as amended by CGD 88–049, 60 FR 39796, Aug. 3, 1995]

EQUIPMENT

§ 127.201 Sensing and alarm systems.

(a) Fixed sensors must have audio and visual alarms in the control room and audio alarms nearby.

(b) Fixed sensors that continuously monitor for LNG vapors must—

(1) Be in each enclosed area where vapor or gas may accumulate; and

(2) Meet Section 9–4 of NFPA 59A.

(c) Fixed sensors that continuously monitor for flame, heat, or products of combustion must—

(1) Be in each enclosed or covered Class I, Division 1, hazardous location defined in Section 500–5(a) of NFPA 70 and each area in which flammable or combustible material is stored; and

(2) Meet Section 9–4 of NFPA 59A.

§ 127.203 Portable gas detectors.

The marine transfer area for LNG must have at least two portable gas detectors capable of measuring 0–100% of the lower flammable limit of methane.

[CGD 78–038, 53 FR 3376, Feb. 7, 1988, as amended by CGD 88–049, 60 FR 39796, Aug. 3, 1995]

§ 127.205 Emergency shutdown.

Each transfer system must have an emergency shutdown system that—

(a) Can be activated manually; and

(b) Is activated automatically when the fixed sensors under § 127.201(b) measure LNG concentrations exceeding 40% of the lower flammable limit.

§ 127.207 Warning alarms.

(a) The marine transfer area for LNG must have a rotating or flashing amber light with a minimum effective flash intensity, in the horizontal plane, of 5000 candelas. At least 50% of the required effective flash intensity must be maintained in all directions from 1.0 degree above to 1.0 degree below the horizontal plane.

(b) The marine transfer area for LNG must have a siren with a minimum ⅓-octave band sound pressure level at 1 meter of 125 decibels referenced to 0.0002 microbars. The siren must be located so that the sound signal produced is audible over 360 degrees in a horizontal plane.

(c) Each light and siren must be located so that the warning alarm is not obstructed for a distance of 1.6 km (1 mile) in all directions.

[CGD 78–038, 53 FR 3376, Feb. 7, 1988, as amended by CGD 88–049, 60 FR 39796, Aug. 3, 1995]

OPERATIONS

§ 127.301 Persons in charge of shoreside transfer operations: Qualifications and certification.

(a) No person may serve, and the operator of the waterfront facility handling LNG may not use the services of any person, as a person in charge of shoreside transfer operations, unless that person—

(1) Has at least 48 hours of LNG transfer experience;

(2) Knows the hazards of LNG;

(3) Knows the rules of this subpart; and

(4) Knows the procedures in the examined *Operations Manual* and the examined *Emergency Manual.*

(b) Before a person in charge of shoreside transfer operations supervises a transfer, the operator shall certify in writing that the criteria in paragraph (a) of this section are met. The operator shall maintain a copy of each current certification available for inspection at the waterfront facility handling LNG.

[CGD 78–038, 53 FR 3376, Feb. 7, 1988, as amended by CGD 88–049, 60 FR 39796, Aug. 3, 1995]

§ 127.303 Compliance with suspension order.

If an order to suspend is given to the operator or owner of the waterfront facility handling LNG, no LNG transfer operations may be conducted at the facility until the order is withdrawn by the COTP.

[CGD 78–038, 53 FR 3376, Feb. 7, 1988, as amended by CGD 88–049, 60 FR 39796, Aug. 3, 1995]

§ 127.305 Operations Manual.

Each *Operations Manual* must contain—

(a) A description of the transfer system including mooring areas, transfer connections, control rooms, and diagrams of the piping and electrical systems;

(b) The duties of each person assigned for transfer operations;

(c) The maximum relief valve setting or maximum allowable working pressure of the transfer system;

(d) The facility telephone numbers of facility supervisors, persons in charge of shoreside transfer operations, personnel on watch in the marine transfer area for LNG, and security personnel;

(e) A description of the security systems for the marine transfer area for LNG;

(f) The procedures for—

(1) Transfer operations including gauging, cool down, pumping, venting, and shutdown;

(2) Transfer operations start-up and shutdown;

(3) Security violations; and

(4) The communications systems; and

(g) A description of the training programs established under § 127.503.

[CGD 78–038, 53 FR 3376, Feb. 7, 1988, as amended by CGD 88–049, 60 FR 39796, Aug. 3, 1995]

§ 127.307 Emergency Manual.

Each *Emergency Manual* must contain—

(a) LNG release response procedures, including contacting local response organizations;

(b) Emergency shutdown procedures;

(c) A description of the fire equipment and systems and their operating procedures;

(d) A description of the emergency lighting and emergency power systems;

(e) The telephone numbers of local Coast Guard units, hospitals, fire departments, police departments, and other emergency response organizations;

(f) If the waterfront facility handling LNG has personnel shelters, the location of and provisions in each shelter;

(g) First aid procedures and if there are first aid stations, the locations of each station; and

(h) Emergency procedures for mooring and unmooring a vessel.

[CGD 78–038, 53 FR 3376, Feb. 7, 1988, as amended by CGD 88–049, 60 FR 39796, Aug. 3, 1995]

§ 127.309 Operations Manual and Emergency Manual: Use.

The operator shall ensure that—

(a) LNG transfer operations are not conducted unless the waterfront facility handling LNG has an examined *Operations Manual* and examined *Emergency Manual;*

(b) Each transfer operation is conducted in accordance with the examined *Operations Manual;* and

(c) Each emergency response is in accordance with the examined *Emergency Manual.*

[CGD 78–038, 53 FR 3376, Feb. 7, 1988, as amended by CGD 88–049, 60 FR 39796, Aug. 3, 1995]

§ 127.311 Motor vehicles.

(a) The operator shall designate and mark parking spaces that—

(1) Do not block fire lanes;

(2) Do not impede any exits;

(3) Are not located in any impounding space; and

(4) Are not within 15 meters (49.2 feet) of any storage tank or loading flange.

(b) During transfer operations, no person may—

(1) Stop or park a motor vehicle in a space that is not designated a parking space; or

(2) Refuel any motor vehicle.

§ 127.313 Bulk storage.

(a) The operator shall ensure that only the following flammable materials are stored in the marine transfer area for LNG:

(1) LNG.

(2) LPG.

(3) Vessel fuel.

(4) Oily waste from vessels.

(5) Solvents, lubricants, paints, and other fuels in the amount used for one day's operations and maintenance.

(b) Flammable liquids must be stored in accordance with Chapter 4 of NFPA 30.

[CGD 78–038, 53 FR 3376, Feb. 7, 1988, as amended by CGD 88–049, 60 FR 39796, Aug. 3, 1995]

§ 127.315 Preliminary transfer inspection.

Before transferring LNG, the person in charge of shoreside transfer operations shall—

(a) Inspect the transfer piping and equipment to be used during the transfer and replace any worn or inoperable parts;

(b) For each of the vessel's cargo tanks from which cargo will be transferred, note the pressure, temperature, and volume to ensure they are safe for transfer;

(c) Review and agree with the person in charge of cargo transfer on the vessel to—

(1) The sequence of transfer operations;

(2) The transfer rate;

(3) The duties, location, and watches of each person assigned for transfer operations; and

(4) Emergency procedures from the examined *Emergency Manual;*

(d) Ensure that transfer connections allow the vessel to move to the limits of its moorings without placing strain

on the loading arm or transfer piping system;

(e) Ensure that each part of the transfer system is aligned to allow the flow of LNG to the desired location;

(f) Ensure that warning signs that warn that LNG is being transferred, are displayed;

(g) Eliminate all ignition sources in the marine transfer area for LNG;

(h) Ensure that personnel are on duty in accordance with the examined *Operations Manual;* and

(i) Test the following to determine that they are operable:

(1) The sensing and alarm systems.

(2) The emergency shutdown system.

(3) The communication systems.

[CGD 78–038, 53 FR 3376, Feb. 7, 1988, as amended by CGD 88–049, 60 FR 39796, Aug. 3, 1995]

§ 127.317 Declaration of inspection.

(a) After the preliminary transfer inspection under § 127.315 has been satisfactorily completed, the person in charge of shoreside transfer operations shall ensure that no person transfers LNG until a Declaration of Inspection that meets paragraph (c) of this section is executed and signed in duplicate.

(b) The person in charge of shoreside transfer operations shall give one signed copy of the Declaration of Inspection to the person in charge of transfer operations on the vessel, and shall retain one signed copy at the waterfront facility handling LNG for 30 days after completion of the transfer.

(c) Each Declaration of Inspection must contain—

(1) The name of the vessel and the waterfront facility handling LNG;

(2) The date and time that transfer operations begin;

(3) A list of the requirements in § 127.315 with the initials of the person in charge of shoreside transfer operations after each requirement, indicating that the requirement is met;

(4) The signature of the person in charge of shoreside transfer operations and the date and time of signing, indicating that he or she is ready to begin transfer operations; and

(5) The signature of each relief person in charge and the date and time of each relief.

[CGD 78–038, 53 FR 3376, Feb. 7, 1988, as amended by CGD 88–049, 60 FR 39796, Aug. 3, 1995]

§ 127.319 LNG transfer.

During LNG transfer operations, the following must be met:

(a) The operator of the waterfront facility handling LNG shall ensure that—

(1) The marine transfer area for LNG is under the supervision of a person in charge, who has no other assigned duties during the transfer operation;

(2) Personnel transferring fuel or oily waste are not involved in LNG transfer; and

(3) No vessels are moored outboard of any LNG vessel without the permission of the COTP.

(b) The person in charge of shoreside transfer operations shall—

(1) Be in continuous communication with the person in charge of transfer operations on the vessel;

(2) Ensure that an inspection of the transfer piping and equipment for leaks, frost, defects, and other symptoms of safety and operational problems is conducted at least once every transfer;

(3) Ensure that transfer operations are discontinued—

(i) Before electrical storms or uncontrolled fires are adjacent to the marine transfer area for LNG; and

(ii) As soon as a fire is detected; and

(4) Ensure that the lighting systems are turned on between sunset and sunrise.

NOTE: Vessel transfer requirements are published in 46 CFR Part 154.

[CGD 78–038, 53 FR 3376, Feb. 7, 1988, as amended by CGD 88–049, 60 FR 39796, Aug. 3, 1995]

§ 127.321 Release of LNG.

(a) The operator of the waterfront facility handling LNG shall ensure that—

(1) No person releases LNG into the navigable waters of the United States; and

(2) If there is a release of LNG, vessels near the facility are notified of the release by the activation of the warning alarm.

(b) If there is a release of LNG, the person in charge of shoreside transfer operations shall—

(1) Immediately notify the person in charge of cargo transfer on the vessel of the intent to shutdown;

(2) Shutdown transfer operations;

(3) Notify the COTP of the release; and

(4) Not resume transfer operations until authorized by the COTP.

[CGD 78–038, 53 FR 3376, Feb. 7, 1988, as amended by CGD 88–049, 60 FR 39796, Aug. 3, 1995]

MAINTENANCE

§ 127.401 Maintenance: General.

The operator of the waterfront facility handling LNG shall ensure that the equipment required under this part is maintained in a safe condition so that it does not cause a release or ignition of LNG.

[CGD 78–038, 53 FR 3376, Feb. 7, 1988, as amended by CGD 88–049, 60 FR 39796, Aug. 3, 1995]

§ 127.403 Inspections.

The operator shall conduct a visual inspection for defects of each pressure-relief device not capable of being tested, at least once each calendar year, with intervals between inspections not exceeding 15 months, and make all repairs in accordance with § 127.405.

§ 127.405 Repairs.

The operator shall ensure that—

(a) Equipment repairs are made so that—

(1) The equipment continues to meet the applicable requirements in this subpart and in NFPA 59A; and

(2) Safety is not compromised; and

(b) Welding is done in accordance with NFPA 51B and NFPA 59A, Chapter 6, Section 6–3.4.

[CGD 78–038, 53 FR 3376, Feb. 7, 1988, as amended by CGD 88–049, 60 FR 39796, Aug. 3, 1995]

§ 127.407 Testing.

(a) The operator shall pressure test under paragraph (b) of this section the transfer system, including piping, hoses, and loading arms, and verify the set pressure of the safety and relief valves—

(1) After the system or the valves are altered;

(2) After the system or the valves are repaired;

(3) After any increase in the MAWP; or

(4) For those components that are not continuously kept at cryogenic temperature, at least once each calendar year, with intervals between testing not exceeding 15 months.

(b) The pressure for the transfer system test under paragraph (a) of this section must be at 1.1 times the MAWP and be held for a minimum of 30 minutes.

§ 127.409 Records.

(a) The operator shall keep on file the following information:

(1) A description of the components tested under § 127.407.

(2) The date and results of the test under § 127.407.

(3) A description of any corrective action taken after the test.

(b) The information required by this section must be retained for 24 months.

PERSONNEL TRAINING

§ 127.501 Applicability.

The training required by this subpart must be completed before LNG is transferred.

§ 127.503 Training: General.

The operator shall ensure that each of the following is met:

(a) All full-time employees have training in the following subjects:

(1) Basic LNG firefighting procedures.

(2) LNG properties and hazards.

(b) In addition to the training under paragraph (a) of this section, each person assigned for transfer operations has training in the following subjects:

(1) The examined *Operations Manual* and examined *Emergency Manual.*

(2) Advanced LNG firefighting procedures.

(3) Security violations.

(4) LNG vessel design and cargo transfer operations.

(5) LNG release response procedures.

(6) First aid procedures for—

(i) Frostbite;

(ii) Burns;

(iii) Cardio-pulminary resuscitation; and

(iv) Transporting injured personnel.

(c) The personnel who received training under paragraphs (a) and (b) of this section receive refresher training in the same subjects at least once every five years.

FIREFIGHTING

§ 127.601 Fire equipment: General.

(a) Fire equipment and systems provided in addition to the requirements in this subpart must meet the requirements of this subpart.

(b) The following must be red or some other conspicuous color and be in locations that are readily accessible:

(1) Hydrants and standpipes.

(2) Hose stations.

(3) Portable fire extinguishers.

(4) Fire monitors.

(c) Fire equipment, if applicable, must bear the approval of Underwriters Laboratories, Inc., the Factory Mutual Research Corp., or the Coast Guard.

§ 127.603 Portable fire extinguishers.

Each marine transfer area for LNG must have—

(a) Portable fire extinguishers that meet 9–6.1 of NFPA 59A and Chapter 3 of NFPA 10; and

(b) At least one portable fire extinguisher in each designated parking area.

[CGD 78–038, 53 FR 3376, Feb. 7, 1988, as amended by CGD 88–049, 60 FR 39796, Aug. 3, 1995]

§ 127.605 Emergency outfits.

(a) There must be an emergency outfit for each person whose duties include fighting fires, but there must be at least two emergency outfits. Each emergency outfit must include—

(1) One explosion-proof flashlight;

(2) Boots and gloves of rubber or other electrically nonconducting material;

(3) A rigid helmet that protects the head against impact;

(4) Water resistant clothing that also protects the body against fire; and

(5) U.S. Bureau of Mines approved self-contained breathing apparatus.

(b) Emergency outfits under paragraph (a) of this section must be in locations that are readily accessible and marked for easy recognition.

§ 127.607 Fire main systems.

(a) Each marine transfer area for LNG must have a fire main system that provides at least two water streams to each part of the LNG transfer piping and connections, one of which must be from a single length of hose or from a fire monitor.

(b) The fire main must have at least one isolation valve at each branch connection and at least one isolation valve downstream of each branch connection to isolate damaged sections.

(c) The fire main system must have the capacity to supply—

(1) Simultaneously all fire hydrants, standpipes, and fire monitors in the system; and

(2) At a Pitot tube pressure of 618 kilonewtons per square meter (75 p.s.i.), the two outlets having the greatest pressure drop between the source of water and the hose or monitor nozzle, when only those two outlets are open.

(d) If the source of water for the fire main system is capable of supplying a pressure greater than the system's design working pressure, the system must have at least one pressure relief device.

(e) Each fire hydrant or standpipe must have at least one length of hose of sufficient length to meet paragraph (a) of this section.

(f) Each length of hose must—

(1) Be 1½ inches or more in diameter and 30.5 meters (100 feet) or less in length;

(2) Be on a hose rack or reel;

(3) Be connected to the hydrant or standpipe at all times; and

(4) Have a Coast Guard approved combination solid stream and water spray fire hose nozzle.

[CGD 78–038, 53 FR 3376, Feb. 7, 1988, as amended at CGD 88–049, 60 FR 39796, Aug. 3, 1995]

§ 127.609 Dry chemical systems.

(a) Each marine transfer area for LNG must have a dry chemical system that provides at least two dry chemical

discharges to the area surrounding the loading arms, one of which must be—

(1) From a monitor; and

(2) Actuated and, except for pre-aimed monitors, controlled from a location other than the monitor location.

(b) The dry chemical system must have the capacity to supply simultaneously or sequentially each hose or monitor in the system for 45 seconds.

(c) Each dry chemical hose station must have at least one length of hose that—

(1) Is on a hose rack or reel; and

(2) Has a nozzle with a valve that starts and stops the flow of dry chemical.

[CGD 78–038, 53 FR 3376, Feb. 7, 1988, as amended at CGD 88–049, 60 FR 39796, Aug. 3, 1995]

§ 127.611 International shore connection.

The marine transfer area for LNG must have an international shore connection that is in accordance with ASTM F–1121, a 2½ inch fire hydrant, and 2½ inch fire hose of sufficient length to connect the fire hydrant to the international shore connection on the vessel.

[CGD 88–032, 56 FR 35819, July 29, 1991, as amended by CGD 88–049, 60 FR 39796, Aug. 3, 1995]

§ 127.613 Smoking.

In the marine transfer area for LNG, the operator shall ensure that no person smokes when there is LNG present.

[CGD 78–038, 53 FR 3376, Feb. 7, 1988, as amended at CGD 88–049, 60 FR 39796, Aug. 3, 1995]

§ 127.615 Fires.

In the marine transfer area for LNG, the operator shall ensure that there are no fires when there is LNG present.

[CGD 78–038, 53 FR 3376, Feb. 7, 1988, as amended at CGD 88–049, 60 FR 39796, Aug. 3, 1995]

§ 127.617 Hotwork.

The operator shall ensure that no person conducts welding, torch cutting, or other hotwork unless that person has a permit from the COTP.

SECURITY

§ 127.701 Security on existing facilities.

The operator shall ensure that any security procedure and arrangement on existing facilities, that were in use when LNG transfer operations were last conducted, be continued and maintained, or upgraded, whenever LNG transfer operations are conducted.

§ 127.703 Access to the marine transfer area for LNG.

The operator shall ensure that—

(a) Access to the marine transfer area for LNG from the shoreside and the waterside is limited to—

(1) Personnel who work at the waterfront facility handling LNG including persons assigned for transfer operations, vessel personnel, and delivery and service personnel in the course of their business;

(2) Coast Guard personnel; and

(3) Other persons authorized by the operator; and

(b) No person is allowed into the marine transfer area for LNG unless that person is identified by a waterfront facility handling LNG-issued identification card or other identification card displaying his or her photograph, or is an escorted visitor displaying an identifying badge.

[CGD 78–038, 53 FR 3376, Feb. 7, 1988, as amended by CGD 88–049, 60 FR 39796, Aug. 3, 1995]

§ 127.705 Security systems.

The operator shall ensure that security patrols of the marine transfer area for LNG are conducted once every hour, or that a manned television monitoring system is used, to detect—

(a) Unauthorized personnel;

(b) Fires; and

(c) LNG releases.

[CGD 78–038, 53 FR 3376, Feb. 7, 1988, as amended by CGD 88–049, 60 FR 39796, Aug. 3, 1995]

§ 127.707 Security personnel.

The operator shall ensure that no person is assigned security patrol duty unless that person has been instructed on security violation procedures.

§ 127.709 Protective enclosures.

The following must be within a fence or wall that prevents trespassing:

(a) Impounding spaces.

(b) Control rooms and stations.

(c) Electrical power sources.

§ 127.711 Communications.

The marine transfer area for LNG must have a means of direct communications between the security patrol and other operating or security personnel on duty on the waterfront facility handling LNG.

[CGD 78–038, 53 FR 3376, Feb. 7, 1988, as amended by CGD 88–049, 60 FR 39796, Aug. 3, 1995]

Subpart C—Waterfront Facilities Handling Liquefied Hazardous Gas

SOURCE: CGD 88–049, 60 FR 39796, Aug. 3, 1995, unless otherwise noted.

DESIGN AND CONSTRUCTION

§ 127.1101 Piping systems.

Each piping system within the marine transfer area for LHG used for the transfer of LHG must meet the following criteria:

(a) Each system must be designed and constructed in accordance with ASME B31.3.

(b) Each pipeline on a pier or wharf must be located so that it is not exposed to physical damage from vehicular traffic or cargo-handling equipment. Each pipeline under navigable waters must be covered or protected to meet 49 CFR 195.248.

(c) The transfer manifold of each liquid transfer line and of each vapor return line must have an isolation valve with a bleed connection, such that transfer hoses and loading arms can be blocked off, drained or pumped out, and depressurized before disconnecting. Bleeds or vents must discharge to a safe area such as a tank or flare.

(d) In addition to the isolation valve at the transfer manifold, each liquid-transfer line and each vapor return line must have a readily accessible isolation valve located near the edge of the marine transfer area for LHG.

(e) Each power-operated isolation valve must be timed to close so that it will not produce a hydraulic shock capable of causing failure of the line or equipment. Unless the layout of the piping allows the isolation valve at the transfer manifold to close within 30 seconds without creating excessive stresses on the system, the layout must be reconfigured to reduce the stresses to a safe level.

(f) Each waterfront facility handling LHG that transfers to or from a vessel requiring vapor return during transfer must be equipped with a vapor return line designed to attach to the vessel's vapor connection.

(g) Where two or more LHGs are loaded or unloaded at the same facility, each manifold must be identified or marked to indicate each LHG it handles.

(h) Each pipeline used to transfer flammable liquids or vapors must be provided with precautions against static, lightning, and stray current in accordance with API RP 2003.

§ 127.1102 Transfer hoses and loading arms.

(a) Each hose within the marine transfer area for LHG used for the transfer of LHG or its vapors to or from a vessel must—

(1) Be made of materials resistant to each LHG transferred, in both the liquid and vapor state (if wire braid is used for reinforcement, the wire must be of corrosion-resistant material, such as stainless steel);

(2) Be constructed to withstand the temperature and pressure foreseeable during transfer, with a MAWP not less than the maximum pressure to which it may be subjected and at least 1030 kPa gauge (149.4 psig);

(3) Be designed for a minimum bursting pressure of a least five times the MAWP;

(4) Have—

(i) Full-threaded connections;

(ii) Flanges that meet ANSI B16.5; or

(iii) Quick connect couplings that are acceptable to the Commandant;

(5) Be adequately supported against the weight of its constituent parts, the LHG, and any ice formed on it;

(6) Have no kinks, bulges, soft spots, or other defects that will let it leak or burst under normal working pressure; and

(7) Have a permanently attached nameplate that indicates, or otherwise be permanently marked to indicate—

(i) Each LHG for which it is suitable;

(ii) Its MAWP at the corresponding service temperature; and

(iii) If used for service at other than ambient temperature, its minimum service temperature.

(b) Each loading arm used for the transfer of LHG or its vapor must—

(1) Be made of materials resistant to each LHG transferred, in both the liquid and vapor state;

(2) Be constructed to withstand the temperature and pressure foreseeable during transfer;

(3) Be adequately supported against the weight of its constituent parts, the LHG, and any ice formed on it;

(4) Be provided with an alarm to indicate when it is approaching the limits of its extension, unless the examined Operations Manual requires a person to perform the same function; and

(5) Have a permanently attached nameplate that indicates, or otherwise be permanently marked to indicate—

(i) Each LHG it may handle;

(ii) Its MAWP at the corresponding service temperature; and,

(iii) If it is used for service at other than ambient temperature, its minimum service temperature.

§127.1103 Piers and wharves.

(a) Each new waterfront facility handling LHG, and all new construction in the marine transfer area for LHG of each existing facility, must comply with the standards for seismic design and construction in 49 CFR part 41.

(b) Each substructure on a new waterfront facility handling LHG, and all new construction in the marine transfer area for LHG of each existing facility, except moorings and breasting dolphins, that supports or is within 4.5 meters (14.8 feet) of any pipe or equipment containing a flammable LHG, or that is within 15 meters (49.2 feet) of a loading flange used to transfer a flammable LHG, must have a fire-endurance rating of not less than two hours.

§127.1105 Layout and spacing of marine transfer area for LHG.

Each new waterfront facility handling LHG, and all new construction in the marine transfer area for LHG of each existing facility, must comply with the following:

(a) Each building, shed, and other structure within each marine transfer area for LHG must be located, constructed, or ventilated to prevent the accumulation of flammable or toxic gases within the structure.

(b) Each impounding space for flammable LHGs located within the area must be designed and located so that the heat flux from a fire over the impounding space does not cause, to a vessel, damage that could prevent the vessel's movement.

(c) Each manifold, loading arm, or independent mating flange must be located at least 60 meters (197 feet) from each of the following structures, if that structure is intended primarily for the use of the general public or of railways:

(1) A bridge crossing a navigable waterway.

(2) The entrance to, or the superstructure of, a tunnel under a navigable waterway.

(d) Each manifold, loading arm, or independent mating flange must be located at least 30 meters (98.5 feet) from each public roadway or railway.

§127.1107 Electrical systems.

Electrical equipment and wiring must be of the kind specified by, and must be installed in accordance with, NFPA 70.

§127.1109 Lighting systems.

(a) Each waterfront facility handling LHG, at which transfers of LHG take place between sunset and sunrise, must have outdoor lighting that illuminates the marine transfer area for LHG.

(b) All outdoor lighting must be located or shielded so that it cannot be mistaken for any aids to navigation and does not interfere with navigation on the adjacent waterways.

(c) The outdoor lighting must provide a minimum average illumination on a horizontal plane 1 meter (3.3 feet) above the walking surface of the marine transfer area that is—

(1) 54 lux (5 foot-candles) at any loading flange; and

(2) 11 lux (1 foot-candle) for the remainder of the marine transfer area for LHG.

§ 127.1111 Communication systems.

(a) The marine transfer area for LHG must possess a communication system that enables continuous two way voice communication between the person in charge of transfer aboard the vessel and the person in charge of transfer for the facility.

(b) The communication system required by paragraph (a) of this section may consist either of fixed or portable telephones or of portable radios. The system must be usable and effective in all phases of the transfer and all weather at the facility.

(c) Devices used to comply with paragraph (a) of this section during the transfer of a flammable LHG must be listed as intrinsically safe by Underwriters Laboratories, Inc., Factory Mutual Research Corporation, or other independent laboratory recognized by NFPA, for use in the hazardous location in which it is used.

§ 127.1113 Warning signs.

(a) The marine transfer area for LHG must have warning signs that—

(1) Meet paragraph (b) of this section;

(2) Can be seen from the shore and the water; and,

(3) Except as provided in paragraph (c) of this section, bear the following text:

Warning
Dangerous Cargo
No visitors
No Smoking
No Open Lights

(b) Each letter on the sign must be—

(1) In block style;

(2) Black on a white background; and

(3) At least 7.6 centimeters (3 inches) high.

(c) The words ''No Smoking'' and ''No Open Lights'' may be omitted when the product being transferred is not flammable.

EQUIPMENT

§ 127.1203 Gas detection.

(a) Each waterfront facility handling LHG that transfers a flammable LHG must have at least two portable gas detectors, or a fixed gas detector, in the marine transfer area for LHG. Each detector must be capable of indicating whether the concentration of flammable vapors exceeds 30% of the Lower Flammable Limit for each flammable product being transferred and must meet ANSI S12.13, Part I.

(b) Each waterfront facility handling LHG that transfers a toxic LHG, other than anhydrous ammonia, must have at least two portable gas detectors, or a fixed gas detector, available in the area. The detectors must be capable of showing whether the concentration of each toxic LHG being transferred is above, at, or below any Permissible Exposure Limit listed in 29 CFR 1910.1000, Table Z–1 or Z–2.

(c) Each gas detector required by paragraph (a) or (b) of this section must serve to detect leaks, check structures for gas accumulations, and indicate workers' exposure to toxic gases in the area.

[CGD 88–049, 60 FR 39797, Aug. 3, 1995; 60 FR 49509, Sept. 26, 1995]

§ 127.1205 Emergency shutdown.

(a) Each piping system used to transfer LHG or its vapors to or from a vessel must have a quick-closing shutoff valve to stop the flow of liquid and vapor from the waterfront facility handling LHG if a transfer hose or loading arm fails. This valve may be the isolation valve with a bleed connection required by § 127.1101(c).

(b) The valve required by paragraph (a) of this section must be located as near as practicable to the terminal manifold or loading-arm connection and must—

(1) Close on loss of power;

(2) Close from the time of activation in 30 seconds or less;

(3) Be capable of local manual closing and remotely controlled closing; and,

(4) If the piping system is used to transfer a flammable LHG, either have fusible elements that melt at less than 105 °C (221 °F) and activate the emergency shutdown, or have a sensor that performs the same function.

(c) A remote actuator for each valve must be located in a place accessible in an emergency, at least 15 meters (49.2 feet) from the terminal manifold or loading arm, and conspicuously marked with its designated function. When activated, the actuator must also automatically shut down any terminal

pumps or compressors used to transfer LHG, or its vapors, to or from the vessel.

[CGD 88–049, 60 FR 39797, Aug. 3, 1995; 60 FR 49509, Sept. 26, 1995]

§127.1207 Warning alarms.

(a) Each marine transfer area for LHG must have a rotating or flashing amber light that is visible for at least 1,600 meters (1 mile) from the transfer connection in all directions.

(b) Each marine transfer area for LHG must also have a siren that is audible for at least 1,600 meters (1 mile) from the transfer connection in all directions.

(c) Each light and siren required by this section must be located so as to minimize obstructions. If any obstruction will prevent any of these alarms from meeting paragraph (a) or (b) of this section, the operator of the waterfront facility handling LHG shall propose for approval by the local COTP additional or alternative warning devices that provide an equivalent level of safety.

[CGD 88–049, 60 FR 39798, Aug. 3, 1995; 60 FR 49509, Sept. 26, 1995]

§127.1209 Respiratory protection.

Each waterfront facility handling LHG must provide equipment for respiratory protection for each employee of the facility in the marine transfer area for LHG during the transfer of one or more of the following toxic LHGs; anhydrous ammonia, chlorine, dimethylamine, ethylene oxide, methyl bromide, sulphur dioxide, or vinyl chloride. The equipment must protect the wearer from the LHG's vapor for at least 5 minutes.

OPERATIONS

§127.1301 Persons in charge of transfers for the facility: Qualifications and certification.

(a) No person may serve, or use the services of any person, as a person in charge of transfers for the facility regulated under this subpart, unless that person—

(1) Has at least 48 hours' transfer experience with each LHG being transferred;

(2) Knows the hazards of each LHG being transferred;

(3) Knows the rules of this subpart; and

(4) Knows the procedures in the examined Operations Manual and the examined Emergency Manual.

(b) Before a person in charge of transfers for a waterfront facility handling LHG supervises a transfer of LHG, the operator of the facility shall certify in writing that that person has met the requirements in paragraph (a) of this section. The operator shall ensure that a copy of each current certification is available for inspection at the facility.

[CGD 88–049, 60 FR 39798, Aug. 3, 1995; 60 FR 49509, Sept. 26, 1995]

§127.1302 Training.

(a) Each operator of a waterfront facility handling LHG shall ensure that each person assigned to act as a person in charge of transfers for the facility has training in the following subjects:

(1) Properties and hazards of each LHG being transferred to or from the facility.

(2) Use of the gas detectors required by §127.1203.

(3) Use of the equipment for respiratory protection required by §127.1209.

(4) Basic firefighting procedures, including the use of the portable fire extinguishers required by §127.1503.

(5) Content and use of the examined Operations Manual and examined Emergency Manual.

(6) The configuration and limitations of cargo systems of LHG vessels.

(7) Procedures for transferring LHG to and from LHG vessels.

(8) Procedures for response to a release of the LHG handled by the facility.

(9) First aid for persons—

(i) With burns;

(ii) Needing cardio-pulmonary resuscitation;

(iii) Exposed to toxic liquid or toxic vapors (if a toxic LHG is handled by the facility); and

(iv) Needing transport to a medical facility.

(10) Restrictions on access to the marine transfer area for LHG.

(b) Each person that receives training under paragraph (a) of this section

shall receive refresher training in the same subjects at least once every 5 years.

(c) The operator shall maintain, for each person trained, a record of all training provided under paragraphs (a) and (b) of this section. The operator shall retain these records for the duration of the person's employment on the waterfront facility plus 12 months.

(d) Training conducted to comply with the hazard communication programs required by the Occupational Safety and Health Administration (OSHA) of the Department of Labor [29 CFR 1910.120] or the Environmental Protection Agency (EPA) [40 CFR 311.1] may be used to satisfy the requirements in paragraph (a) of this section, so far as the training addresses the requirements in paragraph (a) of this section.

§ 127.1303 Compliance with suspension order.

If the COTP issues to the owner or operator of a waterfront facility handling LHG an order to suspend a transfer, no transfer may take place at the facility until the COTP withdraws the order.

§ 127.1305 Operations Manual.

Each Operations Manual must contain—

(a) A description of each liquid-transfer system and vapor transfer system, including each mooring area, transfer connection, and (where installed) control room, and a diagram of the piping and electrical systems;

(b) The duties of each person assigned to transfers;

(c) The maximum relief-valve setting or MAWP of the transfer system;

(d) The telephone numbers of supervisors, persons in charge of transfers for the facility, persons on watch in the marine transfer area for LHG, and security personnel of the facility;

(e) A description for each security system provided for the transfer area;

(f) A description of the training programs established under § 127.1302;

(g) The procedures to follow for security violations; and

(h) For each LHG handled, the procedures for transfer that include—

(1) Requirements for each aspect of the transfer (start-up, gauging, cooldown, pumping, venting, and shutdown);

(2) The maximum transfer rate;

(3) The minimum transfer temperature;

(4) Requirements for firefighting equipment; and

(5) Communication procedures.

§ 127.1307 Emergency Manual.

(a) Each Emergency Manual must contain—

(1) For each LHG handled—

(i) A physical description of the LHG;

(ii) A description of the hazards of the LHG;

(iii) First-aid procedures for persons exposed to the LHG or its vapors;

(iv) The procedures for response to a release of the LHG; and,

(v) If the LHG is flammable, the procedures for fighting a fire involving the LHG or its vapors;

(2) A description of the emergency shutdown required by § 127.1205;

(3) The procedures for emergency shutdown;

(4) A description of the number, kind, place, and use of the fire equipment required by § 127.1501(a) and of the portable fire extinguishers required by § 127.1503;

(5) The telephone numbers of local Coast Guard units, hospitals, fire departments, police departments, and other emergency-response organizations;

(6) If the facility has personnel shelters, the place of and provisions in each shelter;

(7) If the facility has first-aid stations, the location of each station;

(8) Emergency procedures for mooring and unmooring a vessel; and,

(9) If an off-site organization is to furnish emergency response, a copy of the written agreement required by § 127.1505(a)(2).

(b) The employee-emergency plan and fire-prevention plan required by OSHA in 29 CFR 1910.38 may be used to comply with this section to the extent that they address the requirements specified in paragraphs (a) (1) through (9) of this section.

[CGD 88–049, 60 FR 39799, Aug. 3, 1995; 60 FR 49509, Sept. 26, 1995]

§127.1309 Operations Manual and Emergency Manual: Use.

Each operator of a waterfront facility handling LHG shall ensure that—

(a) No transfer is conducted unless the facility has an examined Operations Manual and an examined Emergency Manual;

(b) Each transfer is conducted in accordance with the examined Operations Manual; and

(c) Each emergency response is conducted in accordance with the examined Emergency Manual.

§127.1311 Motor vehicles.

(a) When LHG is being transferred or stored in the marine transfer area of a waterfront facility handling LHG, the operator shall ensure that no person—

(1) Stops or parks a motor vehicle in a space other than a designated parking space;

(2) Refuels a motor vehicle within the area; or

(3) Operates a vehicle or other mobile equipment that constitutes a potential source of ignition within 15 meters (49.2 feet) of any storage container, manifold, loading arm, or independent mating flange containing a flammable liquid or vapor.

(b) If motor vehicles are permitted to stop in the marine transfer area for LHG, the operator shall designate and mark parking spaces that—

(1) Do not block fire lanes;

(2) Do not impede any entrances or exits; and

(3) Are not located within 15 meters (49.2 feet) of any storage container, manifold, loading arm, or independent mating flange containing a flammable liquid or vapor.

§127.1313 Storage of hazardous materials.

(a) Each operator of a waterfront facility handling LHG shall ensure that no materials listed in the table of hazardous materials under 49 CFR 172.101, except for the following, are stored in the marine transfer area for LHG:

(1) The LHG being transferred.

(2) Fuel required by the vessel, or by emergency equipment in the area.

(3) Oily wastes received from vessels.

(4) Solvents, lubricants, paints and similar materials in the amount required for one day's operations and maintenance.

(b) The operator shall ensure that flammable liquids not stored in bulk are stored in accordance with Chapter 4 of NFPA 30.

§127.1315 Preliminary transfer inspection.

Before each transfer, the person in charge of transfer for the facility shall—

(a) Inspect piping and equipment within the marine transfer area for LHG to be used for transfer and ensure that it meets the requirements in this part;

(b) Determine the contents, pressure, temperature, and capacity of each storage tank to or from which LHG will be transferred, to ensure that it is safe for transfer;

(c) Confer with the person in charge of transfer aboard the vessel, to review and agree on—

(1) The sequence of acts required for transfer;

(2) The rate, maximum working pressure, and minimum working temperature of transfer;

(3) The duties, stations, and watches of each person assigned for transfer; and

(4) The emergency procedures in the examined Emergency Manual;

(d) Ensure that the vessel is securely moored and that the transfer connections allow it to move to the limits of its moorings without placing a strain on the piping, hose, or loading arm used for transfer;

(e) Ensure that each part of the transfer system is aligned to allow the flow of LHG to the desired place;

(f) Ensure the display of the warning signs required by §127.1113;

(g) Ensure that the requirements of this part concerning smoking and fire protection are met;

(h) Ensure that qualified personnel are on duty in accordance with the examined Operations Manual and §§127.1301 and 127.1302; and

(i) Test the following to determine that they are operable:

(1) The communication system required by §127.1111.

(2) The gas detectors required by §127.1203.

§ 127.1317 Declaration of Inspection.

(a) Each person in charge of transfer for the facility shall ensure that no person transfers LHG to or from a vessel until a Declaration of Inspection that meets paragraph (c) of this section is executed and signed by both the person in charge aboard the vessel and the person in charge for the facility.

(b) No person in charge of transfer for the facility may sign the Declaration unless that person has fulfilled the requirements of § 127.1315 and has indicated fulfillment of each requirement by writing his or her initials in the appropriate space on the Declaration.

(c) Each Declaration must contain—

(1) The name of the vessel and that of the facility;

(2) The date and time that the transfer begins;

(3) A list of the requirements in § 127.1315 with the initials of both the person in charge aboard the vessel and the person in charge for the facility after each requirement, indicating the fulfillment of the requirement;

(4) The signatures of both the person in charge aboard the vessel and the person in charge for the facility, and the date and time of signing, indicating that they are both ready to begin transfer; and

(5) The signature of each relief person in charge and the date and time of each relief.

(d) The person in charge of transfer for the facility shall give one signed copy of the Declaration to the person in charge of transfer aboard the vessel and retain the other.

(e) Each operator of a facility shall retain a signed copy of the Declaration at the facility for 30 days after the transfer.

§ 127.1319 Transfer of LHG.

(a) The operator of a waterfront facility handling LHG shall notify the COTP of the time and place of each transfer of LHG in bulk at least 4 hours before it begins.

(b) During transfer, each operator of a waterfront facility handling LHG shall ensure that—

(1) The marine transfer area for LHG is under the supervision of a person in charge certified for transfers of LHG, who has no other assigned duties during the transfer;

(2) The person in charge supervises transfers only to or from one vessel at a time unless authorized by the COTP.

(3) No person transferring fuel or oily waste is involved in the transfer; and

(4) No vessel is moored outboard of any LHG vessel unless allowed by the COTP or the examined Operations Manual of the facility.

(c) During transfer, each person in charge of transfer for the facility shall—

(1) Maintain communication with the person in charge of transfer aboard the LHG vessel;

(2) Ensure that an inspection of the transfer piping and equipment for leaks, frost, defects, and other threats to safety takes place at least once every transfer;

(3) Ensure that—

(i) Transfer of LHG is discontinued as soon as a release or fire is detected in the area or aboard the vessel; and

(ii) Transfer of flammable LHG is discontinued when electrical storms or uncontrolled fires approach near the area; and

(4) Ensure that the outdoor lighting required by § 127.1109 is turned on between sunset and sunrise.

(d) Upon completion of transfer of LHG, each operator of a waterfront facility handling LHG shall ensure that hoses and loading arms used for transfer are drained of LHG residue and depressurized before disconnecting from the vessel.

NOTE TO § 127.1319: Corresponding standards for vessels appear at 46 CFR part 154.

§ 127.1321 Release of LHG.

(a) Each operator of a waterfront facility handling LHG shall ensure that—

(1) No person intentionally releases LHG into the environment; and

(2) If a release of LHG or its vapor threatens vessels or persons outside the marine transfer area for LHG, they are notified by the warning devices.

(b) If LHG or its vapor is released, the person in charge of transfer for the facility shall—

(1) Immediately notify the person in charge of transfer aboard the vessel that transfer must be shut down;

(2) Shut down transfer in coordination with the person aboard the vessel;

(3) Notify the COTP of the release; and

(4) Not resume transfer until authorized by the COTP.

§127.1325 Access to marine transfer area for LHG.

Each operator of a waterfront facility handling LHG shall ensure that—

(a) Access to the marine transfer area for LHG from shoreside and waterside is limited to—

(1) Personnel who work in the area, transfer personnel, vessel personnel, and delivery and service personnel in the course of their business;

(2) Federal, State, and local officials; and

(3) Other persons authorized by the operator;

(b) Each person allowed into the area is positively identified as someone authorized to enter and that each person other than an employee of the facility displays an identifying badge;

(c) Guards are stationed, and fences or other devices are installed, to prevent, detect, and respond to unauthorized access, fires, and releases of LHG in the area, except that alternative measures approved by the COTP (such as electronic monitoring or random patrols) will be sufficient where the stationing of guards is impracticable; and

(d) Coast Guard personnel are allowed access to the facility, at any time, to make any examination or to board any vessel moored at the facility.

MAINTENANCE

§127.1401 General.

Each operator of a waterfront facility handling LHG shall ensure that all cargo handling equipment is operable, and that no equipment that may cause the release or ignition of LHG is used in the marine transfer area for LHG.

§127.1403 Inspections.

(a) Each operator of a waterfront facility handling LHG shall conduct a visual inspection for defects of each pressure relief device not capable of being tested.

(b) The operator shall conduct the inspection required by paragraph (a) of this section at least once each calendar year, with intervals between inspections not exceeding 15 months.

§127.1405 Repairs.

Each operator of a waterfront facility handling LHG shall ensure that—

(a) Equipment is repaired so that—

(1) The equipment continues to meet the applicable requirements in this subpart; and

(2) Safety is not compromised; and

(b) Welding and cutting meet NFPA 51B.

§127.1407 Tests.

(a) Each operator of a waterfront facility handling LHG shall conduct a static liquid-pressure test of the piping, hoses, and loading arms of the LHG-transfer system located in the marine transfer area for LHG, and shall verify the set pressure of the safety and relief valves—

(1) After the system or the valves are altered;

(2) After major repairs to the system or the valves;

(3) After any increase in the MAWP of the system; and

(4) At least once each calendar year, with intervals between tests not exceeding 15 months.

(b) The pressure for the test under paragraph (a) of this section must be at least 1.1 times the MAWP and last for at least 30 minutes.

(c) The operator shall conduct a test of each pressure gauge, to ensure that the displayed pressure is within 10 percent of the actual pressure, at least once each calendar year, with intervals between tests not exceeding 15 months.

(d) The operator shall conduct a test of each item of remote operating or indicating equipment, such as a remotely operated valve, at least once each calendar year, with intervals between tests not exceeding 15 months.

(e) The operator shall conduct a test of the emergency shutdown required by §127.1205 at least once every two months, to ensure that it will perform as intended. If transfers of LHG occur less often than every two months, the operator may conduct this test before

each transfer instead of every two months.

(f) The operator shall conduct a test of the warning alarm required by § 127.1207 at least once every six months, to ensure that it will perform as intended. If transfers of LHG occur less often than every six months, the operator may conduct this test before each transfer instead of every six months.

§ 127.1409 Records.

(a) Each operator of a waterfront facility handling LHG shall keep on file:

(1) A description of the components inspected or tested under § 127.1403 or 127.1407.

(2) The date and results of each inspection or test under § 127.1403 or 127.1407.

(3) A description of any repair made after the inspection or test.

(4) The date and a description of each alteration or major repair to the LHG transfer system or its valves.

(b) The operator shall keep this information on file for at least 24 months after the inspection, test, alteration, or major repair.

FIREFIGHTING EQUIPMENT

§ 127.1501 General.

(a) The number, kind, and place of equipment for fire detection, protection, control, and extinguishment must be determined by an evaluation based upon sound principles of fire-protection engineering, analysis of local conditions, hazards within the waterfront facility handling LHG, and exposure to other property. A description of the number, kind, place, and use of fire equipment determined by this evaluation must appear in the Emergency Manual for each facility. The evaluation for each new facility and for all new construction on each existing facility must be submitted to the COTP for review when the emergency manual is submitted under § 127.1307.

(b) All fire equipment for each facility must be adequately maintained, and periodically inspected and tested, so it will perform as intended.

(c) The following must be red or some other conspicuous color and be in places that are readily accessible:

(1) Hydrants and standpipes.

(2) Hose stations.

(3) Portable fire extinguishers.

(4) Fire monitors.

(d) Fire equipment must bear the approval, if applicable, of Underwriters Laboratories, Inc., Factory Mutual Research Corporation, or other independent laboratory recognized by NFPA.

[CGD 88–049, 60 FR 39796, Aug. 3, 1995, as amended by USCG–1999–5832, 64 FR 34714, June 29, 1999]

§ 127.1503 Portable fire extinguishers.

Each operator of a waterfront facility handling LHG must provide portable fire extinguishers of appropriate, number, size, and kind in the marine transfer area for LHG in accordance with NFPA 10.

§ 127.1505 Emergency response and rescue.

(a) Each waterfront facility handling LHG must arrange for emergency response and rescue pending the arrival of resources for firefighting or pollution control. Response and rescue may be performed by facility personnel or by an off-site organization.

(1) If response and rescue are performed by facility personnel, appropriate training and equipment for personnel protection must be furnished to those personnel. Training and equipment that meets 29 CFR 1910.120, hazardous-waste operations and emergency response, will be appropriate.

(2) If response and rescue are performed by an off-site organization, the organization must enter into a written agreement with the facility indicating the services it will perform and the time within which it will perform them to injured or trapped personnel.

(b) [Reserved]

§ 127.1507 Water systems for fire protection.

(a) Each waterfront facility handling LHG must have a supply of water and a means for distributing and applying the water to protect personnel; to cool storage tanks, equipment, piping, and vessels; and to control unignited leaks and spills in the marine transfer area

for LHG except when the evaluation required by §127.1501(a) indicates otherwise. The evaluation must address fire protection for structures, cargo, and vessels. Each water system must include on the pier or wharf at least one 2½-inch supply line, one 2½-inch fire hydrant, and enough 2½-inch hose to connect the hydrant to the vessel.

(b) Each water system must fully and simultaneously supply, for at least 2 hours, all fixed fire-protection systems, including monitor nozzles, at their designed flow and pressure for the worst single incident foreseeable, plus 63 L/s (1000 gpm) for streams from hand-held hoses.

§127.1509 Equipment for controlling and extinguishing fires.

(a) Within each marine transfer area for LHG of each waterfront facility handling LHG that transfers a flammable LHG, portable or wheeled fire extinguishers suitable for gas fires, preferably dry chemical extinguishers, must be available at strategic sites, as determined by the evaluation required by §127.1501(a).

(b) Fixed systems for extinguishing or controlling fires may be appropriate for protection against particular hazards. The evaluation required by §127.1501(a) may specify the use of one or more of the following fixed systems:

(1) Low-, medium-, or high-expansion foam.

(2) Dry chemicals.

(3) Water applied as deluge, spray, or sprinkle.

(4) Carbon dioxide.

(5) Other NFPA approved fire extinguishing media.

§127.1511 International shore connection.

Each marine transfer area for LHG that receives foreign flag vessels must have an international shore connection meeting the requirements of ASTM F–1121.

FIRE PROTECTION

§127.1601 Smoking.

Each operator of a waterfront facility handling LHG shall ensure that no person smokes in the marine transfer area for LHG unless—

(a) Neither flammable LHG nor its vapors are present in the area; and

(b) The person is in a place designated and marked in accordance with local law.

§127.1603 Hotwork.

Each operator of a waterfront facility handling LHG shall ensure that no person conducts welding, torch cutting, or other hotwork on the facility, or on a vessel moored to the facility, unless—

(a) The COTP has issued a permit for that hotwork; and

(b) The conditions of the permit are met.

§127.1605 Other sources of ignition.

Each operator of a waterfront facility handling LHG shall ensure that in the marine transfer area for LHG—

(a) There are no open fires or open flame lamps;

(b) Heating equipment will not ignite combustible material;

(c) Each chimney and appliance has a spark arrestor if it uses solid fuel or is located where sparks may ignite combustible material; and

(d) All rubbish, debris, and waste go into appropriate receptacles.

[CGD 88–049, 60 FR 39796, Aug. 3, 1995, as amended by CGD 97–023, 62 FR 33363, June 19, 1997]

PART 128—SECURITY OF PASSENGER TERMINALS

Subpart A—General

Sec.
128.100 Does this part apply to me?
128.110 Definitions.
128.120 Incorporation by reference.

Subpart B—Security Program

128.200 What must my Terminal Security Plan cover?
128.210 What are the responsibilities of my terminal security officer?
128.220 What must I do to report an unlawful act and related activity?

Subpart C—Plans and Procedures for Terminal Security

128.300 What is required to be in a Terminal Security Plan?
128.305 Who must submit a Terminal Security Plan?

128.307 What is the procedure for examination?
128.309 What do I do if I need to amend my Terminal Security Plan?
128.311 What is my right of appeal?

AUTHORITY: 33 U.S.C. 1231; 49 CFR 1.46.

SOURCE: CGD 91–012, 61 FR 37654, July 18, 1996, unless otherwise noted.

EDITORIAL NOTE: For a document relating to clarification of part 128, see 61 FR 51597, Oct. 3, 1996.

Subpart A—General

§ 128.100 Does this part apply to me?

This part applies to all passenger terminals in the United States or its territories when being used for the assembling, processing, embarking, or disembarking of passengers or baggage for passenger vessels over 100 gross tons, carrying more than 12 passengers for hire; making a voyage lasting more than 24 hours, any part of which is on the high seas. It does not apply to terminals when serving ferries that hold Coast Guard Certificates of Inspection endorsed for ''Lakes, Bays, and Sounds'', and that transit international waters for only short periods of time, on frequent schedules.

§ 128.110 Definitions.

The definitions in part 120 of this chapter apply to this part, except for the definition of *You*. As used in this part:

You means the owner or operator of a passenger terminal.

[CGD 91–012, 63 FR 53591, Oct. 6, 1998]

§ 128.120 Incorporation by reference.

(a) Certain material is incorporated by reference into this part with the approval of the Director of the Federal Register in accordance with 5 U.S.C. 552(a) and 1 CFR Part 51. To enforce any edition other than that specified in paragraph (b) of this section, the Coast Guard must publish notice of change in the FEDERAL REGISTER and must make the material available to the public. All approved material may be inspected at the Office of the Federal Register, 800 North Capitol Street NW., Suite 700, Washington, DC, and at the U.S. Coast Guard, (G–MES), 2100 Second Street SW., Washington, DC. Copies may be obtain from IMO, 4 Albert Embankment, London SE1 7 SR.

(b) The materials approved for incorporation by reference in this part and the sections affected are:

INTERNATIONAL MARITIME ORGANIZATION (IMO)

4 Albert Embankment, London SE1 7SR

MSC Circular 443, Measures to Prevent Unlawful Acts Against Passengers and Crews on Board Ships September 26, 1986—128.220, 128.300

Subpart B—Security Program

§ 128.200 What must my Terminal Security Plan cover?

(a) If this part applies to your passenger terminal, you must implement for that terminal a program that—

(1) Provides for the safety and security of persons and property in the terminal and aboard each passenger vessel subject to part 120 of this chapter moored at the terminal, against unlawful acts;

(2) Prevents or deters the carriage aboard any such vessel moored at the terminal of any prohibited weapon, incendiary, or explosive on or about any person or within his or her personal articles or baggage, and the carriage of any prohibited weapon, incendiary, or explosive in stowed baggage, cargo, or stores;

(3) Prevents or deters unauthorized access to any such vessel and to restricted areas in the terminal;

(4) Provides appropriate security measures for Security Levels I, II, and III that allow for increases in security when the Commandant or Captain of the Port (COTP) advises you that a threat of an unlawful act exists and may affect the terminal, a vessel, or any person aboard the vessel or terminal;

(5) Designates, by name, a security officer for the terminal;

(6) Provides for the evaluation of all security personnel of the terminal, before hiring, to determine suitability for employment; and

(7) Provides for coordination with vessel security while any passenger vessel subject to part 120 of this chapter is moored at the terminal.

(b) If this part applies to your passenger terminal, you must work with the operator of each passenger vessel subject to part 120 of this chapter, to provide security for the passengers, the terminal, and the vessel. You need not duplicate any provisions fulfilled by the vessel unless directed to by the COTP. When a provision is fulfilled by a vessel, the applicable section of the Terminal Security Plan required by § 128.300 must refer to that fact.

[CGD 91–012, 63 FR 53591, Oct. 6, 1998]

§ 128.210 What are the responsibilities of my terminal security officer?

(a) If this part applies to your passenger terminal, you must designate a security officer for the terminal.

(b) This officer must ensure that—

(1) An initial comprehensive security survey is conducted and updated;

(2) The Terminal Security Plan required by § 128.300 is implemented and maintained, and that amendments to correct its deficiencies and satisfy the security requirements of the terminal are proposed;

(3) Adequate training for personnel responsible for security is provided;

(4) Regular security inspections of the terminal are conducted;

(5) Vigilance is encouraged, as well as is general awareness of security, at the terminal;

(6) All occurrences or suspected occurrences of unlawful acts and related activities are reported under § 128.220 and records of the incident are maintained; and

(7) Coordination, for implementation of the Terminal Security Plan required by § 128.300, takes place with the vessel security officer of each vessel that embarks or disembarks passengers at the terminal.

[CGD 91–012, 63 FR 53592, Oct. 6, 1998]

§ 128.220 What must I do to report an unlawful act and related activity?

(a) Either you or the terminal security officer must report each breach of security, unlawful act, or threat of an unlawful act against the terminal, a passenger vessel subject to part 120 of this chapter destined for or moored at that terminal, or any person aboard the terminal or vessel, to the COTP, to the local office of the Federal Bureau of Investigation (FBI), and to the local police agency having jurisdiction over the terminal.

(b) Either you or the terminal security officer must file a written report of the incident using the form ''Report on an Unlawful Act,'' contained in IMO MSC Circular 443, as soon as possible, to the local COTP.

[CGD 91–012, 63 FR 53592, Oct. 6, 1998]

Subpart C—Plans and Procedures for Terminal Security

§ 128.300 What is required to be in a Terminal Security Plan?

(a) If your passenger terminal is subject to this part, you must develop and maintain, in writing, for that terminal, an appropriate Terminal Security Plan that articulates the program required by § 128.200.

(b) The Terminal Security Plan must be developed and maintained under the guidance in IMO MSC Circular 443 and must address the security of passengers aboard passenger vessels subject to part 120 of this chapter, of members of crews of such vessels, and of employees of the terminal, by establishing security measures to take for Security Levels I, II, and III, to—

(1) Deter unauthorized access to the terminal and its restricted areas and to any passenger vessel moored at the terminal;

(2) Deter the introduction of prohibited weapons, incendiaries, and explosives into the terminal and its restricted areas and onto any passenger vessel moored at the terminal;

(3) Encourage vigilance, as well as general awareness of security, at the terminal;

(4) Provide adequate security training to employees of the terminal;

(5) Coordinate responsibilities for security with the operator of each vessel that embarks or disembarks passengers at the terminal; and

(6) Provide information to employees of the terminal and to law-enforcement personnel, in case of an incident affecting security.

(c) You must amend the Terminal Security Plan to address any known deficiencies.

(d) You must restrict the distribution, disclosure, and availability of information contained in the Terminal Security Plan to those persons with an operational need to know.

[CGD 91–012, 63 FR 53592, Oct. 6, 1998]

§ 128.305 Who must submit a Terminal Security Plan?

(a) The owner or operator of the vessel must submit a Terminal Security Plan whenever—

(1) There is an agreement with you that the owner or operator of the vessel will submit the Plan;

(2) The owner or operator of the vessel has exclusive use of the pier and terminal building immediately adjacent to the pier and has complete control of that area;

(3) There is no terminal; or

(4) Passengers embark or disembark but no baggage or stores are loaded or offloaded.

(b) In the situations described in paragraphs (a)(3) and (4) of this section, the owner or operator of the vessel may, with the permission of the cognizant COTP, use an annex to the vessel's security plan instead of a Terminal Security Plan.

(c) You must submit a Terminal Security Plan whenever—

(1) There is an agreement with the owner or operator of the vessel that you will submit the Plan;

(2) No security agreement exists; or

(3)(i) At least one vessel other than a passenger vessel uses the terminal;

(ii) More than one passenger vessel line uses the terminal; or

(iii) The terminal loads or offloads baggage or stores.

[CGD 91–012, 63 FR 53592, Oct. 6, 1998]

§ 128.307 What is the procedure for examination?

(a) Unless a plan for your passenger terminal will be submitted by an entity other than yourself under § 128.305 or § 120.303 of this chapter, you must submit two copies of each Terminal Security Plan required by § 128.300 to the COTP for examination at least 60 days before transferring passengers to or from a vessel subject to part 120 of this chapter.

(b) If the COTP finds that the Terminal Security Plan meets the requirements of § 128.300, he or she will return a copy to you marked ''Examined by the Coast Guard.''

(c) If the COTP finds that the Terminal Security Plan does not meet the requirements of § 128.300, he or she will return the Plan with an explanation of why it does not meet them.

(d) No terminal subject to this part may transfer passengers to or from a passenger vessel subject to part 120 of this chapter, unless it holds either a Terminal Security Plan that we have examined or a letter from the COTP stating that we are currently reviewing the Plan and that normal operations may continue until the COTP has determined whether the Plan meets the requirements of § 128.300.

[CGD 91–012, 63 FR 53592, Oct. 6, 1998]

§ 128.309 What do I do if I need to amend my Terminal Security Plan?

(a) If your passenger terminal is subject to this part, you must amend your Terminal Security Plan when directed by the COTP, and may amend it on your own initiative.

(b) You must submit each proposed amendment to the Terminal Security Plan you initiate to the COTP for review at least 30 days before the amendment is to take effect, unless he or she allows a shorter period. The COTP will examine the amendment and respond according to § 128.307.

(c) The COTP may direct you to amend your Terminal Security Plan if he or she determines that implementation of the Plan is not providing effective security. Except in an emergency, he or she will issue you a written notice of matters to address and will allow you at least 60 days to submit proposed amendments.

(d) If there is an emergency or other circumstance that makes the procedures in paragraph (c) of this section impracticable, the COTP may give you an order to implement increases in security immediately. The order will incorporate a statement of the reasons for it.

[CGD 91–012, 63 FR 53593, Oct. 6, 1998]

§ 128.311 What is my right of appeal?

Any person directly affected by a decision or action taken by the COTP under this part, may appeal that action or decision to the cognizant District Commander according to the procedures in 46 CFR 1.03–15; the District Commander's decision on appeal may be further appealed to the Commandant according to the procedures in 46 CFR 1.03–25.

[CGD 91–012, 61 FR 37654, July 18, 1996. Redesignated by CGD 91–012, 63 FR 53592, Oct. 6, 1998]

INDEX TO SUBCHAPTER L—WATERFRONT FACILITIES

EDITORIAL NOTE: This listing is provided for informational purposes only. It is compiled and kept up-to-date by the Coast Guard, Department of Transportation.

Section

A

Access to waterfront facilities, and port and harbor areas, including vessels and harbor craft therein 125.15
Alternatives 127.017
Appeal(s) 125.47, 127.015
Appeal, right to 128.309
Applicability 127.001, 128.100
Applications 125.21
Applications, aliens 125.25
Applications, challenges to 125.41
Applications, insufficient information 125.29
Applications, previously denied 125.57
Applications, sponsorship 125.27
Applications, United States citizens 125.230

C

Captain of the Port 125.05
Identification Cards 125.13
Cargoes
Ammonium nitrate, ammonium nitrate fertilizers, ...
Fertilizer mixtures, or nitro carbo nitrate; general provisions 126.28
Cargoes of particular hazard 126.10
Dangerous 126.07
Designated dangerous cargo .....
Supervision and control 126.29
Coast Guard Port Security Card
Form of 125.11
Holders of 125.33
Outstanding applications 125.55
Period of validity 125.12
Persons eligible 125.17
Replacement of lost card 125.51
Standards 125.19
Commandant, action by the 125.45
After appeal 125.49
Approval of applicant 125.31
Commandant, ... 125.01
Notice by 125.35
Communications systems 127.111

D

Definitions 126.01, 127.005, 128.110

Design and construction 127.101
Design and Construction
  Communications systems 127.1111
  Electrical systems 127.1107
  Layout and spacing of marine transfer area for LHG 127.1105
  Lighting systems 127.1109
  Piers and wharves 127.1103
  Piping systems 127.1101
  Transfer hoses and loading arms 127.1102
  Warning signs 127.1113
District Commander 125.03

E

Electrical power systems 127.107
Equipment
  Emergency shutdown 127.205, 127.1205
  Gas detectors, portable 127.203, 127.1203
  Respiratory protection 127.1209
  Sensing and alarm systems 127.201
  Warning alarms 127.207, 127.1207

F

Facilities
  Arrangement of 126.15m
  Automotive equipment 126.15e
  Designated waterfront facility 126.05
  Designated waterfront facility, conditions for 126.15
  Designation of 126.13
  Electrical wiring 126.15h
  ‘‘Facility of particular hazard’’, conditions for designating 126.16
  Fire extinguishing equipment 126.15j
  Guards 126.15a
  Heating equipment and open fires 126.15I
  Lighting 126.15l
  Maintenance stores and supplies 126.15g
  Rubbish and waste material 126.15f
  Smoking 126.15b
  Truck or other motor vehicles 126.15d
  Warning alarms 126.16b
  Welding or hot work 126.15c
Firefighting/Firefighting Equipment
  Dry chemical systems 127.609
  Emergency outfits 127.605
  Emergency response and rescue 127.1505
  Equipment for controlling and extinguishing fires 127.1509
  Fire equipment; general 127.601
  Fire main systems 127.607
  Fires 127.615
  General 127.1501
  Hotwork 127.617
  International shore connection 127.611, 127.1511
  Portable fire extinguishers 127.603, 127.1503
  Smoking 127.613
  Water systems for fire protection 127.1507
Fire Protection
  Hotwork 127.1603

Other sources of ignition 127.1605
Smoking 127.1601

G

Great Lakes 125.08

H

Handling of class 1 (explosive) materials or other dangerous cargoes within or contiguous to waterfront facilities ..... Part 126
Hearings
Boards 125.37
Procedure 125.43
Notice by 125.39

I

Identification Credentials 125.09
Identification credentials for persons requiring access to waterfront facilities or vessels ..... Part 125
Incorporation by reference 127.003, 128.120
Inspections of waterfront facilities 127.011
International Maritime Organization 128.120a

L

Layout and spacing of marine transfer area for LNG 127.105
Letter of intent 127.007
Letter of recommendation 127.009
Lighting systems 127.109

M

Maintenance
General 127.401, 127.1401
Inspections 127.403, 127.1403
Records 127.409, 127.1409
Repairs 127.405, 127.1405
Testing 127.407, 127.1407

O

Operations
Bulk storage 127.313
Declaration of Inspection 127.317
Emergency Manual 127.307, 127.1307
LNG release 127.321
LNG transfer 127.319
Motor vehicles 127.311
Operations Manual and Emergency Manual; use of 127.309
Operations Manual 127.305, 127.1305
Qualifications and certification of persons in charge of shoreside transfer operations 127.301, 127.1301
Suspension order, compliance with 127.303
Suspension order, compliance with 127.1303
Training 127.1302
Transfer inspection, preliminary 127.315
Operations Manual and Emergency Manual; Examination procedures 127.019

P

Penalties
Handling dangerous cargo without a permit 126.33
Handling designated dangerous cargo without a permit 126.25
Permits
For handling dangerous cargo 126.27
For handling designated dangerous cargo 126.19
Termination of general permits 126.31
Termination or suspension of permits 126.23
Transactions 126.21
Personnel Training
Applicability 127.501
Training, general 127.503
Piers and wharves 127.103
Plan
Amendment 128.307
Examination procedure 128.305
General 128.300
Primary Responsibility 126.35

R

Reporting of unlawful acts and related activities 128.220

S

Security
Access to the marine transfer area for LNG 127.703
Communications 127.711
On existing facilities 127.701
Personnel 127.707
Protective enclosures 127.709
Systems 127.705
Security of passenger terminals ..... Part 128
Separability 126.37
Suspension of transfer operations 127.013

T

Terminal security officer 128.210

V

Vessel credential requirements 125.53

W

Warning signs 127.113
Waterfront facility 125.07
Waterfront Facilities Handling Liquefied Hazardous Gas ..... Subpart C
Waterfront Facilities Handling Liquefied Natural Gas ..... Subpart B
Waterfront facilities handling liquefied natural gas and liquefied haz-
ardous gas ..... Part 127
Western Rivers 125.06

SUBCHAPTER M—MARINE POLLUTION FINANCIAL RESPONSIBILITY AND COMPENSATION

PART 133—OIL SPILL LIABILITY TRUST FUND; STATE ACCESS

Sec.
133.1 Purpose.
133.3 Definitions.
133.5 Requests: General.
133.7 Requests: Amount.
133.9 Requests: Where made.
133.11 Requests: Contents.
133.13 Removal actions eligible for funding.
133.15 Determination of eligibility for funding.
133.17 Conduct of removal actions.
133.19 Recordkeeping.
133.21 Records retention.
133.23 Investigation to determine the source and responsible party.
133.25 Notification of Governor's designee.

AUTHORITY: 33 U.S.C. 2712(e); E.O. 12777 (3 CFR, 1991 Comp., p. 351); 49 CFR 1.46.

SOURCE: CGD 92–014, 57 FR 53969, Nov. 13, 1992, unless otherwise noted.

§ 133.1 Purpose.

This part prescribes procedures for the Governor of a State to request payments from the Oil Spill Liability trust Fund (the Fund) for oil pollution removal costs under section 1012(d)(1) of the Oil Pollution Act of 1990 (the Act) (33 U.S.C. 2712(d)(1)).

§ 133.3 Definitions.

(a) As used in this part, the following terms have the same meaning as set forth in section 1001 of the Act (33 U.S.C. 2701): ''discharge'', ''exclusive economic zone'', ''Fund'', ''incident'', ''National Contingency Plan'', ''navigable waters'', ''oil'', ''remove'', ''removal'', ''removal costs'', ''responsible party'', ''State'', and ''United States''.

(b) As used in this part—

Act means Title I of the Oil Pollution Act of 1990 (33 U.S.C. 2701 through 2719).

Director, NPFC, means the person in charge of the U.S. Coast Guard National Pollution Funds Center or that person's authorized representative.

NPFC means the U.S. Coast Guard National Pollution Funds Center, 4200 Wilson Boulevard, suite 1000, Arlington, Virginia 22203–1804.

On-Scene Coordinator or *OSC* means the Federal official predesignated by the Environmental Protection Agency or the U.S. Coast Guard to direct and coordinate all efforts for removal of a discharge, or the mitigation or the prevention of a substantial threat of a discharge, of oil.

Removal action means an incident-specific activity taken under this part to contain or remove a discharge, or to mitigate or prevent a substantial threat of a discharge, of oil.

§ 133.5 Requests: General.

(a) Upon a request submitted in accordance with this part by the Governor of a State or his or her designated State official, the OSC may obtain a Federal Project Number (FPN) and a ceiling not to exceed $250,000 per incident for removal costs. The removal costs must be for the immediate removal of a discharge, or the mitigation or prevention of a substantial threat of a discharge, of oil.

(b) Before a request under this part is made, the State official shall ensure that the procedures in the National Contingency Plan (40 CFR part 300) for notifying Federal authorities of the discharge or threat of discharge have been met.

(c) The Federal Grant and Cooperative Agreement Act of 1977 (31 U.S.C. 6301–6308) and 49 CFR parts 18, 20, 29, and 90 apply to Fund monies obligated for payment under this part.

§ 133.7 Requests: Amount.

(a) The amount of funds that may be requested under this part—

(1) Is limited to the amount anticipated for immediate removal action for a single oil pollution incident, but, in any event, may not exceed $250,000 per incident;

(2) Must be for removal costs consistent with the National Contingency Plan; and

(3) Must be reasonable for the removal actions proposed, considering such factors as quantity and composition of the oil, weather conditions and

customary costs of similar services in the locale.

(b) The funds requested are obligated only to the extent they are determined to be for immediate removal actions which are reasonable and otherwise eligible for payment under this part.

§ 133.9 Requests: Where made.

Requests for access to the Fund under § 133.5 must be made by telephone or other rapid means to the OSC.

§ 133.11 Request: Contents.

In making a request for access to the Fund, the person making the request shall—

(a) Indicate that the request is a State access request under 33 CFR part 133;

(b) Give his or her name, title, department, and State;

(c) Describe the incident in sufficient detail to allow a determination of jurisdiction, including at a minimum the date of the occurrence, type of product discharged, estimated quantity of the discharge, body of water involved, and proposed removal actions for which funds are being requested under this part; and

(d) Indicate the amount of funds being requested.

§ 133.13 Removal actions eligible for funding.

To be eligible for funding under this part, each removal action must meet the following:

(a) Must be for an incident, occurring after August 18, 1990, which resulted in a discharge, or the substantial threat of a discharge, of oil into or upon the navigable waters or adjoining shorelines.

(b) Must comply with the National Contingency Plan.

(c) Must be an immediate removal action.

§ 133.15 Determination of eligibility for funding.

Upon receipt of the information under § 133.11 and, if necessary, from other sources determined to be appropriate at his or her discretion, the OSC will determine whether the proposed removal actions meet the requirements of § 133.13. If necessary, the OSC may seek further clarification of the proposed actions from the State official. The OSC shall expeditiously notify the State official and the Director, NPFC, of his or her decision.

§ 133.17 Conduct of removal actions.

Removal actions funded under this part must be coordinated with the OSC and conducted in accordance with the National Contingency Plan.

§ 133.19 Recordkeeping.

(a) The State official shall maintain detailed records of expenditures made from the funds provided under this part, including records of—

(1) Daily expenditures for each individual worker, giving the individual's name, title or position, activity performed, time on task, salary or hourly rate, travel costs, per diem, out-of-pocket or extraordinary expenses, and whether the individual is normally available for oil spill removal;

(2) Equipment purchased or rented each day, with the daily or hourly rate;

(3) Miscellaneous materials and expendables purchased each day; and

(4) Daily contractor or consultant fees, including costs for their personnel and contractor-owned or rented equipment, as well as that of any subcontractor.

(b) The State official shall submit a copy of these records and a summary document stating the total of all expenditures made to the NPFC official specified in § 133.25(c) within thirty days after completion of the removal actions. A copy of these documents shall also be submitted to the cognizant OSC.

(c) Upon request of the OSC or the NPFC, the State official shall make the original records available for inspection.

(d) If, after inspecting the records, the Director, NPFC, determines that expenditures by a State official from funds obligated under this part were not eligible for funding under this part and the expenditures were not made with the good faith understanding that they were eligible under this part, the Director, NPFC, may seek reimbursement to the Fund from the State.

§133.21 Records retention.

(a) The State official shall maintain all records for ten years following completion of the removal actions.

(b) If any litigation, claim, negotiation, audit, cost recovery, or other action involving the records has been started before the expiration of the ten-year period, the records must be retained until completion of the action and resolution of all issues which arise from it, or until the end of the regular ten-year period, whichever is later.

§133.23 Investigation to determine the source and responsible party.

(a) The State official shall promptly make a thorough investigation to determine the source of the incident and the responsible party.

(b) Upon completion of the investigation, the State official shall forward the results of the investigation and copies of the supporting evidence identifying the source and the responsible party to both the cognizant OSC and the NPFC official specified in §133.25(c).

§133.25 Notification of Governor's designee.

(a) If the Governor of a State anticipates the need to access the Fund under this part, he or she must advise the NPFC in writing of the specific individual who is designated to make requests under this part.

(b) This designation must include the individual's name, address, telephone number, and title or capacity in which employed.

(c) The information required by paragraph (b) of this section must be forwarded to the Chief, Case Management Division, National Pollution Funds Center, Suite 1000, 4200 Wilson Boulevard, Arlington, Virginia 22203–1804.

PART 135—OFFSHORE OIL POLLUTION COMPENSATION FUND

Subpart A—General

Sec.
135.1 Purpose.
135.3 Applicability.
135.5 Definitions.
135.7 Delegation—Fund Administrator.
135.9 Fund address.

Subpart B—Levy of Fees

135.101 Purpose.
135.103 Levy and payment of barrel fee on OCS oil.

Subpart C—Financial Responsibility for Offshore Facilities

135.201 Applicability.
135.203 Amount required.
135.204 Submission of evidence.
135.205 Methods of establishing.
135.207 Insurance as evidence.
135.209 Guaranty as evidence.
135.210 Indemnity as evidence.
135.211 Surety bond as evidence.
135.213 Qualification as self-insurer.
135.215 Certification.
135.219 Notification of changes affecting certification.
135.221 Reapplication for certification.
135.223 Certificates, denial or revocation.

Subpart D—Notification of Pollution Incidents

135.303 Definitions.
135.305 Notification procedures.
135.307 Notification contents.

Subpart E—Access, Denial, and Detention

135.401 Access to vessel, Certificates of Financial Responsibility.
135.403 Sanctions for failure to produce vessel Certificates of Financial Responsibility.
135.405 Appeal provisions.

AUTHORITY: 33 U.S.C. 2701–2719; E.O. 12777, 56 FR 54757; 49 CFR 1.46.

SOURCE: CGD 77–055, 44 FR 16868, Mar. 19, 1979, unless otherwise noted.

Subpart A—General

§135.1 Purpose.

(a) This part prescribes the policies, procedures, and administrative practices regarding offshore oil pollution liability and compensation, including the administration and general operation of the fund established under Title III of the Outer Continental Shelf Lands Act Amendments of 1978 (Pub. L. 95–372, 43 U.S.C. 1811 et. seq.).

§135.3 Applicability.

(a) This part applies to each person who:

(1) Owns oil obtained from the Outer Continental Shelf when the oil in produced;

(2) Owns, operates, or is the guarantor of the owner or operator of any vessel;

(3) Owns, operates, or is the guarantor of the owner or operator of any offshore facility;

(4) Sustains an economic loss as a consequence of oil pollution arising from Outer Continental Shelf activities; or

(5) Otherwise has responsibilities under Title III of the Act and the regulations in this part.

§ 135.5 Definitions.

(a) As used in this part, the following terms shall have the same meaning as defined in section 301 of Title III of the Outer Continental Shelf Lands Act Amendments of 1978 (Pub. L. 95–372): ''barrel''; ''claim''; ''discharge''; ''facility''; ''Fund''; ''guarantor''; ''incident''; ''offshore facility''; ''oil pollution''; ''operator''; ''owner''; ''person''; ''person in charge''; ''public vessel''; and ''vessel''.

(b) As used in this part:

(1) *Act* means Title III of the Outer Continental Shelf Lands Act Amendments of 1978 (Pub. L. 95–372), entitled ''Offshore Oil Spill Pollution Fund''.

(2) *Captain of the Port* means a Coast Guard officer designated as Captain of the Port for the areas described in Part 3 of this chapter, or that person's authorized representative or, where there is no Captain of the Port area, the District Commander.

(3) *Commandant* means the Commandant of the Coast Guard or that person's authorized representative.

(4) *District Commander* means the Coast Guard officer commanding a Coast Guard District described in Part 3 of this chapter, or that person's authorized representative.

(5) *Fund Administrator* means the person to whom the authority and functions of the Commandant as administrator of the Fund are delegated.

(6) *Oil* means petroleum, including crude oil or any fraction or residue therefrom and natural gas condensate, except that the term does not include natural gas.

(7) *Outer Continental Shelf* or *OCS* means ''outer Continental Shelf'' as defined in section 2(a) of the Outer Continental Shelf Lands Act (43 U.S.C.1331(a)).

§ 135.7 Delegation—Fund Administrator.

(a) The Fund Administrator is delegated authority to perform those functions assigned or delegated to the Secretary of Transportation under the Act not reserved by the Secretary of Transportation or the Commandant.

(b) The Fund Administrator may redelegate and authorize successive redelegations of the authority granted in paragraph (a) of this section within the command under which that person has jurisdiction or to members of the Fund staff.

§ 135.9 Fund address.

The address to which correspondence relating to the Coast Guard's administration of the Fund should be directed is: U.S. Coast Guard National Pollution Funds Center, 4200 Wilson Boulevard, Suite 1000, Arlington, VA 22203–1804.

[CGD 86–032, 52 FR 23175, June 18, 1987, as amended by CGD 88–052, 53 FR 25120, July 1, 1988; USCG 1998–3799, 63 FR 35530, June 30, 1998]

Subpart B—Levy of Fees

§ 135.101 Purpose.

(a) The purpose of this subpart is to state the general requirements concerning the levy of fees.

§ 135.103 Levy and payment of barrel fee on OCS oil.

(a) A fee of $.03 per barrel is levied on all oil produced on the OCS and is imposed upon the owner of the oil when such oil is produced.

(b) The owner of oil obtained from the OCS shall, for the purpose of computing the barrel fee levied in paragraph (a) of this section, measure OCS oil production by employing the methods and criteria of the Minerals Management Service contained in 30 CFR 250.180.

(c) The barrel fee levied in paragraph (a) of this section applies whenever the unobligated Fund balance is less than $200,000,000.

(d) Payment of the fee levied in paragraph (a) of this section is made in accordance with the fee collection regulations of the IRS at 26 CFR part 301, § 301.9001. Federal government entitlement to royalty oil does not constitute ownership of oil at time of production. The Fund Administrator advises the IRS when the unobligated Fund balance requires starting or stopping the collection of the barrel fee levied in this section, so the IRS may provide appropriate notice to affected owners of OCS oil.

[CGD 88–050, 53 FR 52997, Dec. 30, 1988, as amended by CGD 90–005, 55 FR 17268, Apr. 24, 1990]

Subpart C—Financial Responsibility for Offshore Facilities

§ 135.201 Applicability.

(a) This subpart applies to the owner or operator of each offshore facility required by the Act to establish and maintain evidence of financial responsibility.

(b) For the purpose of this subpart:

(1) All structures, including platforms, wells, and pipelines, are considered a single offshore facility if they are physically connected, located upstream of the point of custody transfer, within the same oil field, and under one ownership.

(2) If separate parts of a structure, including platforms and pipelines, are owned separately, each part having common ownership is considered a separate offshore facility.

(3) A mobile offshore drilling unit is considered an offshore facility from the moment a drill shaft or other device connected to the unit first touches the seabed or connects to a well for the purposes of exploration, development, or production of oil until drilling is completed and the unit is no longer attached to the well or drill hole by any device.

(4) A mobile offshore drilling unit considered an offshore facility under paragraph (b)(3) of this section remains a separate facility when physically connected to another offshore facility, unless both are under one ownership.

(5) All segments of a common carrier pipeline from the point of custody transfer to the shore, including any pumping or booster stations, which are under one ownership are considered a single offshore facility.

(6) Any pipeline, which is under one ownership, between two offshore facilities, or between an offshore facility and the shore, is considered a single offshore facility.

(7) Offshore facilities which drill for, produce, or process only natural gas are not subject to this subpart unless the facilities have the capacity to transport, store, or otherwise handle more than 1,000 barrels of condensate at any one time.

NOTE: Regulations governing financial responsiblity and certification for vessels are promulgated by the Federal Maritime Commission.

§ 135.203 Amount required.

(a) Each facility that is used for drilling for, producing, or processing oil, or which has the capacity to transport, store, transfer, or otherwise handle more than one thousand barrels of oil at any one time must be covered by evidence of financial responsibility submitted by or on behalf of the owner or operator of the facility, in the amount of $35,000,000.

(b) Evidence of financial responsibility established and maintained by a person who owns or operates more than one facility, or who has an interest in the ownership or operation of more than one facility, may be applied by that person towards establishing and maintaining the required evidence of financial responsibility for each facility in which that person has an interest, if the evidence is available to satisfy liabilities arising out of incidents involving those facilities.

§ 135.204 Submission of evidence.

(a) Where the offshore facility is owned and operated solely by one person, that person must establish and maintain evidence of financial responsibility covering the facility.

(b) Where the offshore facility is owned in its entirety by one person and operated solely by another person, evidence of financial responsibility covering the facility must be established and maintained by either the owner or the operator, or, in consolidated form, by both the owner and operator.

(c) Where the offshore facility is owned or operated by more than one person, evidence of financial responsibility covering the facility must be established and maintained by any one of the owners or operators, or, in consolidated form, by or on behalf of two or more owners or operators.

(d) When evidence of financial responsibility is established in a consolidated form, the proportional share of each participant must be shown. The evidence must be accompanied by a statement authorizing the applicant to act for and in behalf of each participant in submitting and maintaining the evidence of financial responsibility.

(e) Each owner and operator of a facility is subject to the penalty provided by section 312(a) of the Act if evidence of financial responsibility is not established and maintained for that facility.

§ 135.205 Methods of establishing.

(a) Evidence of financial responsibility may be established by any one, or any combination acceptable to the Fund Administrator, of the following methods:

(1) Insurance;

(2) Guaranty;

(3) Indemnity;

(4) Surety bond; or

(5) Qualification as self-insurer.

(b) The Fund Administrator will accept alternative evidence of financial responsibility if, in the Fund Administrator's opinion, it establishes an equivalent degree of financial responsibility for the purposes of this subpart.

§ 135.207 Insurance as evidence.

(a) Insurance filed with the Fund Administrator as evidence of financial responsibility shall be issued by an insurer that is acceptable to the Fund Administrator. Those insurers may include domestic and foreign insurance companies, corporations or associations of individual insurers, protection and indemnity associations, or other persons acceptable to the Fund Administrator.

(b) An insurer must:

(1) Agree to be sued directly, within the limits of the policy coverage, by any person for claims under the Act against the owner or operator; and

(2) Designate an agent in the United States for service of process.

(c) Insurance as evidence of financial responsibility must indicate the effective date in the endorsement on the application for Certificate of Financial Responsibility, and must remain in force until the date of termination indicated in the endorsement or until—

(1) 30 days after mailing, by certified mail, to the Fund Administrator, and the person insured, notification of intent to cancel; or

(2) Other evidence of financial responsibility acceptable to the Fund Administrator has been established; or

(3) The facility to which the insurance applies ceases to be a facility under § 135.201(b).

(d) Termination of insurance coverage shall not affect the liability of the insurer for an incident occurring before the effective date of termination.

(e) Confirmation of insurance may be accepted from an insurance broker that is acceptable to the Fund Administrator, subject to the Fund Administrator's approval of the individual underwriters, in lieu of their signature on an application, provided the confirmation:

(1) States the insurance covers liabilities under the Act;

(2) Sets forth the limit and deductible;

(3) Provides for direct action against the individual underwriters to the extent of their contracts;

(4) Names the underwriters and percentages of the limit accepted by each;

(5) States that the underwriters agree to give prior written notice of cancellation or change to the Fund Administrator as required in paragraph (c) of this section; and

(6) States that the notice indicated in paragraph (e)(5) of this section will not affect the underwriter's liability for incidents occurring before the effective date of cancellation.

§ 135.209 Guaranty as evidence.

(a) Guarantors must:

(1) Agree to be sued directly, within the limits the guaranty, by any person for claims under the Act against the owner or operator; and

(2) Designate an agent in the United States for service of process.

(b) Guaranties filed as evidence of financial responsibility must be accompanied by the same proof that the Guarantor is financially responsible as this subpart would require of the owner or operator; i.e. insurance, surety bond, self-insurance, or other acceptable methods.

(c) A guaranty as evidence of financial responsibility must indicate the effective date in the endorsement on the application for Certificate of Financial Responsibility, and must remain in force until the date of termination indicated in the endorsement or until:

(1) 30 days after mailing, by certified mail, to the Fund Administrator, and the person guarantied, notification of intent to cancel; or

(2) Other evidence of financial responsibility acceptable to the Fund Administrator has been established; or

(3) The facility to which the guaranty applies ceases to be a facility under § 135.201(b).

(d) Termination of the guaranty shall not affect the liability of the guarantor for an incident occurring before the effective date of termination.

§ 135.210 Indemnity as evidence.

(a) An indemnitor must:

(1) Agree to be sued directly, within the limits of the contract coverage, by any person for claims under the Act against the owner or operator to the extent of the indemnity coverage; and

(2) Designate an agent in the United States for service of process.

(b) Indemnity filed as evidence of financial responsibility must be accompanied by the same proof of the indemnitor's financial responsibility as this subpart would require of the owner or operator; i.e. insurance, surety bond, self-insurance; or other acceptable methods.

(c) An indemnity as evidence of financial responsibility must indicate the effective date in the endorsement on the application for Certificate of Financial Responsibility, and must remain in force until the date of termination indicated in the endorsement or until—

(1) 30 days after mailing, by certified mail, to the Fund Administrator, and the person indemnified, notification of intent to cancel; or

(2) Other evidence of financial responsibility acceptable to the Fund Administrator has been established; or

(3) The facility to which the indemnity applies ceases to be a facility under § 135.201(b).

(d) Termination of an indemnity shall not affect the liability of the indemnitor for an incident occurring before the effective date of termination.

§ 135.211 Surety bond as evidence.

(a) Each surety bond filed with the Fund Administrator as evidence of financial responsibility shall be issued by a bonding company that:

(1) Is authorized to do business in the United States;

(2) Is licensed to do business in the state or territory in which the bond is executed;

(3) Is certified by the Department of the Treasury with respect to the issuance of Federal bonds in the penal sum of the bond; and

(4) Designates an agent in the United States for service of process.

(b) The bonding company must agree to be sued directly, within the limits of the surety bond, by any person for claims under the Act against the owner or operator.

(c) A surety bond as evidence of financial responsibility must indicate the effective date in the endorsement on the application for Certificate of Financial Responsibility, and must remain in force until the date of termination indicated in the endorsement or until:

(1) 30 days after mailing, by certified mail, to the Fund Administrator, and the person bonded, notification of intent to cancel; or

(2) Other evidence of financial responsibility acceptable to the Fund Administrator has been established; or

(3) The facility to which the surety bond applies ceases to be a facility under § 135.201(b).

(d) Termination of the surety bond shall not affect the liability of the surety for an incident occurring before the effective date of termination.

§ 135.213 Qualification as self-insurer.

(a) Qualification for self insurance must be supported by a copy of the self-insurer's current balance sheet, income statement, and statement of changes in financial position that are certified by an independent Certified Public Accountant and must be accompanied by either:

(1) An additional statement confirming that the self-insurer's current U.S. assets, including those of consolidated subsidiaries held in the U.S., not including pledged assets or stock not publicly traded, exceed the current U.S. liabilities, and the self-insurers net worth exceeds the amount of the requested self-insurance; or

(2) A statement, based on an analysis of the self-insurer's financial position, which shows that sufficient assets or cash flow, other than which might be damaged as a result of a pollution incident, are available which may be liquidated to provide the funds necessary to retire a claim for the amount of the self-insurance without placing the self-insurer in an insolvent position.

(b) The statements required by paragraphs (a) (1) and (2) of this section must be prepared and submitted by the involved Certified Public Accountant when the required financial statements are prepared in consolidated form and the liability represents less than the full financial backing of the consolidated entity, otherwise they may be prepared and submitted by the Treasurer or equivalent official.

(c) If the self-insurer files a Securities and Exchange Commission Form 10–K report, a copy of the self-insurer's most recent 10–K report must be filed with the Fund Administrator within 120 days after the end of the fiscal year to which it relates, in addition to filing the most recent 10–K report with the initial application.

(d) Each self-insurer must file annually with the Fund Administrator, copies of documents required under paragraph (a) of this section, within 120 days after the close of the self-insurer's fiscal accounting period. If a self-insurer files a 10–K report with the Fund Administrator under paragraph (c) of this section which contains some of the financial statements required in paragraph (a), a separate filing of those specific statements need not be made.

§ 135.215 Certification.

(a) Applicants shall:

(1) If the facility is in existence before September 17, 1979, apply for a Certificate of Financial Responsibility before September 17, 1979.

(2) If the offshore facility is not in existence on September 17, 1979, apply for a Certificate of Financial Responsibility at least 45 days before placing the offshore facility into operation or coverage becomes effective.

(3) If submitting an application to include an additional facility under previously established evidence of financial responsibility, apply for a Certificate of Financial Responsibility as early as possible before the anticipated date of desired coverage.

(b) Each application for a Certificate of Financial Responsibility must be made on a Coast Guard prescribed Application for Certificate of Financial Responsibility form, available from the Fund Administrator or any Coast Guard District Office. This form must be submitted for each facility; however, if evidence of financial responsibility has been previously established in an amount sufficient to meet § 135.203 (a), no additional evidence need be submitted with the application.

(c) Each application form submitted under this section must be signed by the applicant. A written statement proving authority to sign must also be submitted where the signer is not disclosed as an individual (sole proprietor) applicant, a partner in a partnership applicant, or a director or other officer of a corporate applicant.

(d) Financial data or other information submitted under this section that is proprietary in nature, or constitutes a trade secret, must be clearly designated as such to insure confidential treatment by the Fund Administrator, under 5 U.S.C. 552, the Freedom of Information Act, which provides for exemption from disclosure of trade secret data.

(e) If any of the information submitted for certification is determined

by the Fund Administrator to be insufficient the Fund Administrator may require additional information before final consideration of the application.

(f) Certificates, as issued, are to be considered property of the U.S. Government, are not to be altered in any manner, and must be surrendered on demand when revoked in accordance with §135.223 of this subpart.

(g) Applicants shall obtain a Certificate of Financial Responsibility for each facility.

§135.219 Notification of changes affecting certification.

(a) Each owner, operator, or guarantor of an offshore facility shall within ten days notify the Fund Administrator in writing when any changes occur which prevent the owner, operator, or guarantor, from meeting the obligations for which a Certificate of Financial Responsibility has been issued.

(b) Based on notice of a change in financial capability under paragraph (a) of this section, the Fund Administrator may revoke a Certificate of Financial Responsibility.

§135.221 Reapplication for certification.

(a) If a Certificate of Financial Responsibility becomes invalid for any reason, an application for a new certificate must be immediately submitted to the Fund Administrator in accordance with §135.204.

§135.223 Certificates, denial or revocation.

(a) A certificate may be denied or revoked for any of the following reasons:

(1) Making any willfully false statement to the Fund Administrator in connection with establishing or maintaining evidence of financial responsibility.

(2) Failure of an applicant or certificant to establish or maintain evidence of financial responsibility as required by the regulations in this subpart.

(3) Failure to comply with or respond to inquiries, regulations, or orders of the Fund Administrator concerning establishing or maintaining evidence of financial responsibility.

(4) Failure to timely file the reports or documents required by §135.213 (c) and (d).

(5) Cancellation or termination of any insurance policy, surety bond, indemnity, or guaranty issued under this subpart or modification thereto which reduces the financial capacity of the applicant or certificant to meet the requirements of this subpart, unless substitute evidence of financial responsibility has been submitted to and accepted by the Fund Administrator.

(b) Denial or revocation of a certificate shall be immediate and without prior notice in a case where the applicant or certificant:

(1) Is no longer the owner or operator of the offshore facility in question;

(2) Fails to furnish acceptable evidence of financial responsibility in support of an application; or

(3) Permits the cancellation or termination of the insurance policy, surety bond, indemnity, or guaranty upon which the continued validity of the certificate is based.

(c) In any other case, before the denial or revocation of a certificate, the Fund Administrator advises the applicant or certificant, in writing, of the intention to deny or revoke the certificate, and shall state the reason therefor.

(d) If the reason for an intended revocation is failure to file the reports or documents required by §135.213 (c) and (d) the revocation shall be effective 10 days after the date of receipt of the notice of intention to revoke, unless the certificant shall, before revocation, submit the required material or demonstrate that the required material was timely filed.

(e) If the intended denial or revocation is based upon one of the reasons in paragraph (a)(1) or (a)(3) of this section, the applicant or certificant may request, in writing, a hearing to show that the applicant or certificant is in compliance with this subpart. If the applicant or certificant fails to file a timely request for a hearing, the denial or revocation is effective 10 days after receipt of the notice.

(f) If a request for a hearing under paragraph (e) of this section is received by the Fund Administrator within 10

days after the date of receipt of a notice of intention to deny or revoke, the Fund Administrator grants a hearing and notifies the requesting party of the date, time, and location of the hearing. If a requesting party fails to enter an appearance at the scheduled hearing, or in lieu thereof fails to submit written evidence for the consideration of the hearing official, denial or revocation is effective as of the scheduled date and time of the hearing, unless an extension of time is granted by the Fund Administrator for good cause shown.

(g) Hearings under this section are informal and are conducted by an official designated by the Fund Administrator. The official conducting the hearing considers all relevant material submitted and makes recommendations to the Fund Administrator.

(h) The Fund Administrator's decision is final agency action.

Subpart D—Notification of Pollution Incidents

§ 135.303 Definitions.

As used in this subpart:

Occurrences which pose an imminent threat of oil pollution means those incidents that are likely to result in a discharge of oil and include, but are not limited to: vessel collisions, grounding or stranding; structural failure in a tank, pipeline or other oil handling system; fire, explosion or other events which may cause structural damage to a vessel or offshore facility.

[CGD 77–055, 44 FR 16868, Mar. 19, 1979, as amended by CGD 91–035, 57 FR 36316, Aug. 12, 1992]

§ 135.305 Notification procedures.

(a) The person in charge of a vessel or offshore facility that is involved in an incident, including occurrences which pose an imminent threat of oil pollution shall, as soon as that person has knowledge of the incident, immediately notify by telephone, radio telecommunication or a similar rapid means of communication, in the following order of preference:

(1) (Within or offshore of the 48 contiguous States only) The Duty Officer, National Response Center, U.S. Coast Guard, 2100 Second Street, SW., Washington, DC 20593–0001, toll free telephone number 800–424–8802; or

(2) The commanding officer or supervisor of any Coast Guard Marine Safety Office, Captain of the Port Office, Marine Safety Detachment or Port Safety Detachment in the vicinity of the incident; or

(3) The commanding officer or officer in charge of any other Coast Guard unit in the vicinity of the incident; or

(4) The Commander of any Coast Guard District.

(b) Notification given in accordance with this subpart constitutes fulfillment of the requirements of Subpart C of 33 CFR Part 153 concerning Notice of the Discharge of Oil.

[CGD 77–055, 44 FR 16868, Mar. 19, 1979, as amended by USCG–1998–3799, 63 FR 35530, June 30, 1998]

§ 135.307 Notification contents.

(a) In each notification provided under § 135.305, the person in charge of the vessel or offshore facility involved in the incident shall provide his or her name and telephone number, or radio call sign, and, to the extent known, the:

(1) Location, date and time of the incident;

(2) Quantity of oil involved;

(3) Cause of the incident;

(4) Name or other identification of the vessel or offshore facility involved;

(5) Size and color of any slick or sheen and the direction of movement;

(6) Observed on scene weather conditions, including wind speed and direction, height and direction of seas, and any tidal or current influence present;

(7) Actions taken or contemplated to secure the source or contain and remove or otherwise control the discharged oil;

(8) Extent of any injuries or other damages incurred as a result of the incident;

(9) Observed damage to living natural resources; and

(10) Any other information deemed relevant by the reporting party or requested by the person receiving the notification.

(b) The person giving notification of an incident must not delay notification to gather all required information and

must provide any information not immediately available when it becomes known.

Subpart E—Access, Denial, and Detention

§ 135.401 Access to vessel, Certificates of Financial Responsibility.

(a) The owner, operator, master or agent of any vessel subject to the Act shall, upon request by any Coast Guard officer or petty officer, permit access to the vessel and produce for examination the Certificate of Financial Responsibility.

§ 135.403 Sanctions for failure to produce vessel Certificates of Financial Responsibility.

(a) The Captain of the Port issues denial or detention orders to the owner, operator, agent, or master of any vessel that cannot show upon request a valid Certificate of Financial Responsibility issued under the Act.

(b) A denial order forbids entry of any vessel subject to the Act to any port or place in the United States or to the navigable waters of the United States.

(c) A detention order detains any vessel subject to the Act at the port or place in the United States from which it is about to depart for any other port or place in the United States.

(d) The Captain of the Port terminates a denial or detention order when the owner, operator, agent, or master of a vessel furnishes adequate evidence that the certification of financial responsibility requirements under the Act have been met.

§ 135.405 Appeal provisions.

(a) The owner, operator, agent or master of a vessel issued a denial or detention order under this subpart may petition the District Commander in any manner to review that order.

(b) Upon completion of review, the District Commander affirms, sets aside, or modifies the order.

(c) Unless otherwise determined by the District Commander a denial or detention order remains in effect pending the outcome of any petition or appeal of that order.

(d) The District Commander acts on all petitions or appeals within 10 days of receipt.

(e) The decision of the District Commander is final agency action.

PART 136—OIL SPILL LIABILITY TRUST FUND; CLAIMS PROCEDURES; DESIGNATION OF SOURCE; AND ADVERTISEMENT

Subpart A—General

Sec.
136.1 Purpose and applicability.
136.3 Information.
136.5 Definitions.
136.7 Foreign claimants.
136.9 Falsification of claims.

Subpart B—General Procedure

136.101 Time limitations on claims.
136.103 Order of presentment.
136.105 General requirements for a claim.
136.107 Subrogated claims.
136.109 Removal costs and multiple items of damages.
136.111 Insurance.
136.113 Other compensation.
136.115 Settlement and notice to claimant.

Subpart C—Procedures for Particular Claims

REMOVAL COSTS

136.201 Authorized claimants.
136.203 Proof.
136.205 Compensation allowable.

NATURAL RESOURCES

136.207 Authorized claimants.
136.209 Proof.
136.211 Compensation allowable.

REAL OR PERSONAL PROPERTY

136.213 Authorized claimants.
136.215 Proof.
136.217 Compensation allowable.

SUBSISTENCE USE

136.219 Authorized claimants.
136.221 Proof.
136.223 Compensation allowable.

GOVERNMENT REVENUES

136.225 Authorized claimants.
136.227 Proof.
136.229 Compensation allowable.

PROFITS AND EARNING CAPACITY

136.231 Authorized claimants.
136.233 Proof.
136.235 Compensation allowable.

GOVERNMENT PUBLIC SERVICES

136.237 Authorized claimants.
136.239 Proof.
136.241 Compensation allowable.

Subpart D—Designation of Source and Advertisement

GENERAL

136.301 Purpose.
136.303 Definitions.

DESIGNATION OF SOURCE

136.305 Notice of designation.
136.307 Denial of designation.

ADVERTISEMENT

136.309 Advertisement determinations.
136.311 Types of advertisement.
136.313 Content of advertisement.

AUTHORITY: 33 U.S.C. 2713, 2714; E.O. 12777, 3 CFR, 1991 Comp., p. 351; 49 CFR 1.46.

SOURCE: CGD 91–035, 57 FR 36316, Aug. 12, 1992, unless otherwise noted.

Subpart A—General

§ 136.1 Purpose and applicability.

(a) This part prescribes regulations for—

(1) Presentation, filing, processing, settlement, and adjudication of claims authorized to be presented to the Oil Spill Liability Trust Fund (the Fund) under section 1013 of the Oil Pollution Act of 1990 (the Act) (33 U.S.C. 2713) for certain uncompensated removal costs or uncompensated damages resulting from the discharge, or substantial threat of discharge, of oil from a vessel or facility into or upon the navigable waters, adjoining shorelines, or the exclusive economic zone;

(2) Designation of the source of the incident, notification to the responsible party of the designation, and advertisement of the designation and claims procedures; and

(3) Other related matters.

(b) This part applies to claims resulting from incidents occurring after August 18, 1990.

(c) Nothing in this part—

(1) Preempts the authority of any State or political subdivision thereof from imposing any additional liability or requirements with respect to—

(i) The discharge of oil or other pollution by oil within such State; or

(ii) Any removal activities in connection with such a discharge; or

(2) Affects or modifies in any way the obligations or liabilities of any person under the Solid Waste Disposal Act (42 U.S.C. 6901 *et seq.*) or State law, including common law; or

(3) Affects the authority of any State—

(i) To establish, or to continue in effect, a fund any purpose of which is to pay for costs or damages arising out of, or directly resulting from, oil pollution or the substantial threat of oil pollution; or

(ii) To require any person to contribute to such a fund; or

(4) Affects the authority of the United States or any State or political subdivision thereof to impose additional liability or additional requirements relating to a discharge, or substantial threat of a discharge, of oil.

§ 136.3 Information.

Anyone desiring to file a claim against the Fund may obtain general information on the procedure for filing a claim from the Director, National Pollution Funds Center, suite 1000, 4200 Wilson Boulevard, Arlington, Virginia 22203–1804, (703) 235–4756.

§ 136.5 Definitions

(a) As used in this part, the following terms have the same meaning as set forth in sections 1001 and 1007(c) of the Act (33 U.S.C. 2701 and 2707(c)): *Claim, claimant, damages, discharge, exclusive economic zone, facility, foreign claimant, foreign offshore unit, Fund, guarantor, incident, National Contingency Plan, natural resources, navigable waters, offshore facility, oil, onshore facility, owner or operator, person, removal costs, responsible party, State, United States, and vessel.*

(b) As used in this part—

Act means title I of the Oil Pollution Act of 1990 (Pub. L. 101–380; 33 U.S.C. 2701 through 2719).

Director, NPFC, means the person in charge of the U.S. Coast Guard National Pollution Funds Center or that person's authorized representative.

FOSC means the Federal On-Scene Coordinator designated under the National Contingency Plan or that person's authorized representative.

NPFC means the U.S. Coast Guard National Pollution Funds Center, suite 1000, 4200 Wilson Boulevard, Arlington, Virginia 22203–1804.

§ 136.7 Foreign claimants.

In addition to other applicable limitations on presenting claims to the Fund, claims by foreign claimants to recover removal costs or damages may be presented only when the requirements of section 1007 of the Act (33 U.S.C. 2707) are met.

§ 136.9 Falsification of claims.

Persons submitting false claims or making false statements in connection with claims under this part may be subject to prosecution under Federal law, including but not limited to 18 U.S.C. 287 and 1001. In addition, persons submitting written documentation in support of claims under this part which they know, or should know, is false or omits a material fact may be subject to a civil penalty for each claim. If any payment is made on the claim, the claimant may also be subject to an assessment of up to twice the amount claimed. These civil sanctions may be imposed under the Program Fraud Civil Remedies Act, 31 U.S.C. 3801–3812, as implemented in 49 CFR part 31.

[CGD 91–035, 57 FR 36316, Aug. 12, 1992, as amended by CGD 96–052, 62 FR 16703, Apr. 8, 1997]

Subpart B—General Procedure

§ 136.101 Time limitations on claims.

(a) Except as provided under section 1012(h)(3) of the Act (33 U.S.C. 2712(h)(3)) (minors and incompetents), the Fund will consider a claim only if presented in writing to the Director, NPFC, within the following time limits:

(1) For damages, within three years after—

(i) The date on which the injury and its connection with the incident in question were reasonably discoverable with the exercise of due care.

(ii) In the case of natural resources damages under section 1002(b)(2)(A) of the Act (33 U.S.C. 2702(b)(2)(A)), the date under paragraph (a)(1)(i) of this section, or within three years from the date of completion of the natural resources damage assessment under section 1006(e) of the Act (33 U.S.C. 2706(e)), whichever is later.

(2) For removal costs, within six years after the date of completion of all removal actions for the incident. As used in this paragraph, ''date of completion of all removal actions'' is defined as the actual date of completion of all removal actions for the incident or the date the FOSC determines that the removal actions which form the basis for the costs being claimed are completed, whichever is earlier.

(b) Unless the Director, NPFC, directs in writing that the claim be submitted elsewhere, a claim is deemed presented on the date the claim is actually received at the National Pollution Funds Center, suite 1000, 4200 Wilson Boulevard, Arlington, Virginia 22203–1804. If the Director, NPFC, directs that the claim be presented elsewhere, the claim is deemed presented on the date the claim is actually received at the address in the directive.

[CGD 91–035, 57 FR 36316, Aug. 12, 1992; 57 FR 41104, Sept. 9, 1992]

§ 136.103 Order of presentment.

(a) Except as provided in paragraph (b) of this section, all claims for removal costs or damages must be presented first to the responsible party or guarantor of the source designated under § 136.305.

(b) Claims for removal costs or damages may be presented first to the Fund only—

(1) By any claimant, if the Director, NPFC, has advertised, or otherwise notified claimants in writing, in accordance with § 136.309(e);

(2) By a responsible party who may assert a claim under section 1008 of the Act (33 U.S.C. 2708);

(3) By the Governor of a State for removal costs incurred by that State; or

(4) By a United States claimant in a case where a foreign offshore unit has discharged oil causing damage for which the Fund is liable under section 1012(a) of the Act (33 U.S.C. 2712(a)).

(c) If a claim is presented in accordance with paragraph (a) of this section and—

(1) Each person to whom the claim is presented denies all liability for the claim; or

(2) The claim is not settled by any person by payment within 90 days after the date upon which (A) the claim was presented, or (B) advertising was begun pursuant to § 136.309(d), whichever is later, the claimant may elect to commence an action in court against the responsible party or guarantor or to present the claim to the Fund.

(d) No claim of a person against the Fund will be approved or certified for payment during the pendency of an action by the person in court to recover costs which are the subject of the claim.

[CGD 91–035, 57 FR 36316, Aug. 12, 1992; 57 FR 41104, Sept. 9, 1992]

§ 136.105 General requirements for a claim.

(a) The claimant bears the burden of providing all evidence, information, and documentation deemed necessary by the Director, NPFC, to support the claim.

(b) Each claim must be in writing for a sum certain for compensation for each category of uncompensated damages or removal costs (as described in Subpart C of this part) resulting from an incident. If at any time during the pendency of a claim against the Fund the claimant receives any compensation for the claimed amounts, the claimant shall immediately amend the claim.

(c) Each claim must be signed in ink by the claimant certifying to the best of the claimant's knowledge and belief that the claim accurately reflects all material facts.

(d) In addition to the other requirements of this section, any claim presented by a legal representative of the claimant must also be signed by the legal representative and—

(1) Be presented in the name of the claimant;

(2) Show the title or legal capacity of the representative; and

(3) Provide proof of authority to act for the claimant.

(e) Each claim must include at least the following, as applicable:

(1) The full name, street and mailing addresses of residence and business, and telephone numbers of the claimant.

(2) The date, time, and place of the incident giving rise to the claim.

(3) The identity of the vessel, facility, or other entity causing or suspected to have caused the removal costs or damages claimed and the basis for such identity or belief.

(4) A general description of the nature and extent of the impact of the incident, the costs associated with removal actions, and damages claimed, by category as delineated in Subpart C of this part, including, for any property, equipment, or similar item damaged, the full name, street and mailing address, and telephone number of the actual owner, if other than the claimant.

(5) An explanation of how and when the removal costs or damages were caused by, or resulted from, an incident.

(6) Evidence to support the claim.

(7) A description of the actions taken by the claimant, or other person on the claimant's behalf, to avoid or minimize removal costs or damages claimed.

(8) The reasonable costs incurred by the claimant in assessing the damages claimed. This includes the reasonable costs of estimating the damages claimed, but not attorney's fees or other administrative costs associated with preparation of the claim.

(9) To the extent known or reasonably identifiable by the claimant, the full name, street and mailing address, and telephone number of each witness to the incident, to the discharge, or to the removal costs or damages claimed, along with a brief description of that person's knowledge.

(10) A copy of written communications and the substance of verbal communications, if any, between the claimant and the responsible party or guarantor of the source designated under § 136.305 and a statement indicating that the claim was presented to the responsible party or guarantor, the date it was presented, that it was denied or remains not settled and, if known, the reason why it was denied or remains not settled.

(11) If the claimant has insurance which may cover the removal costs or

damages claimed, the information required under §136.111.

(12) A statement by the claimant that no action has been commenced in court against the responsible party or guarantor of the source designated under §136.305 or, if an action has been commenced, a statement identifying the claimant's attorney and the attorney's address and phone number, the civil action number, and the court in which the action is pending.

(13) In the discretion of the Director, NPFC, any other information deemed relevant and necessary to properly process the claim for payment.

§136.107 Subrogated claims.

(a) The claims of subrogor (e.g., insured) and subrogee (e.g., insurer) for removal costs and damages arising out of the same incident should be presented together and must be signed by all claimants.

(b) A fully subrogated claim is payable only to the subrogee.

(c) A subrogee must support a claim in the same manner as any other claimant.

§136.109 Removal costs and multiple items of damages.

(a) A claimant must specify all of the claimant's known removal costs or damages arising out of a single incident when submitting a claim.

(b) Removal costs and each separate category of damages (as described in subpart C of this part) must be separately listed with a sum certain attributed to each type and category listed.

(c) At the sole discretion of the Director, NPFC, removal costs and each separate category of damages may be treated separately for settlement purposes.

§136.111 Insurance.

(a) A claimant shall provide the following information concerning any insurance which may cover the removal costs or damages for which compensation is claimed:

(1) The name and address of each insurer.

(2) The kind and amount of coverage.

(3) The policy number.

(4) Whether a claim has been or will be presented to an insurer and, if so, the amount of the claim and the name of the insurer.

(5) Whether any insurer has paid the claim in full or in part or has indicated whether or not payment will be made.

(b) If requested by the Director, NPFC, the claimant shall provide a copy of the following material:

(1) All insurance policies or indemnification agreements.

(2) All written communications, and a summary of all oral communications, with any insurer or indemnifier.

(c) A claimant shall advise the Director, NPFC, of any changes in the information provided under this section.

§136.113 Other compensation.

A claimant must include an accounting, including the source and value, of all other compensation received, applied for, or potentially available as a consequence of the incident out of which the claim arises including, but not limited to, monetary payments, goods or services, or other benefits.

§136.115 Settlement and notice to claimant.

(a) Payment in full, or acceptance by the claimant of an offer of settlement by the Fund, is final and conclusive for all purposes and, upon payment, constitutes a release of the Fund for the claim. In addition, acceptance of any compensation from the Fund precludes the claimant from filing any subsequent action against any person to recover costs or damages which are the subject of the compensated claim. Acceptance of any compensation also constitutes an agreement by the claimant to assign to the Fund any rights, claims, and causes of action the claimant has against any person for the costs and damages which are the subject of the compensated claims and to cooperate reasonably with the Fund in any claim or action by the Fund against any person to recover the amounts paid by the Fund. The cooperation shall include, but is not limited to, immediately reimbursing the Fund for any compensation received from any other source for the same costs and damages and providing any documentation, evidence, testimony, and other support, as may be necessary

for the Fund to recover from any person.

(b) Claimant's failure to accept an offer of settlement within 60 days after the date the offer was mailed to the claimant automatically voids the offer. The Director, NPFC, reserves the right to revoke an offer at any time.

(c) A claimant will be notified in writing sent by certified or registered mail whenever a claim against the Fund is denied. The failure of the Director, NPFC, to make final disposition of a claim within six months after it is filed shall, at the option of the claimant any time thereafter, be deemed a final denial of the claim.

(d) The Director, NPFC, upon written request of the claimant or of a person duly authorized to act on the claimant's behalf, reconsiders any claim denied. The request for reconsideration must be in writing and include the factual or legal grounds for the relief requested, providing any additional support for the claim. The request must be received by the Director, NPFC, within 60 days after the date the denial was mailed to the claimant or within 30 days after receipt of the denial by the claimant, whichever date is earlier. Reconsideration may only be requested once for each claim denied. The Director, NPFC will provide the claimant seeking reconsideration with written notification of the decision within 90 days after receipt of the request for reconsideration. This written decision is final. The failure of the Director, NPFC, to make final disposition of a reconsideration within 90 days after it is received shall, at the option of the claimant any time thereafter, be deemed a final denial of the reconsideration.

Subpart C—Procedures for Particular Claims

REMOVAL COSTS

§ 136.201 Authorized claimants.

A claim for removal costs may be presented by any claimant.

§ 136.203 Proof.

In addition to the requirements of Subparts A and B of this part, a claimant must establish—

(a) That the actions taken were necessary to prevent, minimize, or mitigate the effects of the incident;

(b) That the removal costs were incurred as a result of these actions;

(c) That the actions taken were determined by the FOSC to be consistent with the National Contingency Plan or were directed by the FOSC.

§ 136.205 Compensation allowable.

The amount of compensation allowable is the total of uncompensated reasonable removal costs of actions taken that were determined by the FOSC to be consistent with the National Contingency Plan or were directed by the FOSC. Except in exceptional circumstances, removal activities for which costs are being claimed must have been coordinated with the FOSC.

NATURAL RESOURCES

§ 136.207 Authorized claimants.

(a) Claims for uncompensated natural resource damages may be presented by an appropriate natural resources trustee. However, in order to facilitate the processing of these claims with respect to a single incident where multiple trustees are involved and to prevent double recovery, the affected trustees should select a lead administrative trustee who will present consolidated claims on behalf of the trustees.

(b) A trustee may present a claim for the reasonable cost of assessing natural resources damages separately from a claim for the cost of developing and implementing plans for the restoration, rehabilitation, replacement, or acquisition of the equivalent of the natural resources damaged.

§ 136.209 Proof.

In addition to the requirements of subparts A and B of this part, a trustee must do the following:

(a) Submit the assessment and restoration plans which form the basis of the claim.

(b) Provide documented costs and cost estimates for the claim. Final cost estimates for conducting damage assessments or implementing a restoration plan may form the basis for a

claim against the Fund for an uncompensated natural resources damage claim.

(c) Identify all trustees who may be potential claimants for the same natural resources damaged.

(d) Certify the accuracy and integrity of any claim submitted to the Fund, and certify that any actions taken or proposed were or will be conducted in accordance with the Act and consistent with all applicable laws and regulations.

(e) Certify whether the assessment was conducted in accordance with applicable provisions of the natural resources damage assessment regulations promulgated under section 1006(e)(1) of the Act (33 U.S.C. 2706(e)(1)). Identify any other or additional damage assessment regulations or methodology utilized.

(f) Certify that, to the best of the trustee's knowledge and belief, no other trustee has the right to present a claim for the same natural resources damages and that payment of any subpart of the claim presented would not constitute a double recovery for the same natural resources damages.

§ 136.211 Compensation allowable.

(a) The amount of compensation allowable is the reasonable cost of assessing damages, and the cost of restoring, rehabilitating, replacing, or acquiring the equivalent of the damaged natural resources.

(b) In addition to any other provision of law respecting the use of sums recovered for natural resources damages, trustees shall reimburse the Fund for any amounts received from the Fund in excess of that amount required to accomplish the activities for which the claim was paid.

REAL OR PERSONAL PROPERTY

§ 136.213 Authorized claimants.

(a) A claim for injury to, or economic losses resulting from the destruction of, real or personal property may be presented only by a claimant either owning or leasing the property.

(b) Any claim for loss of profits or impairment of earning capacity due to injury to, destruction of, or loss of real or personal property must be included as subpart of the claim under this section and must include the proof required under § 136.233.

§ 136.215 Proof.

(a) In addition to the requirements of subparts A and B of this part, a claimant must establish—

(1) An ownership or leasehold interest in the property;

(2) That the property was injured or destroyed;

(3) The cost of repair or replacement; and

(4) The value of the property both before and after injury occurred.

(b) In addition, for each claim for economic loss resulting from destruction of real or personal property, the claimant must establish—

(1) That the property was not available for use and, if it had been, the value of that use;

(2) Whether or not substitute property was available and, if used, the costs thereof; and

(3) That the economic loss claimed was incurred as the result of the injury to or destruction of the property.

§ 136.217 Compensation allowable.

(a) The amount of compensation allowable for damaged property is the lesser of—

(1) Actual or estimated net cost of repairs necessary to restore the property to substantially the same condition which existed immediately before the damage;

(2) The difference between value of the property before and after the damage; or

(3) The replacement value.

(b) Compensation for economic loss resulting from the destruction of real or personal property may be allowed in an amount equal to the reasonable costs actually incurred for use of substitute commercial property or, if substitute commercial property was not reasonably available, in an amount equal to the net economic loss which resulted from not having use of the property. When substitute commercial property was reasonably available, but not used, allowable compensation for loss of use is limited to the cost of the substitute commercial property, or the

property lost, whichever is less. Compensation for loss of use of noncommercial property is not allowable.

(c) Compensation for a claim for loss of profits or impairment of earning capacity under § 136.213(b) is limited to that allowable under § 136.235.

SUBSISTENCE USE

§ 136.219 Authorized claimants.

(a) A claim for loss of subsistence use of natural resources may be presented only by a claimant who actually uses, for subsistence, the natural resources which have been injured, destroyed, or lost, without regard to the ownership or management of the resources.

(b) A claim for loss of profits or impairment of earning capacity due to loss of subsistence use of natural resources must be included as part of the claim under this section and must include the proof required under § 136.233.

§ 136.221 Proof.

In addition to the requirements of subparts A and B of this part, a claimant must provide—

(a) The identification of each specific natural resource for which compensation for loss of subsistence use is claimed;

(b) A description of the actual subsistence use made of each specific natural resource by the claimant;

(c) A description of how and to what extent the claimant's subsistence use was affected by the injury to or loss of each specific natural resource;

(d) A description of each effort made by the claimant to mitigate the claimant's loss of subsistence use; and

(e) A description of each alternative source or means of subsistence available to the claimant during the period of time for which loss of subsistence is claimed, and any compensation available to the claimant for loss of subsistence.

§ 136.223 Compensation allowable.

(a) The amount of compensation allowable is the reasonable replacement cost of the subsistence loss suffered by the claimant if, during the period of time for which the loss of subsistence is claimed, there was no alternative source or means of subsistence available.

(b) The amount of compensation allowable under paragraph (a) of this section must be reduced by—

(1) All compensation made available to the claimant to compensate for subsistence loss;

(2) All income which was derived by utilizing the time which otherwise would have been used to obtain natural resources for subsistence use; and

(3) Overheads or other normal expenses of subsistence use not incurred as a result of the incident.

(c) Compensation for a claim for loss of profits or impairment of earning capacity under § 136.219(b) is limited to that allowable under § 136.235.

GOVERNMENT REVENUES

§ 136.225 Authorized claimants.

A claim for net loss of revenue due to the injury, destruction, or loss of real property, personal property, or natural resources may be presented only by an appropriate claimant sustaining the loss. As used in this section and § 136.277, ''revenue'' means taxes, royalties, rents, fees, and net profit shares.

§ 136.227 Proof.

In addition to the requirements of Subparts A and B, a claimant must establish—

(a) The identification and description of the economic loss for which compensation is claimed, including the applicable authority, property affected, method of assessment, rate, and method and dates of collection;

(b) That the loss of revenue was due to the injury to, destruction of, or loss of real or personal property or natural resources;

(c) The total assessment or revenue collected for comparable revenue periods; and

(d) The net loss of revenue.

§ 136.229 Compensation allowable.

The amount of compensation allowable is the total net revenue actually lost.

PROFITS AND EARNING CAPACITY

§ 136.231 Authorized claimants.

(a) A claim for loss of profits or impairment of earning capacity due to the injury to, destruction of, or loss of real or personal property or natural resources may be presented by a claimant sustaining the loss or impairment. The claimant need not be the owner of the damaged property or resources to recover for lost profits or income.

(b) A claim for loss of profits or impairment of earning capacity that also involves a claim for injury to, or economic losses resulting from destruction of, real or personal property must be claimed under § 136.213.

(c) A claim for loss of profits or impairment of earning capacity that also involves a claim for loss of subsistence use of natural resources must be claimed under § 136.219.

§ 136.233 Proof.

In addition to the requirements of subparts A and B of this part, a claimant must establish the following:

(a) That real or personal property or natural resources have been injured, destroyed, or lost.

(b) That the claimant's income was reduced as a consequence of injury to, destruction of, or loss of the property or natural resources, and the amount of that reduction.

(c) The amount of the claimant's profits or earnings in comparable periods and during the period when the claimed loss or impairment was suffered, as established by income tax returns, financial statements, and similar documents. In addition, comparative figures for profits or earnings for the same or similar activities outside of the area affected by the incident also must be established.

(d) Whether alternative employment or business was available and undertaken and, if so, the amount of income received. All income that a claimant received as a result of the incident must be clearly indicated and any saved overhead and other normal expenses not incurred as a result of the incident must be established.

§ 136.235 Compensation allowable.

The amount of compensation allowable is limited to the actual net reduction or loss of earnings or profits suffered. Calculations for net reductions or losses must clearly reflect adjustments for—

(a) All income resulting from the incident;

(b) All income from alternative employment or business undertaken;

(c) Potential income from alternative employment or business not undertaken, but reasonably available;

(d) Any saved overhead or normal expenses not incurred as a result of the incident; and

(e) State, local, and Federal taxes.

GOVERNMENT PUBLIC SERVICES

§ 136.237 Authorized claimants.

A claim for net costs of providing increased or additional public services during or after removal activities, including protection from fire, safety, or health hazards, caused by a discharge of oil may be presented only by a State or a political subdivision of a State incurring the costs.

§ 136.239 Proof.

In addition to the requirements of subparts A and B of this part, a claimant must establish—

(a) The nature of the specific public services provided and the need for those services;

(b) That the services occurred during or after removal activities;

(c) That the services were provided as a result of a discharge of oil and would not otherwise have been provided; and

(d) The net cost for the services and the methods used to compute those costs.

§ 136.241 Compensation allowable.

The amount of compensation allowable is the net cost of the increased or additional service provided by the State or political subdivision.

Subpart D—Designation of Source and Advertisement

GENERAL

§ 136.301 Purpose.

This subpart prescribes the requirements concerning designation of the source or sources of the discharge or threat of discharge and advertisement of these designations, including the procedures by which claims may be presented to the responsible party or guarantor.

§ 136.303 Definitions.

As used in this subpart—

Advertisement means the dissemination of information, including but not limited to paid advertisements, that are reasonably calculated to advise the public how to present a claim.

Designated source means a source designated under § 136.305.

DESIGNATION OF SOURCE

§ 136.305 Notice of designation.

(a) When information of an incident is received, the source or sources of the discharge or threat are designated, where possible and appropriate. If the designated source is a vessel or facility, the responsible party and the guarantor, if known, are notified by telephone, telefax, or other rapid means of that designation. The designation will be confirmed by a written Notice of Designation.

(b) A Notice of Designation normally contains, to the extent known—

(1) The name of the vessel or facility designated as the source;

(2) The location, date, and time of the incident;

(3) The type of quantity of oil involved;

(4) The date of the designation;

(5) The procedures for accepting or denying the designation; and

(6) The name, address, telephone number, and, if available, telefax number of the responsible Federal official to whom further communication regrading the incident, advertisement of the incident, or denial of designation should be directed.

§ 136.307 Denial of designation.

(a) Within five days after receiving a Notice of Designation under § 136.305, the responsible party or guarantor may deny the designation.

(b) A denial of designation must—

(1) Be in writing;

(2) Identify the Notice of Designation;

(3) Give the reasons for the denial and provide a copy of all supporting documents; and

(4) Be submitted to the official named in the Notice of Designation.

(c) A denial is deemed received on the date the denial is actually received by the official named in the Notice of Designation.

ADVERTISEMENT

§ 136.309 Advertisement determinations.

(a) The Director, NPFC, determines for each incident the type, geographic scope, frequency, and duration of advertisement required.

(b) In making the determination specified in paragraph (a) of this section, the Director, NPFC, may consider—

(1) The nature and extent of economic losses that have occurred or are likely to occur;

(2) The potential claimants who are likely to incur economic losses;

(3) The geographical area that is or will likely be affected;

(4) The most effective method of reasonably notifying potential claimants of the designation and procedures of submitting claims; and

(5) Relevant information or recommendations, if any, submitted by, or on behalf of, the responsible party or guarantor of the designated source.

(c) The Director, NPFC, provides the specific requirements for advertisement for each incident to the responsible party or guarantor of the designated source.

(d) If a responsible party or guarantor has not denied designation in accordance with § 136.307, the party or guarantor shall advertise, in accordance with the requirements of this subpart, the designation and the procedures by which claims may be presented. The advertisement must begin

not later than 15 days after the date of the designation made under §136.305.

(e) If there is no designation under §136.305, if the source of the discharge or threat is a public vessel, or if the responsible party and guarantor of the source designated have denied the designation or failed to meet the requirements for advertisement in this section, the Director, NPFC, may advertise procedures for presenting claims.

§136.311 Types of advertisement.

Advertisement required by the Director, NPFC, will normally include one or more of the following:

(a) Paid advertisements in a newspaper or newspapers having general circulation in the area designated by the Director, NPFC.

(b) Notice posted in marinas, marine supply stores, bait and tackle shops, and other appropriate business establishments or public facilities in the area designated by the Director, NPFC.

(c) News releases to newspapers, radio stations, television stations, and cable services having general circulation in the area designated by the Director, NPFC.

(d) Other means approved by the Director, NPFC, under the circumstances of each case.

§136.313 Content of advertisement.

Each advertisement required by this subpart may be required to contain the following information or to indicate where this information may be contained:

(a) Location, date, and time of the incident.

(b) Geographical area affected, as determined by the FOSC or Director, NPFC.

(c) Type and quantity of oil involved.

(d) Name or other description of the source designated by the FOSC or Director, NPFC.

(e) Name of the responsible party and guarantor of the designated source.

(f) Name, address, telephone number, office hours, and work days of the person or persons to whom claims are to be presented and from whom claim information can be obtained.

(g) The procedures by which a claim may be presented.

(h) Other information required by the Director, NPFC, under the circumstances of each case.

PART 138—FINANCIAL RESPONSIBILITY FOR WATER POLLUTION (VESSELS)

Sec.
138.10 Scope.
138.12 Applicability.
138.15 Implementation schedule.
138.20 Definitions.
138.30 General.
138.40 Where to apply for and obtain forms.
138.50 Time to apply.
138.60 Applications, general instructions.
138.65 Issuance and carriage of Certificates.
138.70 Renewal of Certificates.
138.80 Financial responsibility, how established.
138.90 Individual and Fleet Certificates.
138.100 Non-owning operator's responsibility for identification.
138.110 Master Certificates.
138.120 Certificates, denial or revocation.
138.130 Fees.
138.140 Enforcement.
138.150 Service of process.

APPENDIX A TO PART 138—APPLICATION FORM.
APPENDIX B TO PART 138—INSURANCE GUARANTY FORM
APPENDIX C TO PART 138—MASTER INSURANCE GUARANTY FORM
APPENDIX D TO PART 138—SURETY BOND GUARANTY FORM
APPENDIX E TO PART 138—FINANCIAL GUARANTY FORM
APPENDIX F TO PART 138—MASTER FINANCIAL GUARANTY FORM

AUTHORITY: 33 U.S.C. 2716, 2716a; 42 U.S.C. 9608, 9609; sec. 7(b), E.O. 12580, 3 CFR, 1987 Comp., p. 198; E.O. 12777, 3 CFR 1991 Comp., p. 351; 49 CFR 1.46.

Section 138.30 also issued under the authority of 46 U.S.C. 2103, 14302.

SOURCE: CGD 91–005, 59 FR 34227, July 1, 1994, unless otherwise noted.

§138.10 Scope.

This part sets forth the procedures by which an operator of a vessel may establish and maintain, for itself, and, where the operator is not the owner or demise charterer, for the owner and demise charterer of the vessel, evidence of financial responsibility to cover liability of the owner, operator, and demise charterer arising under—

(a) Section 1002 of the Oil Pollution Act of 1990 (OPA 90) (33 U.S.C. 2702); and

(b) Section 107(a)(1) of the Comprehensive Environmental Response, Compensation, and Liability Act, as amended (CERCLA) (42 U.S.C. 9607(a)(1)).

[CGD 91–005, 59 FR 34227, July 1, 1994, as amended by CGD 91–005, 61 FR 9274, Mar. 7, 1996]

§ 138.12 Applicability.

(a) This part applies to—

(1) A tank vessel of any size, and to a foreign-flag vessel of any size, using the waters of the exclusive economic zone to transship or lighter oil (whether delivering or receiving) destined for a place subject to the jurisdiction of the United States; and

(2) A vessel using the navigable waters of the United States or any port or place subject to the jurisdiction of the United States, including an offshore facility subject to the jurisdiction of the United States, except—

(i) A vessel that is 300 gross tons or less; and

(ii) A non-self-propelled barge that does not carry oil as cargo or fuel and does not carry hazardous substances as cargo.

(b) For the purposes of financial responsibility under OPA 90, a mobile offshore drilling unit is treated as a tank vessel when it is being used as an offshore facility and there is a discharge, or a substantial threat of a discharge, of oil on or above the surface of the water. A mobile offshore drilling unit is treated as a vessel other than a tank vessel when it is not being used as an offshore facility.

(c) In addition to a non-self-propelled barge over 300 gross tons that carries hazardous substances as cargo, for the purposes of financial responsibility under CERCLA, this part applies to a self-propelled vessel over 300 gross tons, even if it does not carry hazardous substances.

(d) This part does not apply to a public vessel.

[CGD 91–005, 59 FR 34227, July 1, 1994, as amended at 61 FR 9274, Mar. 7, 1996]

§ 138.15 Implementation schedule.

(a) A tank vessel is subject to the following implementation schedule:

(1) Until December 28, 1994, a tank vessel is required to carry a Certificate issued under parts 130, 131, and 132 of this chapter, as may be applicable to that vessel. On or after that date, and until July 1, 1995, a non-self-propelled tank vessel must carry a Certificate issued under parts 130, 131, and 132 of this chapter, as may be applicable to that vessel, unless it carries a Certificate issued under this part.

(2) A self-propelled tank vessel to which this part applies and which carries a valid Certificate issued under part 130 of this chapter may not operate on or after December 28, 1994, unless the operator of that vessel has submitted to the Director, NPFC, before that date acceptable evidence of financial responsibility applicable to that vessel under this part. A self-propelled tank vessel covered by that evidence of financial responsibility before December 28, 1994, may continue to operate with the Certificate issued under part 130 of this chapter. The expiration date of the Certificate issued under part 130 of this chapter for that vessel will be deemed to be December 28, 1995, regardless of the expiration date appearing on the Certificate. Thereafter, a Certificate issued under this part is required.

(3) A self-propelled tank vessel to which this part applies, but which does not carry a valid Certificate issued under part 130 of this chapter before December 28, 1994, may not operate on or after that date unless it carries a Certificate under this part.

(4) A non-self-propelled tank vessel to which this part applies may not operate on or after July 1, 1995, without a Certificate issued under this part. A non-self-propelled tank vessel may continue to operate with a Certificate issued under parts 130, 131, and 132 of this chapter, as may be applicable to that vessel, until that date.

(b) A vessel that is not a tank vessel (non-tank vessel) is subject to the following implementation schedule:

(1) Until December 28, 1997, a non-tank vessel is required to carry a Certificate issued under parts 130 and 132 of this chapter, as may be applicable to that vessel, unless that vessel carries a Certificate issued under this part. On or after December 28, 1997, each non-tank vessel subject to this part must carry a Certificate issued under this part.

(2) A Certificate is issued, on and after December 28, 1994, and before December 28, 1997, under parts 130 and 132 of this chapter only to replace a lost Certificate or to replace a Certificate due to a vessel or operator name change (a change of legal identity, such as reincorporation or other reorganization, is not considered a name change). The expiration date that will appear on the replacement Certificate will be the same as the expiration date of the Certificate being replaced. During that three-year time period, with respect to part 132 of this chapter, the expiration date that will appear on a Certificate being replaced, or on an existing Certificate being renewed, will be adjusted to coincide with the expiration date of the Certificate, if any, for that vessel issued under part 130 of this chapter.

(3) A non-tank vessel that has a Certificate issued before December 28, 1994, under part 130 of this chapter is not required to carry a Certificate under this part until the date of expiration of the Certificate issued under part 130 of this chapter.

(4) Except as provided in paragraph (b)(5) of this section, a Certificate issued on and after July 1, 1994, and before December 28, 1994, under parts 130 and 132 of this chapter is issued with an expiration date three years from the date of issuance.

(5) If a Certificate issued under part 130 of this chapter with an expiration date of December 28, 1994, or later is surrendered, and a new Certificate is requested for the same non-tank vessel before December 28, 1994, the new Certificate will have the same expiration date as that of the surrendered Certificate.

(c) On or after July 1, 1994, a vessel that is subject to either part 131 or 132, or both, of this chapter but that is not subject to part 130 of this chapter because the vessel is 300 gross tons or less is not required to comply with part 131 or 132 of this chapter, unless that vessel is subject to this part under §138.12(a)(1).

§138.20 Definitions.

(a) As used in this part (including the appendices to this part), the following terms have the same meaning as set forth in—

(1) Section 1001 of the Oil Pollution Act of 1990 (33 U.S.C. 2701), respecting the financial responsibility referred to in §138.10(b)(1): *claimant, damages, discharge, exclusive economic zone, navigable waters, mobile offshore drilling unit, natural resources, offshore facility, oil, person, remove, removal, removal costs,* and *United States;* and

(2) Section 101 of the Comprehensive Environmental Response, Compensation, and Liability Act (42 U.S.C. 9601), respecting the financial responsibility referred to in §138.10(b)(2): *claimant, damages, environment, hazardous substance, navigable waters, natural resources, person, release, remove, removal,* and *United States.*

(b) As used in this part (including the appendices to this part)—

Acts means OPA 90 and CERCLA.

Applicant means an operator who has applied for a Certificate or for the renewal of a Certificate under this part.

Application means ''Application for Vessel Certificate of Financial Responsibility (Water Pollution)'', as illustrated in Appendix A of this part.

Cargo means goods or materials on board a vessel for purposes of transportation, whether proprietary or nonproprietary. A hazardous substance or oil carried solely for use aboard the carrying vessel is not ''cargo''.

CERCLA means title I of the Comprehensive Environmental Response, Compensation, and Liability Act, as amended (42 U.S.C. 9601 *et seq.*).

Certificant means an operator who has been issued a Certificate under this part.

Certificate means a ''Vessel Certificate of Financial Responsibility (Water Pollution)'' issued under this part, unless otherwise indicated.

Director, NPFC, means the head of the U.S. Coast Guard National Pollution Funds Center (NPFC).

Financial responsibility means statutorily required financial ability to meet liability under the Acts.

Fish tender vessel and fishing vessel have the same meaning as set forth in 46 U.S.C. 2101.

Fuel means any oil or hazardous substance used or capable of being used to produce heat or power by burning, including power to operate equipment. A hand-carried pump with not more than

five gallons of fuel capacity, that is neither integral to nor regularly stored aboard a non-self-propelled barge, is not equipment.

Guarantor means any person who provides evidence of financial responsibility, under the Acts, on behalf of a vessel owner, operator, and demise charterer. A vessel operator who can qualify as a self-insurer may act as both a self-insurer of vessels it operates and as a financial guarantor of other vessels, under § 138.80(b)(4).

Hazardous material means a liquid material or substance that is—

(1) Flammable or combustible;

(2) Designated a hazardous substance under section 311(b) of the Federal Water Pollution Control Act (33 U.S.C. 1221); or

(3) Designated a hazardous material under section 104 of the Hazardous Material Transportation Act (49 App. U.S.C. 1803).

Incident means any occurrence or series of occurrences having the same origin, involving one or more vessels, facilities, or any combination thereof, resulting in the discharge or substantial threat of discharge of oil into or upon the navigable waters or adjoining shorelines or the exclusive economic zone.

Insurer is a type of guarantor and means one or more insurance companies, associations of underwriters, shipowners' protection and indemnity associations, or other persons, each of which must be acceptable to the Coast Guard.

Master Certificate means a Certificate issued under this part to a person acting as vessel operator in its capacity as a builder, repairer, scrapper, or seller of vessels.

Offshore supply vessel has the same meaning as set forth in 46 U.S.C. 2101.

OPA 90 means title I of the Oil Pollution Act of 1990 (33 U.S.C. 2701 *et seq.*).

Operator means a person who is an owner, a demise charterer, or other contractor, who conducts the operation of, or who is responsible for the operation of, a vessel. A builder, repairer, scrapper, lessor, or seller who is responsible, or who agrees by contract to become responsible, for a vessel is an operator.

Owner means any person holding legal or equitable title to a vessel. In a case where a Certificate of Documentation or equivalent document has been issued, the owner is considered to be the person or persons whose name or names appear thereon as owner. For purposes of CERCLA only, ''owner'' does not include a person who, without participating in the management of a vessel, holds indicia of ownership primarily to protect the owner's security interest in the vessel.

Public vessel means a vessel

Owned or bareboat chartered by the United States, or by a State or political subdivision thereof, or by a foreign nation, except when the vessel is engaged in commerce.

Self-elevating lift vessel means a vessel with movable legs capable of raising its hull above the surface of the sea and that is an offshore work boat (such as a work barge) that does not engage in drilling operations.

Tank vessel means a vessel (other than an offshore supply vessel, a fishing or fish tender vessel of 750 gross tons or less that transfers fuel without charge to a fishing vessel owned by the same person, or a towing or pushing vessel (tug) simply because it has in its custody a tank barge) that is constructed or adapted to carry, or that carries, oil or liquid hazardous material in bulk as cargo or cargo residue, and that—

(1) Is a vessel of the United States;

(2) Operates on the navigable waters; or

(3) Transfers oil or hazardous material in a place subject to the jurisdiction of the United States.

Total Applicable Amount means the amount determined under § 138.80(f)(3).

Vessel means every description of watercraft or other artificial contrivance used, or capable of being used, as a means of transportation on water.

[CGD 91–005, 59 FR 34227, July 1, 1994, as amended by CGD 91–005, 61 FR 9274, Mar. 7, 1996]

§ 138.30 General.

(a) The regulations in this part set forth the procedures whereby an operator of a vessel subject to this part can demonstrate that it and the owner and

demise charterer of the vessel are financially able to meet potential liability for costs and damages in the amounts established by this part. The owner, operator, and demise charterer are strictly, jointly, and severally liable for the costs and damages resulting from an incident or a release or threatened release, but together they need only establish and maintain an amount of financial responsibility equal to the single limit of liability per incident, release, or threatened release. Only that portion of the evidence of financial responsibility under this part with respect to—

(1) OPA 90 is required to be made available by a guarantor for the costs and damages related to an incident where there is not also a release or threatened release; and

(2) CERCLA is required to be made available by a guarantor for the costs and damages related to a release or threatened release where there is not also an incident. A guarantor (or a self-insurer for whom the exceptions to limitations of liability are not applicable), therefore, is not required to apply the entire amount of financial responsibility to an incident involving oil alone or a release or threatened release involving a hazardous substance alone.

(b) Where a vessel is operated by its owner, or the owner is responsible for its operation, the owner is considered to be the operator and shall submit the application for a Certificate. In all other cases, the vessel operator shall submit the application. A time or voyage charterer that does not assume responsibility for the operation of the vessel is not considered an operator for the purposes of this part.

(c) For a United States-flag vessel, the applicable gross tons or gross tonnage, as referred to in this part, is determined as follows:

(1) *For a documented U.S. vessel measured under both 46 U.S.C. Chapters 143 (Convention Measurement) and 145 (Regulatory Measurement).* The vessel's regulatory gross tonnage is used to determine whether the vessel exceeds 300 gross tons where that threshold applies under the Acts. If the vessel's regulatory tonnage is determined under the Dual Measurement System in 46 CFR part 69, subpart D, the higher gross tonnage is the regulatory tonnage for the purposes of the 300 gross ton threshold. The vessel's gross tonnage as measured under the International Convention on Tonnage Measurement of Ships, 1969 (''Convention''), is used to determine the vessel's required amount of financial responsibility, and limit of liability under section 1004(a) of OPA 90 and under section 107(a) of CERCLA.

(2) *For all other United States vessels.* The vessel's gross tonnage under 46 CFR part 69 is used for determining both the 300 gross ton threshold, the required amount of financial responsibility, and limit of liability under section 1004(a) of OPA 90 and under section 107(a) of CERCLA. If the vessel is measured under the Dual Measurement System, the higher gross tonnage is used in all determinations.

(d) For a vessel of a foreign country that is a party to the Convention, gross tonnage, as referred to in this part, is determined as follows:

(1) *For a vessel assigned, or presently required to be assigned, gross tonnage under Annex I of the Convention.* The vessel's gross tonnage as measured under Annex I of the Convention is used for determining the 300 gross ton threshold, if applicable, the required amount of financial responsibility, and limit of liability under section 1004(a) of OPA 90 and under section 107(a) of CERCLA.

(2) *For a vessel not presently required to be assigned gross tonnage under Annex I of the Convention.* The highest gross tonnage that appears on the vessel's certificate of documentation or equivalent document and that is acceptable to the Coast Guard under 46 U.S.C. chapter 143 is used for determining the 300 gross ton threshold, if applicable, the required amount of financial responsibility, and limit of liability under section 1004(a) of OPA 90 and under section 107(a) of CERCLA. If the vessel has no document or the gross tonnage appearing on the document is not acceptable under 46 U.S.C. chapter 143, the vessel's gross tonnage is determined by applying the Convention Measurement System under 46 CFR part 69, subpart B, or if applicable, the Simplified Measurement System under

46 CFR part 69, subpart E. The measurement standards applied are subject to applicable international agreements to which the United States Government is a party.

(e) For a vessel of a foreign country that is not a party to the Convention, gross tonnage, as referred to in this part, is determined as follows:

(1) *For a vessel measured under laws and regulations found by the Commandant to be similar to Annex I of the Convention.* The vessel's gross tonnage under the similar laws and regulations is used for determining the 300 gross ton threshold, if applicable, the required amount of financial responsibility, and limit of liability under section 1004(a) of OPA 90 and under section 107(a) of CERCLA. The measurement standards applied are subject to applicable international agreements to which the United States Government is a party.

(2) *For a vessel not measured under laws and regulations found by the Commandant to be similar to Annex I of the Convention.* The vessel's gross tonnage under 46 CFR part 69, subpart B, or, if applicable, subpart E, is used for determining the 300 gross ton threshold, if applicable, the required amount of financial responsibility, and limit of liability under section 1004(a) of OPA 90 and under section 107(a) of CERCLA. The measurement standards applied are subject to applicable international agreements to which the United States is a party.

(f) A person who agrees to act as a guarantor or a self-insurer is bound by the vessel's gross tonnage as determined under paragraphs (c), (d), or (e) of this section, regardless of what gross tonnage is specified in an application or guaranty form illustrated in the appendices to this part. Guarantors, however, may limit their liability under a guaranty of financial responsibility to the applicable gross tonnage appearing on a vessel's International Tonnage Certificate or other official, applicable certificate of measurement and shall not incur any greater liability with respect to that guaranty, except when the guarantors knew or should have known that the applicable tonnage certificate was incorrect.

§ 138.40 Where to apply for and obtain forms.

(a) An operator shall file an application for a Certificate and a renewal of a Certificate together with fees and evidence of financial responsibility, with the Coast Guard National Pollution Funds Center at the following address: U.S. Coast Guard, National Pollution Funds Center (cv), 4200 Wilson Boulevard, Suite 1000, Arlington, VA 22203–1804, telephone (202) 493–6780, Telefax (202) 493–6781.

(b) Forms may be obtained at the address in paragraph (a) of this section, and all requests for assistance, including telephone inquiries, in completing applications should be directed to the U.S. Coast Guard at that same address.

[CGD 91–005, 59 FR 34227, July 1, 1994, as amended by USCG–1999–5832, 64 FR 34714, June 29, 1999]

§ 138.50 Time to apply.

(a) A vessel operator who wishes to obtain a Certificate shall file a completed application form, evidence of financial responsibility and appropriate fees at least 21 days prior to the date the Certificate is required. The Director, NPFC, may waive this 21-day requirement.

(b) The Director, NPFC, generally processes applications in the order in which they are received at the National Pollution Funds Center.

§ 138.60 Applications, general instructions.

(a) The application for a Certificate (Form CG–5585) is illustrated in Appendix A of this part. An application and all supporting documents must be in English. All monetary terms must be expressed in United States dollars.

(b) An authorized official of the applicant shall sign the application. The title of the signer must be shown in the space provided on the application.

(c) The application must be accompanied by a written statement providing authority to sign, where the signer is not disclosed as an individual (sole proprietor) applicant, a partner in a partnership applicant, or a director, chief executive officer, or any other duly authorized officer of a corporate applicant.

(d) If, before the issuance of a Certificate, the applicant becomes aware of a change in any of the facts contained in the application or supporting documentation, the applicant shall, within five business days of becoming aware of the change, notify the Director, NPFC, in writing, of the change.

§138.65 Issuance and carriage of Certificates.

Upon the satisfactory demonstration of financial responsibility and payment of fees, the Director, NPFC, issues a Vessel Certificate of Financial Responsibility (Water Pollution), the original of which (except as provided in §§138.90 (a) and (b) and 138.110(f)) is to be carried aboard the vessel covered by the Certificate. The carriage of a valid Certificate or authorized copy indicates compliance with these regulations. Failure to carry a valid Certificate or authorized copy subjects the vessel to enforcement action, except where a Certificate is removed temporarily from a vessel for inspection by a United States Government official.

§138.70 Renewal of Certificates.

(a) An operator shall file a written application for the renewal of a Certificate at least 21 days, but not earlier than 90 days, before the expiration date of the Certificate. Except as provided in paragraph (c) of this section, a letter may be used for this purpose. The Director, NPFC, may waive this 21-day requirement.

(b) The applicant shall identify in the renewal application any changes which have occurred since the original application for a Certificate was filed, and set forth the correct information in full.

(c) An applicant that applies for the first time for a Certificate issued under this part to replace a Certificate issued under part 130 of this chapter shall submit an application form illustrated in Appendix A of this part. An applicant is not required to pay an application fee under §138.130(c) for this first-time application.

§138.80 Financial responsibility, how established.

(a) *General.* In addition to submitting an application and fees, an applicant shall submit, or cause to be submitted, evidence of financial responsibility in an amount determined under §138.80(f). A guarantor may submit directly to the Director, NPFC, the evidence of financial responsibility.

(b) *Methods.* An applicant shall establish evidence of financial responsibility by one or more of the following methods:

(1) *Insurance.* By filing with the Director, NPFC, an insurance guaranty form CG–5586, illustrated in Appendix B of this part (or, when applying for a Master Certificate, a master insurance guaranty form CG–5586–1, illustrated in Appendix C of this part), executed by not more than four insurers that have been found acceptable by and remain acceptable to the Director, NPFC, for purposes of this part.

(2) *Surety bond.* By filing with the Director, NPFC, a surety bond guaranty form CG–5586–2, illustrated in Appendix D of this part, executed by not more than 10 acceptable surety companies certified by the United States Department of the Treasury with respect to the issuance of Federal bonds in the maximum penal sum of each bond to be issued under this part.

(3) *Self-insurance.* By filing the financial statements specified in paragraph (b)(3)(i) of this section for the applicant's last fiscal year preceding the date of application and by demonstrating that the applicant maintains, in the United States, working capital and net worth each in amounts equal to or greater than the total applicable amount calculated in accordance with §138.80(f), based on a vessel carrying hazardous substances as cargo. As used in this paragraph, *working capital* means the amount of current assets located in the United States, less all current liabilities anywhere in the world; and *net worth* means the amount of all assets located in the United States, less all liabilities anywhere in the world. After the initial submission, for each of the applicant's fiscal years, the applicant or certificant shall submit statements as follows:

(i) *Initial and annual submissions.* An applicant or certificant shall submit

annual, current, and audited non-consolidated financial statements prepared in accordance with Generally Accepted Accounting Principles, and audited by an independent Certified Public Accountant. These financial statements must be audited in accordance with Generally Accepted Auditing Standards. These financial statements must be accompanied by an additional statement from the Treasurer (or equivalent official) of the applicant or certificant certifying both the amount of current assets and the amount of total assets included in the accompanying balance sheet, which are located in the United States. If the financial statements cannot be submitted in non-consolidated form, a consolidated statement may be submitted if accompanied by an additional statement prepared by the same Certified Public Accountant, verifying the amount by which the applicant's or certificant's—

(A) Total assets, located in the United States, exceed its total (i.e., worldwide) liabilities; and

(B) Current assets, located in the United States, exceed its total (i.e., worldwide) current liabilities. This additional statement must specifically name the applicant or certificant, indicate that the amounts so verified relate only to the applicant or certificant, apart from any other affiliated entity, and identify the consolidated financial statement to which it applies.

(ii) *Semiannual submissions.* When the applicant's or certificant's demonstrated net worth is not at least ten times the total applicable amount of financial responsibility, the applicant's or certificant's Treasurer (or equivalent official) shall file affidavits covering the first six months of the applicant's or certificant's fiscal year. The affidavits must state that neither the working capital nor the net worth have, during the first six months of the current fiscal year, fallen below the applicant's or certificant's required amount of financial responsibility as determined in accordance with this part.

(iii) *Additional submissions.* An applicant or certificant—

(A) Shall, upon request of the Director, NPFC, submit additional financial information; and

(B) Who establishes financial responsibility under paragraph (b)(3) of this section shall notify the Director, NPFC, within five business days of the date the applicant or certificant knows, or has reason to believe, that the working capital or net worth has fallen below the amounts required by this part.

(iv) *Time for submissions.* All required annual financial statements must be received by the Director, NPFC, within 90 days after the close of the applicant's or certificant's fiscal year, and all affidavits required by paragraph (b)(3)(ii) of this section within 30 days after the close of the applicable six-month period. Upon written request, the Director, NPFC, may grant an extension of the time limits for filing the annual financial statements or affidavits. An applicant or certificant that requests an extension must set forth the reason for the extension and deliver the request at least 15 days before the statements or affidavits are due. The Director, NPFC, will not consider a request for an extension of more than 60 days.

(v) *Failure to submit.* The Director, NPFC, may revoke a certificate for failure of the certificant to submit any statement, data, notification, or affidavit required by paragraph (b)(3) of this section.

(vi) *Waiver of working capital.* The Director, NPFC, may waive the working capital requirement for any applicant or certificant that—

(A) Is a regulated public utility, a municipal or higher-level governmental entity, or an entity operating solely as a charitable, non-profit making organization qualifying under section 501(c) Internal Revenue Code. The applicant or certificant must demonstrate in writing that the grant of a waiver would benefit a local public interest; or

(B) Demonstrates in writing that working capital is not a significant factor in the applicant's or certificant's financial condition. An applicant's or certificant's net worth in relation to the amount of its required amount of financial responsibility and

a history of stable operations are the major elements considered by the Director, NPFC.

(4) *Financial Guaranty.* By filing with the Director, NPFC, a Financial Guaranty Form CG–5586–3, illustrated in Appendix E of this part (when applying for a Master Certificate, a Master Financial Guaranty Form CG–5586–4, illustrated in Appendix F of this part), executed by not more than four financial guarantors, such as a parent or affiliate acceptable to the Coast Guard. A financial guarantor shall comply with all of the self-insurance provisions of paragraph (b)(3) of this section. In addition, a person that is a financial guarantor for more than one applicant or certificant shall have working capital and net worth no less than the aggregate total applicable amounts of financial responsibility provided as a guarantor for each applicant or certificant, plus the amount required to be demonstrated by a self-insurer under this part, if also acting as a self-insurer.

(5) *Other evidence of financial responsibility.* The Director, NPFC, will not accept a self-insurance method other than the one described in paragraph (b)(3) of this section. An applicant may in writing request the Director, NPFC, to accept a method different from one described in paragraph (b) (1), (2), or (4) of this section to demonstrate evidence of financial responsibility. An applicant submitting a request under this paragraph shall submit the request to the Director, NPFC, at least 45 days prior to the date the Certificate is required. The applicant shall describe in detail the method proposed, the reasons why the applicant does not wish to use or is unable to use one of the methods described in paragraph (b) (1), (2), or (4) of this section, and how the proposed method assures that the applicant is able to fulfill its obligation to pay costs and damages in the event of an incident or a release or threatened release. The Director, NPFC, will not accept a method under this paragraph that merely deletes or alters a provision of one of the methods described in paragraph (b) (1), (2), or (4) of this section (for example, one that alters the termination clause of the insurance guaranty form illustrated in Appendix B of this part). An applicant that makes a request under this paragraph shall provide the Director, NPFC, a proposed guaranty form that includes all the elements described in paragraphs (c) and (d) of this section. A decision of the Director, NPFC, not to accept a method requested by an applicant under this paragraph is final agency action.

(c) *Forms*—(1) *Multiple guarantors.* Four or fewer insurers (a lead underwriter is considered to be one insurer) may jointly execute an insurance guaranty form. Ten or fewer sureties (including lead sureties) may jointly execute a surety bond guaranty form. Four or fewer financial guarantors may jointly execute a financial guaranty form. If more than one insurer, surety, or financial guarantor executes the relevant form—

(i) Each is bound for the payment of sums only in accordance with the percentage of vertical participation specified on the relevant form for that insurer, surety, or financial guarantor. Participation in the form of layering (tiers, one in excess of another) is not acceptable; only vertical participation on a percentage basis is acceptable unless none of the participants specifies a percent of participation. If no percentage of participation is specified for an insurer, surety, or financial guarantor, the liability of that insurer, surety, or financial guarantor is joint and several for the total of the unspecified portions; and

(ii) The guarantors must designate a lead guarantor having authority to bind all guarantors for actions required of guarantors under the Acts, including but not limited to receipt of designation of source, advertisement of a designation, and receipt and settlement of claims.

(2) *Operator name.* An applicant shall ensure that each form submitted under this part sets forth in full the correct legal name of the vessel operator to whom a certificate is to be issued.

(d) *Direct Action.* (1) *Acknowledgment.* Any evidence of financial responsibility submitted under this part must contain an acknowledgment by the insurer or other guarantor that an action in court by a claimant (including a claimant by right of subrogation) for

costs and damage claims arising under the provisions of the Acts, may be brought directly against the insurer or other guarantor. The evidence of financial responsibility must also provide that, in the event an action is brought under the Acts directly against the insurer or other guarantor, the insurer or other guarantor may invoke only the following rights and defenses:

(i) The incident, release, or threatened release was caused by the willful misconduct of the person for whom the guaranty is provided.

(ii) Any defense that the person for whom the guaranty is provided may raise under the Acts.

(iii) A defense relating to the amount of a claim or claims, filed in any action in any court or other proceeding, that exceeds the amount of the guaranty with respect to an incident or with respect to a release or threatened release.

(iv) A defense relating to the amount of a claim or claims that exceeds the amount of the guaranty, which amount is based on the gross tonnage of the vessel as entered on the vessel's International Tonnage Certificate or other official, applicable certificate of measurement, except when the guarantor knew or should have known that the applicable tonnage certificate was incorrect.

(v) The claim is not one made under either of the Acts.

(2) *Limitation on guarantor liability.* A guarantor that participates in any evidence of financial responsibility under this part shall be liable because of that participation, with respect to an incident or a release or threatened release, in any proceeding only for the amount and type of costs and damages specified in the evidence of financial responsibility. A guarantor shall not be considered to have consented to direct action under any law other than the Acts, or to unlimited liability under any law or in any venue, solely because of the guarantor's participation in providing any evidence of financial responsibility under this part. In the event of any finding that liability of a guarantor exceeds the amount of the guaranty provided under this part, that guaranty is considered null and void with respect to that excess.

(e) *Public access to data.* Financial data filed by an applicant, certificant, and any other person is considered public information to the extent required by the Freedom of Information Act (5 U.S.C. 552) and permitted by the Privacy Act (5 U.S.C. 552a).

(f) *Total applicable amount.* (1) The applicable amount under OPA 90 is determined as follows:

(i) For a tank vessel (except a tank vessel on which no liquid hazardous material in bulk is being carried as cargo or cargo residue, and on which the only oil carried as cargo or cargo residue is an animal fat or vegetable oil, as those terms are used in section 2 of the Edible Oil Regulatory Reform Act (Pub. L. 104–55)).

(A) Over 300 gross tons (and a vessel of 300 gross tons or less using the waters of the United States Exclusive Economic Zone to transship or lighter oil destined for a place subject to the jurisdiction of the United States, as specified in § 138.12(a)(1)) but not exceeding 3,000 gross tons, the greater of $2,000,000 or $1,200 per gross ton; and

(B) Over 3,000 gross tons, the greater of $10,000,000 or $1,200 per gross ton.

(ii) For a vessel other than a tank vessel under paragraph (f)(1)(i) of this section that is over 300 gross tons or that is 300 gross tons or less using the waters of the Exclusive Economic Zone of the United States to transship or lighter oil destined for a place subject to the jurisdiction of the United States, the greater of $500,000 or $600 per gross ton.

(2) The applicable amount under CERCLA is determined as follows:

(i) For a vessel over 300 gross tons carrying a hazardous substance as cargo, the greater of $5,000,000 or $300 per gross ton.

(ii) For any other vessel over 300 gross tons, the greater of $500,000 or $300 per gross ton.

(3) The total applicable amount is the maximum applicable amount calculated under paragraph (f)(1) of this section plus maximum applicable amount calculated under paragraph (f)(2) of this section.

[CGD 91–005, 59 FR 34227, July 1, 1994, as amended by CGD 91–005, 61 FR 9274, Mar. 7, 1996]

§138.90 Individual and Fleet Certificates.

(a) The Director, NPFC, issues an individual Certificate for each vessel listed on a completed application when the Director, NPFC, determines that acceptable evidence of financial responsibility has been provided and appropriate fees have been paid, except where a Fleet Certificate is issued under this section or where a Master Certificate is issued under §138.110. Each Certificate of any type issued under this part is issued only in the name of a vessel operator and is effective for not more than three years from the date of issue, as indicated on each Certificate. An authorized official of the applicant may submit to the Director, NPFC, a letter requesting that additional vessels be added to a previously submitted application for an individual Certificate. The letter must set forth all information required in item 5 of the application form. The authorized official shall also submit or cause to be submitted acceptable evidence of financial responsibility, if required, and certification fees for these additional vessels. The certificant shall carry the original individual Certificate on the vessel named on the Certificate, except that a legible copy (certified as accurate by a notary public or other person authorized to take oaths in the United States) may be carried instead of the original if the vessel is an unmanned barge and does not have a document carrying device which the vessel operator believes would offer suitable protection for the original Certificate. If a notarized copy of an individual Certificate is carried aboard a barge, the Certificate shall retain the original in the United States and shall make it readily available for inspection by United States Government officials.

(b) An operator of two or more barges that are not tank vessels and that from time to time may be subject to this part (e.g., a hopper barge over 300 gross tons when carrying oily metal shavings or similar cargo), so long as the operator of such a fleet is a self-insurer or arranges with an acceptable guarantor to cover, automatically, all such barges for which the operator may from time to time be responsible, may apply to the Director, NPFC, for issuance of a Fleet Certificate. A legible copy of the Fleet Certificate, certified as accurate by a notary public or other person authorized to take oaths in the United States, must be carried on each barge when subject to this part. In addition, the certificant shall retain in the United States the original Fleet Certificate and shall make it readily available for inspection by United States Government officials. The original Fleet Certificate, when invalid, must be completed on the reverse side and returned immediately to the Director, NPFC, and all copies must be destroyed. When the certificant ceases to be responsible for a barge covered by a Fleet Certificate, the certificant shall immediately destroy the copy of the Fleet Certificate carried aboard that barge.

(c) A person shall not make any alteration on any Certificate issued under this part or copy of that Certificate, except the notarized certifications permitted in §138.110(f) and paragraphs (a) and (b) of this section. A Certificate or copy containing any alteration is void.

(d) If, at any time after a Certificate has been issued, a certificant becomes aware of a change in any of the facts contained in the application or supporting documentation, the certificant shall notify the Director, NPFC, in writing within 10 days of becoming aware of the change. A vessel or operator name change or change of a guarantor shall be reported as soon as possible by telefax or other electronic means to the Director, NPFC, and followed by a written notice sent within three business days.

(e) Except as provided in §138.90(f), at the moment a certificant ceases to be the operator of a vessel for any reason, including a vessel that is scrapped or transferred to a new operator, the individual Certificate naming the vessel, and any copies of the Certificate, are void and their further use is prohibited. In that case, the certificant shall, within 10 days of the Certificate becoming void, complete the reverse side of the original individual Certificate naming the involved vessel and return the Certificate to the Director, NPFC. If the Certificate cannot be returned

because it has been lost or destroyed, the certificant shall, within three business days, submit the following information in writing to the Director, NPFC:

(1) The number of the individual Certificate and the name of the vessel.

(2) The date and reason why the certificant ceased to be the operator of the vessel.

(3) The location of the vessel on the date the certificant ceased to be the operator.

(4) The name and mailing address of the person to whom the vessel was sold or transferred.

(f) In the event of the temporary transfer of custody of an unmanned barge certificated under this part, where the certificant transferring the barge continues to be liable under the Acts and continues to maintain on file with the Director, NPFC, acceptable evidence of financial responsibility with respect to the barge, the existing individual Certificate remains in effect. A temporary new individual Certificate is not required. A transferee is encouraged to require the transferring certificant to acknowledge in writing that the transferring certificant agrees to remain responsible for pollution liabilities.

§ 138.100 Non-owning operator's responsibility for identification.

(a) Each operator that is not an owner of a vessel certificated under this part, other than an unmanned barge, shall ensure that the original or a legible copy of the demise charter-party (or other written document on the owner's letterhead, signed by the vessel owner, which specifically identifies the vessel operator named on the Certificate) is maintained on board the vessel.

(b) The demise charter-party or other document required by paragraph (a) of this section must be presented, upon request, for examination to a United States Government official.

§ 138.110 Master Certificates.

(a) A contractor or other person who is responsible for a vessel in the capacity of a builder, scrapper, lessor, or seller (including a repairer who agrees to be responsible for a vessel under its custody) may apply for a Master Certificate instead of applying for an individual Certificate for each vessel. A Master Certificate covers all of the vessels subject to this part held by the applicant solely for purposes of construction, repair, scrapping, lease, or sale. A vessel which is being operated commercially in any business venture, including the business of building, repairing, scrapping, leasing, or selling (e.g., a slop barge used by a shipyard) cannot be covered by a Master Certificate. Any vessel for which a Certificate is required, but which is not eligible for a Master Certificate, must be covered by either an individual Certificate or a Fleet Certificate.

(b) An applicant for a Master Certificate shall submit an application form in the manner prescribed by § 138.60. An applicant shall establish evidence of financial responsibility in accordance with § 138.80, by submission, for example, of an acceptable Master Insurance Guaranty Form, Surety Bond Guaranty Form, Master Financial Guaranty Form, or acceptable self-insurance documentation. An application must be completed in full, except for Item 5. The applicant shall make the following statement in Item 5: ''This is an application for a Master Certificate. The largest tank vessel to be covered by this application is [insert applicable gross tons] gross tons. The largest vessel other than a tank vessel is [insert applicable gross tons] gross tons.'' The dollar amount of financial responsibility evidenced by the applicant must be sufficient to meet the amount required under this part.

(c) Each Master Certificate issued by the Director, NPFC, indicates—

(1) The name of the applicant (i.e., the builder, repairer, scrapper, lessor, or seller);

(2) The date of issuance and termination, encompassing a period of not more than three years; and

(3) The gross tons of the largest tank vessel and gross tons of the largest vessel other than a tank vessel eligible for coverage by that Master Certificate. The Master Certificate does not identify the name of each vessel covered by the Certificate.

(d) Each additional vessel which does not exceed the respective tonnages indicated on the Master Certificate and which is eligible for coverage by a Master Certificate is automatically covered by that Master Certificate. Before acquiring a vessel, by any means, including conversion of an existing vessel, that would have the effect of increasing the certificant's required amount of financial responsibility (above that provided for issuance of the existing Master Certificate), the certificant shall submit to the Director, NPFC, the following:

(1) Evidence of increased financial responsibility.

(2) A new certification fee.

(3) Either a new application or a letter amending the existing application to reflect the new gross tonnage which is to be indicated on a new Master Certificate.

(e) A person to whom a Master Certificate has been issued shall submit to the Director, NPFC, every six months beginning the month after the month in which the Master Certificate is issued, a report indicating the name, previous name, type, and gross tonnage of each vessel covered by the Master Certificate during the preceding six-month reporting period and indicating which vessels, if any, are tank vessels.

(f) The certificant shall ensure that a legible copy of the Master Certificate (certified as accurate by a notary public or other person authorized to take oaths in the United States) is carried aboard each vessel covered by the Master Certificate. The certificant shall retain the original Master Certificate at a location in the United States and shall make it readily available for inspection by United States Government officials.

(g) Upon revocation or other invalidation of the Master Certificate, the certificant shall return the original Certificate within 10 days to the Director, NPFC. The certificant shall ensure that all copies of the Certificate are destroyed.

[CGD 91–005, 59 FR 34227, July 1, 1994, as amended by CGD 91–005, 61 FR 9275, Mar. 7, 1996]

§ 138.120 Certificates, denial or revocation.

(a) The Director, NPFC, may deny a Certificate when an applicant—

(1) Willfully or knowingly makes a false statement in connection with an application for an initial or renewal Certificate;

(2) Fails to establish acceptable evidence of financial responsibility as required by this part;

(3) Fails to pay the required application or certificate fees;

(4) Fails to comply with or respond to lawful inquiries, regulations, or orders of the Coast Guard pertaining to the activities subject to this part; or

(5) Fails to timely file required statements, data, notifications, or affidavits.

(b) The Director, NPFC, may revoke a Certificate when a certificant—

(1) Willfully or knowingly makes a false statement in connection with an application for an initial or a renewal Certificate, or in connection with any other filing required by this part;

(2) Fails to comply with or respond to lawful inquiries, regulations, or orders of the Coast Guard pertaining to the activities subject to this part; or

(3) Fails to timely file required statements, data, notifications, or affidavits.

(c) A Certificate is immediately invalid, and considered revoked, without prior notice, when the certificant—

(1) Fails to maintain acceptable evidence of financial responsibility as required by this part;

(2) Is no longer the responsible operator of the vessel in question; or

(3) Alters any Certificate or copy of a Certificate except as permitted by this part in connection with notarized certifications of copies.

(d) The Director, NPFC, advises the applicant or certificant, in writing, of the intention to deny or revoke a Certificate under paragraph (a) or (b) of this section and states the reason therefor. Written advice from the Director, NPFC, that an incomplete application will be considered withdrawn unless it is completed within a stated period, is the equivalent of a denial.

(e) If the intended revocation under paragraph (b) of this section is based

on failure to timely file the required financial statements, data, notifications, or affidavits, the revocation is effective 10 days after the date of the notice of intention to revoke, unless, before revocation, the certificant demonstrates to the satisfaction of the Director, NPFC, that the required documents were timely filed or have been filed.

(f) If the intended denial is based on paragraph (a)(1) or (a)(4) of this section, or the intended revocation is based on paragraph (b)(1) or (b)(2) of this section, the applicant or certificant may request, in writing, an opportunity to present information for the purpose of showing that the applicant or certificant is in compliance with the part. The request must be received by the Director, NPFC, within 10 days after the date of the notification of intention to deny or revoke. A Certificate subject to revocation under this paragraph remains valid until the Director, NPFC, issues a written decision revoking the Certificate.

(g) An applicant or certificant whose Certificate has been denied under paragraph (a) of this section or revoked under paragraph (b) or (c) of this section may request the Director, NPFC, to reconsider the denial or revocation. The certificant shall file a request for reconsideration, in writing, to the Director, NPFC, within 20 days of the date of the denial or revocation. The certificant shall state the reasons for reconsideration. The Director, NPFC, issues a written decision on the request within 30 days of receipt, except that failure to issue a decision within 30 days shall be deemed an affirmance of a denial or revocation. Until the Director, NPFC, issues this decision, a revoked certificate remains invalid. A decision by the Director, NPFC, affirming a denial or revocation, is final agency action.

§ 138.130 Fees.

(a) The Director, NPFC, will not issue a Certificate until the fees set forth in paragraphs (c) and (d) of this section have been paid.

(b) Fees must be paid in United States currency by check, draft, or postal money order made payable to the ''U.S. Coast Guard''. Cash will not be accepted.

(c) Except as provided in § 138.70(c), an applicant that submits an application for the first time under this part, shall pay an initial, non-refundable application fee of $150 for each type of application (i.e., individual Certificate(s), Fleet Certificate, and Master Certificate). An applicant that submits an application for an additional (i.e., supplemental) individual Certificate, or to replace, amend or renew an existing Certificate, is not required to pay a new application fee. However, if an applicant for any reason withdraws or permits the withdrawal of an application for an individual Certificate(s) and the applicant holds no valid individual Certificate(s), in order to reapply for an individual Certificate(s) covering the same or different vessels the applicant shall submit a new application form and an application fee of $150. Similarly, an applicant shall submit a new application form and fee to obtain a new Fleet or Master Certificate following invalidation of a Fleet or Master Certificate.

(d) In addition to the application fee of $150, an applicant shall also pay a certification fee of $80 for each Certificate requested. An applicant shall submit the certification fee for each vessel listed in, or later added to, an application for an individual Certificate(s). An applicant shall submit the $80 certification fee to renew or to reissue a Certificate for any reason, including, but not limited to, a vessel or operator name change or a lost certificate.

(e) A certification fee is refunded, upon receipt of a written request, if the application is denied or withdrawn before issuance of the Certificate. Overpayments of application and certification fees are refunded, on request, only if the refund is for $50 or more. However, any overpayments not refunded will be credited, for a period of three years from the date of receipt of the monies by the Coast Guard, for the applicant's possible future use or transfer to another applicant under this part.

§ 138.140 Enforcement.

(a) Any person who fails to comply with this part with respect to evidence of financial responsibility under section 1016 of OPA 90 (33 U.S.C. 2716) is

subject to a civil penalty. In addition, under section 4303(b) of that Act (33 U.S.C. 2716a(b)), the Attorney General may secure such relief as may be necessary to compel compliance with this part including termination of operations. Further, any person who fails to comply with this part with respect to evidence of financial responsibility under section 108(a)(1) of CERCLA (42 U.S.C. 9608(a)(1)), is subject to a Class I administrative civil penalty and a Class II administrative civil penalty or judicial penalty.

(b) The Secretary of the Treasury shall withhold or revoke the clearance required by 46 U.S.C. App. 91 to any vessel subject to this part that does not produce evidence of financial responsibility required by this part.

(c) The Coast Guard may deny entry to any port or place in the United States or the navigable waters of the United States, and may detain at a port or place in the United States in which it is located, any vessel subject to this part, which, upon request, does not produce evidence of financial responsibility required by this part.

(d) Any vessel subject to this part which is found in the navigable waters without the necessary evidence of financial responsibility is subject to seizure by and forfeiture to the United States.

(e) Knowingly and willfully using an invalid Certificate, or any copy thereof, is fraud.

[CGD 91–005, 59 FR 34227, July 1, 1994, as amended by CGD 96–052, 62 FR 16703, Apr. 8, 1997]

§ 138.150 Service of process.

(a) When executing the forms required by this part, each applicant and guarantor shall designate thereon a person located in the United States as its agent for service of process for purposes of this part and for receipt of notices of designations and presentations of claims under the Acts (collectively referred to as ''service of process''). Each designated agent shall acknowledge the designation in writing unless the agent has already furnished the Director, NPFC, with a ''master'' (i.e., blanket) concurrence showing that it has agreed in advance to act as the United States agent for service of process for the applicant, certificant, or guarantor in question.

(b) If any applicant, certificant, or guarantor desires, for any reason, to change any designated agent, the applicant, certificant, or guarantor shall notify the Director, NPFC, of the change and furnish the relevant information, including the new agent's acknowledgment in accordance with paragraph (a) of this section, if a ''master'' concurrence is not applicable. In the event of death, disability, or unavailability of a designated agent, the applicant, certificant, or guarantor shall designate another agent in accordance with paragraph (a) of this section within 10 days of knowledge of any such event. The applicant, certificant, or guarantor shall submit the new designation to the Director, NPFC. The Director, NPFC, may revoke a certificate if an applicant, certificant, or guarantor fails to designate and maintain an agent for service of process.

(c) If a designated agent can not be served because of death, disability, unavailability, or similar event and another agent has not been designated under this section, then service of process on the Director, NPFC, will constitute valid service of process. Service of process on the Director, NPFC, will not be effective unless the server—

(1) Sends the applicant, certificant, or guarantor (by registered mail, at its last known address on file with the Director, NPFC), a copy of each document served on the Director, NPFC; and

(2) Attests to this registered mailing, at the time process is served upon the Director, NPFC, indicating that the intent of the mailing is to effect service of process on the applicant, certificant, or guarantor and that service on the designated agent is not possible, stating the reason why.

APPENDIX A TO PART 138—APPLICATION FORM

(30 min. per respondent)
Approved OMB No. 2115–0545

DEPARTMENT OF TRANSPORTATION
U. S. COAST GUARD
CG–5585

APPLICATION FOR VESSEL CERTIFICATE OF FINANCIAL RESPONSIBILITY (WATER POLLUTION)

GENERAL
(PART 1 OF 4 PARTS)

INSTRUCTIONS

Please type or print and submit this application to Director, Coast Guard National Pollution Funds Center (cv), 4200 Wilson Boulevard, Suite 1000, Arlington, VA 22203–1804. The application is in four parts: Part I – General; Part II – Evidence of Financial Responsibility; Part III – Declaration; Part IV – Concurrence of Agent. Applicants must answer all applicable questions. If a question does not apply, answer "not applicable." Incomplete applications will be returned. If additional space is required, supplemental sheets may be attached. All information must be provided in the English language.

THIS SPACE FOR USE BY USCG ONLY

1. (a) Legal name of applicant (name of responsible operator of all vessels listed in Part II):

(b) English equivalent of legal name if customarily written in language other than English:

(c) Trade name, if any:

2. Is this the first time the above–named applicant is submitting application Form CG–5585?

☐ YES ☐ NO

If "NO", what Coast Guard control number was assigned to the first application Form CG–5585?

_____

3. State applicant's legal form of organization, i.e., whether operating as an individual, corporation, partnership, association, joint stock company, business trust, or other organized group of persons (whether incorporated or not) or as a receiver, trustee, or other liquidating agent and briefly describe current business activities and length of time engaged therein.

(a) If a corporation, association, or other organization, indicate:

State in the United States, or foreign country, in which incorporated or organized:	Date of incorporation or organization:

(b) If a partnership, provide name and address of each partner:

4. Name and address of applicant's United States agent or other person authorized by applicant to accept service of process and receipt of notices of designations and presentations of claims in the United States (collectively referred to as "service of process"). (See Part IV) (U. S. applicants may appoint themselves as agent, eliminating the need to complete Part IV.)

PREVIOUS EDITION IS OBSOLETE

–1–

Reverse of CG-5585

EVIDENCE OF FINANCIAL RESPONSIBILITY (PART II OF 4 PARTS)

5. List all applicant's vessels which require Certificates of Financial Responsibility under 33 CFR 138.12. In column (f) indicate the number "1" if the operator is also the registered owner. Indicate "2" in column (f) if the operator is not the registered owner.

NAME OF VESSEL (a)	TYPE OF VESSEL *(See note below)* (b)	COUNTRY OF REGISTRY (c)	US VESSELS: Documentation Number FOREIGN VESSELS: International Maritime Organization (IMO) Number or Country of Registration Number if no IMO number has been assigned. (d)	GROSS TONS (e)	"1" or "2" (f)

NOTE: Designate the type of vessel by using a number from one of the following categories:

CARGO VESSELS, SELF-PROPELLED

Breakbulk freighter 10
Containership * 11
Roll on-roll off 12
Barge carrier *(e.g., lash, seabee)* 13
Combination breakbulk containership * 14
Combination roll on-roll off containership * 15
Combination barge carrier containership * 16
Tanker 17
Dry bulk carrier 18
All other self-propelled cargo vessels 19
Oil/bulk/ore carrier (OBO) 20

PASSENGER VESSELS

Passenger vessel * * 30
Combination passenger/cargo vessel * * 31
Ferry * * 32

RECREATIONAL VESSELS

All types of pleasure craft 40

UTILITY CRAFT

Tank barge 50
Tug and towboat 51
Barge and scow 52
Mobile offshore drilling unit 53
Fishing vessel 54
Factory vessel 55
Research vessel 56
All other utility craft *** 57

MISCELLANEOUS

Vessels not otherwise specified 60

* Containership categories should be assigned only to vessels having fixed container cells or regularly carrying multi-tier container deckloads.
** Passenger categories should be assigned only to vessels carrying more than 12 passengers for hire.
*** Includes floating cranes, dredges, docks, etc.

5. (g) If applicant indicated "2" for any vessel listed above in column 5(f), indicate:

NAME OF VESSEL	OWNER	OWNER'S MAILING ADDRESS

-2-

PART II (CONT'D)

6. Items 7 through 11 are methods of establishing financial responsibility. Check the appropriate box(es) below and answer only the item(s) which are applicable to this application:

☐ Insurance *(Answer item 7)*	☐ Surety Bond *(Answer item 8)*	☐ Financial Guaranty *(Answer item 9)*	☐ Self-Insurance *(Answer item 10)*	☐ Other evidence *(Answer item 11)*

7. Name and address of applicant's insurance guarantor *(evidence of insurance acceptable to the Director, Coast Guard National Pollution Funds Center, on Insurance Guaranty Form CG-5586 or Master Insurance Guaranty Form CG-5586-1, must be filed before a Certificate will be issued)*:

8. Total amount of surety bond guaranty.

$_____

Name and address of applicant's surety bond guarantor *(Surety Bond Guaranty Form CG-5586-2 must be filed before a Certificate will be issued)*:

9. Name and address of applicant's financial guarantor *(Financial Guaranty Form CG-5586-3, or Master Financial Guaranty Form CG-5586-4, and all required financial data must be filed before a Certificate will be issued)*:

Financial Guarantor's fiscal year:

_____ (Month) (Day) to _____ (Month) (Day)

10. If applicant intends to qualify as a self-insurer, attach all required financial data and indicate fiscal year:

_____ (Month) (Day) to _____ (Month) (Day)

11. If applicant intends to qualify through other evidence, supply all information required by 33 CFR 138.80(b)(5).

-3-

Reverse of CG-5585

DECLARATION (PART III OF 4 PARTS)

12. Applicant's mailing address (street, number, post office box, city, state or country. Indicate ZIP code if in the United States):	14. Type or print in this space the name and title of the offical who is signing this application:
	15. Address of principal office in the United States *(if any)*:
13. Telefax number and/or telex number and answerback:	16. Telephone no. *(area code and number)*:

I declare that I have examined this application, including any accompanying schedules and statements, and, to the best of my knowledge and belief, it is true, correct, and complete. Furthermore, the applicant named in item 1(a) of Part I above is the responsible operator of all vessels now listed in or later added to this application. I agree that in the event the agent designated in item 4 of Part I above, or that agent's replacement as may be designated later with the approval of the Director, Coast Guard National Pollution Funds Center, cannot be served due to death, disability, unavailability, or similar event, the Director, Coast Guard National Pollution Funds Center, is considered the agent for service of process. I have signed this application in my capacity as an authorized official of the applicant, or, if acting under a power of attorney, pursuant to the power vested in me by the applicant as evidenced by the attached power of attorney.

IMPORTANT

DATE	SIGNATURE OF AUTHORIZED OFFICIAL

NOTE: Please be sure that Parts I, II, and III have been completed in full and that Part III has been dated and signed. Then proceed to Part IV, attached.

NO CERTIFICATE WILL BE ISSUED UNLESS A COMPLETED APPLICATION FORM HAS BEEN RECEIVED, PROCESSED AND APPROVED.

COMMENTS:

Any person who knowingly and willfully makes a false statement in this application is subject to the sanctions prescribed in 18 U.S.C. 1001.

-4-

CONCURRENCE OF AGENT (PART IV OF 4 PARTS)

PART IV–A must be completed by the person designated in item 4 of Part I to serve as applicant's United States agent for service of process. Part IV–B must be completed by the applicant. After Parts IV–A and IV–B are completed, Part IV should be submitted to the Director, Coast Guard National Pollution Funds Center, by the applicant or by the agent, either seperately or together with Parts I, II, and III. *(Part IV need not be completed if the agent designated in item IV of Part I already has submitted to the U.S. Coast Guard an acceptable blanket Concurrence of Agent, agreeing to serve on behalf of certain applicants who designate that agent. Part IV also need not be completed if the applicant is a United States entity and has appointed itself as agent in item 4 of Part I.)*

PART IV – A

It is hereby agreed that _____

shall serve as the applicant's United States agent for service of process for purposes of 33 CFR part 138. This designation and agreement shall cease immediately in the event the applicant designates a new agent acceptable to the Director, National Pollution Funds Center.

Date: _____

Signature of person signing on behalf of agent: _____

Title: _____

Business address: _____

_____

PART IV – B *(TO BE COMPLETED BY APPLICANT)*

Name of applicant (from item I(a)): _____

Signature of authorized official signing on behalf of applicant: _____
(Person signing here should also sign in appropriate place on Part III)

Date: _____

Type or Print Name and Title: _____

–5–

APPENDIX B TO PART 138—INSURANCE GUARANTY FORM

Insurance Co. Form No. _____

DEPARTMENT OF TRANSPORTATION
U.S. COAST GUARD
CG-5586

INSURANCE GUARANTY FURNISHED AS EVIDENCE OF FINANCIAL RESPONSIBILITY UNDER THE OIL POLLUTION ACT OF 1990 AND THE COMPREHENSIVE ENVIRONMENTAL RESPONSE, COMPENSATION, AND LIABILITY ACT, AS AMENDED

The undersigned insurer or insurers ("Insurer") hereby certifies that for purposes of complying with the financial responsibility provisions of the Oil Pollution Act of 1990 ("OPA 90") and the Comprehensive Environmental Response, Compensation, and Liability Act, as amended ("CERCLA"), (referred to collectively as the "Acts"), the vessel owners, operators, and demise charterers ("Assured" or "Assureds") of each respective vessel named in the schedules below ("covered vessel") are insured by it against liability for costs and damages to which the Assureds may be subject under either section 1002 of OPA 90, as limited by section 1004(a), or section 107(a)(1) of CERCLA, as limited by sections 107(c)(1)(A) and (B), or both, in an amount equal to the total applicable amount determined in accordance with the Applicable Amount Table below, respecting each covered vessel.

The amount and scope of insurance coverage hereby provided by the Insurer is not conditioned or dependent in any way upon any contract, agreement, or understanding between an Assured and the Insurer. Coverage hereunder is for purposes of evidencing financial responsibility under each of the Acts, separately, at the levels in effect at the time of the incident(s), release(s) or threatened release(s) giving rise to claims.

_____,
(Name of Agent)

with offices at _____

_____,

is designated as the Insurer's agent in the United States for service of process for the purposes of this guaranty and for receipt of notices of designation and presentations of claims under the Acts. If the designated agent cannot be served due to death, disability, or unavailability, the Director, Coast Guard National Pollution Funds Center ("Center"), is the agent for these purposes.

The Insurer consents to be sued directly with respect to any claim, including any claim by right of subrogation, for costs and damages arising under section 1002 of OPA 90, as limited by section 1004(a), or section 107(a)(1) of CERCLA, as limited by sections 107(c)(1)(A) and (B), or both, against any Assured. However, in any direct action under OPA 90 the Insurer's liability per vessel per incident shall not exceed the amount determined under part I of the Applicable Amount Table below and, in any direct action under CERCLA,

the Insurer's liability per vessel per release or threatened release shall not exceed the amount determined under part II of the Applicable Amount Table below. The Insurer's obligation hereunder with respect to any one incident or release or threatened release shall be reduced by all payments or succession of payments for costs and damages, to one or more claimants, made by or on behalf of the Assured under OPA 90 or CERCLA or both, as applicable, for which the Assured is liable. The Insurer shall be entitled to invoke only the following rights and defenses in any direct action:

(1) The incident, release, or threatened release was caused by the willful misconduct of the Assured.

(2) Any defense that the Assured may raise under the Acts.

(3) A defense relating to the amount of a claim or claims, filed in any action in any court or other proceeding, that exceeds the amount of this guaranty with respect to an incident or with respect to a release or threatened release.

(4) A defense relating to the amount of a claim or claims that exceeds the amount of this guaranty, which amount is based on the gross tonnage of a covered vessel as entered on the vessel's International Tonnage Certificate or other official, applicable certificate of measurement, except where the guarantor knew or should have known that the applicable tonnage certificate was incorrect.

(5) The claim is not one made under either of the Acts.

No more than four Insurers (including lead underwriters) may execute this guaranty. If more than one Insurer executes this guaranty, each Insurer binds itself jointly and severally for the purpose of allowing joint action or actions against any or all of the Insurers, and for all other purposes each Insurer is bound for the payment of sums only in accordance with the percentage of participation set forth opposite the name of the Insurer below. If no percentage of participation is indicated for an Insurer or Insurers, the liability of such Insurer or Insurers shall be joint and several for the total of the unspecified portions.

_____
(Name of lead guarantor)

is designated as the lead guarantor having authority to bind all guarantors for actions of guarantors under the Acts, including but not limited to receipt of designation of source, advertisement of a designation, and receipt and settlement of claims (inapplicable if only one Insurer executes this guaranty).

The insurance evidenced by this guaranty shall be applicable only in relation to each incident, release, and threatened release occurring on or after the effective date and before the termination date of this guaranty and shall be applicable only in relation to each incident, release and threatened release giving rise to claims

under section 1002 of OPA 90 or section 107(a)(1) of CERCLA, or both, with respect to any of the covered vessels.

The effective date of this guaranty for each covered vessel is the date the vessel is named in or added to the schedules below. For each covered vessel, the termination date of this guaranty is 30 days after the date of receipt by the Center of written notice that the Insurer has elected to terminate the insurance evidenced by this guaranty and has so notified the vessel operator identified on the schedule below.

Termination of this guaranty as to any covered vessel shall not affect the liability of the Insurer in connection with an incident, release, or threatened release occurring prior to the date the termination becomes effective.

If, during the currency of this guaranty, an Assured requests that an additional vessel be made subject to this guaranty and if the Insurer accedes to that request and so notifies the Center, then that vessel is considered included in the schedules below as a covered vessel.

Title 33 CFR part 138 governs this guaranty.

Effective date of coverage for vessels originally named in this guaranty:

_____
(day/month/year)

_____
(Name of Insurer)

_____
(Percentage of Participation)

_____
(Mailing Address)

_____

_____

By: _____
(Signature of Official Signing
On Behalf of Insurer)

_____
(Typed Name and Title of Signer)

[NOTE: For each additional Insurer, provide information in the same manner as for Insurer above.]

CG-5586

3

APPLICABLE AMOUNT TABLE

(I) Applicable Amount Under the Oil Pollution Act of 1990

VESSEL TYPE	VESSEL'S GROSS TONS	APPLICABLE AMOUNT
Tank vessel (except a tank vessel on which no liquid hazardous material in bulk is being carried as cargo or cargo residue, and on which the only oil carried as cargo or cargo residue is an animal fat or vegetable oil, as those terms are used in section 2 of the Edible Oil Regulatory Reform Act (Pub. L. 104-55))	Over 300 gross tons* but not to exceed 3,000 gross tons.	The greater of $2,000,000 or $1,200 per gross ton.
Tank vessel (except a tank vessel on which no liquid hazardous material in bulk is being carried as cargo or cargo residue, and on which the only oil carried as cargo or cargo residue is an animal fat or vegetable oil, as those terms are used in section 2 of the Edible Oil Regulatory Reform Act (Pub. L. 104-55))	Over 3,000 gross tons.	The greater of $10,000,000 or $1,200 per gross ton.
Vessel other than a tank vessel (specified above)	Over 300 gross tons. *	The greater of $500,000 or $600 per gross ton.

* This minimum gross ton limit does not apply to any vessel using the waters of the U.S. Exclusive Economic Zone to transship or lighter oil destined for a place subject to the jurisdiction of the United States (as specified in 33 CFR 138.12(a)(1)).

CG-5586

4

(II) Applicable Amount Under the **Comprehensive Environmental Response, Compensation, and Liability Act**, as Amended.

VESSEL TYPE	APPLICABLE AMOUNT
Vessel over 300 gross tons carrying hazardous substance as cargo	The greater of $5,000,000 or $300 per gross ton.
Any other vessel over 300 gross tons	The greater of $500,000 or $300 per gross ton.

(III) Total Applicable Amount = Maximum applicable amount calculated under (I) plus maximum applicable amount calculated under (II).

SCHEDULE OF VESSELS

VESSEL	GROSS TONS	ASSURED OPERATOR

Insurance Guaranty Form CG–5586 No._____

6

SCHEDULE OF VESSELS
ADDED TO ABOVE VESSELS

VESSEL	GROSS TONS	ASSURED OPERATOR	DATE ADDED

Insurance Guaranty Form CG–5586 No._____

7

[CGD 91–005, 61 FR 9276, Mar. 7, 1996]

APPENDIX C TO PART 138—MASTER INSURANCE GUARANTY FORM

Appendix C to Part 138 - Master Insurance Guaranty Form

Insurance Co. Form No._____

DEPARTMENT OF TRANSPORTATION
U.S. COAST GUARD
CG-5586-1

MASTER INSURANCE GUARANTY FURNISHED AS EVIDENCE OF FINANCIAL RESPONSIBILITY FOR BUILDERS, REPAIRERS, SCRAPPERS, LESSORS, OR SELLERS OF VESSELS UNDER THE OIL POLLUTION ACT OF 1990 AND THE COMPREHENSIVE ENVIRONMENTAL RESPONSE, COMPENSATION, AND LIABILITY ACT, AS AMENDED

The undersigned insurer or insurers ("Insurer") hereby certifies that for purposes of complying with the financial responsibility provisions of the Oil Pollution Act of 1990 ("OPA 90") and the Comprehensive Environmental Response, Compensation, and Liability Act, as amended ("CERCLA"), (referred to collectively as the "Acts"),

_____
(Name of Assured Operator)

and any owner (collectively referred to as "Assured") of each vessel covered hereunder are insured by it against liability for costs and damages to which the Assured may be subject under either section 1002 of OPA 90, as limited by section 1004(a), or section 107(a)(1) of CERCLA, as limited by sections 107(c)(1)(A) and (B), or both, in an amount equal to the total applicable amount determined in accordance with the Applicable Amount Table below, respecting each covered vessel. This guaranty is applicable in relation to any vessel for which either or both Acts require financial responsibility and which the Assured holds for purposes of construction, repair, scrapping, lease, or sale.

The amount and scope of insurance coverage hereby provided by the Insurer is not conditioned or dependent in any way upon any contract, agreement, or understanding between the Assured and the Insurer. Coverage hereunder is for purposes of evidencing financial responsibility under each of the Acts, separately, at the levels in effect at the time of the incident(s), release(s), or threatened release(s) giving rise to claims.

_____
(Name of Agent)

with offices at _____

_____,

is designated as the Insurer's agent in the United States for service of process for purposes of this guaranty and for receipt of notices of designation and presentations of claims under the Acts. If the designated agent cannot be served due to death, disability, or unavailability, the Director, Coast Guard National

Pollution Funds Center ("Center"), is the agent for these purposes.

The Insurer consents to be sued directly with respect to any claim, including any claim by right of subrogation, for costs and damages arising under section 1002 of OPA 90, as limited by section 1004(a), or section 107(a)(1) of CERCLA, as limited by sections 107(c)(1)(A) and (B), or both, against the Assured. However, in any direct action under OPA 90, the Insurer's liability per vessel per incident shall not exceed the amount determined under part I of the Applicable Amount Table below and, in any direct action under CERCLA, the Insurer's liability per vessel per release or threatened release shall not exceed the amount determined under part II of the Applicable Amount Table below. The Insurer's obligation hereunder with respect to any one incident or release or threatened release shall be reduced by all payments or succession of payments for costs and damages, to one or more claimants, made by or on behalf of the Assured under OPA 90 or CERCLA or both, as applicable, for which the Assured is liable. The Insurer shall be entitled to invoke only the following rights and defenses in any direct action:

(1) The incident, release, or threatened release was caused by the willful misconduct of the Assured.

(2) Any defense that the Assured may raise under the Acts.

(3) A defense relating to the amount of a claim or claims, filed in any action in any court or other proceeding, that exceeds the amount of this guaranty with respect to an incident or with respect to a release or threatened release.

(4) A defense relating to the amount of a claim or claims that exceeds the amount of this guaranty, which amount is based on the gross tonnage of a covered vessel as entered on the vessel's International Tonnage Certificate or other official, applicable certificate of measurement, except where the guarantor knew or should have known that the applicable tonnage certificate was incorrect.

(5) The claim is not one made under either of the Acts.

No more than four Insurers (including lead underwriters) may execute this guaranty. If more than one Insurer executes this guaranty, each Insurer binds itself jointly and severally for the purpose of allowing joint action or actions against any or all of the Insurers, and for all other purposes each Insurer is bound for the payment of sums only in accordance with the percentage of participation set forth opposite the name of the Insurer below. If no percentage of participation is indicated for an Insurer or Insurers, the liability of such Insurer or Insurers shall be joint and several for the total of the unspecified portions.

_____

(Name of lead guarantor)

is designated as the lead guarantor having authority to bind all guarantors for actions of guarantors under the Acts, including but not limited to receipt of designation of source, advertisement of a designation, and receipt and settlement of claims (inapplicable if only one Insurer executes this guaranty).

The insurance evidenced by this guaranty shall be applicable only in relation to each incident, release, or threatened release occurring on or after the effective date of this guaranty and before the termination date of this guaranty and shall be applicable only in relation to each incident, release and threatened release giving rise to claims under section 1002 of OPA 90 or section 107(a)(1) of CERCLA, or both, with respect to any covered vessel. The termination date is 30 days after the date of receipt by the Center of written notice that the Insurer has elected to terminate the insurance evidenced by this guaranty and has so notified the above named Assured operator.

Termination of this guaranty does not affect the liability of the Insurer in connection with an incident, release, or threatened release occurring prior to the date the termination becomes effective.

Title 33 CFR part 138 governs this guaranty.

Effective Date: _____
(day/month/year)

_____
(Name of Insurer)

_____
(Percentage of Participation)

_____
(Mailing Address)

_____

_____

By: _____
(Signature of Official Signing
On Behalf of Insurer)

_____
(Typed Name and Title of Signer)

[NOTE: For each additional Insurer, provide information in the same manner as for Insurer above.]

APPLICABLE AMOUNT TABLE

(I) Applicable Amount Under the Oil Pollution Act of 1990

VESSEL TYPE	VESSEL'S GROSS TONS	APPLICABLE AMOUNT
Tank vessel (except a tank vessel on which no liquid hazardous material in bulk is being carried as cargo or cargo residue, and on which the only oil carried as cargo or cargo residue is an animal fat or vegetable oil, as those terms are used in section 2 of the Edible Oil Regulatory Reform Act (Pub. L. 104-55))	Over 300 gross tons* but not to exceed 3,000 gross tons.	The greater of $2,000,000 or $1,200 per gross ton.
Tank vessel (except a tank vessel on which no liquid hazardous material in bulk is being carried as cargo or cargo residue, and on which the only oil carried as cargo or cargo residue is an animal fat or vegetable oil, as those terms are used in section 2 of the Edible Oil Regulatory Reform Act (Pub. L. 104-55))	Over 3,000 gross tons.	The greater of $10,000,000 or $1,200 per gross ton.
Vessel other than a tank vessel (specified above)	Over 300 gross tons. *	The greater of $500,000 or $600 per gross ton.

* This minimum gross ton limit does not apply to any vessel using the waters of the U.S. Exclusive Economic Zone to transship or lighter oil destined for a place subject to the jurisdiction of the United States (as specified in 33 CFR 138.12(a)(1)).

CG-5586-1

4

(II) Applicable Amount Under the **Comprehensive Environmental Response, Compensation, and Liability Act**, as Amended.

VESSEL TYPE	APPLICABLE AMOUNT
Vessel over 300 gross tons carrying hazardous substance as cargo	The greater of $5,000,000 or $300 per gross ton.
Any other vessel over 300 gross tons	The greater of $500,000 or $300 per gross ton.

(III) Total Applicable Amount = Maximum applicable amount calculated under (I) plus maximum applicable amount calculated under (II).

CG–5586–1

5

[CGD 91–005, 61 FR 9283, Mar. 7, 1996]

APPENDIX D TO PART 138—SURETY BOND GUARANTY FORM

SURETY CO. BOND NO. _____

DEPARTMENT OF TRANSPORTATION
U.S. COAST GUARD
CG-5586-2

SURETY BOND GUARANTY FURNISHED AS EVIDENCE OF FINANCIAL RESPONSIBILITY UNDER THE OIL POLLUTION ACT OF 1990 AND THE COMPREHENSIVE ENVIRONMENTAL RESPONSE, COMPENSATION, AND LIABILITY ACT, AS AMENDED

_____
(Name of Vessel Operator)

of _____,
(City, State and Country)

("Principal"), and the undersigned surety company or companies ("Surety" or "Sureties"), each authorized by the United States Department of the Treasury to do business in the United States as an approved surety, are held and firmly bound unto the United States of America and other claimants in the penal sum of

$_____

for costs and damages for which the Principal is liable under the Oil Pollution Act of 1990 ("OPA 90") and the Comprehensive Environmental Response, Compensation, and Liability Act, as amended ("CERCLA") (referred to collectively as the "Acts"). "Principal" includes, in addition to the vessel operator, the owner and demise charterer of each vessel covered by this guaranty ("covered vessel").

The Principal has elected to file with the Director, Coast Guard National Pollution Funds Center ("Center") this surety bond guaranty as evidence of financial responsibility to obtain from the Coast Guard a Certificate, or Certificates, of Financial Responsibility (Water Pollution) under 33 CFR part 138, to meet any liability for costs and damages incurred in connection with a covered vessel under section 1002 of OPA 90, as limited by section 1004(a), or section 107(a)(1) of CERCLA, as limited by sections 107(c)(1)(A) and (B), or both.

The Surety agrees that the penal sum of this surety bond guaranty shall be available to pay to the United States of America or other claimants under the Acts any sum or sums for which the Principal may be held liable under the Acts. The penal sum shall be the total applicable amount, determined in accordance with the Applicable Amount Table below, for which payment we, the undersigned, bind ourselves and our heirs, executors, administrators, successors and assigns, jointly and severally.

No more than four Sureties (including lead Sureties) may execute this guaranty. If there is more than one surety company executing this guaranty, we, the Sureties, bind ourselves in the penal sum jointly and severally for the purpose of allowing a joint action or actions against any or all of us, and for all

joint action or actions against any or all of us, and for all other purposes each Surety binds itself, jointly and severally with the Principal, for the payment of the percentage of the penal sum only as is set forth opposite the name of each Surety.

If no percentage is indicated for a Surety or Sureties, the liability of such Surety or Sureties shall be joint and several for the total of the unspecified portions.

_____
(Name of lead guarantor)

is designated as the lead guarantor having authority to bind all guarantors for actions of guarantors under the Acts, including but not limited to receipt of designation of source, advertisement of a designation, and receipt and settlement of claims (inapplicable if only one Surety executes this guaranty).

Principal and the Surety or Sureties agree that if all or a portion of the penal sum is paid, the penal sum is considered reinstated to its full amount until 30 days after receipt from the Surety of written notice to the Director, NPFC, that the penal sum has not been reinstated. Principal and the Surety or Sureties further agree that if at the time of an incident, release, or threatened release a covered vessel is a tank vessel or is carrying a hazardous substance as cargo, the penal sum of this surety bond guaranty automatically increases, if necessary, to the total applicable amount appropriate for such vessel as determined in accordance with the Applicable Amount Table below. In no case, however, shall the penal sum be increased to an amount greater than the total applicable amount.

The penal sum is not further conditioned or dependent in any way upon any contract, agreement or understanding between the Principal and Surety. If the Principal is responsible for more than one vessel covered by this guaranty, then the penal sum is the total applicable amount for the vessel having the greatest liability under the Acts.

The liability of the Surety as guarantor under OPA or CERCLA, or both, shall not be discharged by any payment or succession of payments hereunder, unless and until such payment or payments amount in the aggregate to the penal sum of this bond guaranty.

Any claim, including any claim by right of subrogation, against the Principal for costs and damages arising under either section 1002 of OPA 90, as limited by section 1004(a), or section 107(a)(1) of CERCLA, as limited by sections 107(c)(1)(A) and (B), or both, may be brought directly against the Surety, and the Surety consents to suit with respect to these claims. However, in any direct action under OPA 90 the Surety's liability shall not exceed the amount determined under part I of the Applicable Amount Table below and, in any direct action under CERCLA the Surety's liability shall not exceed the amount determined under part II of the Applicable Amount Table below. The Surety's obligation hereunder with respect to any one incident or release or threatened release shall be reduced by all payments or succession of payments for costs and damages, to one or more claimants, made by or on behalf of the Principal under OPA 90 or CERCLA or both, as applicable, for which the Principal is liable. In the event of a direct claim, the Surety may invoke only the following rights and defenses:

(1) The incident, release, or threatened release was caused by the willful misconduct of the Principal.

(2) Any defense that the Principal may raise under the Acts.

(3) A defense relating to the amount of a claim or claims, filed in any action in any court or other proceeding, that exceeds the amount of this guaranty with respect to an incident or with respect to a release or threatened release.

(4) A defense relating to the amount of a claim or claims that exceeds the amount of this guaranty, which amount is based on the gross tonnage of the vessel as entered on the vessel's International Tonnage Certificate or other official, applicable certificate of measurement, except where the surety knew or should have known that the applicable tonnage certificate was incorrect.

(5) The claim is not one made under either of the Acts.

This bond is effective the _____ day of _____, _____, 12:01 a.m., standard time at the address of the Surety first named herein, and shall continue in force until discharged or terminated as herein provided. The above named Vessel Operator or the Surety may at any time terminate this bond guaranty by written notice sent by certified mail, registered mail, overnight delivery, or other comparable service to the other party, with a copy (showing that the original notice was sent to the other party by certified mail, registered mail, overnight delivery, or other comparable service) to the Center. The termination is effective thirty (30) days after the Center receives the written notice of termination. The Surety shall not be liable hereunder in connection with an incident, release, or threatened release occurring after the termination of this bond guaranty as herein provided, but the termination shall not affect the liability of the Surety in connection with an incident, release, or threatened release occurring prior to the date the termination becomes effective. Nor shall the Surety be liable hereunder in connection with a non-covered vessel, which is a vessel specifically named in other evidence of financial responsibility, which is applicable to that vessel on behalf of the above named Vessel Operator, and which is accepted by and on file with the Center during an incident, release, or threatened release giving rise to a claim against the Surety or Principal.

The Surety designates _____
(Name of Agent)

with offices at _____

_____

as the Surety's agent in the United States for service of process for the purposes of this surety bond guaranty and for receipt of notices of designation and presentations of claims under the Acts. If the designated agent cannot be served due to death, disability, or unavailability, the Director, Coast Guard National Pollution Funds Center, is the agent for these purposes.

CG-5586-2

4

Title 33 CFR part 138 governs this bond guaranty.

In witness whereof, the Vessel Operator, for itself and owners, and Surety have executed this instrument on the _____ day of _____, _____.

VESSEL OPERATOR

_____ (Signature of Sole Proprietor or Partner)	_____ (Business Address) _____
_____ (Typed)	_____
_____ (Signature of Sole Proprietor or Partner)	_____ (Business Address) _____
_____ (Typed)	_____
_____ (Signature of Sole Proprietor or Partner)	_____ (Business Address) _____
_____ (Typed)	_____

_____ (Corporation)

_____ (Business Address)

_____

(Affix Corporate Seal)

_____ (Signature)

_____ (Typed Name and Title)

CG–5586–2

5

SURETY

(Name)	(Percentage of Participation)
(Address)	(Affix Corporate Seal)
	(Signature(s))
(State of Incorporation)	(Typed Name(s) and Title(s))

[NOTE: For every co-Surety, provide information in the same manner as for Surety above.]

CG-5586-2

6

APPLICABLE AMOUNT TABLE

(I) Applicable Amount Under the Oil Pollution Act of 1990

VESSEL TYPE	VESSEL'S GROSS TONS	APPLICABLE AMOUNT
Tank vessel (except a tank vessel on which no liquid hazardous material in bulk is being carried as cargo or cargo residue, and on which the only oil carried as cargo or cargo residue is an animal fat or vegetable oil, as those terms are used in section 2 of the Edible Oil Regulatory Reform Act (Pub. L. 104-55))	Over 300 gross tons* but not to exceed 3,000 gross tons.	The greater of $2,000,000 or $1,200 per gross ton.
Tank vessel (except a tank vessel on which no liquid hazardous material in bulk is being carried as cargo or cargo residue, and on which the only oil carried as cargo or cargo residue is an animal fat or vegetable oil, as those terms are used in section 2 of the Edible Oil Regulatory Reform Act (Pub. L. 104-55))	Over 3,000 gross tons.	The greater of $10,000,000 or $1,200 per gross ton.
Vessel other than a tank vessel (specified above)	Over 300 gross tons. *	The greater of $500,000 or $600 per gross ton.

* This minimum gross ton limit does not apply to any vessel using the waters of the U.S. Exclusive Economic Zone to transship or lighter oil destined for a place subject to the jurisdiction of the United States (as specified in 33 CFR 138.12(a)(1)).

CG-5586-2

7

(II) Applicable Amount Under the **Comprehensive Environmental Response, Compensation, and Liability Act**, as Amended.

VESSEL TYPE	APPLICABLE AMOUNT
Vessel over 300 gross tons carrying hazardous substance as cargo	The greater of $5,000,000 or $300 per gross ton.
Any other vessel over 300 gross tons	The greater of $500,000 or $300 per gross ton.

(III) Total Applicable Amount = Maximum applicable amount calculated under (I) plus maximum applicable amount calculated under (II).

CG-5586-2

8

[CGD 91–005, 61 FR 9288, Mar. 7, 1996]

APPENDIX E TO PART 138—FINANCIAL GUARANTY FORM

FINANCIAL GUARANTY NO. _____

DEPARTMENT OF TRANSPORTATION
U.S. COAST GUARD
CG-5586-3

FINANCIAL GUARANTY FURNISHED AS EVIDENCE OF FINANCIAL RESPONSIBILITY UNDER THE OIL POLLUTION ACT OF 1990 AND THE COMPREHENSIVE ENVIRONMENTAL RESPONSE, COMPENSATION, AND LIABILITY ACT, AS AMENDED

1. _____,
(Name of Vessel Operator)
the operator of each vessel named in the annexed schedules ("covered vessel"), desires to establish evidence of financial responsibility for the owner, operator, and demise charterer (referred to collectively as "Operator") of each covered vessel in accordance with the Oil Pollution Act of 1990 ("OPA 90") and the Comprehensive Environmental Response, Compensation, and Liability Act, as amended ("CERCLA") (referred to collectively as the "Acts"). The undersigned Financial Guarantor or Guarantors ("Guarantor") hereby guarantees, subject to the provisions hereof, to discharge the Operator's liability with respect to each covered vessel for costs and damages under section 1002 of OPA 90, as limited by section 1004(a), or section 107(a)(1) of CERCLA, as limited by sections 107(c)(1)(B) and (A), or both, in an amount equal to the total applicable amount determined in accordance with the Applicable Amount Table below. The Operator and the Guarantor agree that if at the time of an incident, release, or threatened release a covered vessel is a tank vessel or is carrying a hazardous substance as cargo, the limit of liability of the Guarantor hereunder shall be the total applicable amount appropriate for such a vessel determined in accordance with the Applicable Amount Table below. The amount and scope of the Guarantor's liability are not further conditioned or dependent in any way upon any contract, agreement, or understanding between the Operator and the Guarantor. The Guarantor shall furnish written notice to the Director, Coast Guard National Pollution Funds Center ("Center"), of all judgments rendered and payments made by the Guarantor under this Financial Guaranty.

2. Any claim, including any claim by right of subrogation, against the Operator for costs and damages arising under either section 1002 of OPA 90 as limited by section 1004(a), or section 107(a)(1) of CERCLA as limited by sections 107(c)(1)(A) and (B), or both, may be brought directly against the Guarantor and the Guarantor consents to suit with respect to these claims. However, in any direct action under OPA 90 the Guarantor's liability per vessel per incident shall not exceed the amount determined under part I of the Applicable Amount Table below and, in any direct action under CERCLA the Guarantor's liability per vessel per release or threatened release shall not exceed the amount determined under part II of the Applicable Amount Table below. The Guarantor shall be entitled to invoke only the

FINANCIAL GUARANTY NO. _____

amount determined under part II of the Applicable Amount Table below. The Guarantor's obligation hereunder with respect to any one incident or release or threatened release shall be reduced by all payments or succession of payments for costs and damages, to one or more claimants, made by or on behalf of the Operator under OPA 90 or CERCLA or both, as applicable, for which the Operator is liable. The Guarantor shall be entitled to invoke only the following rights and defenses in any direct action:

(1) The incident, release, or threatened release was caused by the willful misconduct of the Operator.

(2) Any defense that the Operator may raise under the Acts.

(3) A defense relating to the amount of a claim or claims, filed in any action in any court or other proceeding, that exceeds the amount of this Guaranty with respect to an incident or with respect to a release or threatened release.

(4) A defense relating to the amount of a claim or claims that exceeds the amount of this Guaranty, which amount is based on the gross tonnage of the covered vessel as entered on the Vessel's International Tonnage Certificate or other official, applicable certificate of measurement, except where the guarantor knew or should have known that the applicable certificate was incorrect.

(5) The claim is not one made under either of the Acts.

3. The Guarantor's liability under this Guaranty shall attach only in relation to each incident, release, or threatened release occurring on or after the effective date and before the termination date of this Guaranty. The effective date of this Guaranty for each covered vessel listed below is the date the vessel is named in or added to the schedules below. For each covered vessel, the termination date of the Guaranty is 30 days after the date of receipt by the Center of written notice that the Guarantor has elected to terminate this Guaranty, with respect to any of the covered vessels, and has so notified the vessel Operator identified above on the schedule below. Termination of this Guaranty as to any vessel does not affect the liability of the Guarantor in connection with an incident, release, or threatened release occurring prior to the date the termination becomes effective.

4. If, during the currency of this Guaranty, the Operator requests that a vessel become subject to this Guaranty, and if the Guarantor accedes to that request and so notifies the Center in writing, then that vessel shall be considered included in Schedule B as a covered vessel and subject to this Guaranty.

CG-5586-3

FINANCIAL GUARANTY NO. _____

5. The Guarantor designates _____
(Name of Agent)
with offices at _____

_____
as the Guarantor's agent in the United States for service of process for purposes of this Guaranty and for receipt of notices of designation and presentations of claims under the Acts. If the designated agent cannot be served due to death, disability or unavailability, the Director, Coast Guard National Pollution Funds Center, is the agent for service of process.

6. No more than four Financial Guarantors may execute this Guaranty. If more than one Guarantor executes this Guaranty, each Guarantor binds itself jointly and severally for the purpose of allowing a joint action or actions against any or all of the Guarantors, and for all other purposes each Guarantor binds itself, jointly and severally with the Operator, for the payment of the percentage of sums only as is set forth opposite the name of the Guarantor. If no limit is indicated for a Guarantor or Guarantors, the liability of such Guarantor or Guarantors shall be joint and several for the total of the unspecified portions.

_____
(Name of Lead Guarantor)
is designated as the lead guarantor having authority to bind all guarantors for actions of guarantors under the Acts, including but not limited to receipt of designation of source, advertisement of a designation, and receipt and settlement of claims (inapplicable if only one Financial Guarantor executes this Guaranty).

7. Title 33 CFR part 138 governs this Financial Guaranty.

EFFECTIVE DATE: _____
(Month/Day/Year and Place of Execution)

_____
(Typed Name of Guarantor)

_____
(Address of Guarantor)

_____

_____
(Percentage of Participation)

By: _____
(Signature)

_____
(Type Name and Title of Person Signing Above)

[NOTE: For each co-Guarantor, provide information in the same manner as for Guarantor above.]

APPLICABLE AMOUNT TABLE

(I) Applicable Amount Under the Oil Pollution Act of 1990

VESSEL TYPE	VESSEL'S GROSS TONS	APPLICABLE AMOUNT
Tank vessel (except a tank vessel on which no liquid hazardous material in bulk is being carried as cargo or cargo residue, and on which the only oil carried as cargo or cargo residue is an animal fat or vegetable oil, as those terms are used in section 2 of the Edible Oil Regulatory Reform Act (Pub. L. 104-55))	Over 300 gross tons* but not to exceed 3,000 gross tons.	The greater of $2,000,000 or $1,200 per gross ton.
Tank vessel (except a tank vessel on which no liquid hazardous material in bulk is being carried as cargo or cargo residue, and on which the only oil carried as cargo or cargo residue is an animal fat or vegetable oil, as those terms are used in section 2 of the Edible Oil Regulatory Reform Act (Pub. L. 104-55))	Over 3,000 gross tons.	The greater of $10,000,000 or $1,200 per gross ton.
Vessel other than a tank vessel (specified above)	Over 300 gross tons. *	The greater of $500,000 or $600 per gross ton.

* This minimum gross ton limit does not apply to any vessel using the waters of the U.S. Exclusive Economic Zone to transship or lighter oil destined for a place subject to the jurisdiction of the United0 States (as specified in 33 CFR 138.12(a)(1)).

CG-5586-3

4

(II) Applicable Amount Under the **Comprehensive Environmental Response, Compensation, and Liability Act**, as Amended.

VESSEL TYPE	APPLICABLE AMOUNT
Vessel over 300 gross tons carrying hazardous substance as cargo	The greater of $5,000,000 or $300 per gross ton.
Any other vessel over 300 gross tons	The greater of $500,000 or $300 per gross ton.

(III) Total Applicable Amount = Maximum applicable amount calculated under (I) plus maximum applicable amount calculated under (II).

SCHEDULE A

VESSELS INITIALLY LISTED

VESSEL	GROSS TONS	OPERATOR

SCHEDULE B

VESSELS ADDED IN ACCORDANCE WITH CLAUSE 4

VESSEL	GROSS TONS	OPERATOR	DATE ADDED

CG–5586–3 Financial Guaranty No. _____

7

[CGD 91–005, 61 FR 9296, Mar. 7, 1996]

APPENDIX F TO PART 138—MASTER FINANCIAL GUARANTY FORM

FINANCIAL GUARANTY NO._____

DEPARTMENT OF TRANSPORTATION
U.S. COAST GUARD
CG-5586-4

MASTER FINANCIAL GUARANTY FURNISHED AS EVIDENCE OF FINANCIAL RESPONSIBILITY FOR BUILDERS, REPAIRERS, SCRAPPERS OR SELLERS OF VESSELS UNDER THE OIL POLLUTION ACT OF 1990 AND THE COMPREHENSIVE ENVIRONMENTAL RESPONSE, COMPENSATION, AND LIABILITY ACT, AS AMENDED

1. _____
(Name of Builder, Repairer, Scrapper or Seller)
is in, or from time to time may come into, possession of a vessel or vessels ("Vessel" or "Vessels") held for purposes of construction, repair, scrapping, or sale, and desires to establish evidence of financial responsibility for itself and any owner and demise charterer (collectively referred to as "Operator") of each Vessel in accordance with the Oil Pollution Act of 1990 ("OPA 90") and the Comprehensive Environmental Response, Compensation, and Liability Act, as amended ("CERCLA") (referred to collectively as the "Acts"). The undersigned Financial Guarantor or Guarantors ("Guarantor") hereby guarantees, subject to the provisions hereof, to discharge the Operator's liability with respect to each Vessel for costs and damages under section 1002 of OPA 90, as limited by section 1004(a), or section 107(a)(1) of CERCLA, as limited by sections 107(c)(1)(A) and (B), or both, in an amount equal to the total applicable amount determined in accordance with the Applicable Amount Table below. The Operator and the Guarantor agree that if at the time of an incident, release, or threatened release a covered vessel is a tank vessel or is carrying a hazardous substance as cargo, the limit of liability of the Guarantor hereunder shall be the total applicable amount appropriate for such vessel determined in accordance with the Applicable Amount Table below. The amount and scope of liability are not further conditioned or dependent in any way upon any contract, agreement or understanding between the Operator and the Guarantor. The Guarantor shall furnish written notice to the Director, Coast Guard National Pollution Funds Center ("Center"), of all judgments rendered and payments made by the Guarantor under this Financial Guaranty.

2. Any claim, including any claim by right of subrogation, against the Operator for costs and damages arising under either section 1002 of OPA 90 as limited by section 1004(a), or section 107(a)(1) of CERCLA as limited by sections 107(c)(1)(A) and (B), or both, may be brought directly against the Guarantor and the Guarantor consents to suit with respect to these claims. However, in any direct action under OPA 90 the Guarantor's

liability per vessel per incident shall not exceed the amount determined under part I of the Applicable Amount Table below and, in any direct action under CERCLA the Guarantor's liability per vessel per release or threatened release shall not exceed the amount determined under part II of the Applicable Amount Table below. The Guarantor's obligation hereunder with respect to any one incident or release or threatened release shall be reduced by all payments or succession of payments for costs and damages, to one or more claimants, made by or on behalf of the Operator under OPA 90 or CERCLA or both, as applicable, for which the Operator is liable. The Guarantor shall be entitled to invoke only the following rights and defenses in any direct action:

(1) The incident, release, or threatened release was caused by the willful misconduct of the Operator.

(2) Any defense that the Operator may raise under the Acts.

(3) A defense relating to the amount of a claim or claims, filed in any action in any court or other proceeding, that exceeds the amount of this Guaranty with respect to an incident or with respect to a release or threatened release.

(4) A defense relating to the amount of a claim or claims that exceeds the amount of this Guaranty, which amount is based on the gross tonnage of the covered vessel as entered on the Vessel's International Tonnage Certificate or other official, applicable certificate of measurement, except where the guarantor knew or should have known that the applicable tonnage certificate was incorrect.

(5) The claim is not one made under either of the Acts.

3. The Guarantor's liability under this Guaranty shall attach only in relation to each incident, release, or threatened release occurring on or after the effective date and before the termination date of this Guaranty. The termination date is 30 days after the date of receipt by the Center of written notice that the Guarantor has elected to terminate this Guaranty and has so notified the Operator. Termination of this Guaranty shall not affect the liability of the Guarantor in connection with an incident, release, or threatened release occurring prior to the date the termination becomes effective.

4. The Guarantor designates _____,
(Name of Agent)

with offices at _____

_____,

as the Guarantor's agent in the United States for service of process for purposes of this Guaranty and for receipt of notices

of designation and presentations of claims under the Acts. If the designated agent cannot be served due to death, disability, or unavailability, the Director, National Pollution Funds Center, is the agent for these purposes.

5. No more than four Financial Guarantors may execute this Guaranty. If more than one Guarantor executes this Guaranty, each Guarantor binds itself jointly and severally for the purpose of allowing a joint action or actions against any or all of the Guarantors, and for all other purposes each Guarantor binds itself, jointly and severally with the Operator, for the payment of the percentage of sums only as is set forth opposite the name of the Guarantor. If no percentage is indicated for a Guarantor or Guarantors, the liability of such Guarantor or Guarantors shall be joint and several for the total of the unspecified portions.

_____
(Name of lead guarantor)

is designated as the lead guarantor having authority to bind all guarantors for actions of guarantors under the Acts, including but not limited to receipt of designation of source, advertisement of a designation, and receipt and settlement of claims (inapplicable if only one Financial Guarantor executes this Guaranty).

6. Title 33 CFR part 138 governs this Financial Guaranty.

EFFECTIVE DATE: _____
(Month/Day/Year and Place of Execution)

_____
(Typed Name of Guarantor)

_____
(Address of Guarantor)

_____

_____
(Percentage of Participation)

By: _____
(Signature)

_____
(Type Name and Title of Person Signing Above)

[NOTE: For each co-Guarantor, provide information in the same manner as for Guarantor above.]

CG-5586-4

APPLICABLE AMOUNT TABLE

(I) Applicable Amount Under the Oil Pollution Act of 1990

VESSEL TYPE	VESSEL'S GROSS TONS	APPLICABLE AMOUNT
Tank vessel (except a tank vessel on which no liquid hazardous material in bulk is being carried as cargo or cargo residue, and on which the only oil carried as cargo or cargo residue is an animal fat or vegetable oil, as those terms are used in section 2 of the Edible Oil Regulatory Reform Act (Pub. L. 104-55))	Over 300 gross tons* but not to exceed 3,000 gross tons.	The greater of $2,000,000 or $1,200 per gross ton.
Tank vessel (except a tank vessel on which no liquid hazardous material in bulk is being carried as cargo or cargo residue, and on which the only oil carried as cargo or cargo residue is an animal fat or vegetable oil, as those terms are used in section 2 of the Edible Oil Regulatory Reform Act (Pub. L. 104-55))	Over 3,000 gross tons.	The greater of $10,000,000 or $1,200 per gross ton.
Vessel other than a tank vessel (specified above)	Over 300 gross tons. *	The greater of $500,000 or $600 per gross ton.

* This minimum gross ton limit does not apply to any vessel using the waters of the U.S. Exclusive Economic Zone to transship or lighter oil destined for a place subject to the jurisdiction of the United States (as specified in 33 CFR 138.12(a)(1)).

CG-5586-4

4

(II) Applicable Amount Under the Comprehensive Environmental Response, Compensation, and Liability Act, as Amended.

VESSEL TYPE	APPLICABLE AMOUNT
Vessel over 300 gross tons carrying hazardous substance as cargo	The greater of $5,000,000 or $300 per gross ton.
Any other vessel over 300 gross tons	The greater of $500,000 or $300 per gross ton.

(III) Total Applicable Amount = Maximum applicable amount calculated under (I) plus maximum applicable amount calculated under (II).

CG-5586-4

5

[CGD 91–005, 61 FR 9303, Mar. 7, 1996]

INDEX TO SUBCHAPTER M—MARINE POLLUTION FINANCIAL RESPONSIBILITY AND COMPENSATION

EDITORIAL NOTE: This listing is provided for informational purposes only. It is compiled and kept up-to-date by the Coast Guard, Department of Transportation.

Section

A

Access, Denial, and Detention
- Appeal provisions 135.405
- Certificates of Financial Responsibility, access to vessel 135.401
- Certificates of Financial Responsibility, sanctions for failure to produce 135.403

Advertisement, designation of source
- Advertisement determinations 136.309
- Contents of 136.313
- Definitions 136.303
- Denial of designation 136.307
- Notice of designation 136.305
- Purpose 136.301
- Types of 136.311

Applicability, Financial Responsibility for Water Pollution (vessels) 138.12

Applicability, Offshore Oil Pollution Compensation Fund 135.3

Applicability, Offshore Facilities, financial responsibility for 135.201

Applications
- Fees 130.13
- General instructions 130.6, 138.60
- Time to apply 130.5
- Where to apply and obtain forms 130.4

C

Certificates
- Denial or revocation 130.12, 138.120
- Enforcement 130.14, 138.140
- Fees 138.130
- Forms and where to apply 138.40
- Individual and Fleet 138.90
- Individual 130.9
- Issuance and carriage 138.65
- Master 130.11, 138.110
- Renewal 130.7, 138.70
- Time to apply 138.50

Claims, particular procedures for Government Public Services
- Allowable compensation 136.241
- Authorized claimants 136.237
- Proof 136.239

Claims, particular procedures for Government Revenues
- Allowable compensation 136.229
- Authorized claimants 136.225

Proof 136.227
Claims, particular procedures for Natural Resources
Allowable compensation 136.211
Authorized claimants 136.207
Proof 136.209
Claims, particular procedures for Profits and Earning Capacity
Allowable compensation 136.235
Authorized claimants 136.231
Proof 136.233
Claims, particular procedures for Real or Personal Property
Allowable compensation 136.217
Authorized claimants 136.213
Proof 136.215
Claims, particular procedures for Removal Costs
Allowable compensation 136.205
Authorized claimants 136.201
Proof 136.203
Claims, particular procedures for Subsistence Use
Allowable compensation 136.223
Authorized claimants 136.219
Proof 136.221
Conduct of removal actions 133.17

D

Dates 130.0
Definitions 130.2, 133.3, 135.5, 136.5, 138.20

E

Evidence of Financial Responsibility
Guaranty as evidence 135.209
Insurance as evidence 135.207
Indemnity as evidence 135.210
Submission of 135.204
Surety bond as evidence 135.211

F

Falsification of claims 136.9
Fees
Levy and payment of barrel fee on OCS oil 135.103
Purpose 135.101
Financial Responsibility
Amount required 135.203
Applicability 135.201
Certification 135.215
Certificates, denial, or revocation 135.223
Guaranty as evidence 135.209
Insurance as evidence 135.207
Indemnity as evidence 135.210
Methods of establishing 135.205
Notification of changes affecting certification 135.219
Qualification as self-insurer 135.213
Reapplication for certification 135.221
Submission of evidence 135.204
Surety bond as evidence 135.211
Financial responsibility for water pollution (vessels) ..... Part 138
Financial responsibility for water pollution ..... Part 130

Index

Financial responsibility, how established 130.8
  Additional submissions 130.8
  Direct action 130.8
  Failure to submit 130.8
  Forms, general 130.8
  General 130.8
  Guaranty 130.8
  Initial and annual submissions 130.8
  Insurance 130.8
  Public access 130.8
  Self-insurance 130.8
  Semi-annual submissions 130.8
  Time for submissions 130.8
Foreign claimants 136.7
Forms
  Application ..... Appendix A to Part 138
  Financial Guaranty ..... Appendix E to Part 138
  Insurance Guaranty ..... Appendix B to Part 138
  Master Financial Guaranty ..... Appendix F to Part 138
  Master Insurance Guaranty ..... Appendix C to Part 138
  Surety Bond Guaranty ..... Appendix D to Part 138
Fund
  Address 135.9
  Administrator, delegation 135.7
Funding
  Determination of eligibility for 133.15
  Removal actions eligible for 133.13

G

General Procedure
  General requirements for a claim 136.105
  Insurance 136.111
  Order of presentment 136.103
  Other compensation 136.113
  Removal costs and multiple items of damages 136.109
  Settlement and notice to claimant 136.115
  Subrogated claims 136.107
  Time limitations on claims 136.101

I

Implementation schedule 138.15
Information 136.3
Investigation to determine the source and responsible party 133.23

N

Non-owning operator's responsibility for identification 138.100
Notification of Governor's designee 133.25
Notification of pollution incidents 135.303

O

Offshore oil pollution compensation fund ..... Part 135
Oil spill liability trust fund; claims, procedures; Designation of source;
  and advertisement ..... Part 136
Oil spill liability trust fund; state access ..... Part 133

R

Recordkeeping 133.19
Retention 133.21
Requests
  Amount 133.7
  Contents 133.11
  General 133.5
  Where made 133.9

S

Scope 130.1
Service of Process 130.15, 138.150

SUBCHAPTER N—OUTER CONTINENTAL SHELF ACTIVITIES

PART 140—GENERAL

Subpart A—General

Sec.
140.1 Purpose.
140.3 Applicability.
140.4 Relationship to other law.
140.5 Exemptions during construction.
140.7 Incorporation by reference.
140.10 Definitions.
140.15 Equivalents and approved equipment.
140.20 Delegations.
140.25 Appeals.
140.30 Judicial review.
140.35 Sanctions.
140.40 Processing penalty cases.

Subpart B—Inspections

140.101 Inspection by Coast Guard marine inspectors.
140.103 Annual inspection of fixed OCS facilities.
140.105 Correction of deficiencies and hazards.

Subpart C—Investigations

140.201 General.
140.203 Investigation procedures.
140.205 Subpoenas.

AUTHORITY: 43 U.S.C. 1333, 1348, 1350, 1356; 49 CFR 1.46.

SOURCE: CGD 78–160, 47 FR 9376, Mar. 4, 1982, unless otherwise noted.

Subpart A—General

§ 140.1 Purpose.

This subchapter is intended to promote safety of life and property on Outer Continental Shelf (OCS) facilities, vessels, and other units engaged in OCS activities, protect the marine environment, and implement the Outer Continental Shelf Lands Act (43 U.S.C. 1331 et seq.), as amended by the Outer Continental Shelf Lands Act Amendments of 1978 (Pub. L. 95–372, 92 Stat. 629).

§ 140.3 Applicability.

Unless otherwise stated, this subchapter applies to OCS facilities, vessels, and other units engaged in OCS activities as the term ''OCS activities'' is defined in § 140.10. This subchapter does not apply to pipelines and deepwater ports (as the term ''deepwater port'' is defined in section 3(10) of the Deepwater Port Act of 1974 (33 U.S.C. 1502)).

§ 140.4 Relationship to other law.

(a) Design and equipment requirements of this subchapter for OCS facilities, including mobile offshore drilling units in contact with the seabed of the OCS for exploration or exploitation of subsea resources, are in addition to the regulations and orders of the U.S. Geological Survey applicable to those facilities.

(b) Any apparent conflict between the application of any requirement of this subchapter and any regulation or order of the U.S. Geological Survey should immediately be brought to the attention of the Officer in Charge, Marine Inspection.

(c) This subchapter does not establish design requirements for fixed OCS facilities or regulate drilling or production equipment on any OCS facility or attending vessel, except for matters affecting navigation or workplace safety or health.

§ 140.5 Exemptions during construction.

The Officer in Charge, Marine Inspection, may exempt any unit under construction from any requirements of this subchapter that would be impracticable or unreasonable to apply during construction or erection of the unit.

§ 140.7 Incorporation by reference.

(a) Certain materials are incorporated by reference into this subchapter with the approval of the Director of the Federal Register in accordance with 5 U.S.C. 552(a). To enforce any edition other than the one listed in paragraph (b) of this section, notice of the change must be published in the FEDERAL REGISTER and the material made available to the public. All approved material is on file at the Office of the Federal Register, 800 North Capitol Street, NW., suite 700, Washington, DC and at U.S. Coast Guard, Office of Compliance (G–MOC), 2100 Second Street, SW., Washington, DC 20593–0001

and is available from the sources indicated in paragraph (b) of this section.

(b) The material approved for incorporation by reference in this subchapter and the sections affected are as follows:

American National Standards Institute (ANSI)	
11 West 42nd Street, New York, NY 10036.	
ANSI A10.14–1975—Requirements for Safety Belts, Harnesses, Lanyards, Lifelines, and Drop Lines for Construction and Industrial Use.	142.42
ANSI/UL1123–1987—Standard for Marine Buoyant Devices.	143.405
ANSI Z41–1983—American National Standard for Personal Protection-Protective Footwear.	142.33
ANSI Z87.1–1979—Practice for Occupational and Educational Eye and Face Protection.	142.27
ANSI Z88.2–1980—Practices for Respiratory Protection.	142.39
ANSI Z89.1–1981—Safety Requirements for Industrial Head Protection.	142.30
International Maritime Organization (IMO)	
IMO Sales, New York Nautical Instrument and Service Corp., 140 W. Broadway, New York, NY 10013	
IMO Assembly Resolution A.414 (XI) Code for Construction and Equipment of Mobile Offshore Drilling Units.	143.207; 146.205

[CGD 84–098b, 54 FR 21571, May 18, 1989, as amended by CGD 96–026, 61 FR 33665, June 28, 1996]

§ 140.10 Definitions.

As used in this subchapter:

Act means the Outer Continental Shelf Lands Act of 1953 (43 U.S.C. 1331 et seq.), as amended by the Outer Continental Shelf Lands Act Amendments of 1978 (Pub. L. 95–372).

Approved means approved by the Commandant, unless otherwise indicated.

Attending vessel means a vessel which is moored close to and readily accessible from an OCS facility for the purpose of providing power, fuel, or other services to the operation being conducted on the facility.

Commandant means Commandant of the Coast Guard or that person's authorized representative.

Development means those activities which take place following discovery of minerals in paying quantities, including, but not limited to, geophysical activity, drilling, and platform construction, and which are for the purpose of ultimately producing the minerals discovered.

District Commander means an officer who commands a Coast Guard District described in part 3 of this chapter or that person's authorized representative.

Exploration means the process of searching for minerals, including, but not limited to, (1) geophysical surveys where magnetic, gravity, seismic, or other systems are used to detect or imply the presence of such minerals, and (2) any drilling, whether on or off known geological structures, including the drilling of a well in which a discovery of oil or natural gas in paying quantities is made and the drilling of any additional delineation well after the discovery which is needed to delineate any reservoir and to enable the lessee to determine whether to proceed with development and production.

Fixed OCS facility means a bottom founded OCS facility permanently attached to the seabed or subsoil of the OCS, including platforms, guyed towers, articulated gravity platforms, and other structures.

Floating OCS facility means a buoyant OCS facility securely and substantially moored so that it cannot be moved without a special effort. This term includes tension leg platforms and permanently moored semisubmersibles or shipshape hulls but does not include mobile offshore drilling units and other vessels.

Investigating officer means a person assigned by the Commandant, a District Commander, or an Officer in Charge, Marine Inspection, to conduct an investigation of an accident, casualty, or other incident.

Manned facility means an OCS facility on which people are routinely accommodated for more than 12 hours in successive 24 hour periods.

Manned platform means a fixed OCS facility on which people are routinely accommodated for more than 12 hours in successive 24 hour periods.

Marine inspector means a person designated as such by an Officer in Charge, Marine Inspection, to perform inspections of units to determine whether or not the requirements of laws administered by the Coast Guard and of Coast Guard regulations are met.

Minerals includes oil, gas, sulphur, geopressured-geothermal and associated resources, and all other minerals which are authorized by an Act of Congress to be produced from ''public lands'' as defined in section 103 of the Federal Lands Policy and Management Act of 1976 (43 U.S.C. 1702(e)).

Mobile offshore drilling unit or *MODU* means a vessel, other than a public vessel of the United States, capable of engaging in drilling operations for exploration or exploitation of subsea resources.

Officer in Charge, Marine Inspection means a person who commands a Marine Inspection Zone described in Part 3 of this chapter and who is immediately responsible for the performance of duties with respect to inspections, enforcement, and administration of regulations governing units.

Operator means—(1) In the case of a vessel, a charterer by demise or any other person who is responsible for the operation, manning, victualing, and supplying of the vessel; or

(2) In the case of an OCS facility, the operator as defined in 30 CFR 250.2(gg).

Outer Continental Shelf or *OCS* means all submerged lands lying seaward and outside of the area of ''lands beneath navigable waters'' as defined in section 2(a) of the Submerged Lands Act (43 U.S.C. 1301(a)) and of which the subsoil and seabed appertain to the United States and are subject to its jurisdiction and control.

OCS activity means any offshore activity associated with exploration for, or development or production of, the minerals of the Outer Continental Shelf.

OCS facility means any artificial island, installation, or other device permanently or temporarily attached to the subsoil or seabed of the Outer Continental Shelf, erected for the purpose of exploring for, developing, or producing resources therefrom, or any such installation or other device (other than a ship or vessel) for the purpose of transporting such resources. The term includes mobile offshore drilling units when in contact with the seabed of the OCS for exploration or exploitation of subsea resources. The term does not include any pipeline or deepwater port (as the term ''deepwater port'' is defined in section 3(10) of the Deepwater Port Act of 1974 (33 U.S.C. 1502)).

Owner means a person holding title to or, in the absence of title, other indicia of ownership of a unit; however, this does not include a person who holds indicia of ownership primarily to protect a security interest in the unit and does not participate in the management or operation of the unit.

Person means an individual, association, partnership, consortium, joint venture, private, public, or municipal firm or corporation, or a government entity.

Person in charge means the master or other individual designated as such by the owner or operator under § 146.5 of this subchapter or 46 CFR 109.107.

Personnel means individuals who are employed by leaseholders, permit holders, operators, owners, contractors, or subcontractors and who are on a unit by reason of their employment.

Production means those activities which take place after the successful completion of any means for the removal of minerals, including, but not limited to, such removal, field operations, transfer of minerals to shore, operation monitoring, maintenance, and workover.

Rebuilt means having had substantial alteration or reconstruction of the hull or principal structural component.

Standby vessel means a vessel meeting the requirements of Part 143, Subpart E, of this chapter and specifically designated in an Emergency Evacuation Plan under §§ 146.140 or 146.210 of this chapter to provide rapid evacuation assistance in the event of an emergency.

Unit means any OCS facility, vessel, rig, platform, or other vehicle or structure, domestic or foreign.

Unmanned facility means an OCS facility, other than a floating facility or

mobile offshore drilling unit, which is not a manned facility even though it may be continuously serviced by an attending vessel.

Unmanned platform means a fixed, bottom-founded OCS facility which is not a manned facility even though it may be continuously serviced by an attending vessel.

Vessel means every description of watercraft or other artificial contrivance used, or capable of being used, as a means of transportation on water.

[CGD 78–160, 47 FR 9376, Mar. 4, 1982, as amended by CGD 79–077, 51 FR 25059, July 10, 1986; CGD 84–098b, 54 FR 21571, May 18, 1989]

§ 140.15 Equivalents and approved equipment.

(a) The use of alternate equipment or procedures for those specified in this subchapter may be permitted by an Officer in Charge, Marine Inspection, to the extent and upon conditions as will insure a degree of safety comparable to or greater than that provided by the minimum standards in this subchapter.

(b) Where equipment in this subchapter is required to be of an approved type, the equipment requires the specific approval of the Commandant. Approvals are published in the FEDERAL REGISTER and COMDTINST M16714.3 (Series) Equipment List, available from Commandant (G–MSE), U.S. Coast Guard, Washington, DC 20593–0001.

(c) Specifications for certain items required to be of an approved type are contained in 46 CFR Parts 160 through 164.

[CGD 78–160, 47 FR 9376, Mar. 4, 1982, as amended at CGD 88–052, 53 FR 25121, July 1, 1988; CGD 96–026, 61 FR 33665, June 28, 1996]

§ 140.20 Delegations.

(a) Each District Commander is responsible for the administration and enforcement of the regulations in this subchapter within that person's assigned district.

(b) Under the general superintendence of the District Commander, the Officer in Charge, Marine Inspection, is delegated authority to administer and enforce the regulations in this subchapter.

(c) Authority delegated under this section may be redelegated as necessary by the delegate.

§ 140.25 Appeals.

(a) Any person directly affected by an action or decision of an Officer in Charge, Marine Inspection, under the Act or the regulations in this subchapter may request reconsideration of that action or decision. If still dissatisfied, that person may appeal the action or decision of the Officer in Charge, Marine Inspection, within 30 days to the District Commander of the District in which the action was taken or the decision made. The District Commander issues a decision after reviewing the appeal submitted under this paragraph.

(b) Any person not satisfied with the decision of a District Commander may appeal that decision within 30 days to the Commandant, who issues a ruling after reviewing the appeal submitted under this paragraph. Rulings of the Commandant constitute final agency action.

(c) An appeal to the District Commander or Commandant:

(1) Must be made in writing, except in an emergency when an oral appeal may be accepted;

(2) Must be submitted to the District Commander of the District in which the action was taken or the decision made;

(3) Must describe the decision or action being appealed;

(4) Must state the reasons why the action or decision should be set aside or modified; and

(5) May contain any supporting documents and evidence that the appellant wishes to have considered.

(d) Pending determination of any appeal, the action or decision appealed remains in effect, unless suspended by the District Commander to whom the appeal was made or by the Commandant.

§ 140.30 Judicial review.

(a) Nothing in this subchapter shall be construed to prevent any interested party from seeking judicial review as authorized by law.

(b) Judicial review of the regulations in this subchapter, or any final ruling

or order of the Commandant or that person's delegate pursuant to the Act or the regulations in this subchapter, is governed by the judicial review provisions of section 23 of the Act (43 U.S.C. 1349).

§ 140.35 Sanctions.

(a) Any person who fails to comply with:

(1) Any provision of the Act;

(2) Any regulation in this subchapter; or

(3) Any order issued under the Act or the regulations in this subchapter by the Commandant, a District Commander, or an Officer in Charge, Marine Inspection, after notice of the failure and after expiration of any reasonable period allowed for corrective action, shall be liable for a civil penalty for each day of the continuance of the failure.

(b) Any person who knowingly and willfully:

(1) Violates any provision of the Act;

(2) Violates any regulation in this subchapter designed to protect health, safety, or the environment;

(3) Violates any order of the Commandant, District Commander, or Officer in Charge, Marine Inspection, issued under the Act or the regulations in this subchapter that is designed to protect health, safety, or the environment;

(4) Makes any false statement, representation, or certification in any application, record, report, or other document filed or required to be maintained under the Act or the regulations in this subchapter;

(5) Falsifies, tampers with, or renders inaccurate any monitoring device or method of record required to be maintained under this Act or the regulations in this subchapter; or

(6) Reveals any data or information required to be kept confidential by the Act shall, upon conviction, be punished by a fine of not more than $100,000, or by imprisonment for not more than ten years, or both. Each day that a violation under paragraph (b)(1), (b)(2), or (b)(3) of this section continues, or each day that any monitoring device or data recorder remains inoperative or inaccurate because of any activity described in paragraph (b)(5) of this section, constitutes a separate violation.

(c) Whenever a corporation or other entity is subject to prosecution under paragraph (b) of this section, any officer or agent of the corporation or entity who knowingly and willfully authorized, ordered, or carried out the prescribed activity shall be subject to the same fines or imprisonment, or both, as provided for under paragraph (b) of this section.

(d) The penalties prescribed in this section are concurrent and cumulative and the exercise of one does not preclude the exercise of the others. Further, the penalties prescribed in this section are in addition to any other penalties afforded by any other law or regulation.

[CGD 78–160, 47 FR 9376, Mar. 4, 1982, as amended by CGD 96–052, 62 FR 16703, Apr. 8, 1997]

§ 140.40 Processing penalty cases.

Apparent violations of the regulations in this subchapter are processed in accordance with subpart 1.07 of 33 CFR part 1 on civil and criminal penalty proceedings, except as follows:

(a) The District Commander refers civil penalty cases to the Secretary of the Interior, or that person's delegate, who, under the Act, assesses, collects, and compromises civil penalties.

(b) If a possible violation investigated by the Coast Guard carries both a civil and a criminal penalty, the District Commander determines whether to refer the case to the U.S. Attorney for criminal prosecution or to the Secretary of the Interior, or that person's delegate, for civil penalty proceedings.

(c) When the U.S. Attorney declines to institute criminal proceedings, the District Commander decides whether to refer the case to the Secretary of the Interior, or that person's delegate, for civil penalty proceedings or to close the case.

Subpart B—Inspections

§ 140.101 Inspection by Coast Guard marine inspectors.

(a) Each unit engaged in OCS activities is subject to inspection by the Coast Guard.

(b) Under the direction of the Officer in Charge, Marine Inspection, marine inspectors may inspect units engaged in OCS activities to determine whether the requirements of this subchapter are met. These inspections may be conducted with or without advance notice at any time deemed necessary by the Officer in Charge, Marine Inspection.

(c) As part of an inspection, a marine inspector may review records and require and observe the conduct of emergency drills and other tests and procedures as may be necessary to demonstrate to that person's satisfaction that the unit and its equipment are in full compliance with applicable Coast Guard regulations. The marine inspector consults with the person in charge of the unit before requiring a drill or other test or procedure to be conducted to minimize disruption of unit activities and risk to life or property.

(d) Coast Guard inspections of foreign units recognize valid international certificates accepted by the United States, including Safety of Life at Sea (SOLAS), Loadline, and Mobile Offshore Drilling Unit (MODU) Code certificates for matters covered by the certificates, unless there are clear grounds for believing that the condition of the unit or its equipment does not correspond substantially with the particulars of the certificate.

(e) Coast Guard marine inspectors conduct an initial inspection of each fixed OCS facility installed after June 27, 1988, to determine whether the facility is in compliance with the requirements of this subchapter.

[CGD 78–160, 47 FR 9376, Mar. 4, 1982, as amended by CGD 84–098a, 53 FR 18980, May 26, 1988]

§ 140.103 Annual inspection of fixed OCS facilities.

(a) The owner or operator of each fixed OCS facility shall ensure that the facility is inspected, at intervals not to exceed 12 months, to determine whether the facility is in compliance with the requirements of this subchapter.

(b) Except for initial inspections under § 140.101(e), inspections by Coast Guard Marine inspectors do not meet the requirements for an inspection under paragraph (a) of this section.

(c) Except for initial inspections under § 140.101(e), the results of the inspection must be recorded on Form CG–5432. Forms CG–5432 may be obtained from the Officer in Charge, Marine Inspection. The owner or operator shall submit the completed Form CG–5432 to the Officer in Charge, Marine Inspection, within 30 days after completion of the inspection.

(d) For facilities installed on the OCS after June 27, 1988, the 12 month period under paragraph (a) of this section begins with the initial inspection under § 140.101(e). For facilities on the OCS on June 27, 1988, the 12 month period begins upon completion of the first inspection under paragraph (a) of this section, which inspection must be completed within 12 months after June 27, 1988. Before September 26, 1988, the owner or operator shall notify the Officer in Charge, Marine Inspection, of the proposed inspection date for each facility.

[CGD 84–098a, 53 FR 18980, May 26, 1988]

§ 140.105 Correction of deficiencies and hazards.

(a) Lifesaving and fire fighting equipment which is found defective during an inspection and which, in the opinion of the inspector, cannot be satisfactorily repaired must be so mutilated in the presence of the inspector that it cannot be used for the purpose for which it was originally intended. Lifesaving and fire fighting equipment subsequently determined to be unrepairable must be similarly mutilated in the presence of the person making that determination.

(b) Any deficiency or hazard discovered during an inspection by a Coast Guard marine inspector is reported to the unit's owner or operator, who shall have the deficiency or hazard corrected or eliminated as soon as practicable and within the period of time specified by the Coast Guard marine inspector.

(c) Deficiencies and hazards discovered during an inspection of a fixed OCS facility under § 140.103(a) must be corrected or eliminated, if practicable, before the Form CG–5432 is submitted

to the Officer in Charge, Marine Inspection (OCMI). Deficiencies and hazards that are not corrected or eliminated by the time the Form is submitted must be indicated on the Form as ''outstanding.'' For lifesaving and firefighting equipment deficiencies that cannot be corrected before the submission of Form CG–5432, the owner or operator shall contact the OCMI to request a time period for repair of the item. The owner or operator shall include a description of the deficiency and the time period specified by the OCMI for correction of the deficiency in the comment section of Form CG–5432. Upon receipt of a Form CG–5432 indicating outstanding deficiencies or hazards, the OCMI informs, by letter, the owner or operator of the fixed OCS facility of the deficiencies or hazards and the time period specified to correct or eliminate the deficiencies or hazards.

(d) Where a deficiency or hazard remains uncorrected or uneliminated after the expiration of the time specified for correction or elimination, the Officer in Charge, Marine Inspection, initiates appropriate enforcement measures.

[CGD84–098a, 53 FR 18981, May 26, 1988]

Subpart C—Investigations

§ 140.201 General.

Under the direction of the Officer in Charge, Marine Inspection, investigating officers investigate the following incidents occurring as a result of OCS activities:

(a) Death.

(b) Injury resulting in substantial impairment of any bodily unit or function.

(c) Fire which causes death, serious injury or property damage exceeding $25,000.

(d) Oil spillage exceeding two hundred barrels of oil in one occurrence during a thirty-day period.

(e) Other injuries, casualties, accidents, complaints of unsafe working conditions, fires, pollution, and incidents occurring as a result of OCS activities as the Officer in Charge, Marine Inspection, deems necessary to promote the safety of life or property or protect the marine environment.

§ 140.203 Investigation procedures.

(a) Insofar as practicable, investigations conducted pursuant to this subchapter shall follow the procedures of 46 CFR Part 4.

(b) Representatives of the U.S. Geological Survey may participate in these investigations. This participation may include, but is not limited to:

(1) Participating in a joint on-scene investigation;

(2) Making recommendations concerning the scope of the investigation;

(3) Calling and examing witnesses; and

(4) Submitting or requesting additional evidence.

(c) Reports of investigations conducted under this subchapter shall be made available to parties to the investigation and the public upon completion of agency action.

§ 140.205 Subpoenas.

(a) In any investigation conducted pursuant to this subchapter, the investigating officer shall have the power to administer necessary oaths, subpoena witnesses, and require the production of books, papers, documents, and any other evidence.

(b) Attendance of witnesses or the production of books, papers, documents, or any other evidence shall be compelled by a process similar to that used in the District Courts of the United States.

PART 141—PERSONNEL

Subpart A—Restrictions on Employment

Sec.

141.1 Purpose.
141.5 Applicability.
141.10 Definitions.
141.15 Restrictions on employment.
141.20 Exemptions from restrictions on employment.
141.25 Evidence of citizenship.
141.30 Evidence of status as a resident alien.
141.35 Records to be kept by the employer.

AUTHORITY: 43 U.S.C. 1356; 49 CFR 1.46(z).

SOURCE: CGD 78–160, 47 FR 9379, Mar. 4, 1982, unless otherwise noted.

Subpart A—Restrictions on Employment

§ 141.1 Purpose.

This subpart prescribes rules governing restrictions on the employment of personnel on units engaged in OCS activities.

§ 141.5 Applicability.

(a) This subpart applies to employment of personnel on units engaged in OCS activities, except as provided in paragraph (b) of this section.

(b) This subpart does not apply to employment of personnel on any:

(1) Vessel subject to the citizenship requirements of 46 U.S.C. 8103 for pilots, licensed officers, and unlicensed crew when the vessel is transiting to or from an OCS facility or a United States port;

(2) Vessel subject to the citizenship requirements of 46 U.S.C. 7102 and 8103 for officers and crew on federally subsidized or documented vessels; or

(3) Unit over 50 percent of which is owned by one or more citizens of a foreign nation or with respect to which one or more citizens of a foreign nation have the right effectively to control, except to the extent and to the degree that the President determines that the government of such foreign nation or any of its political subdivisions has implemented, by statute, regulation, policy, or practice, a national manning requirement for equipment engaged in the exploration, development, or production of oil or gas in its offshore areas.

(c) The Commandant may, upon request or upon that person's own initiative, determine whether over 50 percent of a particular unit is owned by citizens of a foreign nation or whether citizens of a foreign nation have the right effectively to control the unit.

(d) In determining whether ownership or a right effectively to control exists, the Commandant may consider operational control of a unit, management responsibility, title, lease and charter arrangements, and financial interests.

(e) The owner or operator of any unit affected is notified of the Commandant's determination.

(Information collection requirements contained in paragraph (c) were approved by the Office of Management and Budget under OMB control number 2130–0182)

[CGD 78–160, 47 FR 9379, Mar. 4, 1982, as amended by CGD 97–023, 62 FR 33363, June 19, 1997]

§ 141.10 Definitions.

As used in this subpart:

Citizens of the United States means:

(1) In the case of an individual, one who is a native born, derivative, or fully naturalized citizen of the United States;

(2) In the case of a partnership, unincorporated company, or association, one in which 50% or more of the controlling interest is vested in citizens of the United States; or

(3) In the case of a corporation, one which is incorporated under the laws of the United States or of any State thereof.

Citizen of a foreign nation means:

(1) In the case of an individual, one who is not a citizen of the United States;

(2) In the case of a partnership, unincorporated company, or association, one in which more than 50% of the controlling interest is vested in citizens of a nation other than the United States; or

(3) In the case of a corporation, one which is incorporated under the laws of a nation other than the United States so long as (i) the title to a majority of the stock thereof is free from any trust or fiduciary obligation in favor of any citizen of the United States; (ii) the majority of the voting power in the corporation is not vested in any citizen of the United States; (iii) through any contract or understanding, the majority of the voting power may not be exercised directly or indirectly on behalf of any citizen of the United States; or (iv) by no other means, control of the corporation is conferred upon or permitted to be exercised by any citizen of the United States.

Resident alien means an alien lawfully admitted to the United States for permanent residence in accordance with section 101(a)(20) of the Immigration and Nationality Act of 1952, as amended, 8 U.S.C. 1101(a)(20).

§141.15 Restrictions on employment.

(a) Each employer of personnel on any unit engaged in OCS activities that is subject to this part must employ, as members of the regular complement of the unit, only citizens of the United States or resident aliens except as provided by §141.20.

(b) As used in paragraph (a) of this section, ''regular complement of a unit'' means those personnel necessary for the routine functioning of the unit, including marine officers and crew; industrial personnel on the unit, such as toolpushers, drillers, roustabouts, floor hands, crane operators, derrickmen, mechanics, motormen, and general maintenance personnel; and support personnel on the unit, such as cooks, stewards and radio operators. The term does not include specialists, professionals, or other technically trained personnel called in to handle emergencies or other temporary operations; extra personnel on a unit for training; and other personnel temporarily on a unit for specialized operations, such as construction, alteration, well logging, or unusual repairs or emergencies.

(c) The Officer in Charge, Marine Inspection, may determine whether a particular individual or position is part of the regular complement of a unit. A copy of the determination is provided to the owner or operator of the unit affected.

(Approved by the Office of Management and Budget under OMB control number 2130–0182)

[CGD 78–160, 47 FR 9379, Mar. 4, 1982, as amended by USCG–1998–3799, 63 FR 35530, June 30, 1998]

§141.20 Exemptions from restrictions on employment.

(a) An employer may request an exemption from the restrictions on employment in §141.15 in order to employ persons other than citizens of the United States or resident aliens as part of the regular complement of the unit under the following circumstances:

(1) When specific contractual provisions or national registry manning requirements in effect on September 18, 1978 provide that a person other than a citizen of the United States or a resident alien is to be employed on a particular unit.

(2) When there is not a sufficient number of citizens of the United States or resident aliens qualified and available for the work.

(3) When the President determines with respect to a particular unit that the employment of only citizens of the United States or resident aliens is not consistent with the national interest.

(b) The request must be in writing, identify the provision of paragraph (a) of this section relied upon, and:

(1) If involving specific contractual provisions under paragraph (a)(1) of this section, list the persons claimed exempt and contain a copy of the contract;

(2) If involving persons without an H–2 Visa under paragraph (a)(2) of this section, list the persons or positions sought to be exempted; or

(3) If under paragraph (a)(3) of this section, identify the unit involved and contain any information in support of the claim.

(c) Requests must be submitted to the Commandant (G–MOC), U.S. Coast Guard Headquarters, 2100 2nd Street, SW., Washington, D.C. 20593.

(d) Upon receipt of a request under paragraph (a)(2) of this section, the Coast Guard seeks information from the Department of Labor concerning whether there are citizens of the United States or resident aliens qualified and available for work. If information is provided that citizens of the United States or resident aliens are qualified and available, the employer may be required to seek their employment before the request is approved.

(e) Upon receipt of a request under paragraph (a)(3) of this section and after consulting with other Federal agencies as appropriate, the Commandant forwards the request and the comments of the Coast Guard and other interested agencies to the President for determination.

(f) Upon approval by the President for request under paragraph (a)(3) of this section or by the Coast Guard for

all other requests, the Coast Guard issues a certification of the exemption. A certification issued under paragraph (a)(2) of this section is valid for one year from the date of issuance.

(g) If, within 30 days of receipt by the Coast Guard of a request under paragraph (a)(2) of this section, the Coast Guard does not make a determination or advise the employer that additional time for consideration is necessary, the request is considered approved for a period of 90 days from the end of the 30 day period.

(h) A request need not be submitted for persons who are not citizens of the United States or resident aliens and who:

(1) Are employed under the national registry manning requirements exception in paragraph (a)(1) of this section; or

(2) Have been classified and admitted to the United States as temporary workers under 8 U.S.C. 1101(a)(15)(H)(ii) for work in a position for which admitted.

(Approved by the Office of Management and Budget under OMB control number 2130–0182)

[CGD 78–160, 47 FR 9379, Mar. 4, 1982, as amended by CGD 96–026, 61 FR 33665, June 28, 1996]

§ 141.25 Evidence of citizenship.

(a) The employer may accept as sufficient evidence that a person is a citizen of the United States any one of the following documents and no others:

(1) A merchant mariner's document issued by the Coast Guard under 46 CFR Part 12 which shows the holder to be citizen of the United States.

(2) An original or certified copy of a birth certificate or birth registration issued by a state or the District of Columbia.

(3) A United States passport.

(4) A Certificate of Citizenship issued by the Immigration and Naturalization Service.

(5) A Certificate of Naturalization issued by a Naturalization Court.

(6) A letter from the Coast Guard issued under paragraph (d) of this section.

(b) If a person does not have one of the documents listed in paragraphs (a)(1) through (a)(6) of this section, that person may appear in person before an Officer in Charge, Marine Inspection, and submit one or more of the following documents which may be considered as evidence that the applicant is a citizen of the United States:

(1) A Certificate of Derivative Citizenship or a Certificate of Naturalization of either parent and a birth certificate of the applicant or other evidence satisfactorily establishing that the applicant was under 21 years of age at the time of the parent's naturalization.

(2) An original or certified copy of a birth certificate from a political jurisdiction outside the United States which demonstrates citizenship status.

(3) A Baptismal certificate or parish record recorded within one year after birth.

(4) A statement of a practicing physician certifying that the physician attended the birth and has a record showing the date on which the birth occurred.

(5) A commission, or evidence of commission, in the Armed Forces of the United States which shows the holder to be a citizen of the United States.

(6) A continuous discharge book or certificate of identification issued by the Coast Guard or the former Bureau of Marine Inspection, provided the document shows that the applicant produced satisfactory evidence of citizenship at the time the document was issued.

(7) A delayed certificate of birth issued under a state seal, provided there are no collateral facts indicating fraud in its procurement.

(8) A report of the Census Bureau showing the earliest available record of the applicant's age or birth.

(9) Affidavits of parents, relatives, or two or more responsible citizens of the United States, school records; immigration records; insurance policies; or other records which support the citizenship claim.

(c) In any case where doubt exists concerning evidence of citizenship submitted under paragraph (b) of this section, the Officer in Charge, Marine Inspection, may refer the matter to the United States Immigration and Naturalization Service for an advisory opinion.

(d) If the documents submitted under paragraph (b) of this section are determined by the Officer in Charge, Marine Inspection, to be sufficient evidence that the applicant is a citizen of the United States, the Coast Guard issues the applicant a letter acknowledging this determination.

(Approved by the Office of Management and Budget under OMB control number 2130–0182)

§141.30 Evidence of status as a resident alien.

The employer may accept as sufficient evidence that a person is a resident alien any one of the following documents and no others:

(a) A merchant mariner's document issued by the Coast Guard under 46 CFR Part 12.

(b) An alien registration receipt card issued by the Immigration and Naturalization Service certifying that the card holder has been admitted to the United States as an immigrant.

(c) A declaration of intention to become a citizen of the United States issued by the a Naturalization Court.

§141.35 Records to be kept by the employer.

(a) The employer of personnel subject to this subpart shall maintain, and make available to the Coast Guard upon request, a record identifying which of the documents listed in §§141.25 and 141.30 were relied upon for each employee. The record must consist of either a copy of the document or the following information on the document:

(1) For a merchant mariner's document or a United States passport, the document's title and identification number.

(2) For a birth certificate or birth registration, the document's title and the employee's date and place of birth.

(3) For all other documents listed in §§141.25 and 141.30, the document's title and date and place of issuance.

(b) The employer of personnel subject to this subpart shall maintain a written list of the positions that make up the regular complement of the unit and the name and nationality of the individual filling each employee position. This list may be in summary form and any simple format.

(Approved by the Office of Management and Budget under OMB control number 2130–0182)

PART 142—WORKPLACE SAFETY AND HEALTH

Subpart A—General

Sec.
142.1 Purpose.
142.4 Duties of lessees, permittees, and persons responsible for actual operations.
142.7 Reports of unsafe working conditions.

Subpart B—Personal Protective Equipment

142.21 Purpose and applicability.
142.24 Use of equipment.
142.27 Eye and face protection.
142.30 Head protection.
142.33 Foot protection.
142.36 Protective clothing.
142.39 Respiratory protection.
142.42 Safety belts and lifelines.
142.45 Personal flotation devices.
142.48 Eyewash equipment.

Subpart C—General Workplace Conditions

142.81 Purpose and applicability.
142.84 Housekeeping.
142.87 Guarding of deck openings.
142.90 Lockout and tagout.

AUTHORITY: 43 U.S.C 1333(d)(1), 1347(c), 1348(c); 49 CFR 1.46(z).

SOURCE: CGD 79–077, 51 FR 25059, July 10, 1986, unless otherwise noted.

Subpart A—General

§142.1 Purpose.

This part is intended to promote workplace safety and health by establishing requirements relating to personnel, workplace activities and conditions, and equipment on the Outer Continental Shelf (OCS).

§142.4 Duties of lessees, permittees, and persons responsible for actual operations.

(a) Each holder of a lease or permit under the Act shall ensure that all places of employment within the lease area or within the area covered by the permit on the OCS are maintained in compliance with workplace safety and health regulations of this part and, in addition, free from recognized hazards.

(b) Persons responsible for actual operations, including owners, operators, contractors, and subcontractors, shall ensure that those operations subject to their control are conducted in compliance with workplace safety and health regulations of this part and, in addition, free from recognized hazards.

(c) ''Recognized hazards'', in paragraphs (a) and (b) of this section, means conditions which are—

(1) Generally known among persons in the affected industry as causing or likely to cause death or serious physical harm to persons exposed to those conditions; and

(2) Routinely controlled in the affected industry.

§ 142.7 Reports of unsafe working conditions.

(a) Any person may report a possible violation of any regulation in this subchapter or any other hazardous or unsafe working condition on any unit engaged in OCS activities to an Officer in Charge, Marine Inspection.

(b) After reviewing the report and conducting any necessary investigation, the Officer in Charge, Marine Inspection, notifies the owner or operator of any deficiency or hazard and initiates enforcement measures as the circumstances warrant.

(c) The identity of any person making a report under paragraph (a) of this section is not made available, without the permission of the reporting person, to anyone other than those officers and employees of the Department of Transportation who have a need for the record in the performance of their official duties.

Subpart B—Personal Protective Equipment

§ 142.21 Purpose and applicability.

This subpart prescribes requirements concerning personal protection on OCS facilities.

§ 142.24 Use of equipment.

(a) Each holder of a lease or permit issued under the Act shall ensure that all personnel who are required by this subpart to use or wear personal protective equipment do so when within the lease area or the area covered by the permit.

(b) Persons responsible for actual operations shall ensure that all personnel engaged in the operation properly use or wear the personal protective equipment specified by this subpart.

§ 142.27 Eye and face protection.

(a) Personnel engaged in or observing welding, grinding, machining, chipping, handling hazardous materials, or acetylene burning or cutting shall wear the eye and face protector specified for the operation in Figure 8 of ANSI Z87.1.

(b) Eye and face protectors must be maintained in good condition.

(c) Each eye and face protector must be marked with the information required by ANSI Z87.1 for that type of protector.

§ 142.30 Head protection.

(a) Personnel in areas where there is a hazard of falling objects or of contact with electrical conductors shall wear a head protector meeting the specifications of ANSI Z89.1, for the hazard involved.

(b) Each head protector must be marked with the information specified by ANSI Z89.1 for that type of protector and for the hazard involved.

§ 142.33 Foot protection.

(a) Personnel working in areas or engaged in activities where there is a reasonable probability for foot injury to occur shall wear footwear meeting the specifications of ANSI Z41, except when environmental conditions exist that present a hazard greater than that against which the footwear is designed to protect.

(b) Each pair of footwear must be marked with the information specified by ANSI Z41 for the type of footwear.

[CGD 79–077, 51 FR 25059, July 10, 1986, as amended at 51 FR 28381, Aug. 7, 1986]

§ 142.36 Protective clothing.

Personnel in areas where there are flying particles, molten metal, radiant energy, heavy dust, or hazardous materials shall wear clothing and gloves providing protection against the hazard involved.

§142.39 Respiratory protection.

(a) Personnel in an atmosphere specified under ANSI Z88.2, requiring the use of respiratory protection equipment shall wear the type of respiratory protection equipment specified in ANSI Z88.2 for that atmosphere.

(b) Before personnel enter an atmosphere specified under ANSI Z88.2 requiring the use of respiratory protection equipment, the persons listed in §142.4 shall ensure that the personnel entering the atmosphere—

(1) Follow the procedures stated in section 6 of ANSI Z88.2 concerning the proper selection of a respirator and individual fit testing; and

(2) Are trained in the matters set forth in section 7 of ANSI Z88.2 concerning proper use of the equipment to be used and in the generally recognized short and long term harmful effects of exposure to the atmosphere involved.

(c) All respiratory protection equipment must be approved, used, and maintained in accordance with ANSI Z88.2.

[CGD 79–077, 51 FR 25059, July 10, 1986, as amended at 51 FR 28381, Aug. 7, 1986]

§142.42 Safety belts and lifelines.

(a) Except when moving from one location to another, personnel engaged in an activity where there is a hazard of falling 10 or more feet shall wear a safety belt or harness secured by a lanyard to a lifeline, drop line, or fixed anchorage.

(b) Each safety belt, harness, lanyard, lifeline, and drop line must meet the specifications of ANSI A10.14.

§142.45 Personal flotation devices.

Personnel, when working in a location such that, in the event of a fall, they would likely fall into water, shall wear a work vest that meets the requirements of 33 CFR 146.20 or a life preserver that meets the requirements of 46 CFR 160.002, 160.005, or 160.055, except when using the safety belts and lifelines required by §142.42.

§142.48 Eyewash equipment.

Portable or fixed eyewash equipment providing emergency relief must be immediately available near the drill floor, mudrooms, and other areas where there is a reasonable probability that eye injury may occur.

[CGD 79–077, 51 FR 28381, Aug. 7, 1986]

Subpart C—General Workplace Conditions

§142.81 Purpose and applicability.

This subpart prescribes requirements relating to general working conditions on OCS facilities.

§142.84 Housekeeping.

All staging, platforms, and other working surfaces and all ramps, stairways, and other walkways must be kept clear of portable tools, materials, and equipment not in use and be promptly cleared of substances which create a tripping or slipping hazard. When engaged in an activity on the drill floor in which the spillage of drilling fluid is inevitable, such as when pulling wet strings of drill pipe, footwear and flooring designed to reduce slipping substantially may be used instead of keeping the drill floor free of drilling fluid during the activity.

[CGD 79–077, 51 FR 28381, Aug. 7, 1986]

§142.87 Guarding of deck openings.

Openings in decks accessible to personnel must be covered, guarded, or otherwise made inaccessible when not in use. The manner of blockage shall prevent a person's foot or body from inadvertently passing through the opening.

§142.90 Lockout and tagout.

(a) While repair or other work is being performed on equipment powered by an external source, that equipment must be locked out as required in paragraph (b) of this section or, if a lockout provision does not exist on the equipment, must be disconnected from the power source or otherwise deactivated, unless the nature of the work being performed necessitates that the power be connected or the equipment activated.

(b) If the equipment has a lockout or other device designed to prevent unintentional activation of the equipment, the lockout or other device must be engaged while the work is being performed on the equipment, unless the

nature of the work being performed necessitates that the equipment be activated.

(c) A tag must be placed at the point where the equipment connects to a power source and at the location of the control panel activating the power, warning—

(1) That equipment is being worked on; and

(2) If the power source is disconnected or the equipment deactivated, that the power source must not be connected or the equipment activated.

(d) The tags must not be removed without the permission of either the person who placed the tags, that person's immediate supervisor, or their respective reliefs.

[CGD 79–077, 51 FR 25059, July 10, 1986; 51 FR 28382, Aug. 7, 1986]

PART 143—DESIGN AND EQUIPMENT

Subpart A—General

Sec.
143.1 Purpose.
143.15 Lights and warning devices.

Subpart B—OCS Facilities

143.100 Applicability.
143.101 Means of escape.
143.105 Personnel landings.
143.110 Guards and rails.
143.120 Floating OCS facilities.

Subpart C—Mobile Offshore Drilling Units

143.200 Applicability.
143.201 Existing MODUs exempted from new design requirements.
143.205 Requirements for U.S. and undocumented MODUs.
143.207 Requirements for foreign MODUs.
143.210 Letter of compliance.

Subpart D—Vessels

143.300 Applicability.
143.301 Load line requirements.

Subpart E—Standby Vessels

143.400 Applicability.
143.401 Vessel certification and operation.
143.405 Equipment.
143.407 Manning.

AUTHORITY: 43 U.S.C. 1333(d)(1), 1348(c), 1356; 49 CFR 1.46; section 143.210 is also issued under 14 U.S.C. 664 and 31 U.S.C. 9701.

SOURCE: CGD 78–160, 47 FR 9382, Mar. 4, 1982, unless otherwise noted.

Subpart A—General

§ 143.1 Purpose.

This part prescribes design and equipment requirements for units engaged in OCS activities.

§ 143.15 Lights and warning devices.

(a) OCS facilities must meet the lights and warning devices requirements under Part 67 of this chapter concerning aids to navigation on artificial islands and fixed structures.

(b) Vessels, including attending vessels but excluding MODUs under paragraph (a) of this section, must meet the lights and warning devices requirements under the International Regulations for Preventing Collisions at Sea 1972 or under local rules provided for in Rule 1 of those Regulations.

[CGD 78–160, 47 FR 9382, Mar. 4, 1982, as amended by USCG–1998–3799, 63 FR 35530, June 30, 1998]

Subpart B—OCS Facilities

§ 143.100 Applicability.

This subpart applies to OCS facilities except mobile offshore drilling units.

§ 143.101 Means of escape.

(a) ''Primary means of escape'' shall be fixed stairways or fixed ladders of metal construction.

(b) ''Secondary means of escape'' shall be types approved for ''primary means of escape'' or portable, flexible ladders, knotted man ropes, and other devices satisfactory to the Officer in Charge, Marine Inspection.

(c) Manned OCS facilities shall be provided with at least two ''primary means of escape'' extending from the uppermost platform level that contains living quarters or that personnel occupy continuously, to each successively lower working level and to the water surface. Working levels without living quarters, shops, or offices in manned facility structural appendages, extensions, and installations that personnel occupy only occasionally shall be provided with one ''primary means of escape'' and, when necessary in the

opinion of the Officer in Charge, Marine Inspection, one or more ''secondary means of escape.''

(d) Unmanned OCS facilities shall be provided with at least one ''primary means of escape'' extending from the uppermost platform working level to each successively lower working level and to the water surface. When personnel are on board, unmanned facilities shall also be provided with one or more ''secondary means of escape,'' but not more than one will be required for every 10 persons extending from the uppermost working level of the facility to each successively lower working level and to the water surface, excluding facility appendages and installations, unless ''secondary means of escape'' from such appendages and installations are necessary in the opinion of the Officer in Charge, Marine Inspection.

(e) ''Means of escape'' shall be suitably accessible to personnel for rapid facility evacuation.

(f) When two or more ''means of escape'' are installed, at least two shall be located as nearly diagonally opposite each other as practicable unless such requirement is unreasonable or impracticable in the opinion of the Officer in Charge, Marine Inspection.

§ 143.105 Personnel landings.

(a) Sufficient personnel landings shall be provided on each manned OCS facility to assure safe access and egress. When due to special construction personnel landings are not feasible, then suitable transfer facilities to provide safe access and egress shall be installed.

(b) The personnel landings shall be provided with satisfactory illumination. The minimum shall be one-foot candle of artificial illumination as measured at the landing floor and guards and rails.

§ 143.110 Guards and rails.

(a) Except for helicopter landing decks which are provided for in paragraph (b) of this section, and areas not normally occupied, the unprotected perimeter of all floor or deck areas and openings shall be rimmed with guards and rails or wire mesh fence. The guard rail or fence shall be at least 42 inches high. The two intermediate rails shall be so placed that the rails are approximately evenly spaced between the guard rail and the floor or deck area: *Provided,* That if a toe board is installed then one of the intermediate rails may be omitted and the other rail placed approximately half way between the top of the toe board and the top guard rail.

(b) The unprotected perimeter of the helicopter landing deck shall be protected with a device of sufficient strength and size as to prevent any person from falling from such deck.

(c) Each catwalk and each stairway shall be provided with a suitable guard rail or rails, as necessary.

§ 143.120 Floating OCS facilities.

(a) Before construction is started on a proposed floating OCS facility, the owner or operator of the facility must submit to the Coast Guard for approval all plans and information listed in subpart C of 46 CFR part 107 which relate to the facility. All plans and information must be submitted according to the procedures in that subpart.

(b) The facility must comply with the requirements of subchapters F (Marine Engineering) and J (Electrical Engineering) of 46 CFR chapter I and 46 CFR part 108 (Design and Equipment). Where unusual design or equipment needs make compliance impracticable, alternative proposals that provide an equivalent level of safety may be accepted. These requirements do not apply to production systems on the facility.

(c) The Officer in Charge, Marine Inspection, determines whether a floating OCS facility meets the requirements of paragraph (b) of this section and issues a certificate of inspection for each facility which meets these requirements. Inspection of the facility may be required as part of this determination.

Subpart C—Mobile Offshore Drilling Units

§ 143.200 Applicability.

This subpart applies to mobile offshore drilling units when engaged in OCS activities.

§ 143.201 Existing MODUs exempted from new design requirements.

Any mobile offshore drilling unit built before, under construction on, or contracted for prior to April 5, 1982 is not required to meet the design requirements of this subpart until the unit is rebuilt. Until rebuilt, the unit must continue to comply with the design requirements applicable to the unit on April 4, 1982.

[CGD 78–160, 47 FR 11011, Mar. 15, 1982]

§ 143.205 Requirements for U.S. and undocumented MODUs.

Each mobile offshore drilling unit that is documented under the laws of the United States or not documented under the laws of any nation must comply with the design, equipment, and inspection requirements of 46 CFR parts 107 and 108 in order to engage in OCS activities.

§ 143.207 Requirements for foreign MODUs.

Each mobile offshore drilling unit that is documented under the laws of a foreign nation must, when engaged in OCS activities, comply with one of the following:

(a) The design and equipment standards of 46 CFR part 108.

(b) The design and equipment standards of the documenting nation if the standards provide a level of safety generally equivalent to or greater than that provided under 46 CFR part 108.

(c) The design and equipment standards for mobile offshore drilling units contained in the International Maritime Organization (IMO, formerly Inter-Governmental Maritime Consultative Organization or IMCO) (IMO) Code for Construction and Equipment of Mobile Offshore Drilling Units (IMO Assembly Resolution A.414(XI)) which has been incorporated by reference.

§ 143.210 Letter of compliance.

(a) The Officer in Charge, Marine Inspection, determines whether a mobile offshore drilling unit which does not hold a valid Coast Guard Certificate of Inspection meets the requirements of §§ 143.205 or 143.207 relating to design and equipment standards and issues a letter of compliance for each unit which meets the requirements. Inspection of the unit may be required as part of this determination.

(b) A letter of compliance issued under paragraph (a) of this section is valid for one year or until the MODU departs the OCS for foreign operations, whichever comes first.

(c) The owner or operator of a foreign mobile offshore drilling unit requiring a letter of compliance examination must pay the fee prescribed in 46 CFR 2.10–130.

[CGD 84–098a, 53 FR 18981, May 26, 1988, as amended by CGD 91–030, 60 FR 13563, Mar. 13, 1995]

Subpart D—Vessels

§ 143.300 Applicability.

This subpart applies to all vessels engaged in OCS activities except mobile offshore drilling units.

§ 143.301 Load line requirements.

(a) Vessels, including foreign vessels, which would be subject to the requirements of subchapter E of 46 CFR chapter I concerning load lines when arriving at or proceeding to sea from any port or place within the United States must comply with those requirements when engaged in activities on the OCS.

(b) Load line certificates and load line exemption certificates issued or accepted under subchapter E of 46 CFR chapter I are accepted as evidence of compliance with paragraph (a) of this section.

Subpart E—Standby Vessels

SOURCE: CGD 84–098b, 54 FR 21571, May 18, 1989, unless otherwise noted.

§ 143.400 Applicability.

This subpart applies only to standby vessels meeting the requirements of this subpart and specifically designated in an Emergency Evacuation Plan (EEP) required by §§ 146.140 or 146.210 of this chapter to provide rapid evacuation assistance in the event of an emergency.

§ 143.401 Vessel certification and operation.

Standby vessels must meet the following:

(a) Have a valid certificate of inspection issued in compliance with Subchapters H, I, or T of 46 CFR Chapter I.

(b) Be capable of carrying and providing shelter for 100 per cent of the number of persons on the most populated facility that the standby vessel is designated to assist. Crew spaces may be used to meet the requirements of this section.

(c) Provide bunks or aircraft type reclining seats for 10 per cent of the number of persons on the most populated facility that the standby vessel is designated to assist. Crew spaces may be used to meet the requirements of this section.

(d) Not carry or store goods, supplies, and equipment on the deck of the standby vessel or in other locations that may hinder the vessel's ability to render assistance to the facility that the vessel is designated to assist.

(e) Not carry or store any hazardous material.

§ 143.405 Equipment.

(a) Standby vessels must have, at least, the following equipment:

(1) Multiple propellers or propulsion devices.

(2) Two searchlights.

(3) For vessels certificated under Subchapter H of 46 CFR Chapter I, a line throwing appliance that meets the requirements in 46 CFR 75.45.

(4) For vessels certificated under subchapters I or T of 46 CFR chapter I, a line throwing appliance that meets the requirements of 46 CFR 94.45.

(5) A Stokes or comparable litter.

(6) One blanket for each person on the most populated facility that the standby vessel is designated to assist.

(7) Means for safely retrieving persons, including injured or helpless persons, from the water. The means of retrieval must be demonstrated to the satisfaction of the Officer in Charge, Marine Inspection.

(8) A scramble net that can be rigged on either side of the standby vessel.

(9) A minimum of four Coast Guard approved ring life buoys, each equipped with 15 fathoms of line.

(10) An immersion suit approved by the Coast Guard under 46 CFR 160.171, or a buoyant suit meeting Supplement A of ANSI/UL–1123–1987 and approved under 46 CFR 160.053, for each member of the standby vessel's crew when the standby vessel operates north of 32 degrees north latitude in the Atlantic Ocean or north of 35 degrees north latitude in all other waters.

(11) Two boat hooks.

(12) A fire monitor with a minimum flow rate of, at least, 500 gallons per minute.

(13) One two-way radio capable of voice communications with the OCS facility, helicopters or other rescue aircraft, rescue boats, and shore side support personnel.

(14) Floodlights to illuminate the personnel and boat retrieval area, the scramble net when deployed, and the water around the personnel retrieval and scramble net deployment areas.

(15) A copy of ''The Ship's Medicine Chest and Medical Aid at Sea'', DHHS Publication No. (PHS) 84–2024, available from the Superintendent of Documents, U.S. Government Printing Office, Washington, DC 20402.

(16) An industrial first aid kit sized for 50 percent of the number of persons on the most populated facility that the standby vessel is designated to assist.

(17) Coast Guard approved life preservers for 50 percent of the number of persons on the most populated facility that the standby vessel is designated to assist.

(b) Equipment required by paragraph (a) of this section must be to the satisfaction of the Officer in Charge, Marine Inspection.

§ 143.407 Manning.

Standby vessels must be crewed in accordance with their certificate of inspection for 24 hour operation. The Officer in Charge, Marine Inspection, may require the crew to be augmented, as necessary, to provide for maneuvering the standby vessel, for lookouts, for rigging and operating retrieval equipment, and for caring for survivors.

PART 144—LIFESAVING APPLIANCES

Subpart 144.01—Manned Platforms

Sec.
144.01–1 Life floats.
144.01–5 Location and launching of life floats.
144.01–10 Equipment for life floats.
144.01–15 Alternates for life floats.
144.01–20 Life preservers.
144.01–25 Ring life buoys.
144.01–30 First-aid kit.
144.01–35 Litter.
144.01–40 Emergency communications equipment.

Subpart 144.10—Unmanned Platforms

144.10–1 Lifesaving equipment.
144.10–10 Other lifesaving equipment.

Subpart 144.20—Requirements for U.S. and Undocumented MODU's

144.20–1 Applicability.
144.20–5 Exposure suits.

Subpart 144.30—Requirements for Foreign MODU's

144.30–1 Applicability.
144.30–5 Exposure suits.

AUTHORITY: 43 U.S.C. 1333d; 46 U.S.C. 3102(a); 46 CFR 1.46.

Subpart 144.01—Manned Platforms

§ 144.01–1 Life floats.

Each manned platform shall be provided with at least two approved life floats. The life floats shall have sufficient capacity to accommodate all persons present at any one time.

[CGFR 56–4, 21 FR 903, Feb. 9, 1956]

§ 144.01–5 Location and launching of life floats.

The life floats shall be distributed in accessible locations and mounted on the outboard sides of the working platform in such a manner as to be readily launched.

[CGFR 56–4, 21 FR 903, Feb. 9, 1956]

§ 144.01–10 Equipment for life floats.

(a) Each lifefloat shall be provided with a painter. This painter shall be a manila rope not less than 2¾ inches in circumference and of a length not less than three times the distance from the deck where the lifefloat is stowed to the low water line. Alternatively, the painter may be of other material provided it has equal strength to the size of manila rope specified and is not less than ½ inch in diameter.

(b) Each life float must have a water light of an approved automatic electric type constructed in accordance with 46 CFR Subpart 161.010, except a water light constructed in accordance with former 46 CFR Subpart 161.001 that was installed before January 1, 1972, may be retained in an existing installation as long as it is maintained in good condition. The water light must be attached to the life float by a 12-thread manila or equivalent synthetic lanyard not less than 2 meters (6 feet) nor more than 4 meters (12 feet) in length. The water light must be mounted on a bracket so that when the life float is launched, the water light will pull free of the bracket.

(c) Two paddles shall be provided for each life float. The paddles shall not be less than five feet nor more than six feet long. The paddles shall be stowed in such a way that they will be readily accessible from either side of the life float when in the water.

[CGFR 56–4, 21 FR 903, Feb. 9, 1956]

EDITORIAL NOTE: For FEDERAL REGISTER citations affecting § 144.01–10, see the List of CFR Sections Affected in the Finding Aids section of this volume.

§ 144.01–15 Alternates for life floats.

(a) Approved lifeboats, approved life rafts or approved inflatable life rafts may be used in lieu of approved life floats for either all or part of the capacity required. When either lifeboats or life rafts are used approved means of launching will be required. Inflatable life rafts, when used, shall be distributed and mounted as required for life floats under § 144.01–5.

(b) The equipment required for a lifeboat is a bailer, boat hook, bucket, hatchet, lantern, life line, two life preservers, matches, full complement of oars and steering oar, painter, plug, and rowlocks, of the same type, kind, and character as required for lifeboats

carried on vessels engaged in navigating bays, sounds, and lakes other than the Great Lakes, and rivers.

(c) The equipment required for a life raft is a boat hook, life line (if not a Type A life raft), full complement of oars and steering oar, painter, and rowlocks of the same type, kind, and character as required for life rafts carried on cargo and miscellaneous vessels navigating on bays, sounds, and lakes other than the Great Lakes.

(d) Inflatable liferafts shall be approved by the Coast Guard under approval series 160.151. An approved ''Limited Service'' or ''Ocean Service'' liferaft installed on board a platform before May 9, 1997, may continue to be used to meet the requirements of this section provided it is maintained in good and serviceable condition.

[CGFR 56–4, 21 FR 903, Feb. 9, 1956, as amended by CGFR 60–35 25 FR 10132, Oct. 25, 1960; CGD 85–205, 62 FR 35392, July 1, 1997]

§144.01–20 Life preservers.

(a) An approved life preserver shall be provided for each person on a manned platform. The life preservers shall be located in easily accessible places.

(b) All kapok and fibrous glass life preservers which do not have plastic-covered pad inserts shall be removed from service.

(c) Each life preserver carried on a manned platform must have a personal flotation device light that is approved under Subpart 161.012 of 46 CFR Part 161. Each light must be securely attached to the front shoulder area of the life preserver.

(d) Each life preserver carried on a manned platform must have at least 200 sq. cm (31 sq. in.) of retroreflective material attached on its front side, at least 200 sq. cm on its back side, and at leat 200 sq. cm of material on each of its reversible sides. The material must be Type I material that is approved under 46 CFR 164.018. The material attached on each side of a life preserver must be divided equally between the upper quadrants of the side, and the material in each quadrant must be attached as closely as possible to the shoulder area of the life preserver.

[CGFR 60–35, 25 FR 10132, Oct. 25, 1960, as amended by CGD 78–160, 47 FR 9383, Mar. 3, 1982; USCG–1998–3799, 63 FR 35530, June 30, 1998]

§144.01–25 Ring life buoys.

(a) Each manned platform must have at least four approved ring life buoys constructed in accordance with 46 CFR Subpart 160.050; except ring life buoys approved under former 46 CFR Subpart 160.009 may be used as long as they are in good and serviceable condition. One ring life buoy must be placed on a suitable rack on each side of a manned platform in an accessible place. The ring life buoy must always be capable of being cast loose and may not be permanently secured in any way.

(b) Each ring life buoy must have a water light of an approved automatic electric type constructed in accordance with 46 CFR Subpart 161.010. A water light constructed in accordance with former 46 CFR Subpart 161.001 that was installed before January 1, 1972 may be retained in an existing installation as long as it is maintained in good condition. The water light must be attached to the ring life buoy by a 12-thread manila or equivalent synthetic lanyard not less than 1 meter (3 feet) nor more than 2 meters (6 feet) in length. The water light must be mounted on a bracket near the ring life buoy so that when the ring life buoy is cast loose, the water light will pull free of the bracket.

[CGFR 56–4, 21 FR 903, Feb. 9, 1956, as amended by CGD 79–165b, 45 FR 65208, Oct. 2, 1980; CGD 80–155b. 47 FR 10533, Mar. 11, 1982]

§144.01–30 First-aid kit.

On each manned platform a first-aid kit approved by the Commandant or the U.S. Bureau of Mines shall be provided and kept in the custody of the person in charge.

[CGFR 56–4, 21 FR 903, Feb. 9, 1956, as amended by CGD 73–177R, 40 FR 8176, Feb. 26, 1975]

§144.01–35 Litter.

On each manned platform a Stokes litter, or other suitable safety litter capable of being safely hoisted with an

injured person, shall be provided and kept in an accessible place.

[CGFR 68–154, 33 FR 18626, Dec. 17, 1968]

§ 144.01–40 Emergency communications equipment.

On manned platforms means of communication by radio and/or wire telephone shall be provided for contacting the shore or vessels in the vicinity for aid in the event of an emergency.

[CGFR 56–4, 21 FR 903, Feb. 9, 1956]

Subpart 144.10—Unmanned Platforms

§ 144.10–1 Lifesaving equipment.

(a) Except as allowed in paragraph (b) of this section, no person may be on an unmanned platform unless the following lifesaving equipment is readily accessible on the platform:

(1) A life preserver or a Type I—Personal flotation device, listed in Table 1, for each person.

TABLE 1—LIFE PRESERVERS AND EQUIVALENT PERFORMANCE FLOTATION DEVICES

Devices marked	Equivalent to performance type marked
160.002 Life preserver	Type I—Personal flotation device.
160.003 Life preserver	Type I—Personal flotation device.
160.004 Life preserver	Type I—Personal flotation device.
160.005 Life preserver	Type I—Personal flotation device.
160.055 Life preserver	Type I—Personal flotation device.

(2) An approved ring life buoy (Type IV PFD) for every two persons, but no more than four devices are required. Each ring life buoy must be of a type constructed in accordance with 46 CFR subpart 160.050; except a ring life buoy that was approved under former 46 CFR subpart 160.009 may be used as long as it is in good and serviceable condition.

(3) Each ring life buoy under paragraph (a)(2) of this section must have an approved automatic electric water light that is attached as described in § 144.01–25(b).

(b) The ring life buoys required in paragraph (a)(2) of this section may be kept on a manned vessel that remains alongside the platform if there is no available space to keep them on the platform.

[CGD 73–177R, 40 FR 8176, Feb. 26, 1975, as amended by CGD 80–155b, 47 FR 10533, Mar. 11, 1982]

§ 144.10–10 Other lifesaving equipment.

Any lifesaving equipment on an unmanned platform that is not required in § 144.10–1 must meet the standards contained in Subpart 144.01 of this part.

[CGD 73–177R, 40 FR 8176, Feb. 26, 1975]

Subpart 144.20—Requirements for U.S. and Undocumented MODU's

AUTHORITY: Sec. 4, 67 Stat. 462 (43 U.S.C. 1333) as amended; 49 CFR 1.46(z).

§ 144.20–1 Applicability.

This subpart applies to each MODU operating on the OCS that is not inspected under 46 CFR subchapter I–A.

[CGD 82–075b, 49 FR 4377, Feb. 6, 1984]

§ 144.20–5 Exposure suits.

This section applies to each MODU except those operating south of 32 degrees North latitude in the Atlantic Ocean or south of 35 degrees North latitude in all other waters.

(a) Each MODU must carry an exposure suit for each person on board. The exposure suit must be stowed in a readily accessible location in or near the berthing area of the person for whom the exposure suit is provided.

(b) In addition to the exposure suits required by paragraph (a) of this section, each watch station and work station must have enough exposure suits to equal the number of persons normally on watch in, or assigned to, the station at one time. However, an exposure suit need not be provided at a watch or work station for a person whose cabin, stateroom, or berthing area (and the exposure suits stowed in that location) is readily accessible to the station.

(c) Each exposure suit on a MODU must be of a type approved under 46 CFR 160.071.

(d) Each exposure suit must have a personal flotation device light that is approved under 46 CFR 161.012. Each

light must be securely attached to the front shoulder area of the exposure suit.

(e) Each exposure suit on a MODU must be provided with a whistle of the ball type or multi-tone type, of corrosion resistant construction, and in good working order. The whistle must be attached to the exposure suit by a lanyard without hooks, snaps, clips, etc., that is long enough to permit the whistle to reach the mouth of the wearer. If the lanyard allows the whistle to hang below the waist of the wearer, the whistle must be stowed in a pocket on the exposure suit, or with the lanyard coiled and stopped off.

(f) No stowage container for exposure suits may be capable of being locked.

[CGD 82–075b, 49 FR 4377, Feb. 6, 1984, as amended by CGD 84–090, 50 FR 3904, Jan. 29, 1985]

Subpart 144.30—Requirements for Foreign MODU's

AUTHORITY: Sec. 4, 67 Stat. 462 (43 U.S.C. 1333) as amended; 49 CFR 1.46(z).

§144.30–1 Applicability.

This subpart applies to each MODU engaged in OCS activities that is documented under the laws of a foreign nation.

[CGD 82–075b, 49 FR 4377, Feb. 6, 1984]

144.30–5 Exposure suits.

Each foreign MODU must meet the requirements of §144.20–5 of this chapter, except as follows:

(a) Exposure suits (immersion suits, survival suits, etc.) approved by the nation under which the MODU is documented may be used in lieu of suits approved under 46 CFR 160.071, provided that they are accepted by the Commandant as providing equivalent thermal protection to the wearer. (Requests for acceptance of such suits should be sent to Commandant, U.S. Coast Guard, (G–MSE), Washington, DC 20593–0001, along with technical data supporting the thermal performance of the suits.)

(b) Personal flotation device lights approved by the nation under which the MODU is documented may be used in lieu of lights approved under 46 CFR 161.012.

[CGD 82–075b, 49 FR 4377, Feb. 6, 1984, as amended by CGD 88–052, 53 FR 25121, July 1, 1988; CGD 96–026, 61 FR 33665, June 28, 1996]

PART 145—FIRE-FIGHTING EQUIPMENT

Sec.
145.01 Portable and semi-portable fire extinguishers.
145.05 Classification of fire extinguishers.
145.10 Locations and number of fire extinguishers required.

AUTHORITY: Sec. 633, 63 Stat. 545; sec. 4, 67 Stat. 462; 14 U.S.C. 633; 43 U.S.C. 1333.

§145.01 Portable and semi-portable fire extinguishers.

On all manned platforms and on all unmanned platforms where crews are continuously working on a 24-hour basis, approved type portable fire extinguishers and/or approved type semi-portable fire extinguishers shall be installed and maintained. On all unmanned platforms where crews are not continuously working on a 24-hour basis, approved type portable fire extinguishers and/or approved type semi-portable fire extinguishers are required to be installed and maintained only when crews are working thereon.

[CGFR 56–4, 21 FR 903, Feb. 9, 1956]

§145.05 Classification of fire extinguishers.

(a) Portable and semi-portable extinguishers shall be classified by a combination letter and number symbol. The letter indicating the type of fire which the unit could be expected to extinguish, and the number indicating the relative size of the unit.

(b) The types of fire will be designated as follows:

(1) ''A'' for fires in ordinary combustible materials where the quenching and cooling effects of quantities of water, or solutions containing large percentages of water, are of first importance.

(2) ''B'' for fires in flammable liquids, greases, etc., where a blanketing effect is essential.

(3) ''C'' for fires in electrical equipment where the use of a non-conducting extinguishing agent is of first importance.

(c) The number designations for size will start with ''I'' for the smallest to ''V'' for the largest. Sizes I and II are considered portable extinguishers. Sizes III, IV and V are considered semi-portable extinguishers which shall be fitted with suitable hose and nozzle or other practicable means so that all portions of the space concerned may be covered. Examples of size graduations for some of the typical portable and semi-portable extinguishers are set forth in Table 145.05(c).

TABLE 145.05(C)—PORTABLE AND SEMIPORTABLE EXTINGUISHERS

Classification		Soda-acid and water, gallons	Foam, gallons	Carbon dioxide, pounds	Dry chemical, pounds
Type	Size				
A	II	2½	2½	.....	.....
B	II	.....	2½	15	10
C	II	.....	.....	15	10
B	V	.....	40	100	50

(d) All portable and semi-portable extinguishers shall have permanently attached thereto a durable name plate giving the name of the item, the rated capacity in gallons or pounds, the name and address of the person or firm for whom approved, and the identifying mark of the actual manufacturer.

[CGFR 56–4, 21 FR 903, Feb. 9, 1956, as amended by CGFR 58–28, 23 FR 6880, Sept. 6, 1958]

§ 145.10 Locations and number of fire extinguishers required.

(a) Approved portable and semi-portable extinguishers shall be installed in accordance with Table 145.10(a).

(b) Semi-portable extinguishers shall be located in the open so as to be readily seen.

TABLE 145.10(A)—PORTABLE AND SEMI-PORTABLE EXTINGUISHERS

Space	Classification	Quantity and location
SAFETY AREAS		
Communicating corridors	A–II	1 in each main corridor not more than 150 feet apart. (May be located in stairways.)
Radio room	C–II	1 in vicinity of exit.
ACCOMMODATIONS		
Sleeping accommodations	A–II	1 in each sleeping accommodation space. (Where occupied by more than 4 persons.)
SERVICES SPACES		
Galleys	B–II or C–II	1 for each 2,500 square feet or fraction thereof for hazards involved.
Storerooms	A–II	1 for each 2,500 square feet or fraction thereof located in vicinity of exits, either inside or outside of spaces.
MACHINERY SPACES		
Gas-fired boilers	B–II (CO_2 or dry chemical).	2 required.
Gas-fired boilers	B–V	1 required.[1]
Oil-fired boilers	B–II	2 required.
Oil-fired boilers	B–V	2 required.[1]
Internal combustion or gas turbine engines	B–II	1 for each engine.[2]
Electric motors or generators of open type	C–II	1 for each 2 motors or generators.[3]

[1] Not required where a fixed carbon dioxide system is installed.
[2] When installation is on weather deck or open to atmosphere at all times 1 B–II for each three engines is allowable.
[3] Small electrical appliances, such as fans, etc., shall not be counted or used as basis for determining number of extinguishers required.

[CGFR 56–4, 21 FR 903, Feb. 9, 1956]

PART 146—OPERATIONS

Subpart A—OCS Facilities

Sec.
146.1 Applicability.
146.5 Person in charge.
146.10 Notice of new facilities.
146.15 Maintenance of emergency equipment.
146.20 Work vests.
146.30 Notice of casualties.
146.35 Written report of casualty.
146.40 Diving casualties.
146.45 Pollution incidents.

Subpart B—Manned OCS Facilities

146.101 Applicability.
146.105 General alarm system.
146.110 Emergency signals.
146.115 Duties of personnel during an emergency.
146.120 Manning of survival craft.
146.125 Emergency drills.
146.130 Station bill.
146.135 Markings for emergency equipment.
146.140 Emergency Evacuation Plan.

Subpart C—Mobile Offshore Drilling Units

146.201 Applicability.
146.202 Notice of arrival or relocation of MODUs on the OCS.
146.203 Requirements for U.S. and undocumented MODUs.
146.205 Requirements for foreign MODUs.
146.210 Emergency Evacuation Plan.

Subpart D—Vessels

146.301 Applicability.
146.303 Notice and written report of casualties.

AUTHORITY: 43 U.S.C. 1333(d)(1), 1348(c), 1356; 49 CFR 1.46.

SOURCE: CGD 78–160, 47 FR 9383, Mar. 4, 1982, unless otherwise noted.

Subpart A—OCS Facilities

§146.1 Applicability.

The provisions of this subpart apply to OCS facilities except mobile offshore drilling units.

§146.5 Person in charge.

(a) The owner or operator, or the agent of either of them, shall designate by title and in order of succession the persons on each OCS facility who shall be the ''person in charge.''

(b) In case an emergency arises, nothing in the regulations in this subchapter shall be so construed as preventing the person in charge from pursuing the most effective action in that person's judgement for rectifying the conditions causing the emergency.

§146.10 Notice of new facilities.

(a) The owner or operator of each OCS facility not in operation before April 5, 1982 shall, at least 30 days before the date on-site construction of the facility is expected to commence, notify the District Commander for the area in which the facility will be located of:

(1) The position in which the facility will be operated;

(2) The designation assigned to the facility for identification under 30 CFR 250.37;

(3) The date when operation of the facility is expected to commence; and

(4) The date when the facility is expected to be available for inspection by the Coast Guard.

(b) The information required in paragraph (a) of this section may be submitted together with an need not repeat information submitted in connection with the application and notice requirements in 33 CFR Part 67 for aids to navigation on the Outer Continental Shelf.

§146.15 Maintenance of emergency equipment.

(a) The emergency equipment provided, regardless of whether or not required by this subchapter, shall be maintained in good condition at all times. Good operating practices require replacement of expended equipment, as well as periodic renewal of those items which have a limited period of effectiveness.

(b) Each personal flotation device light that has a non-replaceable power source must be replaced on or before the expiration date of the power source.

(c) Each replaceable power source for a personal flotation device light must be replaced on or before its expiration date and the light must be replaced when it is no longer serviceable.

§146.20 Work vests.

(a) *Types of approved work vests.* Each buoyant work vest carried under the

permissive authority of this section must be approved under—

(1) 46 CFR 160.053; or

(2) 46 CFR 160.077 as a commercial hybrid PFD.

(b) *Use.* Approved buoyant work vests are considered to be items of safety apparel and may be carried aboard OCS facilities to be worn by persons employed thereon when working near or over the water. The use and control of such vests shall be under the supervision of the person in charge of the facility. When carried, such vests shall not be accepted in lieu of any portion of the required number of approved life preservers and shall not be substituted for the approved life preservers required to be worn during drills and emergencies.

(c) *Stowage.* The work vests shall be stowed separately from the regular stowage of approved life preservers. The location for the stowage of work vests shall be such as not to be easily confused with that for approved life preservers.

(d) *Inspections.* Each work vest shall be subject to examination by a marine inspector to determine its serviceability. If found to be satisfactory, it may be continued in service, but shall not be stamped by a marine inspector with a Coast Guard stamp. If a work vest is found not to be in a serviceable condition, then such work vest shall be removed from the OCS facility. If a work vest is beyond repair, it shall be destroyed or mutilated in the presence of a marine inspector so as to prevent its continued use as a work vest.

(e) *Additional requirements for hybrid work vests.* Commercial hybrid PFD's must, in addition to the other requirements in this section, be—

(1) Used, stowed, and maintained in accordance with—

(i) The procedures set out in the manual required for these devices by 46 CFR 160.077–29; and

(ii) Any limitation(s) marked on them; and

(2) Of the same or similar design and have the same method of operation as each other hybrid PFD carried on board.

[CGD 78–160, 47 FR 9383, Mar. 4, 1982, as amended by CGD 78–174A, 51 FR 4339, Feb. 4, 1986]

§ 146.30 Notice of casualties.

(a) The owner, operator, and person in charge of an OCS facility shall ensure that the Coast Guard is notified as soon as possible after a casualty occurs, and by the most rapid means available, of each casualty involving the facility which results in:

(1) Death; or

(2) Injury to 5 or more persons in a single incident.

(b) The owner, operator, and person in charge shall ensure that the Coast Guard is notified promptly of each casualty involving the facility which results in:

(1) Damage affecting the usefulness of primary lifesaving or firefighting equipment;

(2) Injury causing any person to be incapacitated for more than 72 hours;

(3) Damage to the facility exceeding $25,000 resulting from a collision by a vessel with the facility; or

(4) Damage to a floating OCS facility exceeding $25,000.

(c) The notice required by paragraphs (a) and (b) of this section must identify the person giving the notice and the facility involved and describe, insofar as practicable, the nature of the casualty and the extent of injury to personnel and damage to property.

(d) Damage costs referred to in paragraphs (b)(3) and (b)(4) of this section include the cost of labor and material to restore the facility to the service condition which existed prior to the casualty, but does not include the cost of salvage, cleaning, gas freeing, drydocking or demurrage of the facility.

(Approved by the Office of Management and Budget under OMB control numbers 2115–0003 and 2115–0004)

[CGD 78–160, 47 FR 9383, Mar. 4, 1982, as amended by CGD 82–069, 50 FR 14216, Apr. 11, 1985]

§ 146.35 Written report of casualty.

(a) In addition to the notice of a casualty required by § 146.30, the owner, operator, or person in charge shall, within 10 days of the casualty, submit to the Officer in Charge, Marine Inspection, a written report which:

(1) Identifies the facility involved, its owner, operator, and person in charge;

(2) Describes the casualty, including the date and time;

(3) Describes the nature and extent of injury to personnel and damage to property;

(4) Describes the factors which may have contributed to causing the casualty;

(5) Gives the name, address, and phone number of persons involved in or witnessing the casualty; and

(6) Gives any desired comments, especially with respect to use of or need for emergency equipment.

(7) Includes information relating to alcohol or drug involvement as specified in the vessel casualty reporting requirements of 46 CFR 4.05–12.

(b) The written report required by paragraph (a) of this section may be—

(1) In narrative form if all appropriate parts of Form CG–2692 are addressed;

(2) On Form CG–2692 for casualties resulting in property damage, personnel injury, or loss of life.

(c) If filed or postmarked within 5 days of the casualty, the written report required by paragraph (a) of this section serves as the notice required by § 146.30(b).

(Approved by the Office of Management and Budget under OMB control numbers 2115–0003 and 2115–0004)

[CGD 78–160, 47 FR 9383, Mar. 4, 1982, as amended by CGD 82–023a, 47 FR 35741, Aug. 16, 1982; CGD 82–023a, 48 FR 43174, Sept. 22, 1983; CGD 84–099, 52 FR 47533, Dec. 14, 1987]

§ 146.40 Diving casualties.

Diving related casualties are reported in accordance with 46 CFR 197.484 and 197.486.

§ 146.45 Pollution incidents.

Oil pollution incidents involving an OCS facility are reported in accordance with §§ 135.305 and 135.307 of this chapter. Additional provisions concerning liability and compensation because of oil pollution are contained in Subchapter M of this chapter.

Subpart B—Manned OCS Facilities

§ 146.101 Applicability.

The provisions of this subpart apply only to manned OCS facilities except mobile offshore drilling units.

§ 146.105 General alarm system.

Each manned facility must have a general alarm system. When operated, this system shall be audible in all parts of the structure on which provided.

§ 146.110 Emergency signals.

(a) The owner, the owner's agent, or the person in charge shall establish emergency signals to be used for calling the personnel to their emergency stations.

(b) The signal to man emergency stations shall be an intermittent signal on the general alarm system for not less than 10 seconds. The abandon facility signal shall be a continuous signal on the general alarm system.

§ 146.115 Duties of personnel during an emergency.

(a) The owner, the owner's agent, or the person in charge shall assign to each person on a manned facility special duties and duty stations so that in event an emergency arises confusion will be minimized and no delay will occur with respect to the use or application of equipment required by this subchapter. The duties shall, as far as possible, be comparable with the regular work of the individual.

(b) The duties shall be assigned as necessary for the proper handling of any emergency, and shall include the following:

(1) The closing of air ports, watertight doors, scuppers, and sanitary and other discharges which lead through the facility's hull.

(2) The stopping of fans and ventilation systems.

(3) The donning of life preserves.

(4) The preparation and launching of life floats, lifeboats, or life rafts.

§ 146.120 Manning of survival craft.

The owner, the owner's agent, or the person in charge shall assign a person to each life float, lifeboat, life raft, or survival capsule who shall be responsible for launching it in event of an emergency.

§ 146.125 Emergency drills.

(a) Emergency drills shall be conducted at least once each month by the

person in charge of the manned facility. The drill shall be conducted as if an actual emergency existed. All personnel should report to their respective stations and be prepared to perform the duties assigned to them.

(b) The person in charge and conducting the emergency drill shall instruct the personnel as necessary to insure that all persons are familiar with their duties and stations.

(c) *Emergency evacuation drills.* The following emergency evacuation drills must be conducted:

(1) At least once a year, all the elements of the Emergency Evacuation Plan (EEP) under § 146.140 relating to the evacuation of personnel from the facility must be exercised through a drill or a series of drills. The drill(s) must exercise all of the means and procedures listed in the EEP for each circumstance and condition described in the EEP under § 146.140(d)(9).

(2) At least once a month, a drill must be conducted that demonstrates the ability of the facility's personnel to perform their duties and functions on the facility, as those duties and functions are described in the EEP. If a standby vessel is designated for that facility in the EEP, the vessel must be positioned as described in the EEP for an evacuation of that facility and the vessel's crew must demonstrate its ability to perform its duties and functions under the EEP.

(d) The date and time of such drills shall be reported in writing by the person in charge at the time of the drill to the owner who shall maintain this report record for a year and furnish it upon request to the Coast Guard. After one year, such records may be destroyed. When it is impossible to conduct emergency drills as required by this section during a particular calendar month, during the following month, a written report by the owner shall be submitted to the Officer in Charge, Marine Inspection, stating why the drills could not be conducted.

(Approved by the Office of Management and Budget under OMB control number 2115–0071)

[CGD 78–160, 47 FR 9383, Mar. 4, 1982, as amended by CGD 84–098b, 54 FR 21572, May 18, 1989]

§ 146.130 Station bill.

(a) The person in charge of each manned platform shall be responsible for and have prepared a station bill (muster list). This station bill must be signed by the person in charge. Copies shall be duly posted in conspicuous locations on the manned platform.

(b) The station bill shall set forth the special duties and duty stations of each member of the personnel for any emergency which involves the use or application of equipment required by this subchapter. In addition, it shall contain all other duties assigned and considered as necessary for the proper handling of other emergencies.

(c) The station bill shall contain the various signals to be used for calling the personnel to their emergency stations, and to abandon the facility.

(Approved by the Office of Management and Budget under OMB control number 2115–0542)

[CGD 78–160, 47 FR 9383, Mar. 4, 1982, as amended by CGD 86–011, 51 FR 5712, Feb. 18, 1986]

§ 146.135 Markings for emergency equipment.

(a) Markings shall be provided as considered necessary for the guidance of persons on manned facilities.

(b) The general alarm bell switches shall be identified by red letters at least one inch high with a contrasting background: ''General Alarm.''

(c) All general alarm bells shall be identified by a sign at each bell in red letters at least one inch high with a sharp contrasting background: ''General Alarm—When Bell Rings Go to Your Station.

(d) All life floats, lifeboats, life rafts, and survival capsules, together with paddles or oars, shall be conspicuously marked with a name or number of, or other inscription identifying, the facility on which placed. The number of persons allowed on each life float, lifeboat, or life raft shall be conspicuously marked thereon in letters and numbers 1½ inches high. These numbers shall be placed on both sides of the life float, lifeboat, or life raft. Inflatable life rafts shall be marked in accordance with Subpart 160.051 of 46 CFR Part 160 and no additional markings are required.

(e) All life preservers and ring life buoys shall be marked with the name or number of, or other inscription identifying, the facility on which placed except those which accompany mobile crews to unmanned platforms may be marked with the operator's name and field designation.

§ 146.140 Emergency Evacuation Plan.

(a) The operator of each manned OCS facility shall develop an Emergency Evacuation Plan (EEP) for the facility which addresses all of the items listed in paragraph (d) of this section. The EEP may apply to more than one facility, if the facilities are located in the same general geographic location and within the same Coast Guard Officer in Charge, Marine Inspection (OCMI) zone; if each facility covered by the EEP is specifically identified in the EEP; and if the evacuation needs of each facility are accommodated. The EEP must be submitted to the OCMI having jurisdiction over the facility, 30 days before placing the facility in operation. The OCMI reviews the EEP to determine whether all items listed in paragraph (d) of this section are addressed for each facility included in the EEP. If the OCMI determines that all items in paragraph (d) of this section are addressed, the OCMI stamps the EEP ''APPROVED'' and returns it, together with a letter indicating Coast Guard approval, to the operator. If the OCMI determines that any item is not addressed, the OCMI stamps the EEP ''RETURNED FOR REVISION'' and returns the EEP, together with an explanation of the EEP's deficiencies, to the operator.

(b) Once the EEP is approved under paragraph (a) of this section, the facility operator shall ensure that a copy of the EEP and the letter indicating Coast Guard approval is maintained on the facility.

(c) The EEP must be resubmitted for approval when substantive changes are made to the EEP. Only the pages affected by a change need be resubmitted if the EEP is bound in such a way as to allow old pages to be removed easily and new ones inserted. Substantive changes include, but are not limited to, installation of a new facility within the area covered by an EEP, relocation of a MODU, changes in the means or methods of evacuation, or changes in the time required to accomplish evacuation.

(d) The EEP must, at a minimum,

(1) Be written in language that is easily understood by the facility's operating personnel;

(2) Have a table of contents and general index;

(3) Have a record of changes;

(4) List the name, telephone number, and function of each person to be contacted under the EEP and state the circumstances in which that person should be contacted;

(5) List the facility's communications equipment, its available frequencies, and the communications schedules with shore installations, standby vessels, rescue aircraft, and other OCS facilities specified in the EEP;

(6) Identify the primary source of weather forecasting relied upon in implementing the EEP and state the frequency of reports when normal weather is forecasted, the frequency of reports when heavy weather is forecasted, and the method of transmitting the reports to the facility;

(7) Designate the individual on each facility covered by the EEP who is assigned primary responsibility for implementing the EEP;

(8) Designate those facility and shoreside support personnel who have the authority to advise the person in charge of the facility as to the best course of action to be taken and who initiate actions to assist facility personnel;

(9) Describe the recognized circumstances, such as fires or blowouts, and environmental conditions, such as approaching hurricanes or ice floes, in which the facility or its personnel would be placed in jeopardy and a mass evacuation of the facility's personnel would be recommended;

(10) For each of the circumstances and conditions described under paragraph (d)(9) of this section, list the pre-evacuation steps for securing operations, whether drilling or production, including the time estimates for completion and the personnel required;

(11) For each of the circumstances and conditions described under paragraph (d)(9) of this section, describe the order in which personnel would be evacuated, the transportation resources to be used in the evacuation, the operational limitations for each mode of transportation specified, and the time and distance factors for initiating the evacuation; and

(12) For each of the circumstances and conditions described under paragraph (d)(9) of this section, identify the means and procedures—

(i) For retrieving persons from the water during an evacuation;

(ii) For transferring persons from the facility to designated standby vessels, lifeboats, or other types of evacuation craft;

(iii) For retrieving persons from designated standby vessels, lifeboats, or other types of evacuation craft if used; and

(iv) For the ultimate evacuation of all persons on the facility to land, another facility, or other location where the evacuees would be reasonably out of danger under the circumstance or condition being addressed.

(e) The operator shall ensure that—

(1) All equipment specified in the EEP, whether the equipment is located on or off of the facility, is made available and located as indicated in the EEP and is designed and maintained so as to be capable of performing its intended function during an emergency evacuation;

(2) All personnel specified in the EEP are available and located as specified in the EEP and are trained in fulfilling their role under the EEP; and

(3) Drills are conducted in accordance with § 146.125(c).

(f) A complete copy of the EEP must be made available to the facility's operating personnel and a brief written summary of, or an oral briefing on, the EEP must be given to each person newly reporting on the facility.

(g) A copy of the EEP must be on board each standby vessel, if any, designated in the EEP and provided to all shoreside support personnel, if any, specified in the EEP.

[CGD 84–098b, 54 FR 21572, May 18, 1989, as amended by USCG–1998–3799, 63 FR 35530, June 30, 1998]

Subpart C—Mobile Offshore Drilling Units

§ 146.201 Applicability.

This subpart applies to mobile offshore drilling units engaged in OCS activities.

§ 146.202 Notice of arrival or relocation of MODUs on the OCS.

(a) The owner of any mobile offshore drilling unit engaged in OCS activities shall, 14 days before arrival of the unit on the OCS or as soon thereafter as practicable, notify the District Commander for the area in which the unit will operate of:

(1) The unit's name, nationality, and designation assigned for identification under 30 CFR 250.37;

(2) The location and year that the unit was built;

(3) The name and address of the owner, and the owner's local representative, if any;

(4) Classification or inspection certificates currently held by the unit;

(5) The location and date that operations are expected to commence and their anticipated duration; and

(6) The location and date that the unit will be available and ready for inspection by the Coast Guard.

(b) Once a unit is located on the OCS, the owner of the unit shall notify the District Commander before relocating the unit.

(c) The information required in paragraphs (a) and (b) of this section may be provided by telephone or may be submitted together with, and need not repeat information contained in, applications and notices under 33 CFR part 67 for aids to navigation on the Outer Continental Shelf or 33 CFR part 135 for applications for certificate of financial responsibility.

§ 146.203 Requirements for U.S. and undocumented MODUs.

Each mobile offshore drilling unit documented under the laws of the United States and each mobile offshore drilling unit that is not documented under the laws of any nation must comply with the operating standards of 46 CFR part 109 when engaged in OCS activities.

§ 146.205 Requirements for foreign MODUs.

Each mobile offshore drilling unit that is documented under the laws of a foreign nation must, when engaged in OCS activities, comply with one of the following:

(a) The operating standards of 46 CFR part 109.

(b) The operating standards of the documenting nation if the standards provide a level of safety generally equivalent to or greater than that provided under 46 CFR part 109.

(c) The operating standards for mobile offshore drilling units contained in the International Maritime Organization (IMO, formerly Inter-Governmental Maritime Consultative Organization or IMCO) (IMO) Code for the Construction and Equipment of Mobile Offshore Drilling Units (IMO Assembly Resolution A. 414(XI)) which has been incorporated by reference and the requirements of 46 CFR Part 109 for matters not addressed by the Code.

§ 146.210 Emergency Evacuation Plan.

(a) Except as otherwise provided in this section, the requirements applicable to Emergency Evacuation Plans (EEPs) on manned OCS facilities under § 146.140 are applicable to MODUs.

(b) An EEP must be submitted by—

(1) The holder of a lease or permit under the Act for each MODU within the area of the lease or the area covered by the permit; or

(2) The operator under 30 CFR 250.2(gg), if other than the holder of a lease or permit, for each MODU within the area in which the operator controls or manages operations.

(c) To avoid unnecessary duplication, the EEP may incorporate by reference pertinent sections of the MODU's operating manual required by 46 CFR 109.121.

(d) In complying with § 146.140(d)(7), the EEP must designate the master or person in charge of the MODU under 46 CFR 109.107 as the individual who is assigned primary responsibility for implementing the EEP, as it relates to that MODU.

[CGD 84–098b, 54 FR 21573, May 18, 1989]

Subpart D—Vessels

§ 146.301 Applicability.

This subpart applies to vessels engaged in OCS activities other than United States vessels already required to report marine casualties under Subpart 4.05 of 46 CFR part 4 or subpart D of 46 CFR part 109.

§ 146.303 Notice and written report of casualties.

The owner, operator, or person in charge of a vessel engaged in OCS activities shall ensure that the notice of casualty requirements of §146.30 and the written report requirements of §146.35 are complied with whenever a casualty involving the vessel occurs which results in:

(a) Death;

(b) Injury to 5 or more persons in a single incident; or

(c) Injury causing any person to be incapacitated for more than 72 hours.

(Approved by the Office of Management and Budget under OMB control numbers 2115–0003 and 2115–0004)

PART 147—SAFETY ZONES

Sec.
147.1 Purpose of safety zones.
147.5 Delegation of authority.
147.10 Establishment of safety zones.
147.15 Extent of safety zones.
147.1101 Definitions.
147.1102 Platform GRACE safety zone.
147.1103 Platform GINA safety zone.
147.1104 Platform ELLEN & ELLY safety zone.
147.1105 Platform HONDO safety zone.
147.1106 Exxon Santa Ynez offshore storage and treatment vessel mooring safety zone.
147.1107 Platform GILDA safety zone.
147.1108 Platform EDITH safety zone.
147.1109 Platform HERMOSA safety zone.
147.1110 Platform HARVEST safety zone.
147.1111 Platform EUREKA safety zone.
147.1112 Platform HIDALGO safety zone.
147.1113 Platform GAIL safety zone.
147.1114 Platform HARMONY safety zone.
147.1115 Platform HERITAGE safety zone.
147.1116 Platform IRENE safety zone.

AUTHORITY: 14 U.S.C. 85; 43 U.S.C. 1333; 49 CFR 1.46.

SOURCE: CGD 78–160, 47 FR 9386, Mar. 4, 1982, unless otherwise noted.

§ 147.1 Purpose of safety zones.

Safety zones may be established around OCS facilities being constructed, maintained, or operated on the Outer Continental Shelf to promote the safety of life and property on the facilities, their appurtenances and attending vessels, and on the adjacent waters within the safety zones. Regulations adopted for safety zones may extend to the prevention or control of specific activities and access by vessels or persons, and include measures to protect the living resources of the sea from harmful agents. The regulations do not encompass the operating equipment or procedures used in the drilling for and production of oil, gas, or other minerals, or the transportation of oil, gas, or other minerals by pipeline except as they relate to the safety of life and property on OCS facilities and on the waters adjacent to OCS facilities or to the protection of the living resources of the sea within a safety zone from harmful agents.

§ 147.5 Delegation of authority.

The authority to establish safety zones and to issue and enforce safety zone regulations in accordance with the provisions of this part is delegated to District Commanders.

§ 147.10 Establishment of safety zones.

(a) Whenever it comes to the attention of the District Commander that a safety zone and regulations may be required concerning any OCS facility being constructed, maintained, or operated on the Outer Continental Shelf or its appurtenances and attending vessels, or the adjacent waters, the District Commander may initiate appropriate inquiry to determine whether a safety zone and regulations should be established. In making this determination, the District Commander considers all relevant safety factors, including existing or reasonably foreseeable congestion of vessels, the presence of unusually harmful or hazardous substances, and any obstructions within 500 meters of the OCS facility. If the District Commander determines that the circumstances warrant the establishment of a safety zone and regulations the District Commander takes action as necessary consistent with the provisions of this part.

(b) Except as provided in paragraph (c) of this section, a safety zone and necessary regulations may be established concerning any OCS facility being constructed, maintained or operated on the Outer Continental Shelf, following publication of a notice of proposed rule making in the FEDERAL REGISTER and after interested parties have been given the opportunity to submit comments. A zone and necessary regulations may be in effect during any period when construction equipment and materials are within 500 meters of the construction site until the removal of all portions of the facility.

(c) A safety zone and necessary regulations may be established without public rule making procedures when the District Commander determined that imminent danger exists with respect to the safety of life and property on an OCS facility constructed, maintained, or operated on the Outer Continental Shelf, its appurtenances and attending vessels or adjacent waters. A safety zone and regulations may be made effective on the date the rule is published in the FEDERAL REGISTER. However, if circumstances require, they may be placed into effect immediately, followed promptly by publication in the FEDERAL REGISTER. The District Commander may utilize, in addition to broadcast Notices to Mariners, Local Notices to Mariners, and Notices to Mariners, newspapers, and broadcasting stations to disseminate information concerning a safety zone and regulations pertaining thereto. The public may comment concerning the establishment of a safety zone or regulations under this paragraph. A safety zone or regulations may be modified or withdrawn, as appropriate, based on the comments received.

(d) Geographic coordinates expressed in terms of latitude or longitude, or both, are not intended for plotting on maps or charts whose referenced horizontal datum is the North American Datum of 1983 (NAD 83), unless such geographic coordinates are expressly labeled NAD 83. Geographic coordinates without the NAD 83 reference may be plotted on maps or charts reference to

NAD 83 only after application of the appropriate corrections that are published on the particular map or chart being used.

[CGD 78–160, 47 FR 9386, Mar. 4, 1982, as amended by CGD 86–082, 52 FR 33811, Sept. 8, 1987]

§147.15 Extent of safety zones.

A safety zone establishment under this part may extend to a maximum distance of 500 meters around the OCS facility measured from each point on its outer edge or from its construction site, but may not interfere with the use of recognized sea lanes essential to navigation.

§147.1101 Definitions.

Attending vessel. As used in safety zones established in the Eleventh Coast Guard District, unless otherwise stated, the term ''attending vessel'' refers to any vessel operated by the owner or operator of a facility located on the Outer Continental Shelf, which is used for the purpose of carrying supplies, equipment or personnel to or from the facility, engaged in construction, maintenance, alteration or repair of the facility, or which is used for further exploration, production, transfer or storage of natural resources from the seabed beneath the safety zone.

[CCGD 11–79–02, 47 FR 39679, Sept. 9, 1982; 48 FR 33263, July 21, 1983]

§147.1102 Platform GRACE safety zone.

(a) *Description:* The area within a line 500 meters from each point on the structure's outer edge. The position of the center of the structure is 34°–10′–47″N, 119°–28′–05″W.

(b) *Regulations:* No vessel may enter or remain in this safety zone except the following: (1) An attending vessel, (2) a vessel under 100 feet in length overall not engaged in towing, or (3) a vessel authorized by the Commander, Eleventh Coast Guard District.

[CCGD 11–79–02, 47 FR 39679, Sept. 9, 1982; 48 FR 33263, July 21, 1983]

§147.1103 Platform GINA safety zone.

(a) *Description:* The area within a line 500 meters from each point on the structure's outer edge. The position of the center of the structure is 34°–07′–02″N, 119°–16′–35″W.

(b) *Regulations:* No vessel may enter or remain in this safety zone except the following: (1) An attending vessel, (2) a vessel under 100 feet in length overall not engaged in towing, or (3) a vessel authorized by the Commander, Eleventh Coast Guard District.

[CCGD 11–79–02, 47 FR 39679, Sept. 9, 1982; 48 FR 33263, July 21, 1983]

§147.1104 Platform ELLEN & ELLY safety zone.

(a) *Description:* The areas within a line 500 meters from each point on the outer edge of each structure. The structures are approximately 120 meters apart. The position of the center of each structure is: Platform Ellen, 33°–34′–57″N, 118°–07′–42″W; and Platform Elly, 33°–35′–00″N, 118°–07′–40″W.

(b) *Regulations:* No vessel may enter or remain in this safety zone except the following: (1) An attending vessel serving either structure, (2) a vessel under 100 feet in length overall not engaged in towing, or (3) a vessel authorized by the Commander, Eleventh Coast Guard District.

[CCGD 11–79–02, 47 FR 39679, Sept. 9, 1982; 48 FR 33263, July 21, 1983]

§147.1105 Platform HONDO safety zone.

(a) *Description:* The area within a line 500 meters from each point on the structure's outer edge. The position of the center of the structure is 34°–23′–27″N, 120°–07′–14″W.

(b) *Regulations:* No vessel may enter or remain in this safety zone except for the following: (1) An attending vessel, (2) a vessel under 100 feet in length overall not engaged in towing, or (3) a vessel authorized by the Commander, Eleventh Coast Guard District.

[CCGD 11–79–02, 47 FR 39679, Sept. 9, 1982; 48 FR 33263, July 21, 1983]

§147.1106 Exxon Santa Ynez offshore storage and treatment vessel mooring safety zone.

(a) *Description:* The area within a line 1108 meters for the center of the mooring. The position of the center of the mooring is 34°–24′–19″N 120°–06′00″–W.

(b) *Regulations:* No vessel may enter or remain in this safety zone except the following: (1) An attending vessel, (2) a vessel under 100 feet in length overall not engaged in towing, or (3) a vessel authorized by the Commander, Eleventh Coast Guard District.

[CCGD 11–79–02, 47 FR 39679, Sept. 9, 1982; 48 FR 33263, July 21, 1983]

§ 147.1107 Platform GILDA safety zone.

(a) *Description:* The area within a line 500 meters from each point on the structure's outer edge. The position of the center of the structure is 34°–10′–56″N. 119°–25′–07″W.

(b) *Regulations:* No vessel may enter or remain in this safety zone except for the following: (1) An attending vessel, (2) a vessel under 100 feet in length overall not engaged in towing, or (3) a vessel authorized by the Commander, Eleventh Coast Guard District.

[CCGD 11–79–02, 47 FR 39679, Sept. 9, 1982; 48 FR 33263, July 21, 1983]

§ 147.1108 Platform EDITH safety zone.

(a) *Description:* The area within a line 500 meters from each point on the structure's outer edge. The position of the center of the structure is 33°–35′–45″N. 118°–08′–27″W.

(b) *Regulations:* No vessel may enter or remain in this safety zone except for the following: (1) An attending vessel, (2) a vessel under 100 feet in length overall not engaged in towing, or (3) a vessel authorized by the Commander, Eleventh Coast Guard District.

[CCGD 11–79–02, 47 FR 39679, Sept. 9, 1982; 48 FR 33263, July 21, 1983]

§ 147.1109 Platform HERMOSA safety zone.

(a) *Description:* The area within a line 500 meters from each point on the structure's outer edge. The position of the center of the structure is 34–27–19 N, 120–38–47 W.

(b) *Regulations:* No vessel may enter or remain in this safety zone except the following: (1) An attending vessel, (2) a vessel under 100 feet in length overall not engaged in towing or (3) a vessel authorized by the Commander, Eleventh Coast Guard District.

[CGD 11–84–01, 49 FR 33015, Aug. 20, 1984]

§ 147.1110 Platform HARVEST safety zone.

(a) *Description:* The area within a line 500 meters from each point on the structure's outer edge. The position of the center of the structure is 34–28–09.5N, 120–40–46.1W.

(b) *Regulations:* No vessel may enter or remain in this safety zone except for the following: (1) An attending vessel, (2) a vessel under 100 feet in length overall not engaged in towing or (3) a vessel authorized by the Commander, Eleventh Coast Guard District.

[CGD 11–84–01, 49 FR 33016, Aug. 20, 1984]

§ 147.1111 Platform EUREKA safety zone.

(a) *Description:* The area within a line 500 meters from each point on the structure's outer edge. The position of the center of the structure is 33–33–50N, 118–07–00W.

(b) *Regulations:* No vessel may enter or remain in this safety zone except the following: (1) An attending vessel, (2) a vessel under 100 feet in length overall not engaged in towing or (3) a vessel authorized by the Commander, Eleventh Coast Guard District.

[CGD 11–84–01, 49 FR 33016, Aug. 20, 1984]

§ 147.1112 Platform HIDALGO safety zone.

(a) *Description:* The area within a line 500 meters from each point on the structure's outer edge. The position of the center of the structure is 34–29–42N, 120–42–08W.

(b) *Regulations:* No vessel may enter or remain in this safety zone except the following: (1) An attending vessel, (2) a vessel under 100 feet in length overall not engaged in towing or (3) a vessel authorized by the Commander, Eleventh Coast Guard District.

[CGD 11–84–01, 49 FR 33016, Aug. 20, 1984]

§ 147.1113 Platform GAIL safety zone.

(a) *Description:* The area within a line 500 meters from each point on the structure's outer edge. The position of the center of the structure is 34°-07′-30″ N, 119°-24′-01″ W.

(b) *Regulation:* No vessel may enter or remain in this safety zone except the following: (1) An attending vessel, (2) a

vessel under 100 feet in length overall not engaged in towing, or (3) a vessel authorized by the Commander, Eleventh Coast Guard District.

[CGD11–87–06, 52 FR 9657, Mar. 26, 1987]

§ 147.1114 Platform HARMONY safety zone.

(a) *Description:* The area within a line 500 meters from each point on the structure's outer edge. The position of the center of the structure is 34°–22′–36″ N, 120°–10′–03″ W.

(b) *Regulation:* No vessel may enter or remain in this safety zone except the following: (1) an attending vessel; (2) a vessel under 100 feet in length overall not engaged in towing; or (3) a vessel authorized by the Commander, Eleventh Coast Guard District.

[CGD11–92–01, 57 FR 9055, Mar. 16, 1992]

§ 147.1115 Platform HERITAGE safety zone.

(a) *Description:* The area within a line 500 meters from each point on the structure's outer edge. The position of the center of the structure is 34°–21′–01″ N, 120°–16′–45″ W.

(b) *Regulation:* No vessel may enter or remain in this safety zone except the following: (1) An attending vessel; (2) a vessel under 100 feet in length overall not engaged in towing; or (3) a vessel authorized by the Commander, Eleventh Coast Guard District.

[CGD11–92–01, 57 FR 9055, Mar. 16, 1992]

§ 147.1116 Platform IRENE safety zone.

(a) *Description:* The area within a line 500 meters from each point on the structure's outer edge. The position of the center of the structure is 34°–36′–37.5″ N, 120°–43′–46″ W.

(b) *Regulation:* No vessel may enter or remain in this safety zone except the following: (1) An attending vessel; (2) a vessel under 100 feet in length overall not engaged in towing; or (3) a vessel authorized by the Commander, Eleventh Coast Guard District.

[CGD11–92–02, 57 FR 9054, Mar. 16, 1992]

INDEX

SUBCHAPTER N—OUTER CONTINENTAL SHELF ACTIVITIES

EDITORIAL NOTE: This listing is provided for informational purposes only. It is compiled and kept up—to—date by the Coast Guard, Department of Transportation.

NOTE: Citations in this index are, for the most part, references to general subject matter only. The applicability of a reference to any given type of application (e.g. MODU, Platform, Manned, Unmanned, U.S., Foreign, etc.) should always be checked against the description of ''applicability'' preceding most Parts or Subparts in the regulations.

A

Alarm systems 146.105
Annual inspection, facilities 140.105
Appeals 140.25
Approved equipment 140.15
Arrival of MODU, notice of 146.202

C

Casualties:
- Criteria for reporting 146.30, 146.303
- Diving 146.40
- Pollution 146.45
- Reports required 146.30, 146.35, 146.303

Catwalk, rails required ..... 143.110(c)
Citizenship of personnel 141.5, 141.15, 141.20, 141.25, 141.30
Civil penalties 140.35
Collision damages 146.30
Communications equipment (manned platforms) 144.04–40, 146.15
Complaints, investigation of ..... 140.201(e)
Construction, exemptions during 140.5
Criminal penalties 140.35

D

Death:
- Investigation of ..... 140.201(a)
- Reporting of 146.30, 146.35, 146.303

Deficiencies 140.103
Definitions 140.10, 141.10, 147.1101
Design and equipment:
- Exemptions, existing MODUs 143.201
- Foreign design standards ..... 143.207(b)
- Foreign flag MODUs 143.207
- General ..... See Part 143
- Letter of Compliance 143.210
- U.S. flag MODUs 143.205

Undocumented MODUs 143.205
Diving casualties 146.40
Drilling, inspection prior to ..... 140.105(d)
Drills, emergency 146.125
Duties during emergency:
General 146.115
Station bill 146.130

E

Emergency drills:
During inspections ..... 140.101(c)
Duties during 146.115
Manned facilities 146.125
Station bill 146.130
Emergency equipment:
Maintenance of 146.15
On manned platforms 144.01–40
Emergency Evacuation Plan 146.140, 146.210
Emergency signals 146.110, 146.130
Employment restrictions 141.5, 141.15, 141.20
Equipment tests ..... 140.101(c)
Equivalent equipment 140.15
Evidence of citizenship 141.25
Existing MODUs, design exemptions 143.201
Exposure suits:
Foreign MODUs ..... See Subpart 144.30
U.S. and undocumented MODUs ..... See Subpart 144.20

F

Failure to comply 140.35
Fire, investigation of ..... 140.201(c)
Fire extinguishers (portable and semi-portable):
Classification of 145.05
Locations and number required 145.10
On platforms 145.01
Fire fighting equipment:
Defective ..... 140.103(c)
General ..... See Part 145
Reporting damage to 146.30, 146.35
First aid kits (manned platforms) 144.01–30
Floating OCS facilities:
Certificate of Inspection ..... 143.120(c)
Design and equipment requirements ..... 143.120(b)
General 143.120
Plan approval ..... 143.120(a)
Foreign Units:
Foreign MODUs, design and equipment 143.207
Inspection of 140.101
Letter of Compliance (MODUs) 143.210
Lifesaving equipment (exposure suits) ..... See Subpart 144.30
Load line certificates ..... 143.301(b)
Load lines ..... 143.301(a)
MODU design exemption 143.201
MODU operating standards 146.205
Ownership of ..... 141.5(b)(3), 141.10

G

General alarm system:
Emergency signals 146.110
General 146.105
Marking of 146.135
Guards and rails 143.110

H

Hazards 140.103
Helicopter landing deck:
Protection required ..... 143.110(b)

I

Immersion suits—*See* Exposure suits
IMO MODU Code ..... 140.7, 140.102, 143.207(c), 146.205(c)
Injury:
Investigation of ..... 140.201(b)
Reporting of 146.30, 146.35, 146.303
Inspections:
Annual inspection of fixed OCS facilities 140.103
Deficiencies found during 140.105
Foreign units ..... 140.101(d)
General 140.101
Prior to drilling or production ..... 140.105(d)
Unannounced inspections ..... 140.101(b)
Work vests ..... 146.20(d)
Investigations:
Death ..... 140.201(a)
General 140.201
Injury ..... 140.201(b)
Procedures governing 140.203
Subpoena power 140.205
Workplace safety ..... 142.5(b)

L

Landing, personnel 143.105
Letter of Compliance (foreign and undocumented MODUs) 143.210
Life floats (manned platforms):
Alternatives to 144.01–15
Equipment for 144.01–10
General 144.01–1
Location and launching of 144.01–5
Manning of 146.120
Marking of 146.135
Life preservers:
Lights and batteries 146.15
Marking of 146.135
On manned platforms 144.01–20
On unmanned platforms 144.10–1
Life rafts:
Manning of 146.120
Marking of 146.135
On manned platforms 144.01–15
Life rings—*See* Ring life buoys
Lifeboats:

Manning of 146.120
Marking of 146.135
On manned platforms ..... 144.01–15 (a) and (b)
Lifesaving equipment:
Defective ..... 140.103(c)
Foreign MODUs (exposure suits) ..... See Subpart 144.30
General ..... See Part 144
Manned platforms ..... See Subpart 144.01
Reporting damage to 146.30, 146.35
Undocumented MODUs (exposure suits) ..... See Subpart 144.20
Unmanned platforms ..... See Subpart 144.10
U.S. flag MODUs (exposure suits) ..... See Subpart 144.20
Lights and warning devices 143.15
Litter (lifesaving type) 144.01–35
Load lines required 143.301

M

Maintenance of emergency equipment 146.15
Manned platforms:
Lifesaving equipment required ..... See Subpart 144.01
Manning of survival craft 146.120
Markings for emergency equipment 146.135
Means of escape 143.101
Mobile Offshore Drilling Units:
Certificate of Inspection 143.210
Design and equipment requirements, U.S. flag 143.205
''Existing units'' exempt from design requirements 143.201
Exposure suits, foreign flag ..... See Subpart 144.30
Exposure suits, (U.S. and undocumented) ..... See Subpart 144.20
Foreign flag MODUs 143.201, 143.207, 146.205
General ..... See Part 143 Subpart C and Part 146 Subpart C
Letter of Compliance 143.210
Notice of arrival or relocation 146.202
Operating requirements (U.S. and undocumented) 146.203
Rebuilding existing units 143.201
Undocumented MODUs 143.205
Monthly emergency drills (manned facilities except MODUs) 146.125

N

Notice:
Of arrival of MODU 146.202
Of casualty or accident on facilities 146.30, 146.35
Of casualty or accident on vessels 146.303
Of new facilities 146.10
Of relocation of MODU 146.202

O

Oil spills:
Investigation of ..... 140.201(d)
Liability and compensation 146.45
Reporting of 146.45
Operations:
Facilities ..... See Part 146 Subpart A
Foreign MODUs 146.205
General ..... See Part 146
Manned facilities ..... See Part 146 Subpart B

U.S. and undocumented MODUs 146.203

P

Paddles (for life floats):
General ..... 144.01–10(c)
Marking of 146.135
Painter (for life floats) ..... 144.01–10(a)
Penalties 140.35, 140.40
Person in charge:
Casualties, notification of 146.30
Casualties, written reports of 146.35
Casualties involving vessels 146.303
Consultation with marine inspector ..... 140.101(c)
Custody of First Aid Kit 144.01–30
Definition of 140.10
Designation of ..... 146.5(a)
Diving casualties, reporting of 146.40
Emergency actions ..... 146.5(b)
Emergency drills, conduct of ..... 146.125(a), (c)
Emergency drills, written report of ..... 146.125(d)
Emergency duties, assignment of ..... 146.115(a)
Emergency signals, establishment of ..... 146.110(a)
Instructing personnel ..... 146.125(b)
Pollution incidents, notification of 146.45
Station bill, preparation of 146.130
Survival craft launch supervisors, assignment of 146.120
Work vests, supervision of ..... 146.20(b)
Personal flotation device (PFD)—*See* Life preservers
Personnel:
Citizenship requirements 141.5, 141.15
Duties during emergency 146.115
Evidence of citizenship 141.25
Exemption from citizenship, requests for 141.20
General ..... See Part 141
Records to be maintained on 141.35
Resident aliens 141.15, 141.20, 141.30
Station bill 146.130
Personnel landings 143.105
Pollution incidents 146.45
Portable fire extinguishers 145.01
Production, inspection prior to ..... 140.105(d)

R

Radio, on manned platform 144.01–40
Rails 143.110
Rebuilding ‘‘existing’’ MODUs 143.201
‘‘Recognized hazards’’ 142.1
Records required, employee files 141.35
Relocation of MODU, notice of 146.202
Reports:
By vessels 146.303
Collisions 146.30, 146.35
Diving casualties 146.40
Emergency drills ..... 146.125(c)
Notice of casualty or accident 146.30, 146.35, 146.303
Pollution incidents 146.45

Unsafe working conditions 142.5
Written report of casualty 146.35, 146.303
Resident aliens 141.15, 141.20, 141.30
Ring life buoys:
Marking of 146.135
On manned platforms 144.01–25
On unmanned platforms 144.10–1

S

Safety zones:
Authority to establish 147.5
Establishment of 147.10
Extent of 147.15
General ..... See Part 147
Purpose of 147.1
Sanctions—*See* Civil Penalties
Semi-portable fire extinguishers 145.01
Signals, emergency 146.110, 146.130
SOLAS ..... 140.101(d)
Stairways, rails required ..... 143.110(c)
Standby vessels ..... See Part 143, Subpart E
Station bill 146.130
Subpoena power 140.205
Survival craft:
Manning of 146.120
Marking of 146.135
Survival suits—*See* Exposure suits

U

Undocumented MODUs:
Exposure suits ..... See Subpart 144.20
General 143.205
Letter of Compliance 143.210
Operating requirements 146.203
Unmanned platforms (lifesaving equipment) ..... See Subpart 144.10
Unsafe working conditions:
Investigation of ..... 140.201(e)
Reports of 142.5

V

Vessels:
General 143.300
Inspection of 140.101, 140.102, 140.103
Load line Certificates ..... 143.301(b)
Load lines ..... 143.301(a)
Notice of casualty or accident 146.303

W

Waterlights:
On exposure suits ..... 144.20–5 and 144.30–5
On life floats (manned platforms) ..... 144.01–10(b)
On life preservers (manned platforms) ..... 144.01–20(c), 146.15
On ring life buoys (manned platforms) ..... 144.01–25(b)
On ring life buoys (unmanned platforms) ..... 144.10–1(a)(3)
Work vests:

Index

Approved type ..... 146.20(a)
General 146.20
Inspection of ..... 146.20(d)
Stowage of ..... 146.20(c)
Use of ..... 146.20(b)
Workplace safety:
General ..... See Part 142
Investigations ..... 142.5(b)
Reports of unsafe working conditions 142.5

SUBCHAPTER NN—DEEPWATER PORTS

PART 148—GENERAL

Subpart A—General

Sec.
148.1 Purpose.
148.3 Definitions.

Subpart B—Applications

GENERAL

148.101 Applicability.
148.103 Address of application staff.
148.105 Preparation.
148.107 Copies: fees.
148.109 Contents of application for issuance of license.
148.111 Optional procedures.

Subpart C—Application Proceeding

GENERAL

148.201 Purpose.
148.203 Applicability.
148.205 Clerk: docket; record.
148.207 Availability of documents in the record.
148.211 Processing an application.
148.213 Changes to an application.
148.215 Withdrawal of application.
148.216 Request by port for determination.
148.217 Designation of adjacent coastal States.
148.219 Claims and objections.

INFORMAL PUBLIC HEARING

148.231 Notice of public hearing.
148.233 Testimony and argument.
148.235 Report of public hearing.

FORMAL HEARING

148.251 Determination to hold formal hearing: notice of formal hearing.
148.253 Assignment of administrative law judge: disqualification.
148.255 Jurisdiction of the administrative law judge.
148.257 Authority of the administrative law judge.
148.259 Ex parte communications.
148.261 Parties.
148.263 Intervention.
148.265 A person not a party.
148.267 Appearance and practice.
148.269 Requirements for documents.
148.271 Subscription.
148.273 Filing.
148.275 Service of document: other transmittal.
148.277 Conferences.
148.279 Motions.
148.281 Subpoenas.
148.283 Hearing date.
148.285 Reporter: transcript; corrections.
148.287 Order of procedure.
148.289 Evidence.
148.291 Rulings referred or appealed to the Commandant.

APPLICATION APPROVAL OR DENIAL

148.321 Decision process generally.
148.323 Criteria and considerations.
148.325 Multiple applications.
148.327 Termination of proceeding before approval or denial of an application.

Subpart D—Issuance of a License

148.400 Applicability.
148.403 Issuance of a license.
148.405 Term of license.
148.407 Consultation with adjacent coastal States.

Subpart E—Site Evaluation

148.501 Purpose.
148.503 Notice of proposed site evaluation activities.
148.505 General conditions of performance.
148.507 Reports.
148.509 Suspension and prohibition of activities.

Subpart F—Procedure for Exemption From Any Requirement in Deepwater Port Regulations

148.601 Applicability.
148.603 Petition for exemption.
148.605 Coordination with states.
148.607 Exemption criteria.

Subpart G—Limits of Liability

148.701 Purpose.
148.703 Limits of liability.

APPENDIX A TO PART 148—ENVIRONMENTAL REVIEW CRITERIA FOR DEEPWATER PORTS

AUTHORITY: Secs. 5(a), 5(b), Pub. L. 93–627, 88 Stat. 2131 (33 U.S.C. 1504(a), (b)); 49 CFR 1.46(s).

SOURCE: CGD 75–002, 40 FR 52553, Nov. 10, 1975, unless otherwise noted.

Subpart A—General

§ 148.1 Purpose.

This subchapter prescribes regulations for the licensing, construction, design and equipment, and operation of deep-water ports.

§148.3 Definitions.

The terms listed in sections 3 and 18 of the Act, whenever used in Parts 148, 149 and 150, have the same meaning they have in the Act, except as provided in this section for ''Affiliate.''

Act means the Deepwater Port Act of 1974.

Affiliate means each person:

(1) Having any direct or indirect ownership interest in the applicant of greater than three percent;

(2) With whom the applicant has made, or proposes to make, a significant contract for financing, managing or otherwise participating in the construction or operation of the deepwater port proposed to be licensed;

(3) Who owns or controls any person who is an affiliate by operation of paragraphs (a) or (b) of this definition, or who owns or controls the applicant;

(4) Owned or controlled by or under common ownership or control with an applicant or any person who is an affiliate by operation of paragraphs (a), (b) or (c) of this definition; or

(5) Who is determined by the Secretary to have information required to review or process the application.

Barrel means 42 U.S. gallons at atmospheric pressure and 60 °Fahrenheit.

Captain of the Port means a Coast Guard Officer commanding a Captain of the Port Area described in Part 3 of this chapter.

Crude oil means a mixture of hydrocarbons that exist in the liquid phase in natural underground reservoirs and remains liquid at atmospheric pressure after passing through surface separating facilities and includes:

(1) Liquids technically defined as crude oil;

(2) Small amounts of hydrocarbons that exist in the gaseous phase in natural underground reservoirs but are liquid at atmospheric pressure after being recovered from oil well (casing head) gas in lease separators; and

(3) Small amounts of non-hydrocarbons produced with the oil.

Deepwater port means any fixed or floating manmade structures other than a vessel, or any group of such structures, located beyond the territorial sea and off the coast of the United States and which are used or intended for use as a port or terminal for the loading or unloading and further handling of oil for transportation to any State, except as otherwise provided in section 23 of the Act. The term includes all associated components and equipment, including pipelines, pumping stations, service platforms, mooring buoys, and similar appurtenances to the extent they are located seaward of the high water mark.

Gross under keel clearance means the distance between the keel of a tanker and the ocean bottom when the tanker is moored or anchored in calm water free of wind, wave, current, or tide conditions that would induce ship motion.

Marine site means the area in which the deepwater is located, and includes the safety zone, attendant ships' routing measures, anchorages and all areas seaward of the high water mark in which associated components and equipment of the deepwater port are located.

Miles means nautical miles.

Net under keel clearance means that distance between the ocean bottom and the portion of a tanker's hull closest to the ocean bottom when the tanker is underway, moored or anchored, considering ship motion in responding to the combination of actual wind, wave, tide, and current conditions.

PAD District means one of the five Petroleum Administration for Defense Districts defined by the Bureau of Mines, Department of the Interior.

Platform means a fixed structure which rests on or is embedded in the sea-bed that has floors or decks in which an activity or specific function may be carried out.

Production District means a State and each district within the State of Louisiana, New Mexico or Texas for which production of crude petroleum is separately reported by the Bureau of Mines, Department of the Interior.

Pumping platform complex (PPC) means a single platform or a series of interconnected platforms that have one or more of the following capabilities:

(1) Pumping oil between a vessel and the shore.

(2) Berthing and messing facilities for assigned personnel.

(3) Landing area for helicopters.

(4) Mooring and loading for small vessels.

Refining District means a refining district as defined by the Bureau of Mines, Department of the Interior, for reporting refining operations.

SPM means single point mooring buoy.

Year-end proved reserves of crude oil means the estimated quantities of all liquids statistically defined as crude oil, which geological and engineering data demonstrate with reasonable certainty as of December 31 of the year concerned to be recoverable in future years from known reservoirs under existing economic and operating conditions. Reservoirs are considered proved if economic producibility is supported by either actual production or conclusive formation tests. The area of an oil reservoir considered proved includes:

(1) That portion delineated by drilling and defined by gas-oil or oil-water contacts, if any; and

(2) The immediately adjoining portions not yet drilled, but which can be reasonably judged as economically productive on the basis of available geological and engineering data.

In the absence of information on fluid contacts, the lowest known structural occurrence of hydrocarbons controls the lower proved limit of reservoir. Reserves of crude oil which can be produced economically through application of improved recovery techniques (such as fluid injection) are included in the ''proved'' classification when successful testing by a pilot project, or the operation of an installed program in the reservoir, provides support for the engineering analysis on which the project or program was based.

[CGD 75–002, 40 FR 52553, Nov. 10, 1975, as amended by CGD 76–096, 45 FR 85647, Dec. 29, 1980]

Subpart B—Applications

GENERAL

§ 148.101 Applicability.

This subpart prescribes rules that apply to each application, including competing applications described in section 5(d)(3) of the Act, for the issuance of a license for the ownership, construction, and operation of a deepwater port.

§ 148.103 Address of application staff.

The address of the application staff is: Commandant (G–M), U.S. Coast Guard, 2100 Second Street SW., Washington, DC 20593–0001.

[CGD 92–069, 58 FR 11193, Feb. 24, 1993]

§ 148.105 Preparation.

(a) Any person may confer with the application staff concerning the preparation of an application.

(b) An applicant may incorporate by clear and specific reference in his application any:

(1) Standard reference material upon which he relies and which he knows to be readily available to Federal and State Agencies;

(2) Current information contained in previous applications or reports that he has submitted to the application staff; and

(3) Current information contained in a tariff, report or other document previously filed for public record with the Interstate Commerce Commission, the Securities and Exchange Commission, or the Federal Energy Administration, provided:

(i) A certified true and complete copy of the document is attached to each of 10 of the 60 copies of the application required by § 148.107(a);

(ii) Each copy filed with the application bears on its cover notation of the date of filing and the document number or other locator; and

(iii) Any verification or certification required for the original filing (other than from auditors or other independent persons) is brought current to a date not earlier than 30 days prior to the date of the application.

(c) If any required information is furnished pursuant to § 148.111(b), the application need only state with respect thereto, in the appropriate place or places: ''Required information is being furnished by [named affiliate] [all affiliates] pursuant to § 148.111(b).''

§ 148.107 Copies: fees.

(a) Sixty copies of each license application must be submitted to the application staff.

(b) One copy of each license application must be submitted to the U.S. Army Corps of Engineers District office

having jurisdiction over the proposed port.

(c) A nonrefundable application fee of $100,000 must be submitted with each application for issuance of a license. If additional information is necessary to make an application complete, no additional application fee is required.

(d) The costs incurred by the United States in processing an application will be charged to the application fee until it is exhausted. Reimbursement for additional processing costs, above the application fee, must be submitted to the application staff when assessed.

(e) Fees and costs assessed under this section must be made payable to the United States Treasury.

§148.109 Contents of application for issuance of license.

Each application must include the following:

(a) *Identity of applicant and affiliates.* (1) The name, address and principal business activity of the applicant and of each affiliate.

(2) A list of all domestic subsidiaries and a list of all foreign subsidiaries of each applicant and of each affiliate that elects under §148.111(a) to furnish required information on a consolidated basis.

(3) The name, address and principal business activity of each subsidiary or division of an applicant or an affiliate which participated directly and substantially in the planning, evaluating or approving of participation in the construction, financing, or operation of a deepwater port.

(b) *Proof of citizenship and authority.* (1) If the applicant is an individual, group of individuals, a partnership or an association, an affidavit from each individual stating that he is a citizen of the United States of America.

(2) If the applicant is a corporation, one copy of its charter or instrument by which the corporation is formed and organized under general corporation laws, certified by the Secretary of State or other appropriate authority of the State in which incorporated, and a copy of its by-laws certified by its Secretary or an Assistant Secretary.

(3) If the applicant is a State, or combination of States, or any political subdivision, agency, or instrumentality of a State, including a wholly owned corporation, a copy of the laws authorizing the operations detailed in the application.

(c) *Address for service of documents.* The name and address of a person upon whom service may be made if a formal hearing is held on the application and the name and address of a person to whom documents not required to be served under §148.275 may be sent.

(d) *Verification.* A statement at the end of the application subscribed and sworn to before a notary public that the individual who signed the application has read it and that its contents are true to his best knowledge and belief.

(e) *Financial information.* (1) For each applicant and affiliate:

(i) Its most recent annual financial statement, including an income statement and a balance sheet, accompanied by an opinion of a certified public accountant; and

(ii) An interim income statement and balance sheet for each subsequent fiscal quarter-year ended prior to 30 days before submission of the application.

(2) The proposed location and capacity of the deepwater port, including all components thereof, together with a general description of the anticipated use of the deepwater port during the expected life of the project.

(3) An estimate of construction costs, by phases together with estimated dates or periods for completion of each phase, or annually, and a detailed estimate of the cost of removal of all marine components of the deepwater port, other than pipelines lying below the seabed.

(4) Annualized projections or estimates of each of the following, at reasonable intervals throughout the expected useful life of the deepwater port:

(i) Total oil throughput together with subtotals of throughput of oil owned by the applicant and affiliates and of throughput of oil owned by others.

(ii) Annual revenue.

(iii) Annual operating expenses, showing separately any anticipated management fee, payment, allowance,

or credit to any affiliate for management or operation of the port or any component.

(5) A copy of every agreement or proposal relating to the ownership or management of a deepwater port or any of its components or to the financing of the construction or operation of the deep-water port or component, including those relating to throughputs, capital contributions, loans, guarantees, and commitment therefor.

(6) To the extent known to the applicant or any affiliate, every existing or proposed:

(i) Tariff or portion thereof to be filed with the Interstate Commerce Commission;

(ii) Rate or joint rate; and

(iii) Agreement, arrangement or understanding with respect to terms or conditions on which other persons may become an affiliate or with respect to minimum or maximum tenders or other economic restrictions on shipments by nonaffiliated persons.

If any item required by this subparagraph has not been determined, an explanation of the basis on which it will be determined must be included.

(7) To the extent known to the applicant or any affiliate, the anticipated:

(i) Total annual demand for crude oil; and

(ii) Total year-end proved reserves of crude oil for each Production District within the PAD District in which oil from the proposed deepwater port is to be landed, at reasonable intervals throughout the expected useful life of the deepwater port.

(8) To the extent known to the applicant or any affiliate, the anticipated:

(i) Total refinery capacity;

(ii) Total runs to stills; and

(iii) Total demand for gasoline, for jet aviation fuels, for distillate fuel oils, and for other refinery products, for each Refining District within the PAD District in which oil from the deepwater port is to be landed, at reasonable intervals throughout the expected useful life of the deepwater port.

(9) If the PAD District in which oil from deepwater port is to be landed has a surplus:

(i) Of crude oil production and imports over refinery capacity, the information required in paragraph (e)(7) of this section must also be set forth for each Production District within the PAD Districts to which surplus crude oil from the District in which oil from deepwater port is landed is expected to be transported; and

(ii) Of refinery capacity over demand for refinery products, the information required in paragraph (e)(8) of this section must also be set forth for each Refining District within the PAD Districts to which surplus refinery products from the PAD District in which oil from the deepwater port is landed is expected to be transported. If this includes the East Coast Refining District, the information for that district must be separately stated for the following three components:

(*a*) New England: The States of Massachusetts, Rhode Island, and Connecticut.

(*b*) South-Atlantic: The States of Virginia, North Carolina, South Carolina, Georgia, and Florida.

(*c*) Mid-Atlantic: The remaining area of the East Coast Refining District (Maine, Vermont, New Hampshire, New Jersey, Maryland, Delaware, District of Columbia, and the eastern parts of New York and Pennsylvania).

(10) From each applicant or affiliate which is engaged in producing, refining, or marketing oil, its estimate of its components of the totals required to be included under the provisions of paragraphs (e)(7), (8) and (9) of this section.

(11) From each applicant or affiliate engaged in producing, refining, or marketing oil, for each item it is required to supply under paragraph (e)(10) of this section, its actual data for each of the three calendar years immediately prior to the date of application.

(12) From each applicant or affiliate which has a significant interest in any refinery within any refinery district on which information is required to be disclosed under paragraphs (e)(8) or (9)(ii) of this section, for each refinery, its:

(i) Location;

(ii) Runs to still for each of the three calendar years prior to date of application; and

(iii) Production for each of the three calendar years prior to date of application of gasoline, jet aviation fuel, distillate fuel oils, and other products.

(13) From each applicant or affiliate engaged in producing, refining or marketing oil, for each of the three calendar years immediately prior to the date of application, its total domestic and total worldwide: yearend proved reserves; annual production imports into the United States; and annual refinery runs to still and production of gasoline, jet aviation fuel, distillate fuel oils and other refinery products.

(f) *General technical information.* (1) A description of the experience of the applicant, each affiliate of the applicant that the applicant may want to provide, and each consultant of the applicant in offshore operations, with particular emphasis on involvement in offshore transfer and storage of liquid cargo and vessel loading and unloading operations.

(2) A listing and abstract of each study relied upon by the applicant and a listing and abstract of each ongoing or completed study pertaining to deepwater ports conducted by or for the applicant, later supplemented by data of particular environmental or operational concern from specific studies identified by the Coast Guard.

(3) The name, address, citizenship and telephone number of each affiliate of the applicant together with a description of the manner in which the affiliate is associated with the applicant.

(4) The name, address, citizenship, telephone number and qualifications of each engineering firm, if known, that will design the deepwater port, or any portion of the port.

(5) The ownership interest in the applicant of each affiliate having any ownership interest in the applicant of greater than 3 percent.

(6) For each affiliate with whom the applicant has made, or proposes to make a significant contract for the construction of any part of the deepwater port, a description of that affiliate's experience in construction of marine terminal facilities, offshore structures, underwater pipelines, seabed foundations or any other experience that would bear on his qualification to participate in the construction of a deepwater port.

(7) A copy of each contract made by the applicant for the construction of any component of the deepwater port or for the operation of the port.

(g) *Water.* Evidence that the requirements of section 401(a)(1) of the Federal Water Pollution Control Act Amendments of 1972, 33 U.S.C. 1341(a)(1), will be satisfied, except that, in those cases where certification under section 401(a)(1) must be obtained from the Administrator of the United States Environmental Protection Agency, the request for such certification must accompany each application for a license under the Act.

(g–1) *Coastal zone management.* The certification, or certifications, required by section 307 of the Coastal Zone Management Act of 1972, as amended.

(h) *Lease block identification.* (1) Identification of each lease block established either by the Secretary of the Interior under section 5 of the Outer Continental Shelf Lands Act (43 U.S.C. 1334), or by a State under t—e authority of section 3 of the Submerged Lands Act (43 U.S.C. 1311), within which any part of the proposed deepwater port or its approaches are located. This identification should be made using Official Outer Continental Shelf Leasing Maps or Protraction diagrams where they are available. For each identified lease block, the following must be provided:

(i) A description of each pipeline, or other right-of-way crossing, in enough detail to allow plotting of rights-of-way and facilities to the nearest one-tenth of a second in latitude and longitude.

(ii) The identity of the lessee of each pipeline or other right-of-way.

(2) Detailed information concerning any interest that the applicant and others have in each block and concerning the present and planned use of each block.

(i) *Overall site plan.* Single-line drawings showing the location and type of each component of the proposed deepwater port and its necessary facilities, including floating structures, fixed structures, aids to navigation, manifold systems and onshore storage areas, pipelines, and refineries.

(j) *Site plan for marine components.* A site plan consisting of:

(1) The proposed size and location of:

(i) All fixed and floating structures;

(ii) SPM swing circles;

(iii) Maneuvering areas;

(iv) Recommended ships' routing measures and proposed vessel traffic patterns in the port area;

(v) Recommended anchorage areas;

(vi) Recommended mooring area for support vessels;

(vii) Required and recommended aids to navigation; and

(viii) Pipelines and cables within the marine site;

(2) The charted water depth throughout the proposed marine site as verified by the reconnaissance hydrographic survey required by this subpart:

(3) A reconnaissance hydrographic survey of the proposed marine site.

NOTE: A requirement to submit an engineering hydrographic survey of the final marine site will be imposed as a license condition.

(k) *Soil data.* An analysis of the general character and condition of the ocean bottom and sub-bottom throughout the marine site and along the path of the pipeline to the shore, including an opinion by a registered professional engineer specializing in soil mechanics concerning:

(1) The suitability of the soil to accommodate the anticipated design load of each marine component that will be fixed to or supported on the ocean floor; and

(2) The stability of the seabed when exposed to the environmental forces resulting from severe storms, or to lesser forces that continue for an extended period, including any history of accretion or erosion of the coast line in proximity to the marine site.

(l) *Operational information.* (1) The maximum lengths, maximum drafts, and maximum deadweight tonnages of the tankers to be accommodated at each SPM.

(2) Calculations with supporting data and other documentation to show that the charted water depth at each proposed SPM location is sufficient to provide at least a 5 foot net under keel clearance for each tanker that the applicant expects to be accommodated at the SPM.

(3) A detailed description of the manner of forecasting the wind, wave, and current conditions described in the draft Operations Manual during which the following would occur:

(i) Shutdown of oil transfer operations.

(ii) Departure of the tanker from the mooring.

(iii) Prohibition on mooring to an SPM.

(iv) Shutdown of all operations and evacuation of the port.

(4) The speed limits proposed for tankers in the safety zone.

(m) *Floating components data.* (1) A description and preliminary design drawing of each floating component, including the hoses and the anchoring or securing structure and navigation lights if the component is a mooring buoy.

(2) The design criteria, developed pursuant to Part 149 of this chapter, to which each floating component is to be designed and built.

(3) The design standards and codes to be used.

(4) The title of each recommended engineering practice to be followed.

(5) A description and the results of any design and evaluation studies performed by or for the applicant on a floating component.

(6) A description of safety, fire fighting, and pollution prevention equipment to be used on each floating component.

(7) A description of lighting to be used on floating hoses for night detection.

(n) *Fixed marine components data.* (1) A description and preliminary design drawing of each fixed marine component.

(2) The design criteria, developed pursuant to Part 149 of this chapter, to which each fixed marine component is to be designed and built.

(3) The design standards and codes to be used.

(4) The title of each recommended engineering practice to be followed.

(5) A description and the results of any design and evaluation studies performed by or for the applicant for any fixed marine component and utilized in the development of the application.

(6) A description of navigational lighting, safety, lifesaving, fire fighting, pollution prevention and removal, and waste treatment equipment to be installed.

(7) A description and preliminary design drawing of the oil pumping equipment, piping system, control and instrumentation system, and any associated equipment, including the oil throughput measuring equipment, leak detection equipment, alarm system, and emergency shutdown equipment.

(8) The personnel capacity of each PPC.

(o) *Offshore pipeline data.* (1) A description and preliminary design drawing of the marine pipeline, including size, throughput capacity, length, depth and protective devices.

(2) The design criteria to which the marine pipeline is to be designed and built.

(3) The design standards and codes to be used.

(4) The title of each recommended engineering practice to be followed.

(5) A description of the metering system to be used to measure flow rate.

(6) Information concerning all submerged or buried pipelines that will be crossed by the offshore pipeline and the manner in which the crossing will be made.

(p) *Onshore components data.* (1) A description of the location, capacity, and ownership of, and a preliminary design drawing for construction of new or expansion of existing onshore pipelines, storage facilities, refineries, petrochemical facilities, and transshipment facilities to be served by the deepwater port.

(2) Location, capacity, and ownership of existing onshore pipelines, storage facilities, refineries, petrochemical facilities, and transshipment facilities to be served by the deepwater port.

(3) A chart showing the location of all planned and existing onshore pipelines, storage facilities, refineries, and petrochemical facilities and transshipment facilities to be served by the deepwater port.

(4) From each applicant or affiliate which is engaged in producing, refining or marketing oil, throughput of crude oil, of gasoline, of jet aviation fuel, of distillate fuel oils and of other refinery products, for the calendar year preceding the date of application, and a copy of each existing or proposed throughput agreement.

(5) A facility is served by the deepwater port if it is within a PAD District for which information is required under paragraph (e)(7), (8) or (9) of this section and is either served by connection with a common carrier pipeline or a component of or appurtenant to a common carrier pipeline.

(6) Crude oil gathering lines and lines wholly within a facility must be included only if specifically required under paragraph (z) of this section. Entry points and major connections between lines and with bulk purchasers must be included.

(q) *Miscellaneous components data.* (1) A description of the communications systems to be used in operation of the deepwater port.

(2) A description of the radar navigation system to be used in operation of the deepwater port to include the type and characteristics of the radar and the antenna location.

(3) A description of plans and method of bunkering vessels using the deepwater port.

(4) Type, size and number of vessels to be used in bunkering, mooring, and servicing the vessels using the deepwater port.

(5) A description and exact location of any shore based support facilities to be provided for vessels described in paragraph (q)(4) of this section.

(r) *Construction procedures.* A description of the method and procedures to be used in constructing each component of the deepwater port and a description of each phase, including anticipated dates of completion for each of the specific components.

(s) *Draft Operations Manual.* A draft Operations Manual for the proposed port prepared in accordance with the ''Guidelines for Preparation of a Deepwater Port Operations Manual''. If required information is not available, an applicant should so state, show why, and state when the information can be expected to be provided.

(t) *Environmental analysis.* An environmental analysis prepared in accordance with ''Guide to Preparation of Environmental Analyses for Deepwater Ports.''

(u) *Aids to Navigation.* (1) For each proposed aid to navigation, the proposed position of the aid described by latitude and longitude coordinates to the nearest second or tenth of a second as determined from the largest scale chart of the area in which the aid is to be located. (Latitude and longitude should be specified to a level obtained by visual interpolation between the finest graduation of the latitude and longitude scales on the chart.)

(2) For each proposed obstruction light and the proposed rotating lighted beacon, the color, characteristic, effective intensity, height above water, and general description of illumination apparatus.

(3) For each proposed fog signal on a structure, a general description of the apparatus.

(4) For each proposed buoy, the shape, color, number or letter, and depth of water in which located, and a general description of any light or fog signal apparatus installed.

(5) For the proposed radar beacon (RACON), height above water and a general description of the apparatus.

(v) *Telecommunications equipment.* A description of the radio stations or other communications facilities and the proposed concept of operation to serve the deepwater port during construction or operation.

NOTE: Federal Communications Commission application for these facilities may be submitted directly to the Federal Communications Commission when sufficient technical information is available to meet the rules of that agency. The holding of appropriate Federal Communications Commission licenses will be made a condition on a deepwater port license.

(w) *National Pollutant Discharge Elimination System Information.* To the extent available, the information prescribed by, and submitted on, the ''National Pollutant Discharge Elimination System'' (NPDES). Application for Permit to Discharge, Short Form ''D'' for applying for issuance of a discharge permit to the Administrator of the Environmental Protection Agency (EPA). If complete information is not available by the time the Secretary must either approve or deny the application for a designated application area, under section 5(i)(1) of the Act, the license is conditioned upon the applicant receiving the required discharge permit from the EPA prior to the commencement of any discharge requiring the same.

(x) *Discharge of dredged or fill material.* The information prescribed by, and submitted on, Form EP 1145–2–1 contained as Appendix B of ''Application for Department of Army Permits for Activities in Waterways, EP 1145–2–1 of 1 October 1974'' for each permit issued by the Secretary of the Army in compliance with:

(1) Section 10 of the Rivers and Harbors Act of 1899 (30 Stat. 1151; 33 U.S.C. 403);

(2) Section 404(b) of the Federal Water Pollution Control Act Amendments of 1972 (86 Stat. 816; 33 U.S.C. 1251); or

(3) Section 103 of the Marine Protection, Research, and Sanctuaries Act of 1972 (86 Stat. 1052; 33 U.S.C. 1401).

(y) *Additional Federal authorizations required.* All other applications for Federal authorizations required for ownership, construction, and operation of a deepwater port not listed elsewhere in this subpart.

(z) *Supplemental information.* (1) A designation of locations where the applicant and each affiliate has segregated and filed documents in its possession relating to deepwater ports which were prepared within four years of the date of application and which fall under one or more of the following categories:

(i) Prepared by or for, or submitted to, a Board of Directors or an executive, management or planning committee.

(ii) Concern the financing of construction or operation of a deepwater port, including throughput nominations and membership in and financing of any existing or proposed joint venture.

(iii) Concern existing or proposed or anticipated rates or joint rates.

(iv) Determined by the Secretary to be required to review and process the application.

(2) Documents referred to in paragraph (z)(1) of this section must be

available during normal business hours to the Secretary or the General Counsel of the Department of Transportation or the designate of either of them, for inspection and copying, at the locations designated in the application unless the General Counsel requires consolidation of documents from two or more locations. If any claim of privilege or immunity is asserted with respect to any document or record designated for inspection or copying, the person making the claim shall furnish to the Secretary or the General Counsel or his designate as the case may be, in accordance with § 148.219(c), an identification of the document and statement of the claim.

(3) The Secretary may require an applicant or affiliate to make available for examination under oath or for interview persons having, or believed to have, designated information. Interviews and examinations are conducted by or at the direction of the General Counsel.

(4) The Secretary may require an applicant or affiliate to file as a supplement to the application any analysis, explanation or detailing of information in the application or any other information determined by the Secretary to be required to review or process the application.

(5) Any Federal or State department or agency or other interested person may file with the clerk a request or recommendation for further information. Requests and recommendations received within 30 days after notice of the initial application has been published will be fully considered before any final determination is made under this paragraph (z). Requests and recommendations must include a brief statement of the purpose of any proposed requirement, including, if it relates to conduct, the nature of the conduct and the probable consequences, or if the proposed requirement relates to physical characteristics, the nature of any safety, health, environmental or economic concerns.

(6) In exercising the authority to require supplemental information under paragraph (z)(2), (3) or (4) of this section, the Secretary, the General Counsel, or the designate, as the case may be, may fix a time by which an applicant or affiliate must meet the requirement. If an application states that required information is not yet available but will be furnished at a later date, the Commandant may specify a time by which the information must be provided. If any requirement is not met by a time fixed in accordance with this subparagraph, the Secretary shall determine whether compliance with the requirement is material to processing of the application within the time prescribed in the Act. If the Secretary determines that it is material, he may disapprove the application, or may suspend the application pending a determination that processing can be resumed. The period of any suspension shall not be counted in determining the date prescribed by the time limit set forth in sections 4(c)(6), 5(d)(3), 5(e)(2), 5(g), 7(b)(1) or 9(b)(1) of the Act.

[CGD 75–002, 40 FR 52553, Nov. 11, 1975; 40 FR 58144, Dec. 15, 1975, as amended by CGD 76–096, 45 FR 85647, Dec. 29, 1980]

§ 148.111 Optional procedures.

(a) *Consolidated statements.* Applicants and affiliates may elect to supply required information consolidated in accordance with generally accepted accounting principles, if and to the extent that consolidated statements or reports are filed with the Interstate Commerce Commission, the Securities and Exchange Commission, or the Federal Energy Administration, but if those filings are also made or required to be made by line of business or other classifications, the application shall be prepared on the same basis. An election under this paragraph is subject to the authority of the Secretary to require supplemental information, pursuant to § 148.109(z).

(b) *Direct submissions by affiliates.* If any affiliate has reason to believe that it or its business or property would be prejudiced by furnishing information required from it to the applicant, the affiliate may file the required information directly with the clerk. The information must be enclosed in a sealed envelope bearing on the outside the names of the applicant and affiliate and the date or anticipated date of the application. If any claim of privilege or confidentiality is asserted with respect

to the contents, the procedure specified in § 148.219(c) or (d) must be followed.

Subpart C—Application Proceeding

GENERAL

§ 148.201 Purpose.

This subpart prescribes rules of procedure and practice for application proceedings.

§ 148.203 Applicability.

(a) Except as provided in paragraph (b) of this section, the rules in this subpart apply to each application proceeding.

(b) The rules for formal hearings in §§ 148.251—148.291 apply only to application proceedings in which the Commandant issues a notice of formal hearing under § 148.251. The rules for informal hearings in §§ 148.231—148.235 apply only to proceedings to consider applications for issuance, transfer, and renewal of a license.

§ 148.205 Clerk: docket; record.

(a) The mailing address for the clerk in each proceeding is: Commandant (G–M), U.S. Coast Guard, 2100 Second Street SW., Washington, DC 20593–0001.

(b) The clerk maintains a docket and the record for each proceeding. The docket lists each document in the record. The record contains all documents filed or issued in the proceeding that the clerk has received and any other documents in the proceeding that are docketed in accordance with this subpart.

[CGD 75–002, 40 FR 52553, Nov. 10, 1975; 40 FR 58143, Dec. 15, 1975, as amended by CGD 92–069, 58 FR 11193, Feb. 24, 1993]

§ 148.207 Availability of documents in the record.

(a) The procedure for inspecting and copying documents in the record of a proceeding is contained in 49 CFR part 7 and section 14 of the Act. Copies of documents in the record of a proceeding are mailed to each adjacent coastal State unless their release is prohibited by 49 CFR part 7 and section 14 of the Act.

(b) Comments submitted by Federal agencies and departments for each proceeding in accordance with sections 5(e)(2) and 7(b) of the Act are docketed when they are received. Copies of the draft and final environmental impact statements prepared in accordance with section 5(f) of the Act are docketed when they are transmitted to the Council on Environmental Quality.

(c) The applicant must designate any portions of the material submitted in an application that contain either trade secrets or commercial or financial information that is claimed to be privileged or confidential. Section 148.219 prescribes procedures for objecting to claims and resolving of disputed issues.

(d) A copy of the application, except trade secrets and confidential information, is available for inspection and copying at: Commandant (G–M), U.S. Coast Guard, 2100 Second Street SW., Washington, DC 20593–0001.

(e) The application staff will designate a custodian of all documents filed in a proceeding for which protection is claimed under section 14(b) of the Act. The custodian shall not make public for inspection documents for which protection is claimed nor otherwise disclose such information, unless the General Counsel is of the opinion that the disclosure is not inconsistent with the requirements of section 14(b) of the Act. The custodian shall keep a record of all officers and employees of the Department having custody of any copy or copies of undisclosed documents.

[CGD 75–002, 40 FR 52553, Nov. 10, 1975, as amended by CGD 92–069, 58 FR 11193, Feb. 24, 1993]

§ 148.211 Processing an application.

The Assistant Commandant for Marine Safety and Environmental Protection takes the action described in section 5(c)(1) of the Act for processing each application received in a proceeding and for issuing in the FEDERAL REGISTER the notices described in section 5(c)(1). If he issues notice of application pursuant to section 5(c)(1) of the Act, the application staff thereafter delivers the application described in the notice to the clerk for docketing and mails a copy of the notice to each:

(a) Party;

(b) Adjacent coastal State; and

(c) Other coastal State bordering on the body of water in which the proposed port would be located.

[CGD 75–002,40 FR 52553, Nov. 10, 1975 as amended, at CGD 88–052, 53 FR 25121, July 1, 1988; CGD 96–026, 61 FR 33665, June 28, 1996; CGD 97–023, 62 FR 33363, June 19, 1997]

§ 148.213 Changes to an application.

If information in an application becomes materially inaccurate or incomplete after it is docketed in a proceeding but before the proceeding is terminated, the applicant must promptly file an amendment furnishing the corrected or additional information. Sixty copies of the amendment must be submitted to the application staff when the revisions are filed.

§ 148.215 Withdrawal of application.

An applicant may withdraw his application in a proceeding at any time before the proceeding is terminated by delivering or mailing notice of withdrawal to the clerk for docketing.

§ 148.216 Request by port for determination.

A port which applies for a determination under section 4(d) of the Act must submit a request in writing to the application staff within 30 days of the date that notice of application is published in the FEDERAL REGISTER. The request must:

(a) Be signed by the highest official of the port submitting the request;

(b) Contain a copy of existing plans for the construction of a deep draft channel and harbor;

(c) Certify that the port has an active study by the Secretary of the Army for the construction of a deep draft channel and harbor, or that the port has pending an application for a permit under section 10 of the Act of March 3, 1899 (30 Stat. 1121) for the construction;

(d) Provide any available documentation on:

(1) Initial costs, by phases if staged development, for the proposed onshore project, including dredging, ship terminal and attendant facilities;

(2) Estimated annual operating expenses by phases, if staged development, including labor, for thirty years for all elements of the project;

(3) Estimated time of completion of all elements of the proposed project;

(4) An estimate of the volume of ship traffic, the volume and variety of the tonnage, an assessment of the potential traffic congestion conditions in the port and an assessment of the capability of the port for controlling vessel traffic as a result of the proposed dredging project;

(5) An assessment of the economic benefits estimated to be derived from the project, including:

(i) Economic contribution to the local, and regional area;

(ii) Induced industrial development;

(iii) Increased employment;

(iv) Increases in tax revenues; and

(v) Any other factors; and

(6) An assessment of the environmental and social impact of the project on elements of the local and regional community; and

(e) Provide a statement of its views on whether it seeks a determination that the State port best serves the national interest or that both developments are warranted.

§ 148.217 Designation of adjacent coastal States.

(a) The Assistant Commandant for Marine Safety and Environmental Protection, in issuing a notice of application pursuant to section 5(c)(1) of the Act, designates as an adjacent coastal State each State which would be directly connected by pipeline to the deepwater port proposed in the application or which is within 15 miles of the proposed deepwater port. A State not designated as an adjacent coastal State in the notice of application may request to be so designated on the basis that the risk of damage to its coastal environment is equal to or greater than the risk posed to a State directly connected by pipeline to the proposed deepwater port.

(b) Each request submitted under paragraph (a) of this section must:

(1) Be submitted in writing to the application staff within 14 days after the date of publication of the notice of application in the FEDERAL REGISTER;

(2) Be signed by the Governor of the State;

(3) Set forth the facts and any available analyses in support of the request

together with any available documentation concerning the risk of damage to the coastal environment of the requesting State that could occur as a result of the establishment of a deepwater port; and

(4) State why the requesting State believes the risk of damage to its coastal environment is equal to or greater than the risk posed to a State connected by a pipeline to the proposed deepwater port.

(c) The application staff transmits a copy of each request submitted in accordance with paragraph (b) of this section to the Administrator of the National Oceanic and Atmospheric Administration and requests his recommendations within a period of time that will allow the Secretary to determine the matter within 45 days after the date the request was received.

(d) If, after having received the recommendation of the Administrator of the National Oceanic and Atmospheric Administration, the Secretary determines that there is a risk of damage to the coastal environment of the requesting State equal to or greater than the risk posed to a State directly connected to the proposed deepwater port, he grants the request and designates the requesting State as an adjacent coastal State. If he determines that there is not such a risk, he denies the request and so notifies the Governor of the requesting State.

[CGD 75–002, 40 FR 52553, Nov. 10, 1975, as amended by CGD 88–052, 53 FR 25121, July 1, 1988; CGD 96–026, 61 FR 33665, June 28, 1996; CGD 97–023, 62 FR 33363, June 19, 1997]

§ 148.219 Claims and objections.

(a) Any person required to furnish information may assert, as ground for relief from the requirement, any failure to comply with this part or any other constitutional or legal right or privilege.

(b) In general, claims relating to documents must be made on filing an application or on receiving a determination by the Secretary pursuant to § 148.109(z).

(c) If a person claims attorney-client privilege, he must identify the communication by date, type of communication, persons making and receiving the communication, and general subject matter. If the required information is in a separable part of a communication, such as an attachment to a letter, the separate part must be similarly identified. The identification must be filed with the clerk or as a document pursuant to § 148.269.

(d) Any document claimed to be protected by section 14(b) of the Act must be placed in a sealed envelope, containing the name of the person claiming the protection and of the applicant, and the date or anticipated date of the application. A brief statement of the basis of the claim must be included, either on the envelope or separately. If a number of documents are involved, they must be grouped according to nature of claim, and a self-explanatory numbering system used for envelopes and documents.

(e) Written objection to any claim may be made by any Federal or State department or agency, or any applicant, affiliate, party or other interested person. The objection shall include a brief statement of its basis and identify the documents to which it applies.

(f) Except as provided in paragraph (g) of this section, the General Counsel shall determine, or designate a person to determine, issues raised by any claim filed under this section. A designation by the General Counsel may specify procedures to be used in resolving the issue or may leave some or all of the procedural matters to the discretion of the designated person. The proceedings pursuant to a designation shall be reported to the General Counsel, who shall approve, modify or disapprove the reported findings and conclusions.

(g) Any person making or objecting to a claim, or other interested person, may at any time file with the General Counsel a request or recommendation as to procedures. The General Counsel may act upon it or refer it to a person designated to resolve the issue.

(h) At any formal or informal hearing the presiding officer may permit any person to assert any claim that could be filed under this section and may determine any issue raised by the claim or, in his discretion, refer it to the General Counsel for resolution pursuant to paragraph (f) of this section.

(i) The filing of any claim under this section, other than a claim of document protection under paragraph (d) of this section, shall stay the time for meeting any information required to which the claim relates, but shall not stay the periods for processing and review of an application unless the Secretary determines that compliance with the requirement is material to processing of the application within the time prescribed in the Act. If the Secretary determines that it is material, he may suspend the application pending a determination that processing can be resumed. The period of any suspension shall not be counted in determining the date prescribed by the time limit set forth in section 4(c)(6), 5(d)(3), 5(e)(2), 5(g), 7(b)(11) or 9(b)(1) of the Act.

(j) Any determination by the General Counsel under paragraph (f) of this section may be appealed to the Secretary for good cause shown.

INFORMAL PUBLIC HEARING

§ 148.231 Notice of public hearing.

After all applications in a proceeding are docketed, the Commandant issues a notice of public hearing and mails or delivers it to any person who requests it and to each applicant and adjacent coastal state. The clerk dockets the notice when it is published. Each notice shows the time and place for the hearings, formulates the factual issues in the proceeding, procedural matters to govern the hearings, and designates the presiding officer assigned by the Commandant for the hearing.

§ 148.233 Testimony and argument.

Interested persons may attend any public hearing, present relevant material at the hearing, and submit briefs and oral argument at a time determined by the presiding officer during the hearing.

§ 148.235 Report of public hearing.

As soon as practicable after a public hearing is completed, the presiding officer forwards a report of the hearing to the clerk for docketing. The report at a minimum contains a summary of the materials presented and factual issues raised at the hearing and has attached to it a transcript of the hearing and all relevant materials and briefs submitted to the presiding officer. The presiding officer determines and announces to the participants during the course of the hearing what material will be attached to the report.

FORMAL HEARING

§ 148.251 Determination to hold formal hearing: notice of formal hearing.

(a) After the reports of public hearings are docketed in a proceeding, the Commandant determines whether there are specific and material factual issues concerning the applications that may be resolved by a formal hearing. If he determines that a formal hearing is necessary, he issues notice of formal hearing to the applicants, the application staff, and the administrative law judge.

(b) A notice of formal hearing lists the factual issues for resolution at the hearing, the applicants, and the administrative law judge assigned to conduct the hearing.

(c) The clerk mails or delivers a copy of the notice of formal hearing in a proceeding to each adjacent coastal state and to each person who requests notice of formal hearing.

§ 148.253 Assignment of administrative law judge: disqualification.

(a) The Commandant assigns the administrative law judge for a formal hearing.

(b) The administrative law judge may disqualify himself at any time after assignment by filing notice of withdrawal from the proceeding. If on motion of a party the administrative law judge does not disqualify himself, the party may appeal the ruling to the Commandant by filing notice of appeal within seven days after the ruling on the motion. A brief may be filed with the notice of appeal.

(c) If the assigned administrative law judge becomes unavailable during the proceeding, another administrative law judge is assigned.

§ 148.255 Jurisdiction of the administrative law judge.

(a) The jurisdiction of the administrative law judge over a proceeding begins when he is assigned. His jurisdiction ends 20 days after the transcript of the formal hearing is docketed or when he issues notice of withdrawal from the proceeding.

(b) The Commandant exercises the authority of an administrative law judge in a proceeding when no administrative law judge has jurisdiction.

§ 148.257 Authority of the administrative law judge.

The administrative law judge assigned to a formal hearing may:

(a) Administer oaths and affirmations;

(b) Issue subpoenas;

(c) Adopt procedures for the submission of evidence in written form;

(d) Rule on offers of proof and receive relevant evidence;

(e) Examine witnesses at the formal hearing;

(f) Dispose of procedural requests or similar matters;

(g) Convene, recess, reconvene, adjourn, and otherwise regulate the course of the formal hearing;

(h) Certify questions to the Commandant;

(i) If a party to a formal hearing fails to appear at a session of the hearing, proceed with the session without further notice to the party;

(j) Extend or shorten a time prescribed by this subpart to the extent consistent with the 240 days time limit prescribed in section 5(g) of the Act for completing public hearings in a proceeding;

(k) Prescribe a time for doing an act if the time is not prescribed in this subpart; and

(l) Take any other action authorized by or consistent with this subpart, the Act, or 5 U.S.C. 551–559.

§ 148.259 Ex parte communications.

If two or more applications have been filed in a proceeding, or if a person opposing an application has intervened in the proceeding, the administrative law judge may not consult any party on a fact in issue except on notice and opportunity for all parties to participate. The administrative law judge must prepare a summary of and have docketed each ex parte communication in the proceeding.

§ 148.261 Parties.

The parties to a formal hearing are the application staff, the applicants, and intervenors in the proceeding.

§ 148.263 Intervention.

(a) Any person may file a petition to intervene in a formal hearing, and any adjacent coastal state may intervene by filing a notice of intervention. The petition must be addressed to the administrative law judge, must identify the specific matters in the hearing on which he seeks to intervene and his interest in those matters, and must designate the name and address of a person upon whom service may be made if the petition is granted. A party to the formal hearing may file an answer to a petition within five days after the petition is filed.

(b) A petition to intervene must be filed within ten days after notice of formal hearing is issued.

(c) Intervention may be limited to particular matters or to particular times in the hearing if necessary to prevent repetitious evidence and argument or to control the course of the formal hearing.

(d) If the administrative law judge denies a petition in whole or part, the petitioner may appeal to the Commandant by filing notice of appeal within seven days after the denial is issued. A brief may be filed with the notice of appeal. A party may file a brief in support of or in opposition to the appeal within seven days after the notice of appeal is filed.

§ 148.265 A person not a party.

(a) At any time before a formal hearing, any person who is not a party may submit to the administrative law judge a petition to present evidence at the formal hearing. The petition must be sent to the administrative law judge or to the clerk who will forward it to the administrative law judge. The petition must contain a statement describing in detail the evidence to be presented and must show its relevancy to factual

issues listed in the notice of formal hearing.

(b) If a petition is granted, the ruling delineates the evidence that may be presented at the formal hearing.

§148.267 Appearance and practice.

(a) Each party to a formal hearing, except an individual, must appear by his attorney. Each attorney must file a notice of appearance that states his name, address, telephone number, and the name of the person he represents. With his notice of appearance, each attorney must file a written authorization from his client.

(b) Each attorney representing a person in a proceeding must be admitted, and be in good standing, to practice before a court of the United States or the highest court of any State, territory or possession of the United States.

(c) The administrative law judge assigned to the formal hearing may suspend or bar an attorney from representing a person in the proceeding if he finds that the attorney has failed to conform to the standards of conduct required for attorneys in the Courts of the United States.

(d) The administrative law judge may exclude any person from a formal hearing or a conference if the person is contumacious at the hearing or conference.

§148.269 Requirements for documents.

(a) Each document, except an application, filed in a proceeding or submitted to the administrative law judge must:

(1) List the docket number of the proceeding; and

(2) Be signed in ink by the person filing or submitting the document and show the capacity of the person signing, his address, and the date of signing.

(b) Each document filed in a proceeding, except an application, must:

(1) Be accompanied by ten copies of the document;

(2) Show the name and address of each person upon whom a copy of the document has been served;

(3) Be accompanied by an affidavit showing proof of service if the person serving the process is not an attorney; and

(4) Contain the following certificate of service if the person serving the process is an attorney:

I hereby certify that I have this day served the foregoing document upon _____ in accordance with 33 CFR 148.275.

Dated at _____ this _____ day of _____, 19——.

Signature

For _____

Name of Party or Petitioner

§148.271 Subscription.

The signature on a document filed, served, or submitted to the administrative law judge in a proceeding is certification by the person signing that he has full authority to sign the document, that he has read it and knows its contents, that to the best of his knowledge, information, and belief the statements made in it are true, and that it is not interposed for delay.

§148.273 Filing.

(a) A document is filed in a proceeding when it meets the requirements in §148.269 and is deposited in the mail or, if not mailed, is received by the clerk.

(b) If the clerk receives a document that does not comply with §148.269 he returns it to the person who submitted it with a statement of reasons for the return.

(c) Filing by mail must be by certified mail.

§148.275 Service of document: other transmittal.

(a) The clerk serves each order, ruling, decision, and notice upon all parties to a formal hearing when issued, except a document issued at the formal hearing or a prehearing conference.

(b) Each document before it is filed in a proceeding must be served upon:

(1) All parties, except the person filing the document; and

(2) The administrative law judge or if no administrative law judge has jurisdiction, the Commandant.

(c) Service of a document upon a party must be made upon the attorney representing the party or, for a party not represented by an attorney, upon the party.

(d) Service must be made by handing a copy of the document to the person to be served or depositing a copy of the document in the mail.

(e) This section does not apply to service of subpoenas. Rules for serving subpoenas are in § 148.281.

(f) The clerk mails to a person who is not a party, and who has submitted a petition or motion in the proceeding, a copy of the ruling on the petition or motion when issued and a copy of the action taken on any appeal of the petition. He mails a copy of the notice of the formal hearing, when the notice is issued, to each person whose petition to present evidence has been granted under § 148.265.

(g) The clerk provides the applicants and the administrative law judge with a copy of each application and report of public hearing docketed in the proceeding.

§ 148.277 Conferences.

(a) The administrative law judge may hold one or more prehearing conferences to give the parties an opportunity to present and consider facts and arguments, to exchange exhibits proposed to be offered in evidence, and to obtain stipulations, admissions, and agreements to produce documents and other tangible things. The administrative law judge may consider at a conference the procedure to be followed at the formal hearing, limitations on the number of witnesses at the hearing, and any other matters that may expedite the disposition of the proceeding.

(b) The administrative law judge may hold conferences during a formal hearing to expedite the disposition of the proceeding.

(c) If a prehearing conference is held, the administrative law judge issues a notice reciting the action taken at the conference and any agreements made between the parties.

§ 148.279 Motions.

(a) Any request for a ruling or relief in a proceeding, except a request for a subpoena or a petition to intervene or present evidence at a formal hearing, must be submitted by motion. Each motion must be addressed to the administrative law judge, state the ruling or relief sought and the grounds therefor, and be accompanied, if appropriate, by a proposed order. Each written motion must be filed. An oral motion may be made only at the formal hearing or a conference.

(b) Within seven days after service of a written motion, a party may file an answer supporting or opposing the motion.

(c) Unless otherwise authorized by the administrative law judge, no oral argument is heard on a written motion. A brief may be filed with a written motion or an answer to a written motion.

(d) The administrative law judge issues a ruling and any appropriate order for each motion made.

(e) Except as otherwise provided in §§ 148.253 and 148.263, a ruling of the administrative law judge on a motion may not be appealed to the Commandant. The administrative law judge may refer any ruling to the Commandant for review if he determines that the ruling involves an important question of law or policy.

§ 148.281 Subpoenas.

(a) At any time before a formal hearing is completed, a party may submit a request to the administrative law judge for issuance of a subpoena. A request for issuance of a subpoena must show the general relevance and scope of the evidence sought.

(b) A proposed subpoena and fifteen copies, and witness fees for one day and mileage, must be submitted with each request. A proposed subpoena must contain:

(1) The docket number of the proceeding;

(2) The captions ''Department of Transportation,'' ''Coast Guard,'' and ''Licensing of Deepwater Port for coastal waters off (*insert name of the coastal state closest to the proposed deepwater port and the docket number of the proceeding*)'';

(3) The name and office of the administrative law judge;

(4) A statement commanding the person to whom the subpoena is directed to attend the formal hearing and give testimony or, for a subpoena to produce documentary evidence, a statement commanding the person to produce designated documents, books,

papers, or other tangible things at a designated time or place; and

(5) Explanation of the procedure in §148.279 and paragraph (e) of this section for quashing a subpoena.

(c) Unless otherwise authorized by the administrative law judge, a subpoena must be served in accordance with Rule 45 of the Federal Rules of Civil Procedure.

(d) A subpoenaed witness is paid the same fees and mileage paid to witnesses subpoenaed in District Courts of the United States. The person requesting a subpoena must pay the fees and mileage.

(e) Any motion to quash a subpoena must be submitted within seven days after service of the subpoena.

(f) If a person does not comply with a subpoena and the administrative law judge on motion rules that good cause has been shown for seeking judicial enforcement of a subpoena, he refers his ruling to the Commandant.

§148.283 Hearing date.

(a) The administrative law judge schedules the formal hearing by issuing a notice to the parties.

(b) The clerk mails or delivers a copy of the notice to any person who requests it.

§148.285 Reporter: transcript; corrections.

(a) The reporter for a formal hearing is arranged for by the clerk. The reporter prepares a verbatim transcript of the hearing under the supervision of the administrative law judge. Nothing may be deleted from the transcript unless ordered by the administrative law judge and noted in the transcript.

(b) After a formal hearing is completed, the administrative law judge certifies and forwards the transcript to the clerk for docketing.

(c) At any time within 20 days after the transcript is docketed, the administrative law judge may make corrections to the certified transcript. Corrections when filed are attached to the transcript as appendices. Any motion to correct the transcript must be submitted within ten days after the transcript is docketed.

§148.287 Order of procedure.

The administrative law judge determines the order of procedure for each formal hearing.

§148.289 Evidence.

A party may present evidence and conduct cross-examination of witnesses at a formal hearing. Other persons may present evidence that they have been authorized to present under §148.265.

§148.291 Rulings referred or appealed to the Commandant.

(a) The Commandant reviews each ruling referred or appealed to him under this subpart and issues a ruling and any appropriate order. Unless otherwise ordered by the Commandant or the administrative law judge, review of a ruling does not stay a formal hearing or extend a time period prescribed by this subpart.

(b) If the administrative law judge refers a ruling to the Commandant, he gives notice to the parties of the referral.

APPLICATION APPROVAL OR DENIAL

§148.321 Decision process generally.

(a) During the 45-day period immediately following the completion of the final public hearing on a proposed deepwater port license for a designated application area, opportunity is provided for the various Federal departments and agencies having expertise concerning, or jurisdiction over, any aspect of ownership, construction, or operation of deepwater ports or having a duty under the Act with respect thereto and the Governor of each adjacent coastal State to formulate and transmit to the Secretary their determinations, recommendations, opinions and approvals or disapprovals, as the case may be.

(b) Within 45 days after the expiration of the 45-day period described in paragraph (a) of this section, the Secretary approves or denies each application for a deepwater port license in the designated application area.

§148.323 Criteria and considerations.

(a) The Secretary approves an application only after he determines that:

(1) The applicant is financially responsible and will carry insurance or give evidence of other financial responsibility in the amount of $50,000,000 to cover the clean-up costs and damages that could result from a discharge of oil from the deepwater port concerned or from a vessel moored at the deepwater port;

(2) The applicant can and will comply with applicable laws, regulations, and license conditions;

(3) The construction and operation of the deepwater port will be in the national interest and consistent with national security and other national policy goals and objectives, including energy sufficiency and environmental quality;

(4) The deepwater port will not unreasonably interfere with international navigation or other reasonable uses of the high seas, as defined by treaty, convention, or customary international law;

(5) In accordance with the environmental review criteria set forth in Appendix A to this part, that the applicant has demonstrated that the deepwater port will be constructed and operated using the best available technology, so as to prevent or minimize adverse impact on the marine environment; and

(6) The adjacent coastal State to which the deepwater port concerned is to be connected by pipeline, has developed, or is making, at the time the application was submitted, reasonable progress toward developing an approved coastal zone management program pursuant to the Coastal Zone Management Act of 1972 in the area to be directly and primarily impacted by land and water development in the coastal zone resulting from the deepwater port or is receiving a planning grant under section 305 of the Coastal Zone Management Act.

(b) In deciding whether to approve or deny an application and in making the related preliminary determinations specified in paragraph (a) of this section, the Secretary considers:

(1) The information set forth in the application concerned and any other applications for licenses for the same application area submitted in accordance with section 5(d)(3) of the Act;

(2) The information developed during hearings held pursuant to §§ 148.231 through 148.291;

(3) The final environmental impact statement for the application area concerned;

(4) The views of the Secretary of the Army, the Secretary of State, and the Secretary of Defense on the adequacy of the application and its effects on programs within their respective jurisdictions;

(5) The views and recommendations of the heads of any other Federal departments or agencies having expertise concerning, or jurisdiction over, any aspect of the ownership, construction or operation of deepwater ports; and

(6) The opinions of the Federal Trade Commission and the Attorney General as to whether issuance of the license would adversely affect competition, restrain trade, promote monopolization or otherwise create a situation in contravention of the antitrust laws.

(c) The Secretary does not approve an application if, within the 45-day period immediately following the completion of the final public hearing:

(1) The Administrator of the Environmental Protection Agency determines that the proposed deepwater port will not conform with all applicable provisions of the Clean Air Act, as amended, the Federal Water Pollution Control Act, as amended, or the Marine Protection, Research and Sanctuaries Act, as amended; or

(2) The Governor of an adjacent coastal State disapproves the issuance of the license.

§ 148.325 Multiple applications.

(a) Except as provided in paragraph (b) of this section, in the case of more than one application for a deepwater port license in a designated application area, only one application may be approved according to the following order of priorities:

(1) An applicant that is an adjacent coastal State (or combination of States), any political subdivision thereof or agency or instrumentality, including a wholly owned corporation thereof.

(2) An applicant who is not:

(i) Engaged in producing, refining, or marketing oil;

(ii) An affiliate of any person who is engaged in producing, refining or marketing oil; or

(iii) An affiliate of such an affiliate.

(3) Any other applicant.

(b) Notwithstanding the order of priorities listed in paragraph (a) of this section, if the Secretary determines that one of the proposed deepwater ports will clearly best serve the national interest, he may approve the application for that port. In making this determination, the Secretary considers:

(1) The degree to which the proposed deepwater ports affect the environment as determined under the review criteria set forth in Appendix A to this part;

(2) Any significant differences between anticipated completion dates for the proposed deepwater ports; and

(3) Any differences in costs of construction and operation of the proposed deepwater ports to the extent that such differential may significantly affect the ultimate cost of oil to the consumer.

§ 148.327 Termination of proceeding before approval or denial of an application.

The Commandant terminates a proceeding if:

(a) All applications are withdrawn before the decision approving or denying them is issued; or

(b) In a proceeding with one application that does not have all of the information required by Subpart B of this part, the applicant after inquiry by the application staff does not provide adequate assurance that further information to make the application is forthcoming.

Subpart D—Issuance of a License

§ 148.400 Applicability.

This subpart prescribes rules that apply to the issuance of a license under the Act.

§ 148.403 Issuance of a license.

If an application under the Act is approved, a license is issued containing the following:

(a) The name and number or identification of the port.

(b) The name of the owner and operator of the port.

(c) Conditions to the ownership, construction, and operation of the deepwater port issued under section 4(e) of the Act.

§ 148.405 Term of license.

Each license is issued for a term of 20 years, unless a shorter period is requested in the application.

§ 148.407 Consultation with adjacent coastal States.

(a) The Governor of an adjacent coastal State may consult with the application staff concerning license conditions that the application staff may have under consideration.

(b) If the Governor of an adjacent coastal State notifies the Secretary that an application, which would otherwise be approved in a proceeding, is inconsistent with State programs relating to environmental protection, land and water use, or coastal zone management, the notification should include a description of:

(1) The State's environmental protection, land or water use, or coastal zone management program with which the application is inconsistent and how the application is inconsistent; and

(2) Conditions that if imposed on the license would make it consistent with the State program.

Subpart E—Site Evaluation

SOURCE: CGD 75–194, 41 FR 16800, Apr. 22, 1976, unless otherwise noted.

§ 148.501 Purpose.

(a) This subpart prescribes requirements for site evaluation and preconstruction testing at potential deepwater port locations.

(b) For the purpose of this subpart, ''site evaluation and preconstruction testing'' means all field studies performed at potential deepwater port locations, including:

(1) Preliminary studies to determine site feasibility;

(2) Detailed studies of the topographic and geologic structure of the ocean bottom to determine its ability to support offshore structures and appurtenances; and

(3) Studies involved with the preparation of the environmental analysis required under § 148.109(t).

§ 148.503 Notice of proposed site evaluation activities.

(a) Any person desiring to conduct site evaluation and preconstruction testing at potential deepwater port sites must submit a written notice to the Commandant (G–M), U.S. Coast Guard, Washington, DC 20593, at least 10 days before the commencement of any activities.

(b) The written notice of proposed site evaluations and preconstruction testing at potential deepwater port locations must include the following:

(1) The identification of persons or agencies participating in the proposed activities.

(2) The type of activities and the manner in which they will be conducted.

(3) Chartlets showing the location where the proposed activities are to be conducted and locations of all offshore structures, including pipelines and cables, in or near the area of proposed activity.

(4) The specific purpose of the activities.

(5) The dates on which the activities will be commenced and completed.

(6) Available environmental data on the environmental consequences of the activities.

(7) A preliminary report, based on existing data, of the historic and archeological significance of the area where the proposed activities are to take place, including a report of each contact made with any appropriate State liaison officer for historic preservation.

(c) For the activities listed below, because they are not usually harmful to the environment, the notice need contain only the information required in paragraphs (b)(1), (2), and (5) of this section, as well as a general indication of the proposed location and purpose of the activities:

(1) Gravity and magnetometric measurements.

(2) Bottom and sub-bottom acoustic profiling without the use of explosives.

(3) Sediment sampling of a limited nature using either core or grab samplers if geological profiles indicate no discontinuities that may have archeological significance.

(4) Water and biotic sampling, if the sampling does not adversely affect shellfish beds, marine mammals, or an endangered species, or if permitted by another Federal agency.

(5) Meterological measurements, including the setting of instruments.

(6) Hydrographic and oceanographic measurements, including the setting of instruments.

(7) Small diameter core sampling to determine foundation conditions.

(d) The Coast Guard advises and coordinates with appropriate Federal agencies and States concerning activities under this subpart.

(e) If necessary, the Coast Guard requires additional information in individual cases.

[CGD 75–194, 41 FR 16800, Apr. 22, 1976, as amended by CGD 88–052, 53 FR 25121, July 1, 1988]

§ 148.505 General conditions of performance.

(a) No person may conduct activities to which this subpart applies except in compliance with the regulations in this subpart and all other applicable laws and regulations.

(b) A separate written notice is required for each site.

(c) Measures must be taken to prevent or minimize the effect of those activities that may:

(1) Adversely affect the environment;

(2) Interfere with authorized uses of the Outer Continental Shelf or navigable waters; or

(3) Pose a threat to human health and welfare.

§ 148.507 Reports.

Each person conducting site evaluation and preconstruction testing at potential deepwater port locations shall:

(a) Notify the Coast Guard of any evidence of objects of cultural, historical, or archeological significance immediately upon their discovery;

(b) Notify the Coast Guard immediately of any:

(1) Adverse effects on the environment;

(2) Interference with Authorized uses of the Outer Continental Shelf;

(3) Threat to human health and welfare; and

(4) Adverse effects on any site, structure, or object of potential historical or archeological significance; and

(c) Submit a preliminary written report to the Coast Guard within 30 days after the completion of activity that contains, as reasonably available at that time:

(1) A narrative description of the activities performed;

(2) Charts, maps, or plats for the area where the activities were conducted and referencing the narrative description required in paragraph (c)(1) of this section;

(3) The dates on which the activities were performed;

(4) Information on any adverse effects on the environment, other uses of the area where the activities were conducted, human health or welfare, or any site, structure, or object of potential historical or archeological significance;

(5) Data on the historical or archeological significance of the area where the activities were conducted, including the report of an underwater archeologist, if physical data indicate the need for such expertise as related to the activities undertaken; and

(6) Any addtional information that may be required by the Coast Guard; and

(d) Submit to the Coast Guard within 120 days after the completion of activity a final detailed report that contains all the data required in paragraph (c) of this section that was not included in the preliminary report.

§ 148.509 Suspension and prohibition of activities.

(a) The Commandant may order, either in writing or orally with written confirmation, the immediate suspension, for a period not to exceed 30 days, of any site evaluation activity when, in his judgment, such activity threatens immediate, serious, and irreparable harm to human life, biota, property, cultural resources, any valuable mineral deposits, or the environment. During any suspension the Coast Guard will consult with the sponsor of the activity suspended concerning appropriate measures to remove the cause for suspension. A suspension may be rescinded at any time upon presentation of satisfactory assurance by the sponsor that the activity no longer adversely threatens the quality of the human environment.

(b) The Commandant may prohibit those activities that:

(1) Are suspended under paragraph (a) of this section, if the cause for suspension is not or cannot be removed;

(2) Threaten immediate, serious, and irreparable harm to life, including biota, property, cultural resources, any valuable mineral deposits, or the environment;

(3) Violate the requirements of this subpart; or

(4) Are otherwise inconsistent with the purposes of the Act.

Subpart F—Procedure for Exemption From Any Requirement in Deepwater Port Regulations

§ 148.601 Applicability.

This subpart sets forth the procedures governing exemptions from any requirement in this part 148, parts 149 and 150.

§ 148.603 Petition for exemption.

(a) Any person required to comply with any specific requirements in Part 148, Parts 149 and 150 may submit a petition to the Commandant for an exemption.

(b) A petition for exemption must be submitted in writing. It may be in any form, but it must be specific and it must contain all data necessary to evaluate its merits.

§ 148.605 Coordination with states.

A petition for exemption under this subchapter that appears to involve the interests of an adjacent coastal State will be referred to the Governor of that State for consideration and recommendation.

§ 148.607 Exemption criteria.

The Commandant grants an exemption if he determines that:

(a) Compliance with the regulations would be contrary to the public interest;

(b) Compliance would not enhance safety or the environment;

(c) Compliance is not practical because of local conditions or because the materials or personnel needed for compliance are unavailable;

(d) National defense or national economy justify a departure from the rules; or

(e) The alternative proposed in the petition would:

(1) Ensure comparable or greater safety; environmental protection; and quality of construction, maintenance and operation of a deepwater port; and

(2) Would be consistent with recognized principles of international law.

Subpart G—Limits of Liability

SOURCE: CGD 97–023, 62 FR 33363, June 19, 1997, unless otherwise noted.

§ 148.701 Purpose.

This subpart sets forth the limits of liability for U.S. deepwater ports in accordance with section 1004 of the Oil Pollution Act of 1990 (33 U.S.C. 2704).

§ 148.703 Limits of liability.

(a) The limits of liability for U.S. deepwater ports will be established by the Secretary of Transportation on a port-by-port basis, after review of the maximum credible spill and associated costs for which the port would be liable. The limit for a deepwater port will not be less than $50 million or more than $350 million.

(1) The limit of liability for the LOOP deepwater port licensed and operated by Louisiana Offshore Oil Port, Inc., is $62,000,000.

(2) [Reserved]

(b) [Reserved]

APPENDIX A TO PART 148—ENVIRONMENTAL REVIEW CRITERIA FOR DEEPWATER PORTS

I. *Authority*. The Deepwater Port Act of 1974, Pub. L. 93–627 (33 USC 1501 et seq.), authorizes the Secretary of Transportation to issue, transfer, amend, or renew a license for the ownership, construction, and operation of a deepwater port. Section 6 of the Act requires the Secretary to establish environmental review criteria which shall be used to evaluate a deepwater port as proposed in an application for a license. By amendment of Part 1 of Title 49, Code of Federal Regulations (49 CFR 1.46(t)), dated April 25, 1975, the Secretary delegated to the Commandant of the Coast Guard the responsibility to establish such criteria (40 FR 20088–20089). (49 CFR 1.46(t) is presently redesignated as 49 CFR 1.46(s) (40 FR 43901–43906)).

Section 6 of the Act reads as follows:

Sec. 6. (a) The Secretary, in accordance with the recommendations of the Administrator of the Environmental Protection Agency and the Administrator of the National Oceanic and Atmospheric Administration and after consultation with any other Federal departments and agencies having jurisdiction over any aspect of the construction or operation of a deepwater port, shall establish, as soon as practicable after the date of enactment of this Act, environmental review criteria consistent with the National Environmental Policy Act. Such criteria shall be used to evaluate a deepwater port as proposed in an application, including:

(1) the effect on the marine environment;

(2) the effect on oceanographic currents and wave patterns;

(3) the effect on alternate uses of the oceans and navigable waters, such as scientific study, fishing, and exploitation of other living and nonliving resources;

(4) the potential dangers to a deepwater port from waves, winds, weather, and geological conditions, and the steps which can be taken to protect against or minimize such dangers;

(5) effects of land-based developments related to deepwater port development;

(6) the effect on human health and welfare; and

(7) such other considerations as the Secretary deems necessary or appropriate.

(b) The Secretary shall periodically review and, whenever necessary, revise in the same manner as originally developed, criteria established pursuant to subsection (a) of this section.

(c) Criteria established pursuant to this section shall be developed concurrently with the regulations in section 5(a) of this Act and in accordance with the provisions of that subsection.

II. *Purpose.* A. Environmental review criteria shall be used to evaluate a deepwater port as proposed in an application for a license to own, construct and operate a deepwater port. The criteria shall be consistent with the National Environmental Policy Act, Pub. L. 91–190 (42 USC 4321 et seq.), which declares a national environmental policy. The Secretary of Transportation may issue a license in accordance with the provisions of the Act if, among other things, he determines:

—that the construction and operation of the deepwater port will be in the national interest and consistent with national security

and other national policy goals and objectives, including energy sufficiency and environmental quality; and

—in accordance with the environmental review criteria established pursuant to section 6 of the Act, that the applicant has demonstrated that the deepwater port will be constructed and operated using the best available technology to prevent or minimize adverse impact on the environment. (Sections 4(c)(3) & (5) of the Act.)

These criteria are therefore intended to be used to evaluate the environmental soundness of a proposed deepwater port and to serve as basic guidelines for determining what environmental impacts could result from deepwater port development and the procedures and technology which can be used to prevent or minimize adverse impacts.

B. In accordance with section 5(f) of the Act, these criteria shall also be considered in the preparation of a single, detailed environmental impact statement for all timely applications covering a single application area. Additionally, section 5(i)(3) of the Act specifies that, in the event more than one application is submitted for an application area, the criteria shall be used, among other factors, in determining whether any one proposed deepwater port clearly best serves the national interest.

III. *Environmental review criteria.* The environmental review of a proposed deepwater port consists of two parts. The *first* part involves assessment of the probable negative and positive environmental impacts which will result from construction and operation of the port. The *second* part appriases the effort made by the applicant to prevent or minimize adverse environmental effects. Guidelines for such an effort are set forth and will be closely considered in the review.

The overall intent of this review is to arrive at a comprehensive evaluation of the significance of the discrete and cumulative environmental impacts, adverse and beneficial, of the project as proposed and to determine whether or not the applicant has demonstrated that the deepwater port will be constructed and operated using the best available technology, so as to prevent or minimize adverse impact on the marine environment.

A. The proposed deepwater port will be evaluated to assess the magnitude and importance of its probable negative and positive environmental impacts. This review will include comparison with reasonable alternative actions, such as: the no-action case (alternative transportation schemes for imported oil); alternative sites, designs, and systems; and other deepwater ports. The information necessary for such an evaluation will be provided by the Federal Environmental Impact Statement and other sources as necessary. A picture of the relative net environmental impact of the proposed project should be obtained. Also, identification of actions which might be taken with respect to procedures and technology to prevent or minimize probable adverse effects will be made. The following are the primary areas of concern:

1. *The Effect on the Marine Environment:*

(NOTE: The term ''marine environment'' includes the navigable waters (including the lands therein and thereunder) and the adjacent shorelines (including the waters therein and thereunder); transitional and intertidal areas, bays, lagoons, salt marshes, estuaries, beaches, waters of the contiguous zone, waters of the high seas; the fish, wildlife and other living resources thereof; and the recreational and scenic values of such lands, waters and resources.)

a. The potential effects of surface and bottom disturbances and increased turbidity both directly on ecological habitats and on the life stages of biological populations and indirectly on such habitats and populations through modifications of the physical, geological, and/or chemical environment.

b. The potential effects of pollutants, especially oil, on ecological habitats and the life stages of biota.

c. The potential effects on threatened or endangered species and on ecosystems.

2. *The Effect on Oceanographic Currents and Wave Patterns:*

a. The potential primary effects of construction and operation on,

i. surface, midwater and bottom currents,

ii. waves,

iii. tides and tidal currents, especially in constricted coastal areas and estuaries,

iv. ice;

b. The potential secondary impacts of changes to current and wave patterns on sand and sediment transport, turbidity, beach processes, salinity and sedimentation rates resulting from changes to current, wave and tide patterns; and, the resulting impacts on biological systems, on shorelines and beaches, and on their alternate uses.

3. *The Effects on Alternate Uses of the Oceans and Navigable Waters:*

a. Scientific study;

b. Fishing (commercial and recreational);

c. Exploitation of other living and non-living resources;

d. Sanctuary maintenance;

e. Recreation;

f. Approved costal zone management plans;

g. Power generation;

h. Transportation;

i. Other commercial, industrial or public uses and the national defense.

4. *The Potential Environmental Dangers to a Deepwater Port;*

a. From waves, winds, weather, and geological conditions;

b. The steps which can be taken to minimize such dangers with respect to,

i. siting,

ii. design,
iii. construction,
iv. operations and procedures.

5. *The Effects of Land-Based Developments Related to Deepwater Port Development on:*

a. Stream and river flow, ground and surface water quality and supplies;
b. Marine water quality;
c. Air quality;
d. Alternate land and water uses,
i. wetlands,
ii. habitats,
iii. nurseries,
iv. recreation,
v. wilderness, preserves, and wild and scenic rivers,
vi. existing and proposed sanctuaries,
vii. historical and cultural areas,
viii. open and green space,
ix. agricultural and grazing,
x. residential and commercial,
xi. industrial,
xii. transportation,
xiii. power generation and transmission,
xiv. others.

6. *The Effect on Human Health and Welfare:*

a. Health:

i. the physiological effects of reduced or altered air and water quality or supply, of altered or increased noise levels or quality, of altered community density, etc., and the psychological effects of the above;

ii. the risk of human safety and life posed by a proposed project.

b. Welfare—the ultimate effects of dynamic economic and social change inflicted directly or induced upon the relevant communities, including but not limited to the projected changes in employment, population density, housing and public services, and tax base.

B. In this second part, the proposed project will be appraised for the effort made to prevent or minimize the probable adverse impacts on the environment. This appraisal is primarily concerned with the project as proposed and alternatives are relevant only insofar as they may represent a spectrum of possible actions against which the proposal will be judged. Areas of concern are: siting, design, construction, and operation; and, land use and coastal zone management. Specifically, the review will consider the degree of adherence to the following guidelines.

1. *Siting*— A proposed deepwater port should be sited in an optimum location in order to prevent or minimize possibly detrimental environmental effects. For example:

a. The deepwater port and all its components, including receiving terminals, inline transportation facilities and stations, ancillary and service facilities, and pipeline, should occupy the minimum space necessary for safe and efficient operation and should be located, as much as possible, in areas in which permanent alteration of wetlands is not necessary. Buffer zones should be provided to separate onshore facilities from incompatible adjacent land uses.

b. The deepwater port facility and its offshore components should be located in areas which have stable sea-bottom characteristics and, its onshore components should be located in areas in which a stable foundation can be developed and flood protection levees, if appropriate, can be constructed.

c. The deepwater port facility should be located in an area where existing offshore structures and activities will not interfere with its safe operation, and where the facility or navigation to and from that facility, will not interfere with the safe operation of existing offshore structures. Water depths and currents in and around the deepwater port and its approaches should pose no undue hazard to safe navigation. Extensive dredging or removal of natural obstacles such as reefs, should be avoided. The siting procedure should select an area where projected weather, wave conditions, and seismic activity minimize the probability that damage will occur to the deepwater port, tankers, pipeline, and component shoreside facilities from storms, earthquakes, or other natural hazards.

d. Selection of sites should maximize the permitted use of existing work areas, facilities and access routes for construction and operations activities. Where temporary work areas, facilities, or access routes must be used, they should be to the fullest extent possible, designed and constructed in such a manner to permit restoration to the preconstruction environmental conditions or better.

e. The deepwater port facility, navigational fairway(s) and pipelines should be sited where the interactions of facilities' requirements and natural environment are optimized to prevent adverse impacts or to produce minimal, acceptably low adverse effects. Key factors in assessments should include (but not necessarily be limited to) projected winds, waves, current, spill size and frequency, cleanup capability, shoreline/estuarine/bay sensitivity; biological resources, damage potential and recovery rate; facility design; and project economics.

f. The deepwater port, pipeline, and attendant facilities should be located as far as practicable from the vicinity of critical habitats for biota, including but not limited to commercial and sports fisheries and threatened and endangered species.

g. Sites should reflect negligible displacement of existing or potentially important uses such as the following:

i. fisheries,
ii. recreation,
iii. mining,
iv. oil and gas production,
v. transportation.

h. Siting should favor areas already allocated for similar use and the implications of density of such uses.

i. port facilities—existing tanker and barge traffic—existing ports which can be used for service vessels.

ii. pipelines—use of existing corridors.

iii. secondary facilities—use of (or expansion of) existing storage, refinery, and other support facilities.

iv. construction facilities—use of existing equipment and personnel staging yards.

i. The deepwater port, pipelines and other offshore facilities should be sited so as to not permanently interfere with the natural littoral process or to alter significantly any tidal pass or other part of the physical environment important to natural currents and wave patterns.

j. Pipelines, or other deepwater port components or facilities requiring dredging, should not be located where sediments with high levels of heavy metals, biocides, oil, or other pollutants or hazardous materials exist.

2. *Design, Construction and Operation*— Selection of design and procedures for construction and operation of a deepwater port must reflect use of best available technology. For example:

a. All oil transfer, transportation, and storage facilities, systems and equipment should include appropriate safeguards and backup systems and/or be operated under procedures to minimize both the possibility of pollution incidents resulting from personnel and equipment failures, natural calamities and casualties, such as tanker collisions or groundings, and the adverse effects of those pollution incidents which occur. These facilities, systems, and equipment, should be designed to permit safe operation, including appropriate safety margins, under maximum operating loads and the most adverse operating conditions to which each may be subjected.

b. All facilities should be provided with a safe, environmentally sound method for the collection, storage, and disposal of solid and liquid wastes generated by such facilities. When prescribed by law or regulation, the deepwater port may be required to be fitted with additional facilities for the collection and treatment of ship-generated liquid and solid wastes, such as oily bilge and oily ballast water, tank cleaning residues, sludge wastes, and sewage and garbage.

c. The proposed project should be designed, constructed and operated so as not to interfere permanently with natural littoral processes or other significant aspects of currents and wave patterns. Additionally, harmful erosion or accretion, both onshore and offshore, should be prevented. Groundwater drawdown or saltwater intrusion should not be permitted. Moreover, mixing of salt, brackish, and fresh waters should be minimized. Designs should not include factors which will disrupt natural sheetflow, water flow, and drainage patterns or systems.

d. The proposed project should not interfere with biotic populations. Potential effects on breeding habitats or migration routes should receive particular attention.

e. The proposed project should be designed, constructed and operated so as to make maximum feasible use of already existing local facilities such as roads, pipelines, docking facilities and communications facilities.

f. Disposal of spoil and refuse material should be effected only at disposal sites specifically selected and approved by competent authorities. Whenever and wherever possible, the proposal should provide for resource recovery, reclamation of affected areas, or enhancing uses of spoil and waste.

g. Personnel trained in oil spill prevention should be present at critical points at the deepwater port (as identified in the accident analysis). Personnel should also be trained in oil spill control to mitigate the effects of any spill which may occur.

3. *Land Use and Coastal Zone Management*— A deepwater port should not conflict with existing or planned land use including management of the coastal region. A measure of whether or not conflict exists will be made by the following means:

a. The proposed project should adhere closely to approved master plans or other plans of competent local or State authorities in designated adjacent coastal States or in other States where significant effects are likely to occur. A minimum of special exceptions or zoning variances should be required. Non-conforming uses should not be prolonged where reasonable alternatives are available.

b. The proposed project should conform with approved or planned coastal zone management programs of the relevant adjacent coastal States.

c. The proposed use of floodplains should not entail loss of wetlands nor should such use pose an undue risk of exposure of that use to flood damage, increase the potential need for Federal expenditures for flood protection or flood disaster relief, decrease the unique public value of the floodplain as an environmental resource, or provide an incentive for other uses of the floodplains having similar ultimate results.

(d) The use of or effect on wetlands should be considered in the following manner,

i. uses permanently altering or adversely affecting wetlands are to be avoided, or

ii. positive action must be taken to minimize adverse effects on wetlands.

ANNEX A

1. The following environmental criteria are expressly referred to in the Deepwater Port Act of 1974:

a. Compliance with the Clean Air Act (4(c)(6)).

b. Compliance with the Federal Water Pollution Control Act (4(c)(6)).

c. Compliance with the Marine Protection, Research and Sanctuaries Act (4(c)(6)).

d. Effect on the marine environment (6(a)(1)).

e. Effect on oceanographic currents and wave patterns (6(a)(2)).

f. Effect on alternate uses of the oceans and navigable water, such as scientific study, fishing, and exploitation of other living and nonliving resources (6(a)(3)).

g. The potential dangers to a deepwater port from waves, wind, weather and geological conditions, and the steps which can be taken to protect against or minimize such dangers (6(a)(4)).

h. Effects of land-based developments related to deepwater port development (6(a)(5)).

i. Effect on human health and welfare (6(a)(6)).

j. Consistency with adjacent coastal States' programs relating to environmental protection, land and water use, and coastal zone management (9(b)).

k. Development of an approved coastal zone management program pursuant to the Coastal Zone Management Act of 1972 in the area to be directly and primarily impacted by deepwater port land and water development in the coastal zone of that State directly connected by pipeline to the proposed deepwater port (9(c)).

l. Pursuant to section 102(c)(2) of the National Environmental Policy Act, prepare a single, detailed environmental impact statement for each application area (5(f)).

[CGD 75–002, 40 FR 52553, Nov. 10, 1975; 40 FR 58143, Dec. 15, 1975]

PART 149—DESIGN, CONSTRUCTION, AND EQUIPMENT

Subpart A—General

Sec.
149.101 Purpose.
149.105 Licensee.

Subpart B—Design and Equipment; General

149.201 Applicability.
149.203 Engineering drawings and specifications.
149.205 Design standards.
149.206 Construction.
149.209 SPM's.
149.211 Emergency equipment.
149.213 Helicopter fueling facilities.
149.215 Interference with helicopter operations.
149.217 First aid station.

Subpart C—Pollution Prevention Equipment

149.301 Applicability.
149.303 Overflow and relief valve.
149.305 Pipeline end manifold (PLEM) shutoff valve.
149.307 Blank flange and shutoff valve.
149.309 Manually operated shutoff valve.
149.311 Malfunction detection system.
149.313 Oil transfer system alarm.
149.315 Marking of oil transfer system alarm.
149.317 Communications equipment.
149.319 Discharge containment and removal material, and equipment.
149.321 Special requirement for onloading ports.

Subpart D—Safety Equipment

149.401 Applicability.
149.402 Equipment not required on a PPC.

CURBS, GUTTERS, DRAINS, AND RESERVOIRS

149.403 Curbs, gutters, drains, and reservoirs.

EMERGENCY POWER

149.411 Emergency power.

MEANS OF ESCAPE

149.421 Means of escape from platform.
149.423 Means of escape from helicopter landing pad.

PERSONNEL LANDINGS

149.431 Personnel landings.
149.433 Personnel landing illumination.

GUARDRAILS, FENCES, NETS, AND TOEBOARDS

149.441 Open sided deck, deck opening, catwalk, and helicopter pad protection.

FIXED FIRE MAIN SYSTEM FOR WATER

149.451 Fixed fire main system for water.
149.453 Fire pumps.
149.455 Fire pump location.
149.457 Fire hydrants.
149.459 Fire hydrant outlet.
149.461 Fire hydrant and control valve shutoff valve.
149.463 Fire hydrant access.
149.465 Spanner.
149.467 Fire hose rack.
149.469 Fire hose size.
149.471 Fire hose coupling.
149.473 Fire hose nozzle.
149.477 Spray applicator.
149.479 International shore connection.

OTHER FIRE EXTINGUISHING SYSTEMS

149.481 Other fire extinguishing systems.
149.483 Fire fighting system for helicopter pads.

FIRE DETECTION AND ALARM SYSTEMS

149.491 Fire detection and alarm systems.

PORTABLE AND SEMIPORTABLE FIRE FIGHTING EQUIPMENT

149.501 Portable and semiportable fire extinguishers.
149.503 Location of extinguishers.
149.505 Spare charges.
149.507 Marking.
149.511 Landing areas with no fueling facility.
149.513 Landing area with a fueling facility.
149.515 Fire axes.
149.517 Fireman's outfits.

LIFESAVING EQUIPMENT

149.521 Lifeboats and inflatable life rafts: general.
149.522 Lifeboats.
149.523 Inflatable life rafts.
149.524 Launching equipment for lifeboats.
149.525 Launching equipment for inflatable life rafts.
149.526 Approved ring life buoys (Type IV personal flotation devices).
149.527 Portable radio apparatus.
149.529 Type I personal flotation devices (PFD's).
149.533 Litters.
149.535 Markings on lifeboats, life rafts, paddles, and oars.
149.537 Markings for personal flotation devices (PFD's).

MISCELLANEOUS

149.539 Portable lights.
149.541 General alarm system.
149.543 Marking of general alarm system.
149.545 Public address system.

Subpart E—Aids to Navigation at Deepwater Ports

GENERAL

149.701 Applicability.
149.703 Effective intensity: Definition.
149.705 Applicability of other regulations.
149.707 Applications for aids to navigation.

SPECIFICATIONS FOR LIGHTS

149.721 Light source.
149.723 Intensity.
149.724 Focus.
149.725 Color.
149.727 Chromaticity.
149.729 Display of information.

OBSTRUCTION LIGHTS

149.751 Number and location on a platform and SPM.
149.753 Number and location on a floating hose string.
149.755 Characteristics.
149.757 Intensity.
149.759 Leveling.

BUOYS

149.771 Number and location.
149.773 Characteristics.
149.775 Intensity of lights.

MISCELLANEOUS

149.791 Identification of a platform and SPM.
149.793 Markings for piles and pile clusters.
149.795 Radar beacon.
149.797 Rotating lighted beacon.
149.799 Fog signal.

AUTHORITY: 33 U.S.C. 1504; 49 CFR 1.46.

SOURCE: CGD 75–002, 40 FR 52565, Nov. 10, 1975, unless otherwise noted.

Subpart A—General

§ 149.101 Purpose.

This part describes design, construction, and equipment requirements for each deepwater port.

§ 149.105 Licensee.

The licensee of a deepwater port shall ensure that the port meets the design and construction requirements in this part.

Subpart B—Design and Equipment; General

§ 149.201 Applicability.

This subpart prescribes requirements for design and equipment that apply to each deepwater port.

§ 149.203 Enginering drawings and specifications.

(a) The licensee of a deepwater port must submit to the Commandant (G–M) three copies of each construction drawing and specification necessary to show compliance with the requirements of the Act and the regulations in this subchapter, a list of all drawings, and each revision to a construction drawing and specification of each:

(1) Fixed marine component; and

(2) Floating marine component.

(b) Each construction drawing and specification, and each revision required to be submitted by paragraph (a) of this section must bear the seal, or a facsimile imprint of the seal of the

registered professional engineer responsible for the accuracy and adequacy thereof.

(c) The Coast Guard reviews and evaluates construction drawings and specifications to ensure compliance with the Act and Subchapter NN. The licensee of a deepwater port may not begin construction, or installation of prefabricated components, until the applicable drawings and specifications are approved by the Commandant (G–M). The Coast Guard makes periodic inspections at the construction site and at component construction sites to ensure compliance with approved drawings and specifications. As used in this paragraph, the term ''approved'' means that each drawing or specification meets the requirements of the Act and the regulations in this subchapter.

(d) When construction or installation of each component is complete, the licensee of a deepwater port must submit two complete sets of record drawings and specifications on 105 mm negatives to the Commandant (G–M). Each negative must be:

(1) Placed in a separate envelope, and

(2) Identified and indexed.

[CGD 75–002, 40 FR 52565, Nov. 10, 1975, as amended by CGD 88–052, 53 FR 25121, July 1, 1988]

§ 149.205 Design standards.

(a) Each fixed marine and floating component of a deepwater port, except hoses, mooring lines, and aids to navigation buoys, must be designed to withstand at least the combined wind, wave, and current forces of the most severe storm that can be expected to occur in any period of 100 years at the port.

NOTE: ''Recommended Procedure for Developing Deepwater Ports Design Criteria'' describes a method to prepare the wind, wave, and current criteria for use in determining the forces of the storm described by this paragraph. This guide may be obtained from the Commandant (G–M).

(b) Each platform must be designed in accordance with the American Petroleum Institute ''Recommended Practice for Planning, Designing, and Constructing Fixed Offshore Platforms'' (API RP 2A), and the codes and standards in API RP 2A, to the extent that the recommended practice, codes, and standards are consistent with this subchapter.

(c) Each electrical installation on a platform must be designed, to the extent practicable, in accordance with 46 CFR 110–113.

(d) Each boiler and pressure vessel on a platform must be designed in accordance with Sections I, IV, and VIII of the American Society of Mechanical Engineers ''ASME Boiler and Pressure Vessel Code'' to the extent that the code is consistent with this subchapter.

(e) Main oil transfer piping on a platform must be designed in accordance with the American National Standards Institute (ANSI B 31.4) Liquid Petroleum Transportation Piping Systems.

[CGD 75–002, 40 FR 52565, Nov. 10, 1975, as amended by CGD 88–052, 53 FR 25121, July 1, 1988]

§ 149.206 Construction.

(a) The following walls or decks on a platform must meet the requirements in 46 CFR 92.07–5(b) for ''A'' class bulkheads, except that each wall or deck must be made of steel:

(1) Each wall or deck that separates a galley, a paint and lamp locker, a space housing emergency power generating equipment, or a machinery space from any other space.

(2) Each wall or deck of an interior stairway connecting enclosed spaces on three or more decks.

(3) Each wall or deck of an elevator shaft, of a dumbwaiter shaft, and of any other shaft connecting two or more enclosed spaces.

(b) The following walls or decks on a platform must meet the requirements in 46 CFR 92.07–5 (b) or (c) for ''A'' or ''B'' class bulkheads:

(1) Each corridor wall or deck of a personal accommodation space.

(2) Each wall or deck of a stairway that connects two decks or each wall or deck of a structure enclosing an opening to the stairway.

(c) A platform wall or deck that is not described in paragraph (a) or (b) of this section must meet the requirements in 46 CFR 92.07–5 (b), (c), or (d) for ''A'', ''B'', or ''C'' class bulkheads.

(d) Each deck and stairway on a platform must be made of steel and may have a deck covering.

(e) A space that is described in paragraphs (a)(2) or (a)(3) of this section must be enclosed by walls and decks.

(f) Each interior stairway that connects two enclosed spaces on a platform must be enclosed by walls and decks or an opening to the stairway must be enclosed by a structure.

(g) Each interior stairway that connects three or more decks on a platform must have access to each deck.

(h) Each opening in a wall or deck on a platform must have a closure that meets the requirements in this section for the wall or deck. Each door must:

(1) Be a self-closing type;

(2) Not have holdback hooks or other means of permanently holding the door open, except for magnetic holdbacks operated from a suitable remote control position; and

(3) Not have a louver or other opening, except that a door to a sleeping space may have a louver in the lower half of the door.

(i) Internal deck coverings, except those in washrooms and toilet spaces, must be of a type approved under 46 CFR Subpart 164.006. Overlays for leveling or finishing purposes which do not meet the requirements in 46 CFR Subpart 164.006 may be used in thicknesses not exceeding ⅜ of an inch.

(j) Each ceiling, sheathing, furring, and insulation on a platform, must be a noncombustible material of a type that is approved under 46 CFR 164.009.

(k) The interior finish on each wall and ceiling in a corridor or hidden space on a platform must be a type that is approved under 46 CFR 164.012. Walls within a room may have a combustible veneer not to exceed 2/28 inches in thickness.

(l) Nitrocellulose or other highly flammable or noxious fume-producing paints or lacquers may not be used.

§149.209 SPM's.

Each SPM must meet the ''Rules for Building and Classing Single Point Moorings 1975'' of the American Bureau of Shipping, to the extent that these Rules are consistent with this subchapter.

§149.211 Emergency equipment.

Each platform must have installed mountings for each item of:

(a) Lifesaving equipment; and

(b) Portable and semiportable fire fighting equipment.

§149.213 Helicopter fueling facilities.

Helicopter fueling facilities must comply with the requirements of the National Fire Protection Association, National Fire Code No. 407, Part VI ''Fueling on Elevated Heliports''. For the purpose of this section, ''ground level'' as used in the National Fire Code means ''below the lowest platform working level''.

§149.215 Interference with helicopter operations.

Aids to navigation, communication, or radar equipment must be installed so as not to interfere with helicopter operations.

§149.217 First aid station.

Each PPC must have a first aid station that has an adjoining space for two beds.

Subpart C—Pollution Prevention Equipment

§149.301 Applicability.

This subpart prescribes requirements for pollution equipment that apply to each deepwater port.

§149.303 Overflow and relief valve.

(a) Each oil transfer system must include a relief valve, that, when activated, prevents pressure on any components of the OTS from exceeding maximum rated pressure.

(b) No oil transfer system overflow or relief valve may be installed so as to allow an oil discharge into the sea.

§149.305 Pipeline end manifold (PLEM) shutoff valve.

(a) Each pipeline end manifold (PLEM) at a single point mooring must have a shutoff valve.

(b) Each shutoff valve required by this section must be capable of operation from the Cargo Transfer Supervisor's normal place of duty.

(c) Each shutoff valve required by this section must be capable of manual operation.

§ 149.307 Blank flange and shutoff valve.

Each floating hose string must have a blank flange and a shutoff valve at the vessel manifold end.

§ 149.309 Manually operated shutoff valve.

Each oil transfer line passing through the SPM buoy must have a manual shutoff valve on the buoy.

§ 149.311 Malfunction detection system.

Each oil transfer system must have a system that can:

(a) Detect and locate all leaks and other malfunctions, between the PPC and the shore; and

(b) Be monitored at the Cargo Transfer Supervisor's normal place of duty.

§ 149.313 Oil transfer system alarm.

Each oil transfer system must have an alarm system to signal a malfunction or failure of the system that is—

(a) Capable of being activated at the Cargo Transfer Supervisor's normal place of duty;

(b) Audible in all parts of the PPC except in areas of high ambient noise levels where hearing protection is required under § 150.509(d) of this subchapter;

(c) Visible in areas of the PPC where hearing protection is required under § 150.509(d) of this subchapter by use of a high intensity flashing light; and

(d) Distinguishable from the general alarm.

§ 149.315 Marking of oil transfer system alarm.

(a) Each oil transfer alarm switch must be identified by the words ''OIL TRANSFER ALARM'' in red letters at least one inch high on a yellow background.

(b) Each audio and each visual oil transfer alarm signalling device under § 149.313 must have a sign with the words ''OIL TRANSFER ALARM'' in red letters at least one inch high on a yellow background.

§ 149.317 Communications equipment.

(a) Each deepwater port must have:

(1) A means that enables two-way voice communication among:

(i) The Cargo Transfer Supervisor;

(ii) The vessel's officer in charge of cargo transfer;

(iii) The Cargo Transfer Assistant;

(iv) The Port Superintendent;

(v) The master or person in charge of service craft operating at the deepwater port; and

(vi) The person in charge on the PPC;

(2) A means, which may be the communications system itself, that enables each of the persons listed in paragraph (a)(1) of this section to indicate his desire to communicate with another of those persons; and

(3) Communications equipment and facilities that must meet the requirements of 47 CFR 81 and 83.*

(b) Each portable means of communication used to meet the requirements of this section must be:

(1) Certified under 46 CFR 111.80–5 to be operated in a Group D, Class 1, Division 1, Atmosphere; and

(2) Permanently marked with the certification required in paragraph (b)(1) of this section.

§ 149.319 Discharge containment and removal material, and equipment.

(a) Each deepwater port must have stored, on the pumping platform or a service craft operating at the deepwater port, oil discharge containment and removal material and equipment that, to the extent best available technology allows, can contain and remove an oil discharge of at least 10,000 U.S. gallons for offload-only ports, or 40,000 U.S. gallons for ports where onloading operations are permitted pursuant to section 4(a)(3) of the Act.

(b) Each deepwater port must have readily accessible additional containment and removal material and equipment for containing and removing oil discharges larger than those specified in paragraph (a) of this section. For the purpose of this paragraph, access may be by direct ownership, joint ownership, cooperative venture, or contractual agreement.

(c) The type of discharge containment and removal material and equipment that best meets the requirements

*EDITORIAL NOTE: At 51 FR 31213, Sept. 2, 1986, 47 CFR 81 and 83 were removed.

of paragraphs (a) and (b) of this section must be determined on the basis of:

(1) Oil handling rates of the deepwater port;

(2) Volume of oil susceptible to being spilled;

(3) Frequency of oil transfer operations at the deepwater port;

(4) Prevailing wind and sea state condition at the deepwater port;

(5) Age, capability, arrangement of, and the licensee's experience with the oil transfer system equipment at the deepwater port; and

(6) Whether the discharge containment and removal material and equipment is shared, and the expected frequency of use and probability of availability.

§ 149.321 Special requirement for onloading ports.

Each deepwater port at which onloading operations are permitted, under section 4(a)(3) of the Act, must have a means for receiving oily residues from vessels.

Subpart D—Safety Equipment

§ 149.401 Applicability.

This subpart prescribes requirements for safety equipment that apply to each deepwater port.

§ 149.402 Equipment not required on a PPC.

Each item of lifesaving and fire fighting equipment on a PPC that is not required by this subpart must be approved under 46 CFR Part 160 or Part 162.

CURBS, GUTTERS, DRAINS, AND RESERVOIRS

§ 149.403 Curbs, gutters, drains, and reservoirs.

Each platform must have enough curbs, gutters, drains, and reservoirs to collect all of the following discharges and wastes in the reservoirs:

(a) All discharges from equipment, maintenance shops, and refueling facilities.

(b) All laboratory, sanitary, galley, and deck cleansing wastes, and similar wastes. Sanitary waste includes the waste from baths, showers, sinks, wash bowls, laundry, toilets and urinals.

EMERGENCY POWER

§ 149.411 Emergency power.

(a) Each PPC must have emergency power equipment to provide power to operate all of the following simultaneously for a continuous period of eight hours:

(1) Emergency lighting circuits.

(2) Aids to navigation equipment.

(3) Communications equipment.

(4) Radar equipment.

(5) Alarm systems.

(6) Electrically operated fire pumps.

(7) Other electrical equipment designated in the Operations Manual by the licensee.

(b) No emergency power generating equipment may be located in any enclosed space on a platform that contains oil transfer pumping equipment or other power generating equipment.

MEANS OF ESCAPE

§ 149.421 Means of escape from platform.

(a) Each platform must have at least one fixed and one unfixed means of escape from the highest working level to the water level with an entry at each working level.

(b) Each platform with living spaces must have at least two fixed means of escape from the highest level with living spaces to the water with an entry at each level below. If the highest level of the PPC contains living spaces, the two fixed means of escape required by this paragraph satisfy the requirements in paragraph (a) of this section.

(c) Each platform must have at least one fixed or unfixed means of escape for every ten persons on board the platform, including the means of escape required under paragraphs (a) and (b) of this section.

(d) When two or more fixed means of escape are installed, at least two must be as far from each other as practicable.

(e) Each fixed means of escape required under this section must be a steel ladder or steel stairway.

(f) Each unfixed means of escape required under this section must be:

(1) A portable ladder;

(2) A flexible ladder; or

(3) A knotted man rope.

(g) Two exits must be provided from each space having over 300 square feet of floor area. Where practicable, the exits must give egress to different corridors, rooms, or spaces.

(h) Exits must provide egress to the external means of escape required in this section. Dead end corridors may not be longer than 40 feet.

§ 149.423 Means of escape from helicopter landing pad.

Each helicopter landing pad on the PPC must have at least two fixed means of escape that are independent of those required by § 149.421:

(a) From the pad to the first working level below the pad or the water; and

(b) As far from each other as practicable.

PERSONNEL LANDINGS

§ 149.431 Personnel landings.

Each PPC must have at least two personnel landings for access to the platform from the water unless:

(a) Personnel landings are not possible because of the PPC design; and

(b) The PPC has a personnel basket transfer system.

§ 149.433 Personnel landing illumination.

Each personnel landing must have at least 1 foot-candle of artificial illumination on its guard rails or fence and on its deck.

GUARDRAILS, FENCES, NETS, AND TOEBOARDS

§ 149.441 Open sided deck, deck opening, catwalk, and helicopter pad protection.

(a) Each open sided deck, deck opening, and catwalk on each PPC must have protection that meets the ''Safety Requirements for Floor and Wall Openings, Railings, and Toeboards'' of the American National Standards Institute (ANSI A12.1), except each must have toeboards.

(b) Each open side of each helicopter landing pad on the PPC must have:

(1) Safety net; or

(2) A lowered walkway that is 48 inches wide, is not more than 42 inches below the level of the pad, and has guard rails that meet the requirements of ANSI A12.1, except each must have toeboards.

FIXED FIRE MAIN SYSTEM FOR WATER

§ 149.451 Fixed fire main system for water.

Each PPC must have a fixed fire main system for water.

§ 149.453 Fire pumps.

(a) Each PPC must have at least two independently driven fire pumps that can deliver two streams of water at a continuous pitot tube pressure of at least 75 p.s.i. at each fire hose nozzle.

(b) Each fire pump must have:

(1) A relief valve on its discharge side that is set to relieve at 25 p.s.i. in excess of the pressure necessary to meet the requirement in paragraph (a) of this section;

(2) A pressure gauge on its discharge side; and

(3) Its own water source.

(c) Fire pumps may only be connected to the fire main system.

§ 149.455 Fire pump location.

The fire pumps required by § 149.453(a) may not be located in the same space.

§ 149.457 Fire hydrants.

(a) Each part of the PPC that is accessible to any person, except machinery spaces, must have enough fire hydrants so that it can be sprayed with at least two spray patterns of water. At least one spray pattern of water must be from one length of hose.

(b) Each PPC must have enough fire hydrants so that each machinery space can be sprayed with at least two spray patterns of water from separate hydrants. Each spray pattern of water must be from one length of hose.

(c) A single length of fire hose, with nozzle attached, must be connected to each fire hydrant at all times.

§ 149.459 Fire hydrant outlet.

The outlet on each fire hydrant must not point above the horizontal.

§149.461 Fire hydrant and control valve shutoff valve.

Each fire hydrant and control valve must have a shutoff valve.

§149.463 Fire hydrant access.

Any equipment that is in the same space as a fire hydrant must not interfere with access to that hydrant.

§149.465 Spanner.

Each fire hydrant must have at least one spanner at the fire hydrant.

§149.467 Fire hose rack.

(a) Each PPC must have a hose rack at each hydrant.

(b) Each fire hose rack must be visible.

(c) Each fire hose rack in an exposed location must be protected from weather.

§149.469 Fire hose size.

Each length of fire hose must be:

(a) 1½ or 2½ inch nominal hose size diameter;

(b) 50 foot nominal hose size length; and

(c) Lined commercial fire hose that conforms to Underwriters Laboratories, Inc. Standard 19 or Federal specification ZZ–H–451D.

§149.471 Fire hose coupling.

Each fire hose coupling must:

(a) Be made of brass, bronze, or material that has strength and corrosion resistant properties at least equal to those of brass or bronze; and

(b) Have 9 threads per inch for 1½ inch hose or 7½ threads per inch for 2½ inch hose.

§149.473 Fire hose nozzle.

Each fire hose nozzle must be a combination solid stream and water spray fire hose nozzle that is approved under 46 CFR 162.027.

§149.477 Spray applicator.

Each PPC must have a low velocity spray applicator that is approved under 46 CFR 162.027 at each fire hydrant.

§149.479 International shore connection.

(a) The fixed fire main system of a PPC must have:

(1) At least two risers;

(2) A cutoff valve and check valve for each riser; and

(3) At least two international shore connections that meet the requirements in 46 CFR 162.034.

(b) Each riser must be in an accessible location to vessels alongside the PPC, and two of the risers must be on opposite sides of the PPC.

OTHER FIRE EXTINGUISHING SYSTEMS

§149.481 Other fire extinguishing systems.

(a) Each PPC must have a manually or automatically operated fire extinguishing system in addition to the fire main system required under §149.451 that is approved by the Commandant and meets the National Fire Protection Association standards listed in paragraph (e) of this section in the following locations:

(1) Storerooms.

(2) Workrooms containing flammable liquids.

(3) Pump rooms.

(4) Machinery spaces.

(b) Each halogenated agent or CO_2 system in a compartment smaller than 6,000 cubic feet, and each sprinkler system, must be automatic.

(c) Each halogenated agent or CO_2 system in a compartment larger than 6,000 cubic feet, and each foam system, must be manual.

(d) The systems selected must match the hazard to be protected as follows:

(1) Storerooms must use water sprinklers or CO_2.

(2) Workrooms containing flammable liquids, pumprooms, and machinery spaces must use CO_2, halogenated agents, or high expansion foam.

(e) Each system required under paragraph (a) of this section must meet one of the following performance standards:

(1) Water sprinkler system—NFPA No. 13.

(2) Carbon dioxide system—NFPA No. 12.

(3) Halogenated agent system—NFPA No. 12A.

(4) Foam system—NFPA No. 11A.

(f) Arrangement requirements contained in 46 CFR 95.15–10, 15 and 20 must be complied with.

(g) Each system required under paragraph (a) of this section must activate the general alarm system when it operates.

(h) Spaces that are protected by a carbon dioxide system or halogenated agent system and are normally accessible to persons on board must be fitted with an approved audible alarm that sounds automatically 20 seconds before the extinguishing agent is admitted to the space. The alarm must be conspicuously and centrally located.

(i) To the extent practicable, materials in each item of equipment required by paragraph (a) of this section must have resistance to the adverse effects of the marine environment.

§ 149.483 Fire fighting system for helicopter pads.

(a) Each PPC helicopter landing pad must have the following:

(1) A fire extinguishing system designed to:

(i) Deliver a minimum of 200 g.p.m. of water at the pressure required to overcome friction in the piping and hose lines, and produce the nozzle discharge requirements in paragraph (a)(2)(ii) of this section for 15 minutes; and

(ii) Not interfere with the simultaneous operation of the fire main.

(2) Shutoff type nozzles designed:

(i) For use with a foam concentrate listed or approved by a recognized testing agency for fire extinguishing agents;

(ii) To discharge water-foam concentrate solution or water fog at a rate of 100 g.p.m. at a pressure that will provide a foam discharge pattern at a 20 foot range with 15 foot width variable to a solid stream of foam with a minimum 50 foot range; and

(iii) To produce foam having a minimum expansion of eight, with a 25 percent drainage time of at least 5 minutes when protein base foam is used.

(3) Nozzles located so as to provide complete coverage of the helicopter landing area.

(4) A means of activating the general alarm system required by § 149.541.

(b) Aqueous film forming foam (AFFF) may be substituted for protein base foam. Generally, the quantity of water may be reduced by 30 percent from that specified for use with protein base foam. This reduction will be authorized by the Commandant on a case-by-case basis.

(c) Other extinguishing agents that would provide an equivalent fire fighting capability may be substituted with the approval of the Commandant.

FIRE DETECTION AND ALARM SYSTEMS

§ 149.491 Fire detection and alarm systems.

(a) Each PPC must have the following fire detection systems that activate the general alarm system:

(1) An ionization type automatic smoke detection system in each sleeping space.

(2) A combination fixed-temperature and rate-of-rise heat detector system in each non-sleeping space that does not have an automatic fire extinguishing system unless the space is subject to a 15 °F or greater per minute rate of rise.

(3) A fixed-temperature detector system in each nonsleeping space that does not have an automatic fire extinguishing system and that is subject to a 15 °F or greater per minute rate of rise.

(b) To the extent practicable, materials in each item of equipment required by this section must have resistance to the adverse effects of the marine environment.

PORTABLE AND SEMIPORTABLE FIRE FIGHTING EQUIPMENT

§ 149.501 Portable and semiportable fire extinguishers.

(a) Each PPC must have portable or semiportable fire extinguishers that are approved by the Coast Guard under 46 CFR 162.028 or 162.039.

(b) Each semiportable fire extinguisher must be fitted with hose and nozzle or other apparatus so that the entire space in which the extinguisher is located may be protected.

§149.503 Location of extinguishers.

(a) Fire extinguishers must be installed in accordance with Table 145.10(a) in §145.10 of this chapter.

(b) Each fire extinguisher must be located so it can easily be seen.

§149.505 Spare charges.

(a) Spare charges must be carried for at least 50 percent of each size and variety of hand portable fire extinguisher required in §149.503. If an extinguisher is of such variety that it cannot be readily recharged by PPC personnel, one spare extinguisher of the same classification must be carried in lieu of a spare charge.

(b) Spare charges must be packed to minimize the hazards to personnel while recharging extinguishers. Acid must be contained in a crown stopper type of bottle.

§149.507 Marking.

Each hand portable extinguisher and its station must be numbered in accordance with 46 CFR 97.37–23.

§149.511 Landing area with no fueling facility.

In addition to the requirements in §149.483 of this subchapter each helicopter landing area on a PPC with no fueling facility must have at least two USCG type B:C, size IV dry chemical extinguishers.

§149.513 Landing area with a fueling facility.

In addition to the requirements in §149.483 each helicopter landing area on the PPC with a fueling facility must have:

(a) At least two USCG Type B:C, size II dry chemical extinguishers and at least one USCG Type B:C, size V dry chemical extinguisher; and

(b) A USCG Type B:C, size II dry chemical extinguisher at the emergency control station.

§149.515 Fire axes.

(a) Each PPC must have at least 8 fire axes.

(b) Fire axes must be distributed so as to be readily available in an emergency.

(c) Each fire axe must be located:

(1) In the open;

(2) Behind glass; or

(3) In an enclosure with a fire hose.

§149.517 Fireman's outfits.

(a) Each platform must have at least 2 fireman's outfits.

(b) Each fireman's outfit must consist of:

(1) A self-contained breathing apparatus approved under 49 CFR 160.011 with a complete recharge.

(2) A three-cell, intrinsically safe flashlight with the Underwriters' Laboratories, Inc., label and a set of spare batteries for the flashlight.

(3) An oxygen and combustible gas indicator with the Underwriters' Laboratories, Inc., label, or Factory Mutual Testing Laboratories, Inc., label.

(4) Boots and gloves that are made of rubber or other electrically nonconductive material.

(5) A helmet that meets the requirements in Section 5 of the United States of America Standard Safety Code (Z2.1).

(6) Clothing that protects the skin from scalding steam and the heat of fire and that has a water resistant outer surface.

(c) Equipment must be stowed in a convenient, readily accessible location.

LIFESAVING EQUIPMENT

§149.521 Lifeboats and inflatable life rafts: general.

(a) Each PPC must have enough lifeboats or inflatable life rafts, or a combination of both, for 200% of the maximum number of personnel to be quartered or employed on the PPC, except that each PPC must have at least two lifeboats. The Commandant may reduce this requirement to a minimum of 150% under §148.607 when it can be shown that the specific arrangements and separation of equipment provides sufficient redundancy.

(b) Each lifeboat and launching equipment for an inflatable life raft on a platform must be mounted on the outboard side of the platform in a location that is easily accessible to persons on board and that is as far apart as practicable from each other lifeboat.

(c) No lifeboat and no launching equipment for an inflatable life raft may be mounted next to a discharge

opening on a platform unless the opening has a baffle or a remotely controlled device to close the opening.

(d) Each lifeboat and life raft launching station must be provided with emergency lighting to illuminate the entire launching process from the stowed position until the craft is waterborne.

§ 149.522 Lifeboats.

(a) Each lifeboat on a platform must be approved under 46 CFR 160.035 and have the equipment required by 46 CFR 94.20–10 for a lifeboat on lakes, bays, sounds, and rivers. Except for boathooks, the equipment must be securely attached to the lifeboat.

(b) Each life boat on a platform must be motor propelled and have an installed cover that provides protection from exposure and from fire during operation of the lifeboat.

§ 149.523 Inflatable life rafts.

Each inflatable life raft on a platform must be approved under 46 CFR 160.051 as an inflatable life raft intended for an ocean service vessel.

§ 149.524 Launching equipment for lifeboats.

(a) Each PPC must have the following launching equipment for each lifeboat required by § 149.521:

(1) A winch that is approved under 46 CFR 160.015 and that has a grooved drum with only one layer of wire.

(2) Mechanical disengaging apparatus that is approved under 46 CFR 160.033.

(3) Davits that are approved under 46 CFR 160.032.

(4) Load bearing components that meet the requirements in 46 CFR 94.33–5 (a), (c), (d), and (e) and 46 CFR 94.33–10.

(b) If a lifeboat is mounted more than 30 feet above mean low water, the launching equipment for the lifeboat must be capable of operation from the lifeboat and from the PPC.

§ 149.525 Launching equipment for inflatable life rafts.

(a) Each PPC must have enough of the following inflatable life raft launching equipment to launch all of the life rafts required by § 149.521 within 20 minutes:

(1) Winches that are approved by the Commandant.

(2) Mechanical disengaging apparatus that is approved by the Commandant.

(3) Davits that are approved by the Commandant.

(4) Load bearing components that meet the requirements in 46 CFR 94.33–5 (a), (c), (d), and (e) and 46 CFR 94.33–10.

(b) Launching equipment for an inflatable life raft must be capable of being operated from the life raft and from the PPC.

(c) No more than two rafts may be launched from each launching station.

§ 149.526 Approved ring life buoys (Type IV personal flotation devices).

(a) Each PPC must have at least 8 approved ring life buoys (Type IV PFDs) and mounting racks distributed about the perimeter of the platform.

(b) Each ring life buoy must be constructed in accordance with 46 CFR Subpart 160.050 except a ring life buoy that was approved under former 46 CFR Subpart 160.009 may be used as long as it is in good and serviceable condition. Each ring life buoy must be of the 30-inch size, international orange, and easily accessible to persons on board.

(c) At least fifty percent of the ring life buoys required by this section must have an electric water light approved under 46 CFR 161.010.

(d) At least one ring life buoy on each side of the platform must have a buoyant line attached to it that is 1½ times the distance from the buoy to the mean low water line of the platform, or 15 fathoms in length, whichever is greater.

[CGD 80–155b, 47 FR 10533, Mar. 11, 1982]

§ 149.527 Portable radio apparatus.

Each PPC must have portable radio apparatus that meets the requirements in 46 CFR 94.55–1.

§ 149.529 Type I personal flotation devices (PFD's).

(a) Each PPC must have enough adult Type I PFD's for 100 percent of the port personnel. Each PFD must be stowed in the living spaces.

(b) Enough additional Type I PFD's for 50 percent of the port personnel must be stowed near working spaces in

well ventilated and accessible lockers marked ''life preservers.''

§149.533 Litters.

Each platform must be equipped with at least one Stokes litter that is placed in a location that is accessible to persons on board.

§149.535 Markings on lifeboats, life rafts, paddles, and oars.

(a) Each lifeboat, and life raft must be marked in letters and numbers at least 1½ inch high with:

(1) The identification of the deepwater port; and

(2) The personnel capacity.

(b) Each inflatable life raft must be marked as required under 46 CFR 160.051.

(c) Each paddle and each oar must be marked with the identification of the deepwater port.

§149.537 Markings for personal flotation devices (PFD's).

Each PFD must be marked with the identification of the deepwater port.

MISCELLANEOUS

§149.539 Portable lights.

(a) Each portable light on a PPC must be listed by Underwriters' Laboratories, Inc., as suitable for Class I, Group D hazardous locations.

(b) Each supply cord of the portable lighting units must have receptacles with plugs, or receptacles with plugs interlocked with snap switches, that are listed by Underwriters' Laboratories, Inc., as suitable for Class I, Group D hazardous locations.

§149.541 General alarm system.

(a) Each PPC must have a general alarm system.

(b) Each general alarm system must be:

(1) Capable of being activated by the automatic fire detection systems required under §149.491 and manually by use of alarm boxes located in accordance with the National Fire Protection Association Standard No. 72A;

(2) Audible in all parts of the PPC except in areas of high ambient noise levels where hearing protection is required under §150.509(d) of this subchapter; and

(3) Visible in areas of the PPC where hearing protection is required under §150.509(d) of this subchapter by use of a high intensity flashing light.

§149.543 Marking of general alarm system.

(a) Each general alarm box must be marked with the words ''GENERAL ALARM'' in red letters at least one inch high on a yellow background.

(b) Each audio and each visual general alarm signalling device under §149.541 must have a sign with the words ''GENERAL ALARM'' in red letters at least one inch high on a yellow background.

§149.545 Public address system.

Each PPC must have a public address system operable from two locations on the PPC to allow an announcement of fires, oil transfer system failure or malfunction, and other emergencies.

Subpart E—Aids to Navigation at Deepwater Ports

GENERAL

§149.701 Applicability.

This subpart prescribes the minimum requirements for aids to navigation at the marine site.

§149.703 Effective intensity: Definition.

For the purpose of this subpart, ''effective intensity'' is the intensity of a flashing light calculated by using equation [3–27] for effective intensity in the Illumination Engineering Society Lighting Handbook, p. 3–36.

§149.705 Applicability of other regulations.

Sections 66.01–5, 66.01–25 (a) and (c), 66.01–50, and 66.01–55 of this chapter also apply to aids to navigation at a deepwater port. For the purpose of §66.01–25 (a) and (c) of this chapter, aids to navigation at a deepwater port are Class I aids to navigation.

§ 149.707 Applications for aids to navigation.

(a) 180 days before the installation of any structure at the deepwater port site the licensee must submit applications for obstruction lights and such other private aids to navigation appropriate for the particular construction site.

(b) 180 days before the commencement of oil transfer operations or changing the mooring facilities at the deepwater port the licensee must submit applications for private aids to navigation.

(c) Applications for private aids to navigation for deepwater ports must be submitted in accordance with § 66.01–5 of this chapter except that the applications must be submitted to the Commandant (G–M).

[CGD 75–002, 40 FR 52565, Nov. 10, 1975, as amended by CGD 88–052, 53 FR 25121, July 1, 1988]

SPECIFICATIONS FOR LIGHTS

§ 149.721 Light source.

Each light must have a tungsten-incandescent light source.

§ 149.723 Intensity.

(a) Each light on a buoy, hose string, and SPM must:

(1) Have at least the effective intensity required by this subpart for the light at all angles, the origin of which is the focal point of the light, that are included within ±1° from the focal plane of the light; and

(2) Have at least 50% of the effective intensity required by this subpart for the light at all angles, the origin of which is the focal point of the light, that are included within ±2° from the focal plane of the light.

(b) Each light on a platform, including the rotating lighted beacon, must:

(1) Have at least the effective intensity required by this subpart at all angles within ±0.5° of the horizontal plane that includes the focal point of the lens; and

(2) Have at least 50% of the effective intensity required by this subpart for the light at angles within ±1° of the horizontal plane that includes the focal point of the lens.

§ 149.724 Focus.

Each light using a lens must have a means to verify that the light source is at the focal point of the lens.

§ 149.725 Color.

The transparent cover of each light, including, where applicable, the top of the cover, must be uniform in color.

§ 149.727 Chromaticity.

The color emitted by a light at all angles, within the 50% effective intensity angle under § 149.723 must have chromaticity coordinates lying within the boundary defined by the corner coordinates in Table 149.727 when plotted on the International Commission on Illumination (CIE) Standard Observer Diagram.

TABLE 149.727—CHROMATICITY COORDINATES

Color	Chromaticity coordinates	
	x axis	*y* axis
White	0.285	0.332
	.453	.440
	.500	.440
	.500	.382
	.440	.382
	.285	.264
Green	.009	.720
	.284	.520
	.207	.397
	.013	.494
Red	.665	.335
	.645	.335
	.680	.300
	.700	.300
Yellow	.560	.440
	.555	.435
	.612	.382
	.618	.382

§ 149.729 Display of information.

(a) The following information must be displayed on each light:

(1) The manufacturer's name and date of manufacture.

(2) The model designation.

(3) The name of the manufacturer of the lamp to be used, and the manufacturer's ordering code for the lamp.

(4) The minimum voltage, measured at the input terminals of the lighting apparatus with the lamp burning, needed to operate the light in compliance with the intensity requirements of this subpart.

(b) The following information must be displayed on each rotating lighted beacon:

(1) The information prescribed in paragraph (a) of this section.

(2) The operating speed of the rotating apparatus.

(3) The type and level of electrical input required to maintain the operating speed.

OBSTRUCTION LIGHTS

§149.751 Number and location on a platform and SPM.

(a) A platform that is 30 feet or less on any side, or in diameter, must have at least one obstruction light.

(b) An SPM must have at least one obstruction light.

(c) A platform that is more than 30 feet but less than 50 feet on any side, or in diameter, must have at least two obstruction lights that are installed as far apart from each other on the platform as possible.

(d) A platform that is more than 50 feet on any one side must have one obstruction light installed on each corner.

(e) A circular platform that has a diameter of more than 50 feet must have at least 4 obstruction lights that are installed as far apart from each other on the platform as possible.

(f) At least one of the obstruction lights on each platform and SPM must be visible from the water regardless of the angle of approach to the structure.

(g) If a platform or SPM has more than one obstruction light, the lights must all be installed in the same horizontal plane.

(h) Each obstruction light on a platform must be installed at least 20 feet above mean high water.

(i) Each obstruction light on an SPM must be installed at least 10 feet above the water.

§149.753 Number and location on a floating hose string.

A floating hose string must have omnidirectional obstruction lights that are:

(a) Installed at equally spaced intervals of not more than 70 feet along the length of the hose string, except that the two sections of hose furthest from the SPM need not have lights; and

(b) Installed all at the same height and at no less than 2 nor more than 5 feet above the surface of the water.

§149.755 Characteristics.

(a) Each obstruction light on a platform or SPM must:

(1) Be white; and

(2) Flash 50 to 70 times per minute.

(b) If a platform or SPM has more than one obstruction light, the lights must flash simultaneously.

(c) Each obstruction light on a hose string must:

(1) Be yellow; and

(2) Flash 50 to 70 times per minute.

§149.757 Intensity.

(a) Each obstruction light on a platform must have an effective intensity of at least 75 candela.

(b) Each obstruction light on an SPM must have an effective intensity of at least 15 candela.

(c) Each obstruction light on a hose string must have an effective intensity of at least 1 candela.

§149.759 Leveling.

Each obstruction light installed on a platform must have:

(a) Mounting hardware incorporating devices that facilitate horizontal leveling of the light; and

(b) A leveling indicator, or indicators, each with an accuracy of ±0.25 degrees, permanently attached to the light.

BUOYS

§149.771 Number and location.

Each lateral boundary of a traffic lane at a deepwater port must be marked with buoys that are no more than 5 miles apart.

§149.773 Characteristics.

(a) Each buoy at a deepwater port must:

(1) Meet the requirements in §62.25 of this chapter for buoys in United States waters; and

(2) Have:

(i) A radar reflector; and

(ii) A light installed at least 8 feet above the water.

(b) For each traffic lane, the buoy that is furthest from the safety zone

must have a fog signal of a type described in Subpart 62.45 of Part 62 of this chapter.

§ 149.775 Intensity of lights.

(a) Each fixed light on a buoy must have an intensity of at least 75 candela.

(b) Each flashing light on a buoy must have an effective intensity of at least 75 candela.

MISCELLANEOUS

§ 149.791 Identification of a platform and SPM.

(a) Each platform and SPM must display the name of the port, and the name or number or both identifying the structure, so that the information is visible:

(1) From the water at all angles of approach to the structure; and

(2) If the structure is equipped with a helicopter pad, from aircraft on approach to the structure.

(b) The information required in paragraph (a) of this section must be displayed in numbers and letters that are:

(1) At least 12 inches high;

(2) In vertical block style; and

(3) Displayed against a contrasting background.

§ 149.793 Markings for piles and pile clusters.

(a) Each pile and pile cluster that is within 100 yards of a platform or SPM must be marked with white reflective tape.

(b) Each pile and pile cluster that is more than 100 yards from a platform or SPM must meet the obstruction lighting requirements in this subpart for a platform.

§ 149.795 Radar beacon.

The tallest platform must have an FCC type accepted radar beacon (RACON) that:

(a) Transmits in—

(1) Both the 2900–3100 MHz and 9300–9500 MHz frequency bands, or

(2) The 9320–9500 MHz frequency band if installed prior to July 8, 1991.

(b) Transmits a signal of a least 250 milliwatts radiated power that is omnidirectional and polarized in the horizontal plane;

(c) Transmits a 2 or more element Morse code character, the length of which does not exceed 25% of the radar range expected to be used by vessels operating in the area;

(d) If of the frequency agile type, is programmed so that it will respond at least 40% of the time but not more than 90% of the time, with a response time duration of at least 15 seconds; and

(e) Is installed at a minimum height of 15 feet above the highest deck of the platform and where the structure of the platform, or equipment mounted thereon, does not obstruct the signal propagation in any direction.

[CGD–90–016, 56 FR 21082, May 7, 1991]

§ 149.797 Rotating lighted beacon.

The tallest platform must have a rotating lighted beacon that:

(a) Has an effective intensity of at least 15,000 candela;

(b) Flashes at least once every 20 seconds;

(c) Has a white light;

(d) Is installed:

(1) At least 60 feet above mean high water;

(2) Where the structure of the platform, or equipment mounted thereon, does not obstruct the propagation of the light in any direction; and

(3) So as to be visible all around the horizon;

(e) Operates in wind up to 100 knots at a speed that is within 6% of the operating speed displayed on the beacon.

(f) [Reserved]

(g) Has a leveling indicator, or indicators, each with an accuracy of ±0.25 degrees, permanently attached to the light.

§ 149.799 Fog signal.

(a) Each PPC must have a Coast Guard approved fog signal that has a 2 mile range.

NOTE: A list of Coast Guard approved fog signals may be obtained from the Commandant (G–M).

(b) Each fog signal on a PPC must:

(1) Be installed at least 10 feet but not more than 150 feet above mean high water; and

(2) Be installed where the structure of the platform, or equipment mounted

thereon, does not obstruct the propagation of sound in any direction.

[CGD 75–002, 40 FR 52565, Nov. 10, 1975, as amended by CGD 88–052, 53 FR 25121, July 1, 1988]

PART 150—OPERATIONS

Subpart A—General

Sec.
150.101 Applicability.
150.103 Licensee.
150.105 Operations Manual: General.
150.106 Operations Manual: Copies.
150.107 Operations Manual: Amendment.
150.109 Compliance with Operations Manual.
150.113 Deviations.
150.115 Emergency deviations.
150.117 Notification to the District Commander.
150.119 Notification to the Commandant.
150.121 ABS classification.
150.123 Weather monitoring.
150.125 Water depth measurements.
150.127 Environmental monitoring.
150.129 Response plans.

Subpart B—Personnel

150.201 Applicability.
150.203 General.
150.204 Definitions.
150.205 Port Superintendent.
150.207 Cargo Transfer Supervisor.
150.209 Vessel Traffic Supervisor.
150.211 Mooring Master.
150.213 Cargo Transfer Assistant.
150.215 Assistant Mooring Master.
150.217 Limitation on service.

Subpart C—Vessel Navigation

150.301 Applicability.
150.303 Definitions.
150.305 Ships' routing measures.
150.307 Radar surveillance.
150.309 Advisories to tankers.
150.311 Radio listening watch.
150.313 Clearances for tankers.
150.315 Clearances for support vessels.
150.317 Clearances for other vessels.
150.333 Advance notice of arrival.
150.335 Report before entering safety zone.
150.337 Navigation of tankers in the safety zone.
150.338 Navigation of support vessels in the safety zone.
150.339 Navigation of other vessels in the safety zone.
150.341 Mooring Master.
150.342 Assistant Mooring Master.
150.345 Regulated vessel activities.

Subpart D—Oil Transfer Operations

150.400 Applicability.
150.403 Definitions.
150.405 Periodic tests and inspections: OTS components.
150.407 Periodic tests and inspections: discharge containment equipment.
150.409 Periodic tests and inspections: removal material and equipment.
150.411 Repair or replacement of equipment.
150.413 Requirements for oil transfer.
150.415 Requirements for connections.
150.417 Declaration of inspection.
150.419 Stopping transfer operations.
150.421 Displacement of oil in an SPM–OTS with water.
150.423 Limitations.
150.425 Suspension of oil transfer operations.

Subpart E—Operations

150.500 Applicability.
150.503 Maintenance of equipment.
150.504 Fire main system.
150.505 Fire pump.
150.507 Firehose: Connection and stowage.
150.508 Lifesaving equipment.
150.509 Use of personal protection equipment.
150.511 Maintenance of personal protection equipment.
150.513 Sanitation.
150.515 Refueling for aircraft.
150.516 Aircraft operations.
150.517 Station bill.
150.519 Emergency drills.
150.521 Housekeeping.
150.523 Illumination.
150.525 Emergency Medical Technician.
150.527 First aid station.

Subpart F—Aids to Navigation at Deepwater Ports

150.601 Applicability.
150.603 Applicability of other regulations.
150.605 Aids to navigation: power supply.
150.607 Lights.
150.611 Fog signals.

Subpart G—Reports and Records

150.701 Applicability.

REPORTS

150.703 Maintenance of ABS classification.
150.705 Aid to navigation discrepancy.
150.707 Oil throughput report.
150.711 Casualty or accident.
150.713 Sabotage or subversive activity.

RECORDS

150.751 General.
150.753 Key personnel: Designations and qualifications.
150.755 Port inspection records.
150.757 Oil throughput log.
150.759 Declaration of inspection.

APPENDIX A TO PART 150—DEEPWATER PORT SAFETY ZONE BOUNDARIES

AUTHORITY: 33 U.S.C. 1231, 1321(j)(1)(C), (j)(5), (j)(6) and (m)(2), 1509; sec. 2, E.O. 12777, 56 FR 54757; 49 CFR 1.46.

SOURCE: CGD 75–002, 40 FR 52572, Nov. 10, 1975, unless otherwise noted.

Subpart A—General

§ 150.101 Applicability.

The rules in this part apply to the operation of each deepwater port.

§ 150.103 Licensee.

(a) No licensee of a deepwater port may cause or authorize operations contrary to the rules in this part.

(b) The licensee shall ensure that the port meets the equipment requirements in Part 149 of this chapter.

§ 150.105 Operations Manual: General.

(a) The licensee of a deepwater port may not operate the port unless the port has an Operations Manual that:

(1) Is prepared in accordance with the ''Guidelines for Preparation of a Deepwater Port Operations Manual''; and

(2) Has been approved by the Commandant.

(b) For the purpose of this section, ''approved'' means only that the Operations Manual meets the requirements of the Act and the regulations in this subchapter.

NOTE: The ''Guidelines for Preparation of a Deepwater Port Operations Manual'' may be obtained from the Commandant (G–M).

[CGD 75–002, 40 FR 52572, Nov. 10, 1975, as amended by CGD 88–052, 53 FR 25121, July 1, 1988]

§ 150.106 Operations Manual: Copies.

The licensee shall furnish 25 copies of the approved Operations Manual and each subsequent amendment to Commandant (G–M).

NOTE: The Commandant will distribute copies of the approved Operations Manual and subsequent amendments within the Coast Guard and to the Governor of the adjacent coastal State connected directly by pipeline to the deepwater port.

[CGD 75–002, 40 FR 52572, Nov. 10, 1975, as amended by CGD 88–052, 53 FR 25121, July 1, 1988]

§ 150.107 Operations Manual: Amendment.

(a) The Captain of the Port may require the licensee to amend the Operations Manual if he finds that the Operations Manual does not comply with § 150.105.

(b) When the Captain of the Port determines that an amendment to an operations manual is necessary, he notifies the licensee in writing of a date not less than 14 days from the date of the notice, on or before which the licensee may submit written information, views, and arguments on the amendment. After considering all relevant material presented, the Captain of the Port notifies the licensee of any amendment required or he rescinds the notice. The amendment becomes effective not less than 30 days after the licensee receives the notice unless the licensee petitions the Commandant to reconsider the amendment, in which case its effective date is stayed pending a decision by the Commandant. Petitions to the Commandant must be submitted in writing to the Captain of the Port.

(c) If the Captain of the Port finds a situation that requires immediate action to prevent the discharge or risk of discharge of oil or to protect the safety of life and property that makes the procedure in paragraphs (a) and (b) of this section impracticable or contrary to the public interest, he may issue an amendment effective, without stay, on the date the licensee receives notice of it. In such a case, the Captain of the Port includes a brief statement of the reasons for his finding in the notice, and the licensee may petition the District Commander, in any manner, to reconsider the amendment.

(d) Adjacent coastal States connected by pipeline to the deepwater port and licensees may petition the Captain of the Port to amend the Operations Manual. The Captain of the Port, when in receipt of a proposed amendment, will solicit comments on the proposed amendment. The petition and comment should include sufficient relevant information to enable the Captain of the Port to reach a decision to adopt or reject the proposed amendment. The Captain of the Port may approve amendments to the Operations Manual if he

finds that the proposed alternative procedure, method, or equipment will ensure equivalent or improved protection, safety, or quality level and is in compliance with this subchapter.

§ 150.109 Compliance with Operations Manual.

Each licensee shall use and require his personnel to use the procedures in the Operations Manual.

§ 150.113 Deviations.

The Captain of the Port may authorize a deviation in writing upon request, if he finds that the proposed alternative procedure, method or equipment would ensure equivalent protection, safety, or quality level.

§ 150.115 Emergency deviations.

In an emergency, for the protection of life or property, or to avoid danger to the environment, any person may deviate from the Operations Manual or any requirement of deepwater port regulations. As soon as practicable, the person shall report the nature, extent, and duration of each deviation orally or in writing to the Captain of the Port.

§ 150.117 Notification to the District Commander.

(a) At least 30 days before construction of a pipeline, platform, or SPM at a deepwater port begins, the licensee shall give notice of construction in writing to the District Commander.

(b) On the date construction of a pipeline, platform or SPM at a deepwater port begins, the licensee shall give written notice to the District Commander within 24 hours of the lights and fog signals in use at the construction site.

(c) Whenever lights or fog signals are changed during construction of a pipeline, platform, or SPM at a deepwater port, the licensee shall give written notice of such change to the District Commander within 24 hours.

(d) When lights or fog signals used during construction of a platform, buoy, or SPM at a deepwater port are replaced with lights or fog signals required by Part 149 of this subchapter, the licensee shall give written notice of replacement to the District Commander within 24 hours.

(e) At least 60 days before the first oil transfer operation begins at a deepwater port, the licensee shall give written notice of the operation to the District Commander.

[CDG 75–002, 40 FR 52572, Nov. 10, 1975; 40 FR 58143, Dec. 15, 1975]

§ 150.119 Notification to the Commandant.

The licensee shall give notice, in writing, to the Commandant upon receipt of the American Bureau of Shipping:

(a) ''Interim Class Certificate''; and

(b) ''Classification Certificate'' for an SPM at a deepwater port.

§ 150.121 ABS classification.

(a) No licensee may operate an SPM unless he has an American Bureau of Shipping (ABS) ''Interim Class Certificate'' or a ''Classification Certificate'' for the SPM.

(b) A certificate must classify the SPM and attached hoses.

(c) The licensee shall maintain in class each SPM having a Classification Certificate.

§ 150.123 Weather monitoring.

The terminal supervisor shall continuously monitor the wind, wave, current, and visibility conditions at the port.

§ 150.125 Water depth measurements.

(a) The licensee shall measure water depth in the marine site if the Captain of the Port notifies the licensee that:

(1) A severe storm may have significantly altered water depths;

(2) Gradual natural or man-induced processes may have significantly altered water depths; or

(3) User experience indicates that charted water depths may no longer be accurate.

(b) The accuracy and adequacy of water depth measurements must be sufficient for nautical chart maintenance purposes.

§ 150.127 Environmental monitoring.

The licensee shall monitor the environment in accordance with the environmental monitoring program set

forth in the approved Operations Manual for the port.

§ 150.129 Response plans.

(a) The owner or operator of a deepwater port shall prepare and submit a response plan meeting the requirements of subpart F of part 154 for review and approval by the cognizant Captain of the Port (COTP).

(b) A response plan must be submitted to the cognizant COTP by February 18, 1993 or not less than 60 days before the port begins operation, which ever is later.

[CGD 91–036, 58 FR 7352, Feb. 5, 1993]

Subpart B—Personnel

§ 150.201 Applicability.

This subpart prescribes personnel qualifications that apply to each deepwater port.

§ 150.203 General.

No person may serve and the licensee may not use the services of a person in the following capacities unless that person reads, writes and speaks English.

(a) Port Superintendent.
(b) Cargo Transfer Supervisor.
(c) Cargo Transfer Assistant.
(d) Vessel Traffic Supervisor.
(e) Mooring Master.
(f) Assistant Mooring Master.

§ 150.204 Definitions.

As used in this subpart:

(a) *License* means a Coast Guard license issued under 46 CFR part 10; and

(b) *Licensee* means the licensee of a deepwater port.

§ 150.205 Port Superintendent.

No person may serve, and the licensee may not use the services of a person, as a Port Superintendent at a deepwater port unless:

(a) That person has enough experience at an oil transfer facility to enable the licensee to determine that that person is capable of managing the deepwater port;

(b) The licensee determines that that person knows:

(1) The hazards of each product to be transferred; and

(2) The port operating procedures described in the Operations Manual; and

(c) The licensee designates that person as Port Superintendent and advises the Captain of the Port in writing of that designation.

§ 150.207 Cargo Transfer Supervisor.

No person may serve, and the licensee may not use the services of a person, as a Cargo Transfer Supervisor at a deepwater port unless:

(a) That person has enough experience in operating oil transfer equipment to enable the licensee to determine that that person is capable of operating the oil transfer equipment of the deepwater port;

(b) That person has:

(1) Had continuous employment for at least one year as supervisor at an oil transfer facility in charge of offloading tank vessels of 70,000 deadweight tons or larger;

(2) Supervised at least 25 cargo transfer evolutions from tankers of 70,000 deadweight tons or larger; or

(3) Served in a training capacity for Cargo Transfer Supervisor at a United States deepwater port for at least one year;

(c) The licensee determines that that person knows:

(1) The rules in Subpart D of this part;

(2) The oil transfer procedures and transfer control systems, in general, of tankers serviced at the facility;

(3) The special handling characteristics of each product to be transferred; and

(4) The procedures described in the Operations Manual for:

(i) Oil transfer;

(ii) Spill prevention, containment, and cleanup;

(iii) Accidents and emergencies;

(iv) Voice radiotelecommunications; and

(d) The licensee designates that person as Cargo Transfer Supervisor and advises the Captain of the Port in writing of that designation.

[CGD 75–002, 40 FR 52572, Nov. 10, 1975; 40 FR 58143, 58144, Dec. 15, 1975]

§ 150.209 Vessel Traffic Supervisor.

No person may serve, and the licensee may not use the services of a

person, as a Vessel Traffic Supervisor at a deepwater port unless:

(a) That person presents evidence of:

(1) Having performed for one year within the last five years in a capacity requiring radar plotting and analysis of vessel movement; or

(2) Satisfactory completion of a marine radar operators school acceptable to the Commandant;

(b) The licensee determines that that person knows:

(1) The procedures for utilizing the port's radar equipment; and

(2) The procedures described in the Operations Manual for:

(i) Vessel control; and

(ii) Voice radiotelecommunications; and

(c) The licensee designates that person as Vessel Traffic Supervisor and advises the Captain of the Port in writing of that designation.

§ 150.211 Mooring Master.

No person may serve, and the licensee may not use the services of a person, as a Mooring Master at a deepwater port unless:

(a) That person holds a current United States Coast Guard issued license as:

(1) Master of ocean steam or motor vessels of any gross tons, endorsed as radar observer, and has one year experience as:

(i) Master on tankers of 70,000 DWT or larger and satisfactory completion of a very large crude carrier (VLCC) shiphandling course acceptable to the Commandant; or

(ii) A Mooring Master at any deepwater port servicing tankers of 70,000 DWT or larger; or

(2) Master of ocean steam or motor vessels of limited tonnage, endorsed as radar observer, and endorsed as first-class pilot of vessels of any gross tons for at least one port in the area of the deepwater port, and has one year experience:

(i) Piloting ocean going vessels, including tankers of 70,000 DWT or larger; or

(ii) As assistant mooring master at the facility and satisfactory completion of a very large crude carrier (VLCC) shiphandling course acceptable to the Commandant;

(b) The licensee determines that the person knows the procedures described in the Operations Manual for:

(1) Vessel control;

(2) Vessel responsibilities;

(3) Spill prevention, containment, and cleanup;

(4) Accidents and emergencies; and

(5) Voice radiotelecommunications;

(c) The licensee designates that person as Mooring Master and advises the Captain of the Port, in writing, of the designation; and

(d) In addition to the foregoing requirements, after two years of operation of the facility, the licensee shall require new applicants for Mooring Master to have observed 20 mooring evolutions at that facility.

§ 150.213 Cargo Transfer Assistant.

No person may serve, and the licensee may not use the services of a person, as a Cargo Transfer Assistant at a deepwater port unless:

(a) That person presents evidence that he has one year experience, or performed 15 cargo transfer evolutions at an oil transfer facility servicing tankers of 70,000 deadweight tons or larger in a capacity involving connection and disconnection of the tankers to a single point mooring floating hose string;

(b) The licensee determines that that person knows:

(1) The rules in subpart D of this part;

(2) The oil transfer procedures and transfer control systems, in general, of tankers serviced at the port;

(3) The special handling characteristics of each product to be transferred;

(4) The procedures described in the Operations Manual for:

(i) Oil transfer;

(ii) Spill prevention, containment, and cleanup;

(iii) Accidents and emergencies; and

(iv) Voice radiotelecommunications; and

(c) The licensee designates that person as Cargo Transfer Assistant and retains written evidence of that designation at the deepwater port.

§ 150.215 Assistant Mooring Master.

No person may serve, and the licensee may not use the services of a

person, as an Assistant Mooring Master at a deepwater port unless:

(a) That person holds a current United States Coast Guard issued license as:

(1) Master of ocean steam or motor vessels of any gross tons, endorsed as radar observer, and has six months experience as master or chief mate on tankers of 70,000 DWT or larger; or

(2) Master of ocean steam or motor vessels of limited tons, endorsed as radar observer, and endorsed as first-class pilot of vessels of any gross tons for at least one port in the area of the deepwater port;

(b) The licensee determines that that person knows the procedures described in the Operations Manual for:

(1) Vessel control;

(2) Vessel responsibilities;

(3) Spill prevention, containment, and cleanup;

(4) Accidents and emergencies; and

(5) Voice radiotelecommunications; and

(c) The licensee designates that person as Assistant Mooring Master and advises the Captain of the Port, in writing, of the designation.

§ 150.217 Limitation on service.

No person may perform in more than one of the following capacities at any one time:

(a) Port Superintendent.

(b) Cargo Transfer Supervisor.

(c) Cargo Transfer Assistant.

(d) Vessel Traffic Supervisor.

(e) Mooring Master.

(f) Assistant Mooring Master.

Subpart C—Vessel Navigation

AUTHORITY: Sec. 10(a)(b)(d), 88 Stat. 2137–38 (33 U.S.C. 1509(a)(b)(d)); sec. 4, 92 Stat. 1473–74 (33 U.S.C 1223); 49 CFR 1.46.

SOURCE: CGD 76–096, 45 FR 85647, Dec. 29, 1980, unless otherwise noted.

§ 150.301 Applicability.

This subpart prescribes rules that:

(a) Apply to the navigation of all vessels at or near a deepwater port; and

(b) Describe vessel activities permitted and prohibited in a deepwater port safety zone.

NOTE. Appendix A to this part describes the designated boundaries of U.S. deepwater port safety zones. Included within the safety zones are specific areas to be avoided, anchorages, and other ship's routing measures associated with particular safety zones. (Shipping safety fairways associated with deepwater ports are described in Part 166 of this Title.)

[CGD 76–096, 45 FR 85647, Dec. 29, 1980, as amended by CGD 85–044, 50 FR 26990, July 1, 1985]

§ 150.303 Definitions.

Support vessel means a tug, linehandling boat, crewboat, workboat, supply vessel, bunkering vessel, barge, or other similar vessel working for a licensee in connection with the operation of a deepwater port or cleared by a licensee to service a tanker calling at a deepwater port.

Tanker means a vessel that calls at a deepwater port to load or unload oil at a SPM.

§ 150.305 Ships' routing measures.

No licensee may operate a deepwater port unless the port has such ships' routing measures as prescribed or approved by the Coast Guard to provide for safe navigation at or near the deepwater port.

§ 150.307 Radar surveillance.

The Vessel Traffic Supervisor shall maintain radar surveillance of the safety zone whenever:

(a) A tanker is proceeding to the safety zone after submitting the report required in § 150.335; or

(b) A tanker or support vessel is underway in the safety zone; or

(c) A vessel other than a tanker or support vessel is about to enter or is underway in the safety zone.

§ 150.309 Advisories to tankers.

(a) The Vessel Traffic Supervisor shall advise the master of each tanker underway in the safety zone of the tanker's position by range and bearing from the PPC at intervals not to exceed 10 minutes.

(b) Whenever the Vessel Traffic Supervisor determines that a vessel may potentially interfere with the movement of a tanker in the safety zone, the Vessel Traffic Supervisor shall keep the master of the tanker informed of the position and estimated course

and speed of the vessel as necessary to assist the tanker in navigation within the safety zone.

(c) Whenever a tanker enters the safety zone, the Vessel Traffic Supervisor shall advise the tanker of the position of each other vessel moored, anchored, or underway in the safety zone.

§ 150.311 Radio listening watch.

Whenever a tanker is in the safety zone, the Vessel Traffic Supervisor and the master of the tanker shall each continuously monitor the radio frequency designated in the Operation Manuals for use by tankers and support vessels underway at the port, except when transmitting on that frequency.

§ 150.313 Clearances for tankers.

(a) The Vessel Traffic Supervisor may not clear a tanker to enter the safety zone unless:

(1) Each other tanker underway in the safety zone is at least 5 miles from the tanker requesting clearance to enter the safety zone; and

(2) A Mooring Master is on board or ready to board at a position in the designated safety fairway that will permit completion of boarding before the tanker enters the safety zone.

(b) The Vessel Traffic Supervisor may not clear a tanker to moor at a SPM unless:

(1) There is a SPM berth available and the Vessel Traffic Supervisor has assigned that berth to the tanker;

(2) The visibility in the safety zone is at least two miles;

(3) All operating conditions prescribed in the Operation Manuals for mooring to a SPM have been met; and

(4) A Mooring Master and an Assistant Mooring Master are on board.

(c) The Vessel Traffic Supervisor may not clear a tanker to depart from a SPM unless the visibility in the safety zone is at least two miles and a Mooring Master is on board.

(d) No tanker may enter the safety zone or moor at or depart from a SPM, unless the master of the tanker has obtained clearance from the Vessel Traffic Supervisor, except as permitted by paragraph (e) of this section.

(e) A tanker may, in an emergency, for the protection of life or property, depart from a SPM without clearance from the Vessel Traffic Supervisor if the master advises the Vessel Traffic Supervisor of the circumstances, by radio, at the earliest possible moment.

§ 150.315 Clearances for support vessels.

(a) The Vessel Traffic Supervisor shall direct support vessel movements within the safety zone.

(b) The Vessel Traffic Supervisor may clear support vessels to enter or depart the safety zone at any point.

§ 150.317 Clearances for other vessels.

(a) When requested by the master of a vessel other than a tanker or support vessel, the Vessel Traffic Supervisor shall furnish information concerning other vessels underway or moored in the safety zone.

(b) If the Vessel Traffic Supervisor determines that a vessel other than a tanker or support vessel may be standing into danger with respect to any vessel or part of the deepwater port installation in the safety zone, the Vessel Traffic Supervisor shall attempt to inform the master of that vessel by radio or other means.

(c) Except in situations involving force majeure, the Vessel Traffic Supervisor shall not clear a vessel other than a tanker or support vessel to enter the safety zone of a deepwater port for any purpose that would interfere with the purpose of the deepwater port; endanger the safety of life, property, or the environment; or otherwise be prohibited by regulation.

§ 150.333 Advance notice of arrival.

(a) The master of a tanker bound for a deepwater port shall report the following information to the Captain of the Port and the Vessel Traffic Supervisor of the port at least 24 hours before entering the safety zone at the port:

(1) The name, gross tonnage, and draft of the tanker.

(2) The type and amount of cargo on board.

(3) Any conditions on the vessel that may impair the navigation of the vessel, such as fire, malfunctioning propulsion machinery or steering equipment, or limitations on navigational or

radiotelephone capabilities because of equipment or material malfunctions.

(4) Any leaks, structural damage, or machinery malfunctions that may impair cargo transfer operations or cause a discharge of oil.

(5) The estimated time of arrival at the deepwater port safety zone.

(b) If the information reported in paragraph (a)(3), (a)(4), or (a)(5) of this section changes at any time before entering the safety zone, or while the tanker is in the safety zone, the master of the tanker shall report the changes to the Captain of the Port and Vessel Traffic Supervisor as soon as possible.

§ 150.335 Report before entering safety zone.

The master of a tanker bound for a deepwater port shall notify the Vessel Traffic Supervisor of the port when the tanker is 20 miles from the entrance to the safety zone.

§ 150.337 Navigation of tankers in the safety zone.

(a) A tanker must not enter or depart a safety zone except via a designated safety fairway, unless under force majeure.

(b) A tanker must not anchor in the safety zone except in a designated anchorage area unless under force majeure.

(c) A tanker underway in a safety zone must keep at least 5 miles behind any other tanker underway ahead of it in the safety zone.

(d) A tanker must not operate, anchor, or be moored in any area of the safety zone in which the net underkeel clearance would be less than 5 feet.

§ 150.338 Navigation of support vessels in the safety zone.

(a) A support vessel must not enter or move within the safety zone unless the movement is cleared by the Vessel Traffic Supervisor.

(b) A support vessel must not anchor in the safety zone, except in an anchorage area or for support vessel maintenance operations cleared by the Vessel Traffic Supervisor.

§ 150.339 Navigation of other vessels in the safety zone.

Vessels other than tankers or support vessels should not enter the safety zone of a deepwater port unless clearance has been obtained from the Vessel Traffic Supervisor.

§ 150.341 Mooring Master.

A tanker must not be underway in the safety zone unless a Mooring Master is on board.

NOTE: The Mooring Master advises the master of the tanker on operational and ship control matters that are peculiar to the specific deepwater port, such as navigational aids, depth and current characteristics of the manuevering area, mooring equipment and procedures, and the port's vessel traffic control procedures.

§ 150.342 Assistant Mooring Master.

A tanker must not moor at a SPM unless an Assistant Mooring Master is on board.

NOTE: The Assistant Mooring Master is stationed on the forecastle of the tanker during mooring operations to assist the Mooring Master by reporting position approach data relative to the SPM and to advise the tanker personnel in handling of mooring equipment peculiar to the deepwater port.

§ 150.345 Regulated vessel activities.

(a) Vessel activities permitted and prohibited at deepwater ports, controls on those activities, and the specific safety zone areas in which the controls apply are listed in Table 150.345(a).

TABLE 150.345(A)—REGULATED VESSEL ACTIVITIES AT DEEPWATER PORTS

Regulated vessel activities	Safety zone		
	Areas to be avoided around each PPC and SPM [1]	Anchorage area	Remaining portion of safety zone
Tankers calling at port	C	C	C
Support vessel movements	C	C	C
Transit by vessels other than tankers or support vessels	N	P	P
Mooring to SPM by vessels other than tankers or support vessels	F	.....	
Anchoring by vessels other than tankers or support vessels	N	F or P	N

TABLE 150.345(A)—REGULATED VESSEL ACTIVITIES AT DEEPWATER PORTS—Continued

Regulated vessel activities	Safety zone		
	Areas to be avoided around each PPC and SPM [1]	Anchorage area	Remaining portion of safety zone
Fishing, including bottom trawl (shrimping)	N	P	P
Mobile drilling operations of erection of structures [2]	N	N	N
Lightering/transshipment [3]	N	N	N

[1] The radius of areas to be avoided around each PPC is 600 meters and around each SPM is 500 meters.
[2] Not part of Port Installation.
[3] Exception, 33 CFR 150.423(e).

NOTE: The person in charge of any vessel planning to enter a safety zone should contact the port Vessel Traffic Supervisor on Ch. 10 VHF–FM before entry and comply with that person's instructions.

Key to regulated activities: F—Force majeure. N—Not permitted. C—Tankers calling at port and support vessel movements: Permitted when cleared by vessel traffic supervisor. P—Vessels other than tankers or support vessels: Permitted when not in immediate area in tanker, clearance by vessel traffic supervisor required. Communications with vessel traffic supervisor required. For transiting foreign flag vessels, the requirement for clearance to enter the safety zone is advisory in nature.

(b) A deepwater port licensee shall obtain the permission of the Captain of the Port having jurisdiction over that licensee's port before allowing any vessel activity at the port which is not listed in Table 150.345(a) or otherwise provided for in this subpart.

Subpart D—Oil Transfer Operations

§ 150.400 Applicability.

This subpart prescribes rules that apply to the transfer of oil at a deepwater port.

§ 150.403 Definitions.

As used in this subpart:

Hose string, both floating and float/sink type, means that portion of an SPM–OTS consisting of flexible hose which connects the vessel's manifold to the SPM.

OTS means an oil transfer system of a deepwater port and includes the SPM–OTS and the undersea pipeline running from the PLEM to the onshore terminal.

PLEM means pipeline and manifold at the SPM.

Single Point Mooring (SPM) means an offshore berth which provides a link between the undersea pipeline and a moored vessel for the transfer of oil and to which the vessel can be secured and can weathervane during the oil transfer.

SPM–OTS means that portion of an OTS from the PLEM to the end of the hose string that connects to the manifold on the vessel.

§ 150.405 Periodic tests and inspections: OTS components.

No person may transfer oil through an OTS at a deepwater port unless:

(a) The SPM–OTS of the OTS has been tested and inspected as required for maintenance of class in accordance with the Rules for Building and Classing Single Point Moorings published by the American Bureau of Shipping;

(b) Each oil transfer hose in the SPM–OTS of the OTS in which the maximum pressure rating of the manufacturer has been exceeded, except when exceeded for testing required by this section, has, since the pressure was exceeded, been:

(1) Removed;

(2) Hydrostatically tested to 1.5 times its maximum working pressure; and

(3) Visually examined externally and internally for evidence of leakage, loose covers, kinks, bulges, soft spots, and gouges, cuts, or slashes that penetrate the hose reinforcement;

(c) Within the 23 months immediately preceding the month during which oil transfer operations are to be conducted, each submarine hose in the SPM–OTS of the OTS has been removed from the ends of each submarine coupling, surfaced, and visually examined externally and internally for evidence of flaws as described in paragraph (b)(3) of this section and hydrostatically tested to 1.5 times its maximum working pressure; and

(d) Each submarine hose in the SPM–OTS of that OTS has been visually examined in place for evidence of external flaws as described in paragraph (b)(3) of this section since the last time sea conditions at the deepwater port required shutdown of oil transfer operations.

§ 150.407 Periodic tests and inspections: discharge containment equipment.

No person may transfer oil at a deepwater port unless the discharge containment equipment required by Part 149 of this chapter is tested and inspected as follows:

(a) Within the five months immediately preceding the month during which oil transfer operations are to be conducted at a deepwater port, a visual examination must have been performed to determine whether there existed any conditions that might impair the effectiveness of the equipment in performing its intended function. This visual examination must include the condition of such items as fabric and fabric coatings, seams and bonding points, metal hardware parts, shackles, fittings, towing and other lines, cables, flotation devices, inflation mechanisms, and any other components integral to the equipment.

(b) Within the 11 months immediately preceding the month during which oil transfer operations are to be conducted at a deepwater port, representative pieces or sections of the containment equipment must:

(1) Have been deployed under simulated discharge conditions and the integrity of equipment strength members, containment skirt, flotation devices, and any other design performance factors of the equipment tested; or

(2) Have been deployed under actual discharge conditions.

§ 150.409 Periodic tests and inspections: removal material and equipment.

No person may transfer oil at a deepwater port unless the removal material and equipment required by Part 149 of this chapter is tested and inspected as follows:

(a) Within the two months immediately preceding the month during which oil transfer operations are to be conducted at a deepwater port, any machinery, pumps, hydraulic parts, and other operating features of removal equipment must have been visually examined and operated in accordance with the instructions of the manufacturer.

(b) Within the 11 months immediately preceding the month during which oil transfer operations are to be conducted at a deepwater port, the removal equipment must have been tested in conjunction with the containment equipment deployment required by § 150.407(b).

§ 150.411 Repair or replacement of equipment.

(a) Whenever any component of a deepwater port that affects the safety or integrity of the oil transfer operation is found to be inoperative or otherwise defective, the licensee shall replace or repair the component before further oil transfer operations are undertaken using the affected OTS. The repaired or replaced component must meet or exceed the original specifications.

(b) Whenever an item of discharge containment and removal material or equipment required by § 149.319 of this chapter is found to be inoperative or otherwise defective, the licensee shall replace or repair the item before further oil transfer operations are undertaken. The repaired or replaced item must meet or exceed the original specifications.

§ 150.413 Requirements for oil transfer.

No person may transfer oil through an OTS unless:

(a) Before connecting the hose string to the vessel manifold at the start of each oil transfer operation, it is determined by in-place visual examination that the hose string in use for that transfer operation has no leakage, loose covers, kinks, bulges, soft spots, and no gouges, cuts, or slashes that penetrate the hose reinforcement;

(b) During each oil transfer operation, it is determined by visual examination that the hose string in use for that transfer operation has no leakage;

(c) The vessel's mooring attachment to the SPM is strong enough to hold in all expected conditions of surge, current, and weather;

(d) Oil transfer hoses are long enough to allow the vessel to move to the limits of its mooring attachment to the SPM without placing strain on the hoses;

(e) Each oil transfer hose is supported in a manner that prevents strain on its coupling;

(f) Each part of the OTS necessary to allow the flow of oil is lined up for the transfer;

(g) Each part of the OTS not necessary for the transfer operation is securely blanked or shut off;

(h) Except when used to receive or discharge ballast, each overboard discharge or sea suction valve that is connected to the vessel's oil transfer, ballast, or cargo tank systems is sealed, lashed, or locked in the closed position;

(i) Each connection in the OTS meets the requirements of §150.415;

(j) The discharge containment and removal material and equipment required by §149.319 of this chapter is in place;

(k) Each scupper and overboard drain on the vessel is closed;

(l) Any continuing loss of oil from the coupling at the vessel manifold does not overflow the drip pan under the manifold;

(m) The communications equipment required by §149.317 of this chapter is operative for the transfer operation;

(n) The emergency means of shutdown required by Part 149 of this chapter is in position and operative;

(o) The Cargo Transfer Supervisor, Cargo Transfer Assistant, and any other designated personnel are on duty and present to conduct the transfer operations in accordance with the Operations Manual and with the oil transfer procedures that apply to the vessel during the transfer operation;

(p) The vessel's officer in charge of cargo transfer and the Cargo Transfer Assistant have held a conference and each understands the following details of the transfer operations:

(1) The identity of the product to be transferred.

(2) The sequence of transfer operations.

(3) The transfer rate.

(4) The name or title and location of each person participating in the transfer operation.

(5) Particulars of the transferring and receiving systems.

(6) Critical stages of the transfer operation.

(7) Federal regulations that apply to the transfer of oil.

(8) Emergency procedures.

(9) Discharge containment procedures.

(10) Discharge reporting procedures.

(11) Watch or shift arrangement.

(12) Transfer shutdown procedures;

(q) The vessel's officer in charge of cargo transfer and the Cargo Transfer Assistant agree to begin the transfer operation;

(r) Flame screens are structurally sound and securely fastened in place in all cargo tank vents and ullage holes on the vessel; and

(s) The declaration of inspection required by §150.417 is executed.

§150.415 Requirements for connections.

(a) The licensee shall provide suitable adaptors, to allow connection of the hose string to a vessel manifold, that meet any one of the following flange standards:

(1) American National Standards Institute (ANSI).

(2) British Standard (BS).

(3) German Standard (DIN).

(4) Japanese Industrial Standard (JIS).

(5) Universal Metric Standard.

(b) Each temporary connection between the hose string and a vessel manifold must:

(1) Be made using either:

(i) A bolted coupling; or

(ii) A quick-connect coupling approved under §156.130(c)(2) of this chapter;

(2) Have suitable materials in joints and couplings to make a tight seal;

(3) If using an American National Standards Institute (ANSI) standard bolted flange coupling, have a bolt in

at least every other hole of the coupling and in no case less than four bolts;

(4) If using a bolted coupling other than an ANSI standard bolted flange coupling, have a bolt in each hole of the coupling;

(5) Have bolts in each bolted coupling that are all:

(i) The same size;

(ii) Tightened so as to uniformly distribute the load around the coupling; and

(iii) Free of any signs of strain, elongation or deterioration; and

(6) Be made and broken in the presence of and under the direct supervision of the Cargo Transfer Assistant.

§ 150.417 Declaration of inspection.

(a) No person may transfer oil at a deepwater port unless a declaration of inspection has been executed before the start of each oil transfer operation by the Cargo Transfer Assistant and the vessel's officer in charge of cargo transfer.

(b) The declaration of inspection required by paragraph (a) of this section may be in any form but must contain:

(1) The name of the tanker and berth to which moored;

(2) The date the oil transfer operation will start;

(3) Certification by the Cargo Transfer Assistant and the vessel's officer in charge of cargo transfer that the requirements for oil transfer specified in § 150.413, and the pre-transfer procedures described in the Operations Manual, have been followed; and

(4) The signatures of the Cargo Transfer Assistant and the vessel's officer in charge of cargo transfer.

§ 150.419 Stopping transfer operations.

(a) Before stopping the flow of oil during an offloading operation at a deepwater port, the Cargo Transfer Supervisor shall advise the vessel's officer in charge of oil transfer of the intent to do so.

(b) Before stopping the flow of oil during an onloading operation at a deepwater port, the vessel's officer in charge of oil transfer shall advise the Cargo Transfer Supervisor of the intent to do so.

(c) Before disconnecting the hose string from the vessel manifold, the Cargo Transfer Assistant shall ensure that the shut-off valve described in § 149.307 of this chapter is secured in the closed position.

(d) Before returning the hose string to the water after disconnection, the Cargo Transfer Assistant shall ensure that the blank flange described in § 149.307 of this chapter is secured in place and has:

(1) Suitable material in the coupling to make a tight seal;

(2) A bolt in each hole of the coupling; and

(3) Bolts in the coupling that are all:

(i) The same size;

(ii) Tightened so as to uniformly distribute the load around the coupling; and

(iii) Free of any signs of strain, elongation, or deterioration.

§ 150.421 Displacement of oil in an SPM–OTS with water.

The Port Superintendent shall ensure that the oil in an SPM–OTS is displaced with water, and the valve at the PLEM closed, whenever:

(a) A storm warning has been received forecasting weather conditions that will exceed the design operating criteria listed in the Operations Manual for the SPM–OTS;

(b) A vessel is about to depart the SPM because of storm conditions; or

(c) The SPM is not scheduled for use in an oil transfer operation within the next 7 days.

§ 150.423 Limitations.

No person may transfer oil at a deepwater port:

(a) Unless a Port Superintendent is on duty at the port;

(b) During a severe electrical storm in the vicinity of the deepwater port;

(c) During a fire at the deepwater port, receiving terminal on shore, or aboard a vessel berthed at the deepwater port, unless it is determined by the Port Superintendent that an oil transfer should be resumed as a safety measure;

(d) Unless there are personnel and equipment at the port, not presently engaged in discharge containment and

removal operations, sufficient to contain and remove the discharges specified in §149.319(a);

(e) By lighterage, except in bunkering operations, unless otherwise authorized by the Captain of the Port; or

(f) Unless the weather conditions at the port meet the minimum operating conditions prescribed in the Operations Manual for transferring oil at the port.

§150.425 Suspension of oil transfer operations.

(a) The Captain of the Port may order the licensee to suspend oil transfer operations if the Captain of the Port finds that there is a condition requiring immediate action to prevent the discharge or threat of discharge of oil or to protect the safety of life and property.

(b) An order of suspension may be made effective immediately.

(c) The order of suspension states each condition requiring immediate action.

(d) The licensee may petition the District Commander, in writing or in any manner if the order of suspension is effective immediately, to reconsider the order of suspension. The decision of the District Commander is final agency action.

[CGD 75–002, 40 FR 52572, Nov. 10, 1975; 40 FR 58144, Dec. 15, 1975]

Subpart E—Operations

§150.500 Applicability.

The rules in this subpart apply to operations at a deepwater port.

§150.503 Maintenance of equipment.

(a) The licensee shall maintain each item of equipment required under this subchapter in operative condition or shall replace it with an item in good condition.

(b) The licensee shall maintain each excess item of equipment required under this subchapter in operative condition or shall remove it from serv- ice.

§150.504 Fire main system.

The licensee may use the fire main system only for firefighting and deckwashing.

§150.505 Fire pump.

The licensee shall keep at least one of the fire pumps required by this subchapter ready for use on the fire main system at all times.

§150.507 Firehose: Connection and stowage.

(a) Except as otherwise provided in paragraph (c) of this section, the licensee shall keep at least one length of firehose with a combination nozzle connected to each fire hydrant at all times.

(b) The licensee shall stow each firehose connected to a fire hydrant on a hose rack when not in use.

(c) A firehose in an exposed location may temporarily be removed from an exposed location to protect the firehose from damage during heavy weather.

(d) If the edge of a platform deck is in an exposed location, the licensee shall keep enough lengths of fire hose connected to the hydrant nearest the edge to allow 10 feet of hose, when pressurized, to curve over the edge.

§150.508 Lifesaving equipment.

(a) The licensee shall stow each inflatable life raft required by §149.521 of this subchapter as near as practicable to launching equipment for the life raft.

(b) The licensee shall test lifeboat launching equipment required by §149.524 of this subchapter immediately after installation in accordance with 46 CFR 94.35–5.

§150.509 Use of personal protection equipment.

(a) When any person is in a work area, the licensee shall ensure that such person wears:

(1) Safety shoes that meet the specifications prescribed by the American National Standard Institute (ANSI) Requirements for Men's Safety-Toe Footware, Z41.1; and

(2) Protective hats that meet the specifications prescribed by the ANSI Safety Requirements for Industrial Head Protection, Z89.1.

(b) When an eye hazard from flying particles or heavy dust exists, the licensee shall ensure that each person in the area of the hazard is wearing eye protection equipment that meets the

specifications prescribed by the ANSI Practice for Occupational and Educational Eye and Face Protection, Z87.1.

(c) When hazardous work is being performed, the licensee shall ensure that any person who wears corrective eye glasses wear eye protection equipment that can be worn over eye glasses, or prescription ground safety lenses that meet the specifications prescribed by the ANSI Practice for Occupational and Educational Eye and Face Protection, Z87.1, if these lenses provide protection against the hazard involved.

(d) When handling hazardous materials the licensee shall ensure that all personnel in the area are wearing suitable protective clothing and equipment.

(e) When any person is exposed to combinations of sound levels and durations exceeding those listed in Table 150.509(e) the licensee shall ensure that the person is wearing ear protection equipment that reduces sound levels to or below the listed levels.

(f) When any person is working over or near the water, the licensee shall ensure that the person wears either a unicellular plastic foam work vest that meets the requirements of 46 CFR 160.053 or a life preserver that meets the requirements of 46 CFR 160.002, 160.005, or 160.055.

TABLE 150.509 MAXIMUM PERMISSIBLE NOISE EXPOSURES [1]

Duration per day/hours	Sound level [2] dBA slow response
8	90
6	92
4	95
3	97
2	100
1½	102
1	105
½	110
¼	115

[1] When the daily noise exposure is composed of two or more periods of noise exposure of different levels, their combined effect must be considered rather than the individual effect of each. If the sum of the fractions

$$\frac{(C_1}{T_1} + \frac{C_2}{T_2} + \ldots \frac{C_n)}{T_n}$$

is more than one, then, the mixed exposure exceeds the limit value. (C_n) is the total time of exposure at a specified noise level. (T_n) is the total time of exposure permitted at that level.

Exposure to impulsive or impact noise should not exceed 140 dB peak sound pressure level.

[2] Measured on the A scale of a standard sound level meter at slow response.

[CGD 75–002, 40 FR 52572, Nov. 10, 1975; 40 FR 58144, Dec. 15, 1975]

§ 150.511 Maintenance of personal protection equipment.

(a) The licensee shall clean and disinfect eye protection equipment that has been used before it is reissued.

(b) The licensee shall clean and disinfect protective hats that have been worn before they are reissued.

§ 150.513 Sanitation.

The licensee shall ensure that garbage is covered and that no person is working in the vicinity of uncovered garbage or of overboard discharges from sanitary lines that are not protected by a baffle or splash boards.

§ 150.515 Refueling for aircraft.

If the PPC is not equipped with a permanent fueling facility for aircraft, no person may fuel or cause or authorize the fueling of aircraft unless he has received the permission of the Captain of the Port.

§ 150.516 Aircraft operations.

The licensee shall ensure that appropriately clothed and sufficiently qualified fire fighting and rescue personnel to man equipment and effect a rescue are present during aircraft operations.

§ 150.517 Station bill.

(a) The licensee shall post copies of a station bill on each PPC.

(b) The licensee shall designate in writing on the station bill, by title and in order of succession, each person on the PPC who is a person in charge of the PPC for purposes of supervision in an emergency.

(c) The station bill must set forth:

(1) The special duties and duty stations of each person, by name, on the PPC for each emergency listed in the Operations Manual that involves the use or application of equipment required by Part 149 of this chapter; and

(2) The signals for calling persons to their emergency stations and for abandoning the PPC.

§150.519 Emergency drills.

The licensee shall conduct each emergency drill specified in the Operations Manual at least once every 30 days.

§150.521 Housekeeping.

(a) The licensee shall keep walking and working areas clear of all loose hazards that could cause tripping or stumbling.

(b) The licensee shall store portable equipment when it is not in use.

(c) The licensee shall eliminate slippery conditions on the platform as soon as practicable.

(d) No person may suspend a portable light by its cord unless the means of attachment of the cord to the light prevents the light from being suspended by the electrical connections.

(e) The licensee shall keep each area near a lifeboat, inflatable life raft, or means of escape described in §§149.421 and 149.423 of this chapter clear of obstructions that would interfere with immediate use of the lifeboat, life raft, or means of escape.

§150.523 Illumination.

(a) The licensee shall illuminate each walking and working area.

(b) No person may enter any dark place that does not have installed illumination unless he has a flashlight or other suitable portable light.

(c) No person may use matches or open flame lights as illumination.

§150.525 Emergency Medical Technician.

The licensee shall ensure that at least one person who holds a certificate of completion of the Department of Transportation, National Highway Traffic Safety Administration Basic Training Course (81 hours), from a state or from the National Registry of Emergency Medical Technicians, is on the PPC at all times.

§150.527 First aid station.

(a) The licensee shall ensure each first aid station on a PPC has enough medical supplies and equipment for the Emergency Medical Technician to provide emergency medical care.

(b) The first aid station may not be used for any purpose that prevents its immediate use as a first aid station.

Subpart F—Aids to Navigation at Deepwater Ports

§150.601 Applicability.

The rules in this subpart apply to the operation of aids to navigation at a deepwater port.

§150.603 Applicability of other regulations.

Section 66.01–20 of this chapter also applies to aids to navigation at a deepwater port.

§150.605 Aids to navigation: power supply.

The licensee shall maintain:

(a) Voltage at every operating lamp of each light at or above the operating voltage listed on the light; and

(b) The input power to the fog signal at or above the minimum input power listed on the fog signal.

§150.607 Lights.

(a) The licensee shall display each light required in Part 149 of this subchapter between sunset and sunrise local time.

(b) During construction of a platform or SPM, the licensee shall mark the structure with at least one of the following:

(1) The obstruction lights required in Part 149 of this chapter for the structure.

(2) The fixed lights of a vessel attending the structure.

(3) General illumination lights on the structure that meet or exceed the intensity requirements for the obstruction lights required in Part 149 of this subchapter for the structure.

(c) The licensee shall ensure that each light using a lens is operated with the light source at the focal point of the lens as determined by the means required in §149.724 of this subchapter.

(d) The licensee shall ensure that the focal plane of each platform obstruction light when operated, and of the rotating lighted beacon when operated, is always coincident with the horizontal plane passing through the light source.

§ 150.611 Fog signals.

(a) The licensee shall operate the fog signal on each PPC whenever the visibility in any horizontal direction from the structure is less than 5 miles.

(b) During construction of a platform, compliance with paragraph (a) of this section is not required if the PPC is attended by a vessel moored alongside the platform and the vessel sounds a 2 second whistle blast every 20 seconds whenever the visibility in any horizontal direction from the vessel is less than 5 miles.

Subpart G—Reports and Records

§ 150.701 Applicability.

This subpart prescribes reports to be submitted by the licensee and records and other information to be maintained by the licensee.

REPORTS

§ 150.703 Maintenance of ABS classification.

Whenever the licensee submits a report to the American Bureau of Shipping (ABS) that is required for maintenance of SPM class in accordance with ABS Rules for Building and Classing Single Point Moorings, he shall submit a copy of the report to the Commandant, U.S. Coast Guard.

§ 150.705 Aid to navigation discrepancy.

The licensee shall report promptly to the District Commander, by the fastest means of communications available, any discrepancy affecting the proper operation or characteristics of any aid to navigation at the deepwater port, whenever a discrepancy exists. Correction of the discrepancy shall also be reported promptly. The initial discrepancy report must include:

(a) Name or designation of aid;

(b) Location of aid;

(c) Nature of discrepancy; and

(d) Estimated time of correction.

§ 150.707 Oil throughput report.

(a) Each deepwater port licensee shall mail or deliver to the Administrator of the Deepwater Port Liability Fund, at the address listed in § 137.105 of this chapter, on a monthly basis, beginning the fifteenth day of the month immediately following the commencement of oil transfer operations, and the fifteenth of each month thereafter, a report on the oil throughput of the deepwater port.

(b) The oil throughput report required by paragraph (a) of this section may be submitted in any format but must contain the volume of oil cargo, measured in barrels, loaded or unloaded at the deepwater port during the previous month.

(Secs. 10(a), 18(j)(1), 88 Stat. 2137, 2144 (33 U.S.C. 1509(a), 1517(j)(1)); 49 CFR 1.46)

[CGD 79–158, 47 FR 27488, June 24, 1982]

§ 150.711 Casualty or accident.

(a) The licensee shall submit to the Officer-in-Charge, Marine Inspection, a report of casualty or accident whenever any of the following occur:

(1) Any component of a deepwater port which is hit by a vessel and total damage to all property is in excess of $25,000. Damage cost includes the cost of labor and material to restore the property to the service condition which existed prior to the casualty, but does not include the cost of salvage, cleaning, gas freeing, drydocking or demurrage.

(2) Damage to the deepwater port in excess of $25,000.

(3) Material damage affecting the usefulness of lifesaving or fire fighting equipment.

(4) Loss of life.

(5) Injury causing any person to remain incapacitated for more than 72 hours, arising from or directly connected with the use or employment of any emergency equipment described in Part 149 of this chapter.

(6) Loss of life or injury causing any person to be incapacitated for a period in excess of 72 hours as a result of diving using underwater breathing apparatus.

(b) The deepwater port casualty or accident report, written in narrative form, must contain the following information:

(1) Name, number, or other designation of the deepwater port.

(2) Names and addresses of the owner, his agent, operator and the person in charge.

(3) Nature and probable cause of the casualty or accident.

(4) Date and time the casualty or accident occurred, if known, otherwise approximately when it occurred.

(5) Details of damage, especially with respect to lifesaving and fire fighting equipment.

(6) Nature and extent of injury to any person.

(7) Names and addresses of persons involved.

(8) Other comments, especially with respect to use or need for emergency equipment.

(9) The vessel casualty reporting requirements relating to alcohol or drug involvement as specified in the vessel casualty reporting requirements of 46 CFR 4.05–12.

(c) In the investigations of casualties and accidents occurring at deepwater ports, the procedures in 46 CFR Part 4 for marine casualties apply.

[CGD 75–002, 40 FR 52572, Nov. 10, 1975, as amended by CGD 76–170a, 45 FR 77434, Nov. 24, 1980; CGD 82–069a, 50 FR 14216, Apr. 11, 1985; CDG 84–099, 52 FR 47533, Dec. 14, 1987]

§ 150.713 Sabotage or subersive activity.

The licensee shall report to the Captain of the Port any evidence of sabotage or subversive activity involving or endangering any vessel at the deepwater port, or the deepwater port, immediately, by the fastest possible means of communication upon discovery. Written confirmation must follow.

RECORDS

§ 150.751 General.

(a) The licensee shall maintain copies of all reports, records, test and inspection results, and operating data required by these rules in a manner suitable for Coast Guard inspection at the deepwater port or an adjacent onshore facility.

(b) Except as specified in §§ 150.753 through 150.759, these copies must be maintained for three years.

§ 150.753 Key personnel: Designations and qualifications.

The licensee shall retain documentation of the designation and qualifications of key port personnel for the duration of each individual's employment at the port. The documentation must include:

(a) Designations required by §§ 150.205 through 150.215; and

(b) Qualifications of personnel required by §§ 150.205 through 150.215.

§ 150.755 Port inspection records.

(a) The licensee shall maintain a record of all machinery, both fixed and portable, such as generators, cargo pumps, fire pumps, and discharge containment and removal systems. This record must contain, for each piece of machinery:

(1) Nameplate and general descriptive data;

(2) Serial number;

(3) Location and purpose; and

(4) Record of tests and inspections.

(b) The licensee shall maintain a record of all fire fighting, lifesaving, and other emergency equipment, such as fire hoses, nozzles, applicators, fire extinguishers, life rafts, life preservers, and alarm systems. This record must contain, for each piece of emergency equipment:

(1) Nameplate and general descriptive data;

(2) Serial number;

(3) Location and purpose; and

(4) Record of tests and inspections.

(c) The licensee shall retain for one year a record of each monthly emergency drill required by § 150.519. The record must contain the date, time, and signature of the person in charge at the time of the drill.

(d) The licensee shall retain for three years a record of each test and inspection performed by port personnel. The record must contain the date and results of the test or inspection and the signature of the person conducting the test or inspection. These tests and inspections include, but are not limited to, those required in §§ 150.405 through 150.409 for oil transfer systems, discharge containment equipment, and discharge removal material and equipment, and those required for maintenance of ABS Classification, as specified in the ''Rules for Building and Classing of Single Point Moorings,'' published by the American Bureau of Shipping.

§ 150.757 Oil throughput log.

The licensee shall maintain an oil throughput log, from which the report of oil throughput required by § 150.707 is prepared. Records in this log must be retained for three years, and must specify for each oil transfer operation:

(a) Vessel name, nationality, owner, and date of arrival;

(b) Country of origin of crude oil; and

(c) Total quantity in barrels of oil transferred.

§ 150.759 Declaration of inspection.

The licensee shall retain signed copies of the declaration of inspection forms required by § 150.417 for one month from date of signature.

APPENDIX A TO PART 150—DEEPWATER PORT SAFETY ZONE BOUNDARIES

I. *Purpose.* This appendix contains a general description of the deepwater port safety zone designated and developed during the license application review process for each deepwater port that has been authorized for contruction and operation off the United States coastline. Annexes show, to the nearest second of latitude and longitude, the geographical boundaries of each resultant safety zone. (Shipping safety fairways associated with the Deepwater Ports are descibed in Part 166 of this Title.)

The regulations in Subpart C of this part concerning vessel navigation and activities permitted and prohibited at U.S. deepwater ports apply only in the safety zone areas and adjacent waters and supplement the International Regulations for Preventing Collisions at Sea.

II. *Authority.* Section 10(d) of the Deepwater Port Act of 1974 (88 Stat. 2138 (33 U.S.C. 1509(d))) and Section 4(c) of the Ports and Waterways Safety Act, as amended (33 U.S.C. 1223(c)); 49 CFR 1.46.

III. *General.* Deepwater port safety zones are established to promote safety of life and property, marine environmental protection and navigational safety at any deepwater port and adjacent waters. In a deepwater port safety zone no installations, structures, or uses that are incompatible with port operations are permitted. The configuration of each designated safety zone is depicted on current editions of the navigational charts that cover the deepwater port area.

IV. *Modifications.* Safety zone boundaries are subject to modification as experience is gained in U.S. deepwaters port operations. Modifications will be made only after due notification and consideration of the views of interested persons.

V. Geographic coordinates expressed in terms of latitude or longitude, or both, are not intended for plotting on maps or charts whose referenced horizontal datum is the North American Datum of 1983 (NAD 83), unless such geographic coordinates are expressly labeled NAD 83. Geographic coordinates without the NAD 83 reference may be plotted on maps or charts referenced to NAD 83 only after application of the appropriate corrections that are published on the particular map or chart being used.

ANNEX A—LOOP, INC. DEEPWATER PORT, GULF OF MEXICO

[(a) Deepwater Port Safety Zone]

Latitude N.	Longitude W.
(1) Starting at:	
28°55′23″	90°00′37″
(2) A rhumb line to	
28°53′50″	90°04′07″
(3) Then an arc with a 4,465 meter (4,883 yard) radius centered at the port pumping platform complex (PPC),	
28°53′06″	90°01′30″
(4) to a point	
28°51′07″	90°03′06″
(5) Then a rhumb line to	
28°50′09″	90°02′24″
(6) Then a rhumb line to	
28°49′05″	89°55′54″
(7) Then a rhumb line to	
28°48′36″	89°55′00″
(8) Then a rhumb line to	
28°52′04″	89°52′42″
(9) Then a rhumb line to	
28°53′10″	89°53′42″
(10) Then a rhumb line to	
28°54′52″	89°57′00″
(11) Then a rhumb line to	
28°54′52″	89°59′36″
(12) Then an arc with a 4,465 meter (4,883 yard) radius centered again at the port PPC,	
(13) To the point of starting,	
28°55′23″	90°00′37″

(b) *Areas to be Avoided.* The seven areas within the safety zone to be avoided are as follows:

(1) The area encompassed within a circle having a 600 meter radius around the port PPC and centered at:

Latitude N.	*Longitude W.*
28°53′06″	90°01′30″

(2) The six areas encompassed within a circle having a 500 meter radius around each single point mooring (SPM) at the port and centered at:

Latitude N.	*Longitude W.*
28°54′12″	90°00′37″
28°53′16″	89°59′59″
28°52′15″	90°00′19″
28°51′45″	90°01′25″
28°52′08″	90°02′33″
28°53′07″	90°03′02″

(c) *Anchorage Area.* The area within the safety zone enclosed by rhumb lines joining points at:

Latitude N.	*Longitude W.*
28°52′21″	89°57′47″
28°54′05″	89°56′38″
28°52′04″	89°52′42″
28°50′20″	89°53′51″
28°52′21″	89°57′47″

(Sec. 10(a)(b)(d), 88 Stat. 2137–38 (33 U.S.C. 1509(a)(b)(d)); Sec. 4, 92 Stat. 1473–74 (33 U.S.C. 1223); 49 CFR 1.46)

[CGD 76–096, 45 FR 85649, Dec. 29, 1980, as amended by CGD 85–044, 50 FR 26990, July 1, 1985; CGD 86–082, 52 FR 33811, Sept. 8, 1987; CGD 93–080, 59 FR 17482, Apr. 13, 1994]

INDEX TO SUBCHAPTER NN—DEEPWATER PORTS

EDITORIAL NOTE: This listing is provided for informational purposes only. It is compiled and kept up-to-date by the Coast Guard, Department of Transportation.

Section

A

Administrative Law Judge ..... Part 148
  Assignment of administrative law judge 148.253
  Authority of the administrative law judge 148.257
  Jurisdiction of the administrative law judge 148.255
Aids to Navigation at Deepwater Ports
  Applicability 149.701, 150.601
  Applicability of other regulations 149.705, 150.603
Applications for ATON 149.707
  Fog signals 150.611
  Lights 150.607
  Power supply 150.605
Application Proceeding ..... Subpart C
  Applicability 148.203
Applications ..... Subpart B
  Changes to 148.213
  Processing 148.211
  Withdrawal 148.215
Approval or Denial of an Application ..... Subpart C
  Criteria and consideration 148.323
  Decision process 148.321
  Multiple applications 148.325
  Termination of proceeding before approval or denial 148.327
Availability of documents in the record 148.207

B

Buoys .....
  Characteristics 149.773
  Light intensity 149.775
  Number and location 149.771

C

Claims and objection 148.219
Clearances for
  Definitions 150.303
  Mooring Master 150.341
  Other vessels 150.317
  Support vessels 150.315
  Tankers 150.313
Clerk; docket; record 148.205

D

Design, construction, and equipment ..... Part 149
Designation of adjacent Coastal States 148.217

Deepwater Ports Regulations ..... Subpart F
Applicability 148.601
Coordination with States 148.605
Environmental review criteria ..... Appendix A to Part 148
Exemption criteria 148.607
Petition for exemption 148.603
Deepwater Port Safety Zone Boundaries ..... Appendix A to Part 150
Loop, Inc.; Gulf of Mexico; geographic coordinates ..... Annex A to Appendix A of Part 150
Design and Equipment
Applicability 149.201
Construction 149.206
Design standards 149.205
Emergency equipment 149.211
Engineering drawings and specifications (Fixed marine and Floating marine components) 149.203
First aid station 149.217

F

Fire Extinguishing Systems, other 149.481
Fire Fighting Equipment
Axes 149.515
Extinguishers
Landing areas with fueling facility 149.513
Landing areas with no fueling facility 149.511
Location 149.503
Marking 149.507
Portable and semiportable 149.501
Spare charges 149.505
Fire detection and alarm systems 149.491
Fire hose
Coupling 149.471
Nozzle 149.473
Rack 149.467
Size 149.469
Fire hydrants 149.457
Access 149.463
Fire hydrant and control valve shutoff valve 149.461
Outlet 149.459
Fireman's outfits 149.517
Fire pumps 149.453
Fire pump locations 149.455
Fire fighting systems for helicopter pads 149.483
Fixed fire main system for water 149.451
Fog Signal 149.779
Formal Hearings ..... Subpart C
A person not a party 148.265
Appearance and practice 148.267
Assignment of administrative law judge 148.253
Authority of the administrative law judge 148.257
Conferences 148.277
Determination to hold formal hearing; notice of 148.251
Evidence 148.289
Ex parte communications 148.259
Filing 148.273
Hearing date 148.283
Intervention 148.263

Jurisdiction of the administrative law judge 148.255
Motions 148.279
Order of procedure 148.287
Parties 148.261
Reporter; transcript; correction 148.285
Requirements for documents 148.269
Rulings referred or appealed to the Commandant 148.291
Service of document; other transmittal 148.275
Subpoenas 148.281
Subscription 148.271

G

General
ABS classification 150.121
Applicability 150.101
Deviations 150.113
Emergency deviations 150.115
Environmental monitoring 150.127
License 149.105
Licensee 150.103
Purpose 149.101

H

Helicopter .....
Fueling facilities 149.213
Operations, interference with 149.215

I

Identification of a platform and Single Point Mooring (SPM) 149.791
Informal Public Hearing ..... Subpart C
Notice of public hearing 148.231
Report of public hearing 148.235
Testimony and argument 148.233
Issuance of a License 148.403
Applicability 148.400
Consultation with adjacent coastal States 148.407
Issuance of a license 148.403

L

Lifesaving Equipment
General alarm system 149.541
Inflatable life rafts 149.523
Launching equipment for inflatable life rafts 149.525
Launching equipment for lifeboats 149.524
Lifeboats 149.522
Lifeboats and inflatable life rafts: General 149.521
Lights, portable 149.539
Litters 149.533
Markings
For personal flotation devices (PFD's) 149.537
Of general alarm system 149.543
On lifeboats, life rafts, paddles, and oars 149.535
Personal flotation devices, Type I 149.529
Public address system 149.545
Radio apparatus, portable 149.527

Ring life buoys, approved (Type IV PFD's) 149.526
Lights .....
Characteristics of obstruction lights 149.755
Chromaticity 149.727
Color 149.725
Display of information 149.729
Focus 149.724
Intensity of obstruction lights 149.757
Intensity of lights, general 149.723
Leveling 149.759
Light source 149.721
Markings for piles and pile clusters 149.793
Obstruction lights, number and location on a platform and SPM 149.751
Obstruction lights, number and location on a floating hose string 149.753
Radar beacon 149.795
Rotating lighted beason 149.797
Limits of Liability ..... Subpart G
Limits of liability 148.703
Purpose 148.701

N

National Fire Protection Association (NFPA) 149.213
Navigation of
Other vessels in the safety zone 150.339
Radar surveillance 150.307
Radio listening watch 150.311
Regulated vessel activities 150.345
Report before entering safety zone 150.335
Ship's routing measures 150.305
Support vessels in the safety zone 150.338
Tankers in the safety zone 150.337
Notification .....
To the Commandant 150.119
To the District Commander 150.117

O

Operations ..... Part 150
Aircraft operations 150.516
Aircraft, refueling for 150.515
Applicability 150.500
Emergency drills 150.519
Emergency Medical Technician 150.525
Firehose: Connection and stowage 150.507
Fire main system 150.504
Fire pump 150.505
First aid station 150.527
Housekeeping 150.521
Illumination 150.523
Lifesaving equipment 150.508
Maintenance of equipment 150.503
Maintenance of personal protection equipment 150.511
Personal protection equipment, use of 150.509
Sanitation 150.513
Station bill 150.517
Operations Manual:
Amendment 150.107

Index

Compliance with 150.109
Copies 150.106
General 150.105
Response Plans 150.129
Water depth measurements 150.125
Weather monitoring 150.127
Oil Transfer Operations
Applicability 150.400
Declaration of Inspection 150.417
Definitions 150.403
Displacement of oil in an SPM-Oil Transfer System (OTS) with water 150.421
Limitations 150.423
Periodic tests and inspections: discharge containment equipment 150.407
Periodic tests and inspections: OTS components 150.405
Periodic tests and inspections: removal material and equipment 150.409
Repair or replacement of equipment 150.411
Requirements for connections 150.415
Requirements for oil transfer 150.413
Stopping transfer operations 150.419
Suspension of oil transfer operations 150.425

P

Pollution Prevention Equipment
Applicability 149.301
Blank flange and shutoff valve 149.307
Communication equipment 149.317
Discharge containment and removal material, and equipment 149.319
Malfunction detection system 149.311
Manually operated shutoff valve 149.309
Oil transfer system alarm 149.313
Marking of oil transfer system alarm 149.315
Overflow and relief valve 149.303
Pipeline and manifold (PLEM) shutoff valve 149.305
Special requirement for onloading ports 149.321

R

Reports and Records
Aid to navigation discrepancy 150.705
Casualty or accident (46 CFR Part 4) 150.711
Declaration of Inspection 150.759
General 150.751
Key personnel: Designations and qualifications 150.753
Maintenance of ABS classification 150.703
Oil throughput log 150.757
Oil throughput report 150.707
Sabotage or subversive activity 150.713
Request by Port for determination 148.216

S

Safety Equipment
Applicability 149.401
Curbs, gutters, drains, and reservoirs 149.403
Emergency power 149.411
Equipment not required on a Pumping Platform Complex (PPC) 149.402

Means of escape from helicopter landing pad.....149.423
Means of escape from platform 149.421
Open sided deck, deck opening, catwalk, and helicopter pad protection.....149.441
Personal landings.....149.431
Site Evaluation..... Subpart E
General conditions of performance.....148.505
Notice of proposed site evaluation.....148.503
Purpose 148.501
Reports 148.507
Suspension and prohibition of activities 148.509
Personal landing illumination.....149.433
SPM's.....149.209

V

Vessel Navigation .....
Advance notice of arrival 150.333
Advisories to tankers.....150.309
Applicability.....150.301
Assistant Mooring Master 150.342

SUBCHAPTER O—POLLUTION

PART 151—VESSELS CARRYING OIL, NOXIOUS LIQUID SUBSTANCES, GARBAGE, MUNICIPAL OR COMMERCIAL WASTE, AND BALLAST WATER

Subpart A—Implementation of MARPOL 73/78 and the Protocol on Environmental Protection to the Antarctic Treaty as it Pertains to Pollution from Ships

GENERAL

Sec.
151.01 Purpose.
151.03 Applicability.
151.04 Penalties for violation.
151.05 Definitions.
151.06 Special areas.
151.07 Delegations.
151.08 Denial of entry.

OIL POLLUTION

151.09 Applicability.
151.10 Control of discharge of oil.
151.11 Exceptions for emergencies.
151.13 Special areas for Annex I of MARPOL 73/78.
151.15 Reporting requirements.
151.17 Surveys.
151.19 International Oil Pollution Prevention (IOPP) Certificates.
151.21 Ships of countries not party to MARPOL 73/78.
151.23 Inspection for compliance and enforcement.
151.25 Oil Record Book.
151.26 Shipboard oil pollution emergency plans.
151.27 Plan submission and approval.
151.28 Plan review and revision.
151.29 Foreign ships.

NOXIOUS LIQUID SUBSTANCE POLLUTION

151.30 Applicability.
151.31 Where to find requirements applying to oceangoing ships carrying Category A, B, C, and D NLS.
151.32 Special areas for the purpose of Annex II.
151.33 Certificates needed to carry Category C Oil-like NLS.
151.35 Certificates needed to carry Category D NLS and Category D Oil-like NLS.
151.37 Obtaining an Attachment for NLSs to the IOPP Certificate and obtaining an NLS Certificate.
151.39 Operating requirements: Category D NLS.
151.41 Operating requirements for oceangoing ships with IOPP Certificates: Category C and D Oil-like NLSs.
151.43 Control of discharge of NLS residues.
151.45 Reporting spills of NLS: Category A, B, C, and D.
151.47 Category D NLSs other than oil-like Category D NLSs that may be carried under this part.
151.49 Category C and D Oil-like NLSs allowed for carriage.

GARBAGE POLLUTION AND SEWAGE

151.51 Applicability.
151.53 Special areas for Annex V of MARPOL 73/78.
151.55 Recordkeeping requirements.
151.57 Waste management plans.
151.59 Placards.
151.61 Inspection for compliance and enforcement.
151.63 Shipboard control of garbage.
151.65 Reporting requirements.
151.66 Operating requirements: Discharge of garbage in the navigable waters prohibited.
151.67 Operating requirements: Discharge of plastic prohibited.
151.69 Operating requirements: Discharge of garbage outside special areas.
151.71 Operating requirements: Discharge of garbage within special areas.
151.73 Operating requirements: Discharge of garbage from fixed or floating platforms.
151.75 Grinders or comminuters.
151.77 Exceptions for emergencies.
151.79 Operating requirements: Discharge of sewage within Antarctica.

APPENDIX A TO §§ 151.51 THROUGH 151.77—SUMMARY OF GARBAGE DISCHARGE RESTRICTIONS

Subpart B—Transportation of Municipal and Commercial Waste

151.1000 Purpose.
151.1003 Applicability.
151.1006 Definitions.
151.1009 Transportation of municipal or commercial waste.
151.1012 Applying for a conditional permit.
151.1015 Issuing or denying the issuance of a conditional permit.
151.1018 Withdrawal of a conditional permit.
151.1021 Appeals.
151.1024 Display of number.

Subpart C—Ballast Water Management for Control of Nonindigenous Species in the Great Lakes and Hudson River

151.1500 Purpose.
151.1502 Applicability.

151.1504 Definitions.
151.1506 Restriction of operation.
151.1508 Revocation of clearance.
151.1510 Ballast water management.
151.1512 Vessel safety.
151.1514 Ballast water management alternatives under extraordinary conditions.
151.1516 Compliance monitoring.

Subpart D—Ballast Water Management for Control of Nonindigenous Species in waters of the United States

151.2000 What is the purpose of this subpart?
151.2005 To which vessels does this subpart apply?
151.2010 Which vessels are exempt from the mandatory requirements?
151.2015 Is a vessel in innocent passage exempt from the mandatory requirements?
151.2020 To what ballast water does this subpart apply?
151.2025 What definitions apply to this subpart?
151.2030 Who is responsible for determining when to use the safety exemption?
151.2035 What are the voluntary ballast water management guidelines?
151.2040 What are the mandatory requirements for vessels carrying ballast water into the waters of the United States after operating beyond the Exclusive Economic Zone (EEZ)?
151.2045 What are the mandatory recordkeeping requirements?
151.2050 What methods are used to monitor compliance with this subpart?
151.2055 Where are the alternate exchange zones located? [Reserved]
151.2060 What must each application for approval of an alternative compliance technology contain? [Reserved]
151.2065 What is the standard of adequate compliance determined by the ANSTF for this subpart? [Reserved]

APPENDIX TO SUBPART D OF PART 151—BALLAST WATER REPORTING FORM AND INSTRUCTIONS FOR BALLAST WATER REPORTING FORM

Subpart A—Implementation of MARPOL 73/78 and the Protocol on Environmental Protection to the Antarctic Treaty as it Pertains to Pollution from Ships

GENERAL

AUTHORITY: 33 U.S.C. 1321 and 1903; Pub. L. 104–227 (110 Stat. 3034), E.O. 12777, 3 CFR, 1991 Comp. p. 351; 49 CFR 1.46.

SOURCE: CGD 75–124a, 48 FR 45709, Oct. 6, 1983, unless otherwise noted.

§ 151.01 Purpose.

The purpose of this subpart is to implement the Act to Prevent Pollution from Ships, 1980, as amended (33 U.S.C. 1901–1911) and Annexes I, II and V of the International Convention for the Prevention of Pollution from Ships, 1973, as modified by the Protocol of 1978 relating thereto (MARPOL 73/78), done at London on February 17, 1978. This subpart also implements the Antarctic Science, Tourism, and Conservation Act of 1996, and the Protocol on Environmental Protection to the Antarctic Treaty done at Madrid on October 4, 1991.

NOTE: MARPOL 73/78 is available from the National Technical Information Service, 5285 Port Royal Road, Springfield, VA 22161. Please include reference number ''ADA 168 505'' in your request.

[CGD 88–002, 54 FR 18403, Apr. 28, 1989, as amended by CGD 88–002A, 55 FR 18582, May 2, 1990; CGD 97–015, 62 FR 18045, Apr. 14, 1997]

§ 151.03 Applicability.

This subpart applies to each ship that must comply with Annex I, II or V of MARPOL 73/78 unless otherwise indicated.

[CGD 88–002, 54 FR 18403, Apr. 28, 1989, as amended by CGD 88–002A, 55 FR 18582, May 2, 1990; CGD 97–015, 62 FR 18045, Apr. 14, 1997]

§ 151.04 Penalties for violation.

(a) A person who violates MARPOL 73/78, the Act, or the regulations of this subpart is liable for a civil penalty for each violation, as provided by 33 U.S.C. 1908(b)(1). Each day of a continuing violation constitutes a separate violation.

(b) A person who makes a false, fictitious statement or fraudulent representation in any matter in which a statement or representation is required to be made to the Coast Guard under MARPOL 73/78, the Act, or the regulations of this subpart, is liable for a civil penalty for each statement or representation, as provided by 33 U.S.C. 1908(b)(2).

(c) A person who knowingly violates MARPOL 73/78, the Act, or the regulations of this subpart commits a class D felony, as described in 18 U.S.C. 3551 *et seq.* In the discretion of the Court, an amount equal to not more than one-

half of the fine may be paid to the person giving information leading to conviction.

(d) A ship operated in violation of MARPOL 73/78, the Act, or the regulations of this subpart is liable *in rem* for any civil penalty covered by paragraph (a) or (b) of this section, or any fine covered by paragraph (c) of this section, and may be proceeded against in the United States District Court of any district in which the ship may be found.

[CGD 88–002, 54 FR 18403, Apr. 28, 1989, as amended by CGD 88–002A, 55 FR 18582, May 2, 1990; CGD 92–007, 57 FR 33261, July 27, 1992; CGD 96–052, 62 FR 16703, Apr. 8, 1997; USCG–1999–5832, 64 FR 34714, June 29, 1999]

§ 151.05 Definitions.

As used in this subpart—

Act means the Act to Prevent Pollution from Ships, as amended (33 U.S.C. 1901–1911).

Antarctica means the area south of 60 degrees south latitude.

Cargo associated wastes means all materials which have become wastes as a result of use on board a ship for cargo stowage and handling. Cargo associated wastes include, but are not limited to dunnage, shoring, pallets, lining and packing materials, plywood, paper, cardboard, wire, and steel strapping.

Clean ballast means the ballast in a tank which, since oil was last carried therein, has been so cleaned that effluent therefrom, if it were discharged from a ship that is stationary into clean calm water on a clear day would not produce visible traces of oil on the surface of the water or adjoining shorelines or cause a sludge or emulsion to be deposited beneath the surface of the water or upon adjoining shorelines. If the ballast is discharged through an oil discharge monitoring and control system approved by the government of the country under whose authority the ship is operating, evidence based on such a system, to the effect that the oil content of the effluent does not exceed 15 parts per million (ppm) is determinative that the ballast is clean.

Commandant means Commandant, U.S. Coast Guard.

Discharge means any release, however caused, from a ship and includes any escape, disposal, spilling, leaking, pumping, emitting or emptying. It does not include—

(1) Dumping within the meaning of the Convention on the Prevention of Marine Pollution by Dumping of Wastes and Other Matter, done at London on 13 November 1972; or

(2) Release of oil or oily mixtures directly arising from the exploration, exploitation and associated off-shore processing of sea-bed mineral resources.

Discharge, as defined by MARPOL 73/78 in relation to harmful substances or effluent containing such substances, means any release however caused from a ship, and includes any escape, disposal, spilling, leaking, pumping, emitting or emptying. It does not include—

(1) Dumping within the meaning of the Convention on the Prevention of Marine Pollution by Dumping of Wastes and Other Matter, done at London on November 13, 1972; or

(2) The release of harmful substances directly arising from the exploration, exploitation, and associated offshore processing of seabed mineral resources; or

(3) The release of harmful substances for purposes of legitimate scientific research relating to pollution abatement or control.

Dishwater means the liquid residue from the manual or automatic washing of dishes and cooking utensils which have been pre-cleaned to the extent that any food particles adhering to them would not normally interfere with the operation of automatic dishwashers.

Domestic wastes means all types of wastes generated in the living spaces on board a ship, except victual wastes.

Existing ship means a ship that is not a new ship.

Garbage means all kinds of victual, domestic, and operational waste, excluding fresh fish and parts thereof, generated during the normal operation of the ship and liable to be disposed of continuously or periodically, except dishwater, graywater, and those substances that are defined or listed in other Annexes to MARPOL 73/78.

Graywater means drainage from dishwasher, shower, laundry, bath, and washbasin drains and does not include

drainage from toilets, urinals, hospitals, and cargo spaces.

Great Lakes means the Great Lakes of North America and the St. Lawrence River west of a rhumb line drawn from Cap des Rosiers to West Point, Anticosti Island, and, on the north side of Anticosti Island, the meridian of longitude 63 degrees west.

Harmful substance means any substance which, if introduced into the sea, is liable to create hazards to human health, harm living resources and marine life, damage amenities, or interfere with other legitimate uses of the sea, and includes any substance subject to control by MARPOL 73/78.

High viscosity Category B NLS means any Category B NLS having a viscosity of at least 25 mPa.s at 20 °C and at least 25 mPa.s at the time it is unloaded.

High viscosity Category C NLS means any Category C NLS having a viscosity of at least 60 mPa.s at 20 °C and at least 60 mPa.s at the time it is unloaded.

High viscosity NLS includes Category A NLSs having a viscosity of at least 25 mPa.s at 20 °C and at least 25 mPa.s at the time they are unloaded, high viscosity Category B NLSs, and high viscosity Category C NLSs.

Instantaneous rate of discharge of oil content means the rate of discharge of oil in liters per hour at any instant divided by the speed of the ship in knots at the same instant.

Length means the horizontal distance between the foremost part of a ship's stem to the aftermost part of its stern, excluding fittings and attachments.

Maintenance waste means materials collected while maintaining and operating the ship, including, but not limited to, soot, machinery deposits, scraped paint, deck sweepings, wiping wastes, and rags.

Major conversion means a conversion of an existing ship—

(1) That substantially alters the dimensions or carrying capacity of the ship; or

(2) That changes the type of the ship; or

(3) The intent of which, in the opinion of the government of the country under whose authority the ship is operating, is substantially to prolong its life; or

(4) Which otherwise so alters the ship that, if it were a new ship, it would become subject to relevant provisions of MARPOL 73/78 not applicable to it as an existing ship.

MARPOL 73/78 means the International Convention for the Prevention of Pollution from Ships, 1973, as modified by the Protocol of 1978 relating thereto.

Medical waste means isolation wastes, infectious agents, human blood and blood products, pathological wastes, sharps, body parts, contaminated bedding, surgical wastes and potentially contaminated laboratory wastes, dialysis wastes, and such additional medical items as prescribed by the Administrator of the EPA by regulation.

Nearest land. The term ''from the nearest land'' means from the baseline from which the territorial sea of the territory in question is established in accordance with international law, except that, for the purposes of these regulations, ''from the nearest land'' off the north eastern coast of Australia shall mean from a line drawn from a point on the coast of Australia in—

latitude 11°00′ South, longitude 142°08′ East to a point in—latitude 10°35′ South, longitude 141°55′ East, thence to a point—latitude 10°00′ South, longitude 142°00′ East, thence to a point—latitude 9°10′ South, longitude 143°52′ East, thence to a point—latitude 9°00′ South, longitude 144°30′ East, thence to a point—latitude 13°00′ South, longitude 144°00′ East, thence to a point—latitude 15°00′ South, longitude 146°00′ East, thence to a point—latitude 18°00′ South, longitude 147°00′ East, thence to a point—latitude 21°00′ South, longitude 153°00′ East, thence to a point on the coast of Australia in latitude 24°42′ South, longitude 153°15′ East.

New ship means a ship—

(1) For which the building contract is placed after December 31, 1975; or

(2) In the absence of a building contract, the keel of which is laid or which is at a similar stage of construction after June 30, 1976; or

(3) The delivery of which is after December 31, 1979; or

(4) That has undergone a major conversion—

(i) For which the contract is placed after December 31, 1975;

(ii) In the absence of a contract, the construction work of which is begun after June 30, 1976; or

(iii) That is completed after December 31, 1979.

(5) For the purposes of §§ 151.26 through 151.28, which is delivered on or after April 4, 1993.

NLS Certificate means an International Pollution Prevention Certificate for the Carriage of Noxious Liquid Substances in Bulk issued under MARPOL 73/78.

Noxious liquid substance (NLS) means—

(1) Each substance listed in § 151.47 or § 151.49;

(2) Each substance having an ''A'', ''B'', ''C'', or ''D'' beside it's name in the column headed ''Pollution Category'' in Table 1 of 46 CFR Part 153; and

(3) Each substance that is identified as an NLS in a written permission issued under 46 CFR 153.900 (d).

Oceangoing ship means a ship that—

(1) Is operated under the authority of the United States and engages in international voyages;

(2) Is operated under the authority of the United States and is certificated for ocean service;

(3) Is operated under the authority of the United States and is certificated for coastwise service beyond three miles from land;

(4) Is operated under the authority of the United States and operates at any time seaward of the outermost boundary of the territorial sea of the United States as defined in § 2.05 of this chapter; or

(5) Is operated under the authority of a country other than the United States.

NOTE: A Canadian or U.S. ship being operated exclusively on the Great Lakes of North America or their connecting and tributary waters, or exclusively on the internal waters of the United States and Canada; is not an ''oceangoing'' ship.

Oil means petroleum in any form including crude oil, fuel oil, sludge, oil refuse, and refined products. ''Oil'' does not include animal or vegetable based oil nor does it include noxious liquid substances designated under Annex II of MARPOL 73/78.

Oil–like NLS means each cargo listed in § 151.49.

Oil tanker means a ship constructed or adapted primarily to carry oil in bulk in its cargo spaces and includes combination carriers and any ''chemical tanker'' as defined in Annex II of MARPOL 73/78 when it is carrying a cargo or part cargo of oil in bulk.

Oily mixture means a mixture with any oil content, including bilge slops, oily wastes, oil residues (sludge), oily ballast water, and washings from cargo oil tanks.

Operational waste means all cargo associated waste, maintenance waste, cargo residues, and ashes and clinkers from shipboard incinerators and coal burning boilers

Person means an individual, firm, public or private corporation, partnership, association, State, municipality, commission, political subdivision of a State, or any interstate body.

Plastic means any garbage that is solid material, that contains as an essential ingredient one or more synthetic organic high polymers, and that is formed or shaped either during the manufacture of the polymer or polymers or during fabrication into a finished product by heat or pressure or both. ''Degradable'' plastics, which are composed of combinations of degradable starches and are either (a) synthetically produced or (b) naturally produced but harvested and adapted for use, are plastics under this part. Naturally produced plastics such as crabshells and other types of shells, which appear normally in the marine environment, are not plastics under this part.

NOTE: Plastics possess material properties ranging from hard and brittle to soft and elastic. Plastics are used for a variety of marine applications including, but not limited to: food wrappings, products for personal hygiene, packaging (vaporproof barriers, bottles, containers, and liners), ship construction (fiberglass and laminated structures, siding, piping insulation, flooring, carpets, fabrics, adhesives, and electrical and electronic components), disposable eating-utensils and cups (including styrene products), bags, sheeting, floats, synthetic fishing nets, monofilament fishing line, strapping bands, hardhats, and synthetic ropes and lines.

Port means—

(1) A group of terminals that combines to act as a unit and be considered a port for the purposes of this subpart;

(2) A port authority or other organization that chooses to be considered a port for the purposes of this subpart; or

(3) A place or facility that has been specifically designated as a port by the COTP.

Prewash means a tank washing operation that meets the procedure in 46 CFR 153.1120.

Recognized Classification Society means a classification society that is a participating member of the International Association of Classification Societies (IACS).

Residues and mixtures containing NLSs (NLS residue) means—

(1) Any Category A, B, C, or D NLS cargo retained on the ship because it fails to meet consignee specifications;

(2) Any part of a Category A, B, C, or D NLS cargo remaining on the ship after the NLS is discharged to the consignee, including but not limited to puddles on the tank bottom and in sumps, clingage in the tanks, and substance remaining in the pipes; or

(3) Any material contaminated with Category A, B, C, or D NLS cargo, including but not limited to bilge slops, ballast, hose drip pan contents, and tank wash water.

Segregated ballast means the ballast water introduced into a tank that is completely separated from the cargo oil and fuel oil system and that is permanently allocated to the carriage of ballast or to the carriage of ballast or cargoes other than oil or noxious substances as variously defined in the Annexes of MARPOL 73/78.

Ship means a vessel of any type whatsoever, operating in the marine environment. This includes hydrofoils, aircushion vehicles, submersibles, floating craft whether self-propelled or not, and fixed or floating drilling rigs and other platforms.

Shipboard oil pollution emergency plan means a plan prepared, submitted, and maintained according to the provisions of §§ 151.26 through 151.28 of this subpart for United States ships or maintained according to the provisions of § 151.29(a) of this subpart for foreign ships operated under the authority of a country that is party to MARPOL 73/78 or carried on board foreign ships operated under the authority of a country that is not a party to MARPOL 73/78, while in the navigable waters of the United States, as evidence of compliance with § 151.21 of this subpart.

Solidifying NLS means a Category A, B, or C NLS that has a melting point—

(1) Greater than 0 °C but less than 15 °C and a temperature, measured under the procedure in 46 CFR 153.908(d), that is less than 5 °C above its melting point at the time it is unloaded; or

(2) 15 °C or greater and a temperature, measured under the procedure in 46 CFR 153.908(d), that is less than 10 °C above its melting point at the time it is unloaded.

Special area means a sea area, where for recognized technical reasons in relation to its oceanographical and ecological condition and to the particular character of the traffic, the adoption of special mandatory methods for the prevention of sea pollution by oil, NLSs, or garbage is required.

Terminal means an onshore facility or an offshore structure located in the navigable waters of the United States or subject to the jurisdiction of the United States and used, or intended to be used, as a port or facility for the transfer or other handling of a harmful substance.

NOTE: The Coast Guard interprets commercial fishing facilities, recreational boating facilities, and mineral and oil industry shorebases to be terminals for the purposes of Annex V of MARPOL 73/78, since these facilities normally provide wharfage and other services, including garbage handling, for ships.

U.S. inspected ships means those ship required to be inspected and certificated under 46 CFR 2.01–7.

Victual waste means any spoiled or unspoiled food waste.

[CGD 75–124a, 48 FR 45709, Oct. 6, 1983; 48 FR 54977, Dec. 8, 1983, as amended by CGD 85–010, 52 FR 7758, Mar. 12, 1987; CGD 88–002, 54 FR 18403, Apr. 28, 1989; CGD 88–002A, 55 FR 18582, May 2, 1990; CGD 88–002, 55 FR 35988, Sept. 4, 1990; CGD 88–002A, 56 FR 8880, Mar. 1, 1991; CGD 93–030, 59 FR 51338, Oct. 7, 1994; CGD 94–056, 60 FR 43377, Aug. 21, 1995; CGD 97–015, 62 FR 18045, Apr. 14, 1997]

§ 151.06 Special areas.

(a) For the purposes of this part, the navigational descriptions of the special areas are as follows:

(1) The Mediterranean Sea area means the Mediterranean Sea proper

including the gulfs and seas therein, with the boundary between the Mediterranean and the Black Sea constituted by the 41° N parallel and bounded to the west by the Straits of Gibraltar at the meridian of 5°36′ W.

(2) The Baltic Sea means the Baltic Sea proper with the Gulf of Bothnia, the Gulf of Finland, and the entrance to the Baltic Sea bounded by the parallel of the Skaw in the Skagerrak at 57°44.8′ N.

(3) The Black Sea area means the Black Sea proper with the boundary between the Mediterranean Sea and the Black Sea constituted by the parallel 41° N.

(4) The Red Sea area means the Red Sea proper including the Gulfs of Suez and Aqaba bounded at the south by the rhumb line between Ras si Ane (12°8.5′ N, 43°19.6′ E) and Husn Murad (12°40.4′ N, 43°30.2′ E).

(5) The Gulfs areas means the sea area located northwest of the rhumb line between Ras al Hadd (22°30′ N, 59°48′ E) and Ras al Fasteh (25°04′ N, 61°25′ E).

(6) The Gulf of Aden areas means the part of the Gulf of Aden between the Red Sea and the Arabian Sea bounded to the west by the rhumb line between Ras si Ane (12°28.5′ N, 43°19.6′ E) and Husn Murad (12°40.4′ N, 43°30.2′ E) and to the east by the rhumb line between Ras Asir (11°50′ N, 51°16.9′ E) and the Ras Fartak (15°35′ N, 52°13.8′ E).

(7) The Antarctic areas means the sea south of 60° south latitude.

(8) The North Sea area means the North Sea proper, including seas within the North Sea southwards of latitude 62° N and eastwards of longitude 4° W; the Skagerrak, the southern limit of which is determined east of the Skaw by latitude 57°44.8′ N; and the English Channel and its approaches eastwards of longitude 5° W.

(9) The Wider Caribbean region means the Gulf of Mexico and Caribbean Sea proper, including the bays and seas therein and that portion of the Atlantic Ocean within the boundary constituted by the 30° N parallel from Florida eastward to 77°30′ W meridian, thence a rhumb line to the intersection of 20° N parallel and 59° W meridian, thence a rhumb line to the intersection of 7°20′ N parallel and 50° W meridian, thence a rhumb line drawn southwesterly to the eastern boundary of French Guiana.

(b) Special areas for the purpose of Annex I of MARPOL 73/78 include those referenced in §151.13. Special areas for the purposes of Annex II of MARPOL 73/78 include those referenced in §151.32. Special areas for the purpose of Annex V of MARPOL 73/78 include those referenced in §151.53.

[CGD 94–056, 60 FR 43377, Aug. 21, 1995]

§151.07 Delegations.

Each Coast Guard official designated as a Captain of the Port (COTP) or Officer in Charge, Marine Inspection (OCMI) or Commanding Officer, Marine Safety Office (MSO), is delegated the authority to—

(a) Issue International Oil Pollution Prevention (IOPP) Certificates;

(b) Detain or deny entry to ships not in substantial compliance with MARPOL 73/78 or not having an IOPP Certificate or evidence of compliance with MARPOL 73/78 on board;

(c) Receive and investigate reports under §151.15; and

(d) Issue subpoenas to require the attendance of any witness and the production of documents and other evidence, in the course of investigations of potential violations of the Act to Prevent Pollution from Ships, as amended (33 U.S.C. 1901–1911), this subpart, or MARPOL 73/78.

[CGD 88–002, 54 FR 18404, Apr. 28, 1989, as amended by CGD 88–002A, 55 FR 18582, May 2, 1990]

§151.08 Denial of entry.

(a) Unless a ship is entering under force majeure, no oceangoing tanker or any other oceangoing ship of 400 gross tons or more required by §151.10 to retain oil or oily residues and mixtures on board while at sea, and no oceangoing ship carrying a Category A, B, or C NLS cargo or NLS residue in cargo tanks that are required to be prewashed under 46 CFR Part 153, may enter any port or terminal under §158.110(a) of this chapter unless the port or terminal has a Certificate of Adequacy, as defined in §158.120 of this chapter.

(b) A COTP may deny the entry of a ship to a port or terminal under § 158.110(b) if—

(1) The port or terminal does not have a Certificate of Adequacy, as required in § 158.135 of this chapter; or

(2) The port or terminal is not in compliance with the requirements of Subpart D of Part 158.

[CGD 88–002, 54 FR 18404, Apr. 28, 1989]

OIL POLLUTION

SOURCE: Sections 151.09—151.25 appear by CGD 75–124a, 48 FR 45709, Oct. 6, 1983, unless otherwise noted.

§ 151.09 Applicability.

(a) Except as provided in paragraph (b) of this section, §§ 151.09 through 151.25 apply to each ship that—

(1) Is operated under the authority of the United States and engages in international voyages;

(2) Is operated under the authority of the United States and is certificated for ocean service;

(3) Is operated under the authority of the United States and is certificated for coastwise service beyond three nautical miles from land;

(4) Is operated under the authority of the United States and operates at any time seaward of the outermost boundary of the territorial sea of the United States as defined in § 2.05–10 of this chapter; or

(5) Is operated under the authority of a country other than the United States while in the navigable waters of the United States, or while at a port or terminal under the jurisdiction of the United States.

(b) Sections 151.09 through 151.25 do not apply to—

(1) A warship, naval auxiliary, or other ship owned or operated by a country when engaged in noncommercial service;

(2) A Canadian or U.S. ship being operated exclusively on the Great Lakes of North America or their connecting and tributary waters;

(3) A Canadian or U.S. ship being operated exclusively on the internal waters of the United States and Canada; or

(4) Any other ship specifically excluded by MARPOL 73/78.

(c) Sections 151.26 through 151.28 apply to each United States oceangoing ship specified in paragraphs (a)(1) through (a)(4) of this section which is—

(1) An oil tanker of 150 gross tons and above or other ship of 400 gross tons and above; or

(2) A fixed or floating drilling rig or other platform, when not engaged in the exploration, exploitation, or associated offshore processing of seabed mineral resources.

(d) Sections 151.26 through 151.28 do not apply to—

(1) The ships specified in paragraph (b) of this section;

(2) Any barge or other ship which is constructed or operated in such a manner that no oil in any form can be carried aboard.

NOTE: The term ''internal waters'' is defined in § 2.05–20 of this chapter.

(e) Section 151.26(b)(5) applies to all vessels subject to the jurisdiction of the United States and operating in Antarctica.

[CGD 88–002, 54 FR 18404, Apr. 28, 1989, as amended by CGD 88–002A, 55 FR 18582, May 2, 1990; CGD 93–030, 59 FR 51338, Oct. 7, 1994; CGD 97–015, 62 FR 18045, Apr. 14, 1997]

§ 151.10 Control of discharge of oil.

(a) When more than 12 nautical miles from the nearest land, any discharge of oil or oily mixtures into the sea from a ship other than an oil tanker or from machinery space bilges of an oil tanker is prohibited except when all of the following conditions are satisfied—

(1) The oil or oily mixture does not originate from cargo pump room bilges;

(2) The oil or oily mixture is not mixed with oil cargo residues;

(3) The ship is not within a special area;

(4) The ship is proceeding enroute;

(5) The oil content of the effluent without dilution is less than 100 parts per million (ppm); and

(6) The ship has in operation oily-water separating equipment, a bilge monitor, bilge alarm, or combination thereof as required by Part 155 Subpart B of this chapter.

(b) When within 12 nautical miles of the nearest land, any discharge of oil or oily mixtures into the sea from a ship other than an oil tanker or from

machinery space bilges of an oil tanker is prohibited except when all of the following conditions are satisfied—

(1) The oil or oily mixture does not originate from cargo pump room bilges;

(2) The oil or oily mixture is not mixed with oil cargo residues;

(3) The oil content of the effluent without dilution does not exceed 15 ppm;

(4) The ship has in operation oily-water separating equipment, a bilge monitor, bilge alarm, or combination thereof as required by Part 155 Subpart B of this chapter; and

(5) The oily-water separating equipment is equipped with a 15 ppm bilge alarm; for U.S. inspected ships, approved under 46 CFR 162.050 and for U.S. uninspected ships and foreign ships, either approved under 46 CFR 162.050 or listed in the current International Maritime Organization (IMO) Marine Environment Protection Committee (MEPC) Circular summary of MARPOL 73/78 approved equipment.

NOTE: In the navigable waters of the United States, the Federal Water Pollution Control Act (FWPCA), section 311(b)(3) and 40 CFR Part 110 govern all discharges of oil or oily-mixtures.

(c) The cargo related oil residues of an oil tanker, including residues from cargo pump room bilges and all oil residues mixed with oil cargo residues shall not be discharged overboard except as provided for in Part 157 of this chapter.

(d) When more than 12 nautical miles from the nearest land, any discharge of oil or oily mixtures into the sea from a ship other than an oil tanker or from machinery space bilges of an oil tanker; that is not proceeding enroute; shall be in accordance with paragraphs (b)(1), (b)(2), (b)(3), (b)(4), and (b)(5) of this section.

(e) The provisions of paragraphs (a), (b), (c) and (d) of this section do not apply to the discharge of clean or segregated ballast.

(f) The person who is in charge of an oceangoing ship that cannot discharge oil residues into the sea in compliance with paragraphs (a), (b), (c) or (d) of this section shall ensure that those residues are—

(1) Retained on board; or

(2) Discharged to a reception facility. If the reception facility is in a port or terminal in the United States, each person who is in charge of each oceangoing tanker or any other oceangoing ship of 400 gross tons or more shall notify the port or terminal, at least 24 hours before entering the port or terminal, of—

(i) The estimated time of day the ship could discharge residues and mixtures containing oil;

(ii) The type of residues and mixtures containing oil to be discharged; and

(iii) The volume of residues and mixtures containing oil to be discharged.

NOTE: There are Federal, state, or local laws or regulations that could require a written description of the residues and mixtures containing oil to be discharged. For example, a residue or mixture containing oil might have a flashpoint less than 60° C (140° F) and thus have the characteristic of ignitability under 40 CFR 261.21, which might require a description of the waste for a manifest under 40 CFR Part 262, Subpart B. Occupational safety and health concerns may be covered, as well as environmental ones.

The notice required in this section is in addition to those required by other Federal, state, and local laws and regulations. Affected persons should contact the appropriate Federal, state, or local agency to determine whether other notice and information requirements, including 40 CFR Parts 262 and 263, apply to them.

(g) No discharge into the sea shall contain chemicals or other substances introduced for the purpose of circumventing the conditions of discharge specified in this regulation.

(h) This section does not apply to a fixed or floating drilling rig or other platform that is operating under a National Pollutant Discharge Elimination System (NPDES) permit.

[CGD 75–124a, 48 FR 45709, Oct. 6, 1983, as amended by CGD 78–035, 50 FR 36793, Sept. 9, 1985. Redesignated by CGD 88–002, 54 FR 18404, Apr. 28, 1989; USCG–1998–3799, 63 FR 35530, June 30, 1998]

§ 151.11 Exceptions for emergencies.

(a) Sections 151.10 and 151.13 do not apply to—

(1) The discharge into the sea of oil or oily mixture necessary for the purpose of securing the safety of a ship or saving life at sea.

(2) The discharge into the sea of oil or oily mixture resulting from damage to a ship or its equipment—

(i) Provided that all reasonable precautions have been taken after the occurrence of the damage or discovery of the discharge for the purpose of preventing or minimizing the discharge; and

(ii) Except if the owner or the master acted either with intent to cause damage, or recklessly and with knowledge that damage would probably result.

(b) [Reserved]

[CGD 75–134a, 48 FR 45709, Oct. 6, 1983, as amended by CGD 88–002, 54 FR 18404, Apr. 28, 1989]

§ 151.13 Special areas for Annex I of MARPOL 73/78.

(a) For the purposes of §§ 151.09 through 151.25, the special areas are the Mediterranean Sea area, the Baltic Sea area, the Black Sea area, the Red Sea area, the Gulfs area, the Gulf of Aden, and the Antarctic area which are described in § 151.06. The discharge restrictions are effective in the Mediterranean Sea, Baltic Sea, Black Sea, and the Antarctic area.

(b) Subject to the provisions of § 151.11—

(1) A ship of 400 gross tons or over and any oil tanker may not discharge oil or oily mixture within a special area. In the Antarctic area, discharge into the sea of oil or oily mixture from any ship is prohibited.

(2) A ship of less than 400 gross tons other than an oil tanker may not discharge oil or oily mixture within a special area, unless the oil content of the effluent without dilution does not exceed 15 parts per million (ppm).

(3) For the Antarctic area, all ships must be fitted with a tank or tanks of sufficient capacity on board for the retention of all sludge, dirty ballast, tank washing water, and other oily residues and mixtures while operating in the area and must have concluded arrangements to discharge such oily residues at a reception facility after leaving the area.

(c) The provisions of paragraph (b) of this section do not apply to the discharge of clean or segregated ballast.

(d) The provisions of paragraph (b)(1) of this section do not apply to the discharge of processed bilge water from machinery space bilges, provided that all of the following conditions are satisfied—

(1) The bilge water does not originate from cargo pump room bilges;

(2) The bilge water is not mixed with oil cargo residues;

(3) The ship is proceeding enroute;

(4) The oil content of the effluent without dilution does not exceed 15 ppm;

(5) The ship has in operation oily-water separating equipment complying with Part 155 of this chapter; and

(6) The oily-water separating equipment is equipped with a device that stops the discharge automatically when the oil content of the effluent exceeds 15 ppm.

(e) No discharge into the sea shall contain chemicals or other substances introduced for the purpose of circumventing the conditions of discharge specified in this section.

(f) The oil residues that cannot be discharged into the sea in compliance with paragraphs (b), (c), or (d) of this section shall be retained on board or discharged to reception facilities.

(g) Nothing in this section prohibits a ship on a voyage, only part of which is in a special area, from discharging outside the special area in accordance with § 151.10.

(h) In accordance with paragraph (7)(b)(iii) of Regulation 10 of Annex I of MARPOL 73/78, the discharge restrictions in § 151.13 for the Red Sea area, Gulfs area, and the Gulf of Aden area will enter into effect when each party to MARPOL 73/78 whose coastline borders the special area has certified that reception facilities are available and the IMO has established an effective date for each special area. Notice of the effective dates for the discharge requirements in these special areas will be published in the FEDERAL REGISTER and reflected in this section.

[CGD 75–124a, 48 FR 45709, Oct. 6, 1983; 48 FR 54977, Dec. 8, 1983, as amended by CGD 88–002, 54 FR 18404, Apr. 28, 1989; CGD 88–002A, 55 FR 18582, May 2, 1990; CGD 94–056, 60 FR 43377, Aug. 21, 1995]

§ 151.15 Reporting requirements.

(a) The Master or other person having charge of a ship involved in an incident referred to in paragraph (e) of this section, shall report the particulars of such incident without delay and to the fullest extent possible in accordance with the provisions of this section.

(b) In the event of the ship referred to in paragraph (a) of this section being abandoned, or in the event of a report from such ship being incomplete or unobtainable, the owner, charterer, manager or operator of the ship, or their agents shall, to the fullest extent possible assume the obligations placed upon the Master or other person having charge of the ship under the provisions of this section.

(c) Each report shall be made by radio whenever possible, but in any case by the fastest available means at the time the report is made.

(d) Reports shall be directed to the appropriate officer or agency of the government of the country in whose waters the incident occurs. Additionally, for incidents involving U.S. ships, the reports shall be directed to either the nearest Coast Guard Captain of the Port (COTP) or to the National Response Center (NRC), toll free telephone number 800–424–8802, telex number 892427.

(e) The report shall be made whenever an incident involves—

(1) A discharge other than as permitted under this part; or

(2) A discharge permitted under this part by virtue of the fact that—

(i) It is for the purpose of securing the safety of a ship or saving life at sea; or

(ii) It results from damage to the ship or its equipment; or

(3) The probability of a discharge referred to in paragraphs (e)(1) or (e)(2) of this section.

(f) Each report shall contain—

(1) The identity of the ship;

(2) The time and date of the occurrence of the incident;

(3) The geographic position of the ship when the incident occurred;

(4) The wind and sea condition prevailing at the time of the incident;

(5) Relevant details respecting the condition of the ship; and

(6) A statement or estimate of the quantity of oil or oily mixtures discharged or likely to be discharged into the sea.

(g) Each person who is obligated under the provisions of this section to send a report shall—

(1) Supplement the initial report, as necessary, with information concerning further developments; and

(2) Comply as fully as possible with requests from affected countries for additional information concerning the incident.

(h) A report made under this section will satisfy the reporting requirement of § 153.203 of this chapter.

§ 151.17 Surveys.

(a) Every U.S. oil tanker of 150 gross tons and above, and every other U.S. ship of 400 gross tons and above; that is required to have an International Oil Pollution Prevention (IOPP) Certificate on board and to which this part applies, except as provided for in paragraphs (b) and (d) of this section; is subject to the following surveys conducted by the Coast Guard—

(1) An initial survey, conducted before the ship is put in service or before an IOPP Certificate required under § 151.19 is issued for the first time; this survey includes a complete examination of its structure, equipment, systems, fittings, arrangements and material in so far as the ship is covered by this chapter.

(2) Periodic renewal surveys conducted at intervals corresponding with the renewal of the IOPP Certificates. The purpose of the survey is to determine whether the structure, equipment, systems, fittings, arrangements, and material comply with the requirements of Parts 155 and 157 of this chapter.

(3) Annual surveys for inspected ships conducted as close as practicable to twelve (12) and thirty-six (36) months from the date of issuance of the IOPP Certificate, and not more than two months prior to or later than these twelve and thirty-six month dates; this survey is to determine that the oily-water separating equipment and associated pumps and piping systems remain satisfactory for the service intended, and that no unauthorized alterations

have been made, and is to be endorsed on the IOPP Certificate.

(4) Intermediate surveys for inspected ships conducted as close as practicable to twenty-four (24) months from the date of issuance of the IOPP Certificates, and not more than six months prior to or later than that twenty-four month date; this survey is to determine whether the equipment and associated pump and piping systems, including oil discharge monitoring and control systems, and oily-water separating equipment comply with the requirements of Parts 155 and 157 of this chapter, and are in good working order, and is to be endorsed on the IOPP Certificate.

(5) Intermediate surveys for uninspected ships conducted as close as practicable to thirty (30) months from the date of issuance of the IOPP Certificate, and not more than six months prior to or later than that thirty month date; this survey is to determine whether the equipment and associated pump and piping systems, including oil discharge monitoring and control systems, and oily-water separating equipment comply with the requirements of Parts 155 and 157 of this chapter, and are in good working order, and is to be endorsed on the IOPP Certificate.

(b) Every U.S. inspected oil tanker of 150 gross tons and above, and every other U.S. inspected ship of 400 gross tons and above; that is not required to have an IOPP Certificate on board is subject to the following surveys to be conducted by the Coast Guard—

(1) An initial survey conducted before the ship is put into service.

(2) All other surveys are conducted concurrently with either inspections for certification or required reinspections.

(c) After any survey of a ship under this section has been completed, no significant change may be made in the construction, equipment, fittings, arrangements or material covered by the survey without the sanction of the COTP or OCMI except for the direct replacement of such equipment or fittings.

(d) Fixed and floating drilling rigs and other platforms, barges, and uninspected ships; that are not required to have an IOPP Certificate on board are not required to be surveyed under this section.

[CGD 75–124a, 48 FR 45709, Oct. 6, 1983, as amended by USCG–1998–3799, 63 FR 35530, June 30, 1998]

§ 151.19 International Oil Pollution Prevention (IOPP) Certificates.

(a) Each U.S. oil tanker of 150 gross tons and above and each other U.S. ship of 400 gross tons and above; that engages in voyages to ports or off-shore terminals under the jurisdiction of other parties to MARPOL 73/78 must have on board a valid International Oil Pollution Prevention (IOPP) Certificate.

(b) Each oil tanker of 150 gross tons and above and each other ship of 400 gross tons and above, operated under the authority of a country other than the United States that is party to MARPOL 73/78, must have on board a valid IOPP Certificate.

(c) An IOPP Certificate is issued by a COTP, OCMI, or a classification society authorized under 46 CFR part 8, after a satisfactory survey in accordance with the provisions of § 151.17.

(d) The Supplement to the IOPP Certificate is a part of the IOPP Certificate and must remain attached to that Certificate. If the Supplement to the Certificate is changed, a new IOPP Certificate will be required.

(e) The IOPP Certificate for each U.S. inspected ship is valid for a period not to exceed four years from the date of issue, and for each U.S. uninspected ship the IOPP Certificate is valid for a period not to exceed five years from the date of issue, except as follows—

(1) A Certificate ceases to be valid if significant alterations have taken place in the construction, equipment, fittings, or arrangements required by the pollution prevention requirements of parts 155 or 157 of this chapter without the approval of the COTP or the OCMI.

(2) A Certificate Ceases to be valid if intermediate surveys as required by § 151.17 of this part are not carried out.

(3) A Certificate issued to a ship ceases to be valid upon transfer of the ship to the flag of another country.

(Approved by the Office of Management and Budget under control number 2115–0526)

[CGD 75–124a, 48 FR 45709, Oct. 6, 1983, as amended by CGD 95–010, 62 FR 67531, Dec. 24, 1997; USCG–1998–3799, 63 FR 35530, June 30, 1998]

§151.21 Ships of countries not party to MARPOL 73/78.

(a) Each oil tanker of 150 gross tons and above and each other ship of 400 gross tons and above, operated under the authority of a country not a party to MARPOL 73/78, must have on board valid documentation showing that the ship has been surveyed in accordance with and complies with the requirements of MARPOL 73/78. Evidence of compliance may be issued by either the government of a country that is party to MARPOL 73/78 or a recognized classification society.

(b) Evidence of compliance must contain all of the information in, and have substantially the same format as, the IOPP Certificate.

(Approved by the Office of Management and Budget under control number 2115–0526)

[CGD 75–124a, 48 FR 45709, Oct. 6, 1983, as amended by CGD 93–030, 59 FR 51338, Oct. 7, 1994]

§151.23 Inspection for compliance and enforcement.

(a) While at a port or terminal under the jurisdiction of the United States, a ship is subject to inspection by the Coast Guard—

(1) To determine that a valid IOPP Certificate is on board and that the condition of the ship and its equipment corresponds substantially with the particulars of the IOPP Certificate;

(2) To determine that evidence of compliance with MARPOL 73/78, as required by §151.21 is on board and that the condition of the ship and its equipment corresponds substantially with the particulars of this evidence of compliance;

(3) To determine whether a ship has been operating in accordance with and has not discharged any oil or oily mixtures in violation of the provisions of MARPOL 73/78 or this subchapter;

(4) To determine whether a ship has discharged oil or oily mixtures anywhere in violation of MARPOL 73/78, upon request from a party to MARPOL 73/78 for an investigation when the requesting party has furnished sufficient evidence to support a reasonable belief that a discharge has occurred.

(b) A ship that does not comply with the requirements of Parts 151, 155 and 157 of this chapter, or where the condition of the ship or its equipment does not substantially agree with the particulars of the IOPP Certificate or other required documentation, may be detained by order of the COTP or OCMI, at the port or terminal where the violation is discovered until, in the opinion of the detaining authority, the ship can proceed to sea without presenting an unreasonable threat of harm to the marine environment. The detention order may authorize the ship to proceed to the nearest appropriate available shipyard rather than remaining at the place where the violation was discovered.

(c) An inspection under this section may include an examination of the Oil Record Book, the oil content meter continuous records, and a general examination of the ship. A copy of any entry in the Oil Record Book may be made and the Master of the ship may be required to certify that the copy is a true copy of such entry.

[CGD 75–124a, 48 FR 45709, Oct. 6, 1983, as amended by CGD 88–002A, 55 FR 18582, May 2, 1990]

§151.25 Oil Record Book.

(a) Each oil tanker of 150 gross tons and above, ship of 400 gross tons and above other than an oil tanker, and manned fixed or floating drilling rig or other platform shall maintain an Oil Record Book Part I (Machinery Space Operations). An oil tanker of 150 gross tons and above or a non oil tanker that carries 200 cubic meters or more of oil in bulk, shall also maintain an Oil Record Book Part II (Cargo/Ballast Operations).

(b) An Oil Record Book printed by the U.S. Government is available to the masters or operators of all U.S. ships subject to this section, from any

Coast Guard Marine Safety Office, Marine Inspection Office, or Captain of the Port Office.

(c) The ownership of the Oil Record Book of all U.S. ships remains with the U.S. Government.

(d) Entries shall be made in the Oil Record Book on each occasion, on a tank to tank basis if appropriate, whenever any of the following machinery space operations take place on any ship to which this section applies—

(1) Ballasting or cleaning of fuel oil tanks;

(2) Discharge of dirty ballast or cleaning water from fuel oil tanks;

(3) Disposal of oily residues (sludge); and

(4) Discharge overboard or disposal otherwise of bilge water that has accumulated in machinery spaces.

(e) Entries shall be made in the Oil Record Book on each occasion, on a tank to tank basis if appropriate, whenever any of the following cargo/ballast operations take place on any oil tanker to which this section applies—

(1) Loading of oil cargo;

(2) Internal transfer of oil cargo during voyage;

(3) Unloading of oil cargo;

(4) Ballasting of cargo tanks and dedicated clean ballast tanks;

(5) Cleaning of cargo tanks including crude oil washing;

(6) Discharge of ballast except from segregated ballast tanks;

(7) Discharge of water from slop tanks;

(8) Closing of all applicable valves or similar devices after slop tank discharge operations;

(9) Closing of valves necessary for isolation of dedicated clean ballast tanks from cargo and stripping lines after slop tank discharge operations; and

(10) Disposal of residues.

(f) Entries shall be made in the Oil Record Book on each occasion, on a tank-to-tank basis if appropriate, whenever any of the following operations take place on a fixed or floating drilling rig or other platform to which this section applies—

(1) Discharge of ballast or cleaning water from fuel oil tanks; and

(2) Discharge overboard of platform machinery space bilge water.

(g) In the event of an emergency, accidental or other exceptional discharge of oil or oily mixture, a statement shall be made in the Oil Record Book of the circumstances of, and the reasons for, the discharge.

(h) Each operation described in paragraphs (d), (e) and (f) of this section shall be fully recorded without delay in the Oil Record Book so that all the entries in the book appropriate to that operation are completed. Each completed operation shall be signed by the person or persons in charge of the operations concerned and each completed page shall be signed by the master or other person having charge of the ship.

(i) The Oil Record Book shall be kept in such a place as to be readily available for inspection at all reasonable times and shall be kept on board the ship.

(j) The master or other person having charge of a ship required to keep an Oil Record Book shall be responsible for the maintenance of such record.

(k) The Oil Record Book for a U.S. ship shall be maintained on board for not less than three years.

(l) This section does not apply to a barge or a fixed or floating drilling rig or other platform that is not equipped to discharge overboard any oil or oily mixture.

(m) This section does not apply to a fixed or floating drilling rig or other platform that is operating in compliance with a valid National Pollutant Discharge Elimination System (NPDES) permit.

(Approved by the Office of Management and Budget under control number 2115–0025)

[CGD 75–124a, 48 FR 45709, Oct. 6, 1983; 48 FR 54977, Dec. 8, 1983, as amended by CGD 88–002A, 55 FR 18582, May 2, 1990]

§ 151.26 Shipboard oil pollution emergency plans.

(a) *Language of the plan.* The shipboard oil pollution emergency plan must be available on board in English and in the working language of the master and the officers of the ship, if other than English.

(b) *Plan format.* The plan must contain the following six sections. A seventh non-mandatory section may be included at the shipowner's discretion:

(1) *Introduction.* This section must contain the following:

(i) *Introductory text.* The introductory text of the plan must contain the following language (For ships operating in Antarctica, the introductory text of the plan must contain the following language *and* explain that they are in accordance with the Protocol on Environmental Protection to the Antarctic Treaty):

This plan is written in accordance with the requirements of Regulation 26 of Annex I of the International Convention for the Prevention of Pollution from Ships, 1973, as modified by the Protocol of 1978 relating thereto (MARPOL 73/78).

The purpose of the plan is to provide guidance to the master and officers on board the ship with respect to the steps to be taken when a pollution incident has occurred or is likely to occur.

The plan contains all information and operational instructions required by the guidelines (Resolution MEPC.54(32)). The appendices contain names, telephone numbers, telex numbers, etc. of all contacts referenced in the plan, as well as other reference material.

This plan has been approved by the Coast Guard and, except as provided below, no alteration or revision may be made to any part of it without the prior approval of the Coast Guard.

Changes to the seventh section of the plan and the appendices do not require approval by the Coast Guard. The appendices must be maintained up-to-date by the owners, operators, and managers.

(ii) General information.

(A) The ship's name, call sign, official number, International Maritime Organization (IMO) international number, and principal characteristics.

(B) [Reserved]

(2) *Preamble.* This section must contain an explanation of the purpose and use of the plan and indicate how the shipboard plan relates to other shore-based plans.

(3) *Reporting Requirements.* This section of the plan must include information relating to the following:

(i) *When to report.* A report shall be made whenever an incident involves—

(A) A discharge of oil resulting from damage to the ship or its equipment, or for the purpose of securing the safety of a ship or saving life at sea;

(B) A discharge of oil during the operation of the ship in excess of the quantities or instantaneous rate permitted in § 151.10 of this subpart or in § 157.37 of this subchapter; or

(C) A probable discharge. Factors to be considered in determining whether a discharge is probable include, but are not limited to: ship location and proximity to land or other navigational hazards, weather, tide, current, sea state, and traffic density. The master must make a report in cases of collision, grounding, fire, explosion, structural failure, flooding or cargo shifting, or an incident resulting in failure or breakdown of steering gear, propulsion, electrical generating system, or essential shipborne navigational aids.

(ii) *Information required.* This section of the plan must include a notification form, such as that depicted in Table 151.26(b)(3)(ii)(A), that contains information to be provided in the initial and follow-up notifications. The initial notification should include as much of the information on the form as possible, and supplemental information, as appropriate. However, the initial notification must not be delayed pending collection of all information. Copies of the form must be placed at the location(s) on the ship from which notification may be made.

TABLE 151.26(b)(3)(ii)

SHIPBOARD OIL POLLUTION EMERGENCY PLAN SAMPLE FORMAT FOR INITIAL NOTIFICATION	
AA (SHIP NAME, CALL SIGN, FLAG)	
BB (DATE AND TIME OF EVENT, UTC) D D H H M M	
CC (POSITION, LAT, LONG) d d m m N S d d d m m E W	DD (BEARING, DISTANCE FROM LANDMARK) d d d N miles
EE (COURSE) d d d	FF (SPEED, KNOTS) km km 1/10
LL (INTENDED TRACK)	
MM (RADIO STATIONS(S) GUARDED)	
NN (DATE AND TIME OF NEXT REPORT, UTC) D D H H M M	
PP (TYPE AND QUANTITY OF CARGO/BUNKERS ON BOARD)	
QQ (BRIEF DETAILS OF DEFECTS/DEFICIENCIES/DAMAGE)	

TABLE 151.26(b)(3)(ii) Continued

RR (BRIEF DETAILS OF POLLUTION, INCLUDING ESTIMATE OF QUANTITY LOST)
SS (BRIEF DETAILS OF WEATHER AND SEA CONDITIONS) WIND: DIRECTION ⌊⌋⌊⌋⌊⌋ SPEED (Beaufort) SWELL: DIRECTION ⌊⌋⌊⌋⌊⌋ HEIGHT (m)
TT (CONTACT DETAILS OF SHIP'S OWNER/OPERATOR/AGENT)
UU (SHIP SIZE AND TYPE) LENGTH: (m) BREADTH: (m) DRAUGHT: (m) TYPE:
XX (ADDITIONAL INFORMATION) BRIEF DETAILS OF INCIDENT: NEED FOR OUTSIDE ASSISTANCE: ACTIONS BEING TAKEN: NUMBER OF CREW AND DETAILS OF ANY INJURIES: DETAILS OF P&I CLUB & LOCAL CORRESPONDENT: OTHERS:

Note: The alphabetical reference letters in the above format are from "General principles for ship reporting systems and ship reporting requirements, including guidelines for reporting incidents involving dangerous goods, harmful substances and/or marine pollutants" adopted by the International Maritime Organization by resolution A648(16). The letters do not follow the complete alphabetical sequence as certain letters are used to designate information required for other standard reporting formats, e.g. those used to transmit route information.

(iii) *Whom to contact.* (A) This section of the plan must make reference to the appendices listing coastal state contacts, port contacts, and ship interest contacts.

(B) For actual or probable discharges of oil, the reports must comply with the procedures described in MARPOL Protocol I. The reports shall be directed to either the nearest Captain of the Port (COTP) or to the National Response Center (NRC), toll free number 800–424–8802.

(C) For Antarctica, in addition to compliance with paragraph (b)(3)(iii)(B) of this section, reports shall also be directed to any Antarctic station that may be affected.

(4) *Steps to control a discharge.* This section of the plan must contain a discussion of procedures to address the following scenarios:

(i) Operational spills: The plan must outline procedures for removal of oil spilled and contained on deck. The plan must also provide guidance to ensure proper disposal of recovered oil and cleanup materials;

(A) Pipe leakage: The plan must provide specific guidance for dealing with pipe leakage;

(B) Tank overflow: The plan must include procedures for dealing with tank overflows. It must provide alternatives such as transferring cargo or bunkers

to empty or slack tanks, or readying pumps to transfer the excess ashore;

(C) Hull leakage: The plan must outline procedures for responding to spills due to suspected hull leakage, including guidance on measures to be taken to reduce the head of oil in the tank involved either by internal transfer or discharge ashore. Procedures to handle situations where it is not possible to identify the specific tank from which leakage is occurring must also be provided. Procedures for dealing with suspected hull fractures must be included. These procedures must take into account the effect of corrective actions on hull stress and stability.

(ii) Spills resulting from casualties: Each of the casualties listed below must be treated in the plan as a separate section comprised of various checklists or other means which will ensure that the master considers all appropriate factors when addressing the specific casualty. These checklists must be tailored to the specific ship. In addition to the checklists, specific personnel assignments for anticipated tasks must be identified. Reference to existing fire control plans and muster lists is sufficient to identify personnel responsibilities in the following situations:

(A) Grounding;

(B) Fire or explosion;

(C) Collision;

(D) Hull failure; and

(E) Excessive list.

(iii) In addition to the checklist and personnel duty assignments required by paragraph (b)(4)(ii) of this section, the plan must include—

(A) Priority actions to ensure the safety of personnel and the ship, assess the damage to the ship, and take appropriate further action;

(B) Information for making damage stability and longitudinal strength assessments, or contacting classification societies to acquire such information. Nothing in this section shall be construed as creating a requirement for damage stability plans or calculations beyond those required by law or regulation; and

(C) Lightening procedures to be followed in cases of extensive structural damage. The plan must contain information on procedures to be followed for ship-to-ship transfer of cargo. Reference may be made in the plan to existing company guides. A copy of such company procedures for ship-to-ship transfer operations must be kept in the plan. The plan must address the coordination of this activity with the coastal or port state, as appropriate.

(5) *National and Local Coordination.* (i) This section of the plan must contain information to assist the master in initiating action by the coastal State, local government, or other involved parties. This information must include guidance to assist the master with organizing a response to the incident should a response not be organized by the shore authorities. Detailed information for specific areas may be included as appendices to the plan.

(ii) For Antarctica, a vessel owner or operator must include a plan for prompt and effective response action to such emergencies as might arise in the performance of its vessel's activities.

(iii) To comply with paragraph (b)(5)(ii) of this section, an agency of the United States government may promulgate a directive providing for prompt and effective response by the agency's public vessels operating in Antarctica.

(6) *Appendices.* Appendices must include the following information:

(i) Twenty-four hour contact information and alternates to the designated contacts. These details must be routinely updated to account for personnel changes and changes in telephone, telex, and telefacsimile numbers. Clear guidance must also be provided regarding the preferred means of communication.

(ii) The following lists, each identified as a separate appendix:

(A) A list of agencies or officials of coastal state administrations responsible for receiving and processing incident reports;

(B) A list of agencies or officials in regularly visited ports. When this is not feasible, the master must obtain details concerning local reporting procedures upon arrival in port; and

(C) A list of all parties with a financial interest in the ship such as ship and cargo owners, insurers, and salvage interests.

(D) A list which specifies who will be responsible for informing the parties listed and the priority in which they must be notified.

(iii) A record of annual reviews and changes.

(7) *Non-mandatory provisions.* If this section is included by the shipowner, it should include the following types of information or any other information that may be appropriate:

(i) Diagrams;

(ii) Response equipment or oil spill removal organizations;

(iii) Public affairs practices;

(iv) Recordkeeping;

(v) Plan exercising; and

(vi) Individuals qualified to respond.

(8) *Index of sections.* The plan must be organized as depicted in Table 151.26(b)(8).

TABLE 151.26(B)(8)—INDEX OF SECTIONS—SAMPLE FORMAT

Mandatory

Section 1: Introduction
Section 2: Preamble
Section 3: Reporting requirements
Section 4: Steps to control a discharge
Section 5: National and local coordination
Section 6: Appendices

Voluntary

Section 7: Non-mandatory provisions

[CGD 93–030, 59 FR 51338, Oct. 7, 1994, as amended by CGD 97–015, 62 FR 18045, Apr. 14, 1997]

§ 151.27 Plan submission and approval.

(a) No manned ship subject to this part may operate unless it carries on board a shipboard oil pollution emergency plan approved by the Coast Guard. An unmanned ship subject to this regulation must carry the notification list required in § 151.26(b)(3) on board in the documentation container; remaining sections of the plan must be maintained on file at the home office. For new ships, plans must be submitted at least 90 days before the ship intends to begin operations.

(b) An owner or operator of a ship to which this part applies shall prepare and submit one English language copy of the shipboard oil pollution emergency plan to Commandant (G–MOR), U.S. Coast Guard, 2100 Second Street SW., Washington, DC 20593–0001.

(c) An owner or operator with multiple ships to which this part applies may submit one plan for each type of ship with a separate ship-specific appendix for each vessel covered by the plan.

(d) Combined shipboard oil pollution emergency plans and response plans meeting the requirements of subparts D and E of part 155 of this chapter must be prepared according to § 155.1030(j) of this chapter.

(e) If the Coast Guard determines that the plan meets all requirements of this section, the Coast Guard will notify the owner or operator of the ship and return a copy of the approved plan along with an approval letter. The approval period for a plan expires 5 years after the plan approval date.

(f) If the Coast Guard determines that the plan does not meet all of the requirements, the Coast Guard will notify the owner or operator of the plan's deficiencies. The owner or operator must then resubmit two copies of the revised plan, or corrected portions of the plan, within time period specified in the written notice provided by the Coast Guard.

[CGD 93–030, 59 FR 51342, Oct. 7, 1994, as amended by CGD 96–026, 61 FR 33665, June 28, 1996; USCG–1998–3799, 63 FR 35530, June 30, 1998]

§ 151.28 Plan review and revision.

(a) An owner or operator of a ship to which this subpart applies must review the shipboard oil pollution emergency plan annually and submit a letter to Commandant (G–MOR) certifying that the review has been completed. This review must occur within 1 month of the anniversary date of Coast Guard approval of the plan.

(b) The owner or operator shall submit any plan amendments to Commandant (G–MOR) for information or approval.

(c) The entire plan must be resubmitted to Commandant (G–MOR) for reapproval 6 months before the end of the Coast Guard approval period identified in § 151.27(e) of this subpart.

(d) A record of annual review and changes to the plan must be maintained in the last appendix of section six of the plan.

(e) Except as provided in paragraph (f) of this section, revisions must receive prior approval by the Coast Guard before they can be incorporated into the plan.

(f) Revisions to the seventh section of the plan and the appendices do not require approval by the Coast Guard. The Coast Guard shall be advised and provided a copy of the revisions as they occur.

[CGD 93–030, 59 FR 51342, Oct. 7, 1994, as amended by CGD 96–026, 61 FR 33665, June 28, 1996]

§ 151.29 Foreign ships.

(a) Each oil tanker of 150 gross tons and above and each other ship of 400 gross tons and above, operated under the authority of a country other than the United States that is party to MARPOL 73/78, shall, while in the navigable waters of the United States or while at a port or terminal under the jurisdiction of the United States, carry on board a shipboard oil pollution emergency plan approved by its flag state.

(b) Each oil tanker of 150 gross tons and above and each other ship of 400 gross tons and above, operated under the authority of a country that is not a party to MARPOL 73/78, must comply with § 151.21 of this subpart while in the navigable waters of the United States.

[CGD 93–030, 59 FR 51342, Oct. 7, 1994]

NOXIOUS LIQUID SUBSTANCE POLLUTION

SOURCE: Sections 151.30—151.49 appear by CGD 85–010, 52 FR 7759, Mar. 12, 1987, unless otherwise noted.

§ 151.30 Applicability.

(a) Except as provided in paragraph (b) of this section, §§ 151.30 through 151.49 apply to each ship that—

(1) Is operated under the authority of the United States and engages in international voyages;

(2) Is operated under the authority of the United States and is certificated for ocean service;

(3) Is operated under the authority of the United States and is certificated for coastwise service beyond three nautical miles from land;

(4) Is operated under the authority of the United States and operates at any time seaward of the outermost boundary of the territorial sea of the United States as defined in § 2.05–10 of this chapter; or

(5) Is operated under the authority of a country other than the United States while in the navigable waters of the United States, or while at a port or terminal under the jurisdiction of the United States.

(b) Sections 151.30 through 151.49 do not apply to—

(1) A tank barge whose certificate is endorsed by the Coast Guard for a limited short protected coastwise route if the barge is constructed and certificated primarily for service on an inland route;

(2) A warship, naval auxiliary, or other ship owned or operated by a country when engaged in noncommercial service;

(3) A Canadian or U.S. ship being operated exclusively on the Great Lakes of North America or their connecting and tributary waters;

(4) A Canadian or U.S. ship being operated exclusively on the internal waters of the United States and Canada; or

(5) Any other ship specifically excluded by MARPOL 73/78.

NOTE: The term ''internal waters'' is defined in § 2.05–20 of this chapter.

[CGD 88–002, 54 FR 18405, Apr. 28, 1989, as amended by CGD 88–002A, 55 FR 18582, May 2, 1990]

§ 151.31 Where to find requirements applying to oceangoing ships carrying Category A, B, C, and D NLS.

(a) The requirements for oceangoing ships carrying NLSs listed in §§ 151.47 and 151.49 are in §§ 151.33 through 151.45.

(b) The requirements for oceangoing ships carrying NLSs listed in Table 151.05 of 46 CFR part 151 and Table 1 of 46 CFR part 153, which are not listed in § 151.47 or § 151.49, are in 46 CFR parts 98, 151, and 153.

(c) Alternatives to the requirements in this part for oceangoing ships carrying NLSs are in 46 CFR part 153.

(d) Procedures for obtaining permission to carry an NLS not listed in

§151.47, §151.49, Table 151.05 of 46 CFR part 151, or Table 1 of 46 CFR part 153 are in 46 CFR 153.900(c).

§151.32 Special areas for the purpose of Annex II.

(a) For the purposes of §§151.30 through 151.49, the special areas are the Baltic Sea area, the Black Sea area, and the Antarctic area which are described in §151.06. Discharges into the sea of NLSs or mixtures containing such substances are prohibited in the Antarctic area.

(b) In accordance with paragraph (13)(a) of Regulation 5 of Annex II of MARPOL 73/78, the discharge restrictions in §151.32 for the Baltic Sea area and the Black Sea area will enter into effect when each Party to MARPOL 73/78 whose coastline borders the special area has certified that reception facilities are available and the IMO has established an effective date for each special area. Notice of the effective date for discharge requirements in these areas will be published in the FEDERAL REGISTER and reflected in this section.

[CGD 94–056, 60 FR 43378, Aug. 21, 1995]

§151.33 Certificates needed to carry Category C Oil-like NLS.

(a) A U.S. oceangoing ship may not carry a Category C oil-like NLS listed in §151.49 in a cargo tank unless the ship has a Certificate of Inspection endorsed to allow the NLS to be carried in that cargo tank, and if the ship engages in a foreign voyage—

(1) An Attachment for NLSs to the IOPP Certificate, issued under §151.37(a), that allows the NLS to be carried in that cargo tank; or

(2) A Certificate of Fitness issued under 46 CFR part 153 that allows the NLS to be carried in that cargo tank.

(b) A foreign oceangoing ship operating in the navigable waters of the U.S. may not carry a Category C oil-like NLS listed in §151.49 in a cargo tank unless the ship has—

(1) An Attachment for NLSs to the IOPP Certificate that allows the NLS to be carried in that cargo tank; or

(2) A Certificate of Compliance issued under 46 CFR Part 153 to allow the NLS to be carried in that cargo tank.

(c) A U.S. oceangoing ship authorized to carry certain dangerous cargoes in bulk under 46 CFR Part 98 may not carry a Category C oil-like NLS listed in §151.49 in a cargo tank unless the ship has a Certificate of Inspection endorsed to allow the NLS to be carried in that cargo tank, and if the ship engages in a foreign voyage, an NLS Certificate issued under §151.37(b) that allows the NLS to be carried in that cargo tank.

§151.35 Certificates needed to carry Category D NLS and Category D Oil-like NLS.

(a) A U.S. oceangoing ship may not carry a Category D NLS listed in §151.47 in a cargo tank unless the ship has a Certificate of Inspection endorsed to allow the NLS to be carried in that cargo tank, and if the ship engages if a foreign voyage—

(1) An NLS Certificate issued under §151.37(b) to allow the NLS to be carried in that cargo tank; or

(2) A Certificate of Fitness issued under 46 CFR part 153 to allow the NLS to be carried in that cargo tank.

(b) A U.S. oceangoing ship may not carry a Category D oil-like NLS listed in §151.49 in a cargo tank unless the ship has a Certificate of Inspection endorsed to allow the NLS to be carried in that cargo tank, and if the ship engages if a foreign voyage—

(1) An Attachment for NLSs to the IOPP Certificate, issued under §151.37(a), to allow the NLS to be carried in that cargo tank; or

(2) An NLS Certificate issued under §151.37(b) to allow the NLS to be carried in that cargo tank, or

(3) A Certificate of Fitness issued under 46 CFR part 153 to allow the NLS to be carried in that cargo tank.

(c) A foreign oceangoing ship in the navigable waters of the U.S. may not carry a Category D NLS listed in §151.47 in a cargo tank unless the ship has one of the following:

(1) An NLS Certificate endorsed to allow the NLS to be carried in that cargo tank; or

(2) A Certificate of Compliance issued under 46 CFR part 153 to allow the NLS to be carried in that cargo tank.

(d) A foreign oceangoing ship in the navigable waters of the U.S. may not carry a Category D oil-like NLS listed

in § 151.49 in a cargo tank unless the ship has one of the following:

(1) An Attachment for NLSs to the IOPP Certificate to allow the NLS to be carried in that cargo tank; or

(2) An NLS Certificate endorsed to allow the NLS to be carried in the cargo tank; or

(3) A Certificate of Compliance issued under 46 CFR part 153 to allow the NLS to be carried in the cargo tank.

(e) A U.S. oceangoing ship authorized to carry certain dangerous cargoes in bulk under 46 CFR part 98 may not carry a Category D NLS listed in § 151.47 or a Category D oil-like NLS listed in § 151.49 in a cargo tank unless the ship has a Certificate of Inspection endorsed to allow the NLS to be carried in that cargo tank, and if the ship engages in a foreign voyage, an NLS Certificate issued under § 151.37(b) that allows the NLS to be carried in that cargo tank.

§ 151.37 Obtaining an Attachment for NLSs to the IOPP Certificate and obtaining an NLS Certificate.

(a) The Coast Guard or a classification society authorized under 46 CFR part 8 issues an Attachment for NLSs to the IOPP Certificate to an oceangoing ship to allow the carriage of a Category C oil-like NLS or a Category D oil-like NLS if the following requirements are met:

(1) Except for ships that are not configured and are not equipped to ballast or wash cargo tanks while proceeding en route, the ship must have a Coast Guard approved monitor under § 157.12 that is approved for the cargoes that are desired to be carried.

(2) Except as required by paragraph (a)(3), ships of 150 meters or less in length carrying a Category C oil-like NLS must meet the damage stability requirements applying to a Type III hull as provided by Regulation 14 (c) of Annex II.

(3) A U.S. self propelled ship of 150 meters or less in length on a coastwise voyage carrying a Category C oil-like NLS must meet the damage stability requirements applying to a Type III hull as provided by 46 CFR part 172, subpart F except §§ 172.130 and 172.133.

(b) Except as allowed in paragraph (c) of this section, the Coast Guard or a classification society authorized under 46 CFR part 8 issues an NLS Certificate endorsed to allow the oceangoing ship engaged in a foreign voyage to carry a Category D NLS listed in § 151.47 if the ship has—

(1) An approved Procedures and Arrangements Manual and Cargo Record Book, both meeting the requirements in 46 CFR 153.490; and

(2) A residue discharge system meeting 46 CFR 153.470, unless the approved Procedures and Arrangements Manual limits discharge of Category D NLS residue to the alternative provided by 46 CFR 153.1128(b).

(c) The Coast Guard or a classification society authorized under 46 CFR part 8 issues a NLS Certificate with the statement that the vessel is prohibited from discharging NLS residues to the sea if the vessel does not meet 46 CFR 153.470 and 153.490 but meets 46 CFR subpart 98.31.

[CGD 75–124a, 48 FR 45709, Oct. 6, 1983, as amended by CGD 95–010, 62 FR 67532, Dec. 24, 1997]

§ 151.39 Operating requirements: Category D NLS.

The master or person in charge of an oceangoing ship that carries a Category D NLS listed in § 151.47 shall ensure that the ship is operated as prescribed for the operation of oceangoing ships carrying Category D NLSs in 46 CFR 153.901, 153.906, 153.909, 153.1100, 153.1104, 153.1106, 153.1124, 153.1126, and 153.1128.

§ 151.41 Operating requirements for oceangoing ships with IOPP Certificates: Category C and D Oil-like NLSs.

The master or person in charge of an oceangoing ship certificated under § 151.37(a) shall ensure that—

(a) The carriage and discharge of the oil-like NLS meets §§ 157.29, 157.31, 157.35, 157.37, 157.41, 157.45, 157.47, and 157.49 of this chapter; and

(b) The oil-like NLS is not discharged unless—

(1) The monitor required by § 151.37(a)(1) is set to detect the oil-like NLS; and

(2) A statement that the monitor has been set to detect the oil-like NLS is entered in the Oil Record Book Part

II(Cargo/Ballast Operations), required by §151.25.

§151.43 Control of discharge of NLS residues.

(a) Unless the ship is a fixed or floating drilling rig or other platform operating under an National Pollution Discharge Elimination System (NPDES) permit, the master or person in charge of an oceangoing ship that cannot discharge NLS residue into the sea in accordance with 46 CFR 153.1126 or 153.1128 shall ensure that the NLS residue is—

(1) Retained on board; or

(2) Discharged to a reception facility.

(b) If Category A, B, or C NLS cargo or NLS residue is to be transfered at a port or terminal in the United States, the master or person in charge of each oceangoing ship carrying NLS cargo or NLS residue shall notify the port or terminal at least 24 hours before entering the port or terminal of—

(1) The name of the ship;

(2) The name, category and volume of NLS cargo to be unloaded;

(3) If the cargo is a Category B or C high viscosity NLS cargo or solidifying NLS cargo listed in Table 1 of 46 CFR Part 153 with a reference to ''§153.908(a)'' or ''§153.908(b)'' in the ''Special Requirements'' column of that table, the time of day the ship is estimated to be ready to discharge NLS residue to a reception facility;

(4) If the cargo is any Category B or C NLS cargo not under paragraph (b)(3) of this section, whether or not the ship meets the stripping requirements under 46 CFR 153.480, 153.481, or 153.482;

(5) The name and the estimated volume of NLS in the NLS residue to be discharged;

(6) The total volume of NLS residue to be discharged; and

(7) The name and amount of any cleaning agents to be used during the prewash required by 46 CFR 153.1120.

(c) The master or person in charge of a U.S. ship in a special area shall operate the ship in accordance with 46 CFR 153.903.

NOTE: The master or person in charge of a ship carrying Category A NLS that is required to prewash tanks under the procedures in 46 CFR Part 153.1120 is required under 46 CFR 153.1101 to notify the COTP at least 24 hours before a prewash surveyor is needed.

§151.45 Reporting spills of NLS: Category A, B, C, and D.

(a) The master or person in charge of an oceangoing ship involved in any incident described in paragraph (d) of this section, shall report the particulars of each incident without delay and to the fullest extent possible in accordance with the requirements of this section.

(b) If a ship involved in an incident is abandoned, or if a report from that ship is incomplete or unobtainable, the owner, charterer, manager, or operator of that ship or their agents shall, to the fullest extent possible, assume the obligations placed upon the master or person in charge under the requirements of this section.

(c) Each report must be made by radio or the fastest means available at the time the report is made to—

(1) The appropriate officer or agency of the government of a country in whose waters the incident occurs; and

(2) For incidents involving U.S. ships, the nearest Coast Guard Captain of the Port (COTP) or the National Response Center (NRC), toll free telephone number 800–424–8802, telex number 892427.

(d) The report must be made whenever an incident involves a discharge or the probability of a discharge—

(1) Other than as allowed by §§151.30 through 151.49; or

(2) Allowed by §§151.30 through 151.49 because it—

(i) Secures the safety of the ship or saves lives at sea; or

(ii) It results from damage to the ship or its equipment.

(e) Each report must contain—

(1) The identity of the ship;

(2) The name of the NLS discharged;

(3) The time and date of the occurrence of the incident;

(4) The geographic position of the ship when the incident occurred;

(5) The wind and sea condition prevailing at the time of the incident;

(6) Relevant details respecting the condition of the ship; and

(7) A statement or estimate of the quantity of the NLS cargo or NLS residue discharged or likely to be discharged into the sea.

(f) Each person who is obligated under the provisions of this section to send a report shall—

(1) Supplement the initial report, as necessary, with information concerning further developments; and

(2) Comply as fully as possible with requests from affected countries for additional information concerning the incident.

(g) A report made under this section satisfies the reporting requirement of § 153.203 of this chapter.

[CGD 85–010, 52 FR 7759, Mar. 12, 1987, as amended by CGD 88–002A, 55 FR 18582, May 2, 1990]

§ 151.47 Category D NLSs other than oil-like Category D NLSs that may be carried under this part.

The following is a list of Category D NLSs other than Oil-like Category D NLSs that the Coast Guard allows to be carried:

Acetophenone
Acrylonitrile-Styrene copolymer dispersion in Polyether polyol
iso- & cyclo-Alkane (C10–C11)
Alkenyl(C11+)amine
Alkyl(C8+)amine, Alkenyl (C12+) acid ester mixture
Alkyl dithiothiadiazole (C6–C24)
Alkyl ester copolymer (C6–C18)
Alkyl phenol sulfide (C8–C40)
Ammonium hydrogen phosphate solution
Ammonium nitrate solution (45% or less)
Ammonium nitrate, Urea solution (2% or less NH_3)
Ammonium phosphate, Urea solution
Ammonium polyphosphate solution
Ammonium sulfate solution (20% or less)
Amyl alcohol (iso-, n-, sec-, primary)
Animal and Fish oils, n.o.s. (*see also Oil, edible)*
Animal and Fish acid oils and distillates, n.o.s.
Aryl polyolefin (C11–C50)
Brake fluid base mixtures
Butylene glycol
iso-Butyl formate
n-Butyl formate
gamma-Butyrolactone
Calcium hydroxide slurry
Calcium long chain alkyl sulfonate (C11–C50)
Calcium long chain alkyl phenate (C8–C40)
Calcium long chain alkyl phenate sulfide (C8–C40)
Caprolactam solutions
Chlorine chloride solution
Citric acid (70% or less)
Cyclohexanol
Decahydronaphthalene
Decane
Decylbenzene (n-)
Diacetone alcohol
Dialkyl(C10–C14) benzenes
Dialkyl(C7–C13) phthalates
Diethanolamine
Diethylene glycol
Diethylene glycol butyl ether acetate, *see* Poly(2-8) alkylene glycol monoalkyl(C1–C6) ether acetate
Diethylene glycol dibutyl ether
Diethylene glycol ethyl ether, *see* Poly(2-8)alkylene glycol monoalkyl(C1-C6) ether
Diethylene glycol ethyl ether acetate, *see* Poly(2–8)alkylene glycol monoalkyl(C1–C6) ether acetate
Diethylene glycol methyl ether acetate, *see* Poly(2–8)alkylene glycol monoalkyl(C1–C6) ether acetate
Diethylene glycol phenyl ether
Diethylene glycol phthalate
Di-(2-ethylhexyl)adipate
Di-(2-ethylhexyl)phthalate
1,4-Dihydro-9,10-dihydroxy anthracene, disodium salt solution
Diisobutyl ketone
Diisodecyl phthalate
Diisononyl adipate
Diisononyl phthalate
2,2-Dimethylpropane-1,3-diol
Dinonyl phthalate
Dipropylene glycol dibenzoate
Dipropylene glycol methyl ether, *see* Poly(2–8)alkylene glycol monoalkyl(C1–C6) ether
Ditridecyl phthalate
Diundecyl phthalate
Dodecenylsuccinic acid, dipotassium salt solution
2–Ethoxyethanol, *see* Ethylene glycol monoalkyl ethers
Ethoxy triglycol *(crude)*
2-Ethyl-2-(hydroxymethyl)propane-1,3-diol, C8-C10 ester
Ethyl acetate
Ethyl acetoacetate
Ethyl butanol
Ethylenediaminetetraacetic acid, tetrasodium salt solution
Ethylene glycol
Ethylene glycol acetate
Ethylene glycol dibutyl ether
Ethylene glycol ethyl ether, *see Ethylene glycol monoalkyl ethers*
Ethylene glycol isopropyl ether, *see Ethylene glycol monoalkyl ethers*
Ethylene glycol methyl butyl ether
Ethylene glycol methyl ether, *see* Ethylene glycol monoalkyl ethers
Ethylene glycol monoalkyl ethers
Including:
2-Ethoxyethanol
Ethylene glycol butyl ether
Ethylene glycol tert-butyl ether
Ethylene glycol ethyl ether
Ethylene glycol methyl ether
Ethylene glycol n-propyl ether
Ethylene glycol isopropyl ether
Ethylene glycol phenyl ether

Ethylene glycol phenyl ether, Diethylene glycol phenyl ether mixture
2-Ethylhexanoic acid
Ethyl propionate
Ferric hydroxyethylethylene diamine triacetic acid, trisodium salt solution
Formamide
Glycerine (83%), Dioxanedimethanol (17%) mixture
Glycerol monooleate
Glyoxal solution (40% or less)
Heptanoic acid
Hexamethylenediamine adipate
Hexamethylenetetramine solutions
Hexanoic acid
Hexanol
N-(Hydroxyethyl)ethylenediamine triacetic acid, trisodium salt solution
Isophorone
Lactic acid
Latex (ammonia (1% or less) inhibited)
Lecithin (*soyabean*)
Long chain alkaryl sulfonic acid (C16–C60)
Magnesium long chain alkaryl sulfonate (C11–C50)
Magnesium long chain alkyl phenate sulfide (C8–C20)
3-Methoxybutyl acetate
Methyl acetoacetate
Methyl alcohol
Methyl butenol
Methyl butyl ketone
Methyl isobutyl ketone
Methyl tert-butyl ether
Methyl butynol
Methyl propyl ketone
N-Methyl-2-pyrrolidone
Myrcene
Naphthalene sulfonic acid-formaldehyde copolymer, sodium salt solution
Nonanoic acid (all isomers)
Nonanoic, Tridecanoic acid mixture
Nonyl methacrylate
Noxious Liquid Substance, (17) n.o.s.
Octadecenoamide solution
Octanoic acid
Oil, edible:
- Babassu
- Beechnut
- Castor
- Cocoa butter
- Coconut
- Cod liver
- Corn
- Cottonseed
- Fish
- Groundnut
- Hazelnut
- Nutmeg butter
- Olive
- Palm
- Palm kernel
- Peanut
- Poppy
- Raisin seed
- Rapeseed
- Rice bran
- Safflower
- Salad
- Sesame
- Soya bean
- Sunflower seed
- Tucum
- Vegetable
- Walnut

Oil, misc:
- Animal, n.o.s.
- Coconut oil, esterified
- Coconut oil, fatty acid methyl ester
- Lanolin
- Linseed
- Neatsfoot
- Oiticica
- Palm oil, fatty acid methyl ester
- Palm oil, methyl ester
- Perilla
- Pilchard
- Soya bean (epoxidized)
- Sperm
- Tung
- Whale

Olefin/Alkyl ester copolymer (molecular weight 2000+)
Oleic acid
Palm kernel acid oil, methyl ester
Palm kernel oil, fatty acid methyl ester, *see* Palm kernel acid oil, methyl ester
Palm stearin
Pentaethylenehexamine
Pentanoic acid
Poly(2-8)alkylene glycol monoalkyl(C1-C6) ether
Including:
Diethylene glycol butyl ether
Diethylene glycol ethyl ether
Diethylene glycol n-hexyl ether
Diethylene glycol methyl ether
Diethylene glycol n-propyl ether
Dipropylene glycol butyl ether
Dipropylene glycol methyl ether
Polypropylene glycol methyl ether
Triethylene glycol butyl ether
Triethylene glycol ethyl ether
Triethylene glycol methyl ether
Tripropylene glycol methyl ether

Poly(2-8)alkylene glycol monoalkyl(C1-C6) ether acetate
Including:
Diethylene glycol butyl ether acetate
Diethylene glycol ethyl ether acetate
Diethylene glycol methyl ether acetate

Polyalkylene glycols, Polyalkylene glycol monoalkyl ethers mixtures
Polypropylene glycol methyl ether, *see* Poly(2-8)alkylene glycol monoalkyl(C1-C6) ether
Including:
n-Propoxypropanol
Propylene glycol n-butyl ether
Propylene glycol ethyl ether
Propylene glycol methyl ether

Polyalkyl methacrylate (C1–C20)
Polybutenyl succinimide

Polyether (molecular weight 2000+)
Polyethylene glycol monoalkyl ether
Polyolefin amide alkeneamine (C28+)
Polyolefin amide alkeneamine borate (C28–C250)
Polyolefin amide alkeneamine polyol
Polyolefin anhydride
Polyolefin ester (C28–C250)
Polyolefin phenolic amine (C28–C250)
Polyolefin phosphorosulfide, barium derivative
Polypropylene glycol
n-Propyl acetate
Propylene glycol monoalkyl ether
Propylene glycol ethyl ether, *see* Propylene glycol monoalkyl ether
Propylene glycol methyl ether, *see* Propylene glycol monoalkyl ether
Propylene glycol methyl ether acetate
Propylene glycol phenyl ether
Sodium acetate solution
Sodium benzoate *solution*
Sodium carbonate solution
Soybean oil (epoxidized)
Sulfohydrocarbon (C3–C88)
Sulfolane
Tallow
Tallow fatty acid
Tetrasodium salt of Ethylenediaminetetraacetic acid solution
Triethylene glycol butyl ether, *see* Poly(2-8)alkylene glycol monoalkyl(C1-C6) ether
Triethylene glycol ethyl ether, *see* Poly(2–8)alkylene glycol monoalkyl(C1–C6) ether
Triethylene glycol methyl ether, *see* Poly(2–8)alkylene glycol monoalkyl(C1–C6) ether
Triethyl phosphate
Trimethylol propane polyethoxylate
Tripropylene glycol methyl ether, *see* Poly(2–8)alkylene glycol monoalkyl(C1–C6) ether
Trisodium salt of N-(Hydroxyethyl)- ethylenediamine triacetic acid solution
Urea, Ammonium mono- and di-hydrogen phosphate, Potassium chloride solution
Urea, Ammonium nitrate solution (2% or less NH_3)
Urea, Ammonium phosphate solution
Vegetable oils, n.o.s. (*see also Oil, edible)*
Vegetable acid oils and distillates, n.o.s.
Waxes:
  Candelilla
  Carnauba
Zinc alkenyl carboxamide

[CGD 85–010, 52 FR 7759, Mar. 12, 1987, as amended by CGD 88–100a, 54 FR 40000, Sept. 29, 1989; 55 FR 17269, Apr. 24, 1990; CGD 92–100a, 59 FR 16986, Apr. 11, 1994; CGD 94–901, 59 FR 45147, Aug. 31, 1994; CGD 95–901, 60 FR 34039, June 29, 1995]

§ 151.49 Category C and D Oil-like NLSs allowed for carriage.

The following is a list of Category C and D Oil-like NLSs that the Coast Guard allows to be carried:

(a) The following Category C oil-like NLSs may be carried:

Aviation alkylates
Cycloheptane
Cyclohexane
Cyclopentane
p-Cymene
Ethylcyclohexane
Heptane (all isomers)
Heptene (all isomers)
Hexane (all isomers)
Hexene (all isomers)
Isopropylcyclohexane
iso-Propylcyclohexane
Methyl cyclohexane
2-Methyl-1-pentene, *see* Hexene (all isomers)
Nonane (all isomers)
Octane (all isomers)
Olefin mixtures (C5–C7)
Pentane (all isomers)
Pentene (all isomers)
1-Phenyl-1-xylylethane
Propylene dimer
Tetrahydronaphthalene
Toluene
Xylenes

(b) The following Category D oil-like NLSs may be carried:

Diisopropyl naphthalene

[CGD 85–010, 52 FR 7759, Mar. 12, 1987, as amended by CGD 88–100a, 54 FR 40001, Sept. 29, 1989; 55 FR 17269, Apr. 24, 1990; CGD 92–100a, 59 FR 16987, Apr. 11, 1994; CGD 94–901, 59 FR 45148, Aug. 31, 1994; CGD 95–901, 60 FR 34039, June 29, 1995]

GARBAGE POLLUTION AND SEWAGE

SOURCE: Sections 151.51—151.77 and Appendix A appear by CGD 88–002, 54 FR 18405, Apr. 28, 1989, unless otherwise noted.

§ 151.51 Applicability.

(a) Except as provided by paragraph (b) of this section, §§ 151.51 through 151.77 apply to—

(1) Each ship that is of United States registry or nationality, or one operated under the authority of the United States, including recreational vessels defined in 46 U.S.C. 2101(25) and uninspected vessels defined in 46 U.S.C. 2101(43), wherever located; and

(2) Each ship, other than a ship referred to in paragraph (a)(1) of this section, while in the navigable waters or the Exclusive Economic Zone of the United States.

(b) Sections 151.51 through 151.77 do not apply to—

(1) A warship, naval auxiliary, or other ship owned or operated by the

United States when engaged in noncommercial service; or

(2) Any other ship specifically excluded by MARPOL 73/78.

NOTE: The Exclusive Economic Zone extends from the baseline of the territorial sea seaward 200 miles as defined in the Presidential Proclamation 5030 of March 10, 1983 (3 CFR, 1983 Comp. p. 22).

[CGD 88–002, 54 FR 18405, Apr. 28, 1989, as amended by CGD 88–002A, 55 FR 18582, May 2, 1990]

§ 151.53 Special areas for Annex V of MARPOL 73/78.

(a) For the purposes of §§ 151.51 through 151.77, the special areas are the Mediterranean Sea area, the Baltic Sea area, the Black Sea area, the Red Sea area, the Gulf areas, the North Sea area, the Antarctic area, and the Wider Caribbean region, including the Gulf of Mexico and the Caribbean Sea which are described in § 151.06. The discharge restrictions are effective in the Baltic Sea, the North Sea, and the Antarctic area.

(b) In accordance with paragraph (4)(b) of Regulation 5 of Annex V of MARPOL 73/78, the discharge restrictions in § 151.71 for special areas will enter into effect when each party to MARPOL 73/78 whose coastline borders the special area has certified that reception facilities are available and the IMO has established an effective date for each special area. Notice of the effective dates for the discharge requirements in each special area will be published in the FEDERAL REGISTER and reflected in this section.

[CGD 94–056, 60 FR 43378, Aug. 21, 1995]

§ 151.55 Recordkeeping requirements.

(a) This section applies to the following:

(1) Each manned oceangoing ship (other than a fixed or floating platform) of 12.2 meters (approximately 40 feet) or more in length that is engaged in commerce and that is documented under the laws of the United States or numbered by a State.

(2) Each manned fixed or floating platform subject to the jurisdiction of the United States.

(b) The master or person in charge of each ship under paragraph (a)(1) or (a)(2) of this section shall ensure that a written record is maintained on the ship of each of the following garbage discharge or disposal operations:

(1) Discharge overboard.

(2) Discharge to another ship.

(3) Discharge to a reception facility.

(4) Incineration on the ship.

(c) The record under paragraph (b) of this section must contain the following information on each discharge or disposal operation:

(1) The type of operation as described under paragraphs (b)(1) through (b)(4) of this section.

(2) The date and time of the operation.

(3) If the operation was conducted at a port, the name of the port.

(4) If the operation was not conducted at a port, the latitude and longitude of the location where the operation was conducted and the estimated distance of that location from shore. If the operation involved off-loading to another ship, the identity of the receiving ship by name and official number.

(5) The amount of garbage involved, described by volume in cubic meters.

(6) For discharges into the sea, a description of the contents of the garbage, described by the following categories:

(i) Plastic material.

(ii) Floating dunnage, lining, or packing material.

(iii) Ground paper products, rags, glass, metal, bottles, crockery, or other similar garbage.

(iv) Unground paper products, rags, glass, metal, bottles, crockery, or other similar garbage.

(v) Victual wastes.

(vi) Incinerated ash.

(vii) Incinerated plastic residue.

(d) The record under paragraph (b) of this section must be prepared at the time of the operation, certified as correct by the master or person in charge of the ship, maintained on the ship for two years following the operation, and made available for inspection by the Coast Guard.

[CGD 92–71, 59 FR 18703, Apr. 19, 1994]

§ 151.57 Waste management plans.

(a) This section applies to the following:

(1) Each manned oceangoing ship (other than a fixed or floating platform) of 40 feet or more in length that is documented under the laws of the United States or numbered by a state and that either is engaged in commerce or is equipped with a galley and berthing.

(2) Each manned fixed or floating platform that is—

(i) Documented under the laws of the United States; or

(ii) Operating under the authority of the United States, including, but not limited to, a lease or permit issued by an agency of the United States.

(b) The master or person in charge of a ship under paragraphs (a)(1) and (a)(2) of this section shall ensure that the ship is not operated unless a waste management plan meeting paragraph (c) of this section is on the ship and that each person handling garbage follows the plan.

(c) Each waste management plan under paragraph (b) of this section must be in writing and—

(1) Provide for the discharge of garbage by means that meet Annex V of MARPOL 73/78, the Act, and §§ 151.51 through 151.77;

(2) Describe procedures for collecting, processing, storing, and discharging garbage; and

(3) Designate the person who is in charge of carrying out the plan.

(Approved by the Office of Management and Budget under control number 2115–0120)

[CGD 88–002A, 55 FR 18582, May 2, 1990]

§ 151.59 Placards.

(a) This section applies to the following:

(1) Each manned U.S. ship (other than a fixed or floating platform) that is 26 feet or more in length.

(2) Each manned floating platform in transit that is—

(i) Documented under the laws of the United States; or

(ii) Operating under the authority of the United States, including, but not limited to, a lease or permit issued by an agency of the United States.

(b) The master or person in charge of each ship under paragraph (a)(1) or (a)(2) of this section shall ensure that one or more placards meeting the requirements of this section are displayed in prominent locations and in sufficient numbers so that they can be read by the crew and passengers. These locations must be readily accessible to the intended reader and may include embarkation points, food service facilities, garbage handling spaces, and common spaces on deck. If the Captain of the Port determines that the number or location of the placards is insufficient to adequately inform crew and passengers, the Captain of the Port may require additional placards and may specify their locations.

(c) Each placard must be at least nine inches wide by four inches high, made of a durable material, and lettered with letters at least ⅛ inch high.

(d) Except as under paragraph (e) of this section, the placard must notify the reader of the following:

(1) The discharge of plastic or garbage mixed with plastic into any waters is prohibited.

(2) The discharge of all garbage is prohibited in the navigable waters of the United States and, in all other waters, within three nautical miles of the nearest land.

(3) The discharge of dunnage, lining, and packing materials that float is prohibited within 25 nautical miles of the nearest land.

(4) Other unground garbage may be discharged beyond 12 nautical miles from the nearest land.

(5) Other garbage ground to less than one inch may be discharged beyond three nautical miles of the nearest land.

(6) A person who violates the above requirements is liable for a civil penalty for each violation, and the criminal penalties of a class D felony. Placards installed on vessels before May 7, 1997, need not be replaced; and existing stocks of placards, containing previous language, may be used. When language on a placard is inconsistent with the language in the Code of Federal Regulations (CFR) due to use of a placard containing previous language penalty amounts contained in the CFR are controlling.

(7) Regional, State, and local restrictions on garbage discharges also may apply.

(e) For ships while operating on the Great Lakes or their connecting or tributary waters, the placard must—

(1) Notify the reader of the information in paragraph (d) of this section; or

(2) Notify the reader of the following:

(i) The discharge of all garbage into the Great Lakes or their connecting or tributary waters is prohibited.

(ii) A person who violates the above requirements is liable for a civil penalty for each violation, and the criminal penalties of a class D felony. Placards installed on vessels before May 7, 1997, need not be replaced; and existing stocks of placards, containing previous language, may be used. When language on a placard is inconsistent with the language in the Code of Federal Regulations (CFR) due to use of a placard containing previous language, penalty amounts contained in the CFR are controlling.

[CGD 88–002A, 56 FR 8880, Mar. 1, 1991, as amended by CGD 96–052, 62 FR 16703, Apr. 8, 1997; 62 FR 31340, June 9, 1997]

§151.61 Inspection for compliance and enforcement.

While within the navigable waters of the United States or the Exclusive Economic Zone, a ship is subject to inspection by the Coast Guard or other authorized federal agency to determine if—

(a) The ship has been operating in accordance with these regulations and has not discharged plastics or other garbage in violation of the provisions of the Act or Annex V of MARPOL 73/78;

(b) Grinders or comminuters used for the discharge of garbage between 3 and 12 nautical miles from nearest land are capable of reducing the size of garbage so that it will pass through a screen with openings no greater than 25 millimeters (one inch);

(c) Information for recordkeeping requirements, when required under §151.55, is properly and accurately logged;

(d) A waste management plan, when required under §151.57, is on board and that the condition of the ship, equipment and operational procedures of the ship meet the plan; and

(e) Placards, when required by §151.59, are posted on board.

[CGD 88–002, 54 FR 18405, Apr. 28, 1989, as amended by CGD 88–002A, 55 FR 18583, May 2, 1990]

§151.63 Shipboard control of garbage.

(a) The master, operator, or person who is in charge of a ship shall ensure that all garbage is discharged ashore or in accordance with §§151.66–151.73.

(b) The following factors, among others, may be considered by enforcement personnel in evaluating compliance with §§151.51 through 151.77:

(1) Records, including receipts, of garbage discharges at port reception facilities.

(2) Records under §151.55 or log entries of garbage discharges.

(3) The presence and operability of equipment to treat ship-generated garbage, including, but not limited to, incinerators, grinders, or comminuters.

(4) The presence of and adherence to a written shipboard waste management plan.

(5) The absence of plastics in ship stores.

(6) Ongoing educational programs to train shipboard personnel of garbage handling procedures and the need for these.

(7) The presence of shipboard spaces used for collecting, processing, storing and discharging ship-generated garbage.

(c) The master, operator, or person who is in charge of a ship shall ensure that if garbage is transported from a ship by shipboard personnel, it is properly deposited into a port or terminal's reception facility.

[CGD 88–002, 54 FR 18405, Apr. 28, 1989, as amended by CGD 88–002A, 55 FR 18583, May 2, 1990; CGD 92–71, 59 FR 18703, Apr. 19, 1994]

§151.65 Reporting requirements.

The master or person who is in charge of each oceangoing ship shall notify the port or terminal, at least 24 hours before entering the port or terminal, of the name of the ship and the estimated volume of garbage requiring disposal, if any of the following types of garbage are to be discharged:

(a) Garbage regulated by the Animal and Plant Health Inspection Service

(APHIS) of the U.S. Department of Agriculture under 7 CFR 330.400 or 9 CFR 94.5.

(b) Medical wastes.

(c) Hazardous wastes defined in 40 CFR 261.3.

§ 151.66 Operating requirements: Discharge of garbage in the navigable waters prohibited.

No person on board any ship may discharge garbage into the navigable waters of the United States.

NOTE: The navigable waters are defined in § 2.05–25 of this chapter.

[CGD 88–002, 54 FR 18405, Apr. 28, 1989, as amended by CGD 88–002A, 55 FR 18583, May 2, 1990]

§ 151.67 Operating requirements: Discharge of plastic prohibited.

No person on board any ship may discharge into the sea, or into the navigable waters of the United States, plastic or garbage mixed with plastic, including, but not limited to, synthetic ropes, synthetic fishing nets, and plastic garbage bags. All garbage containing plastics requiring disposal must be discharged ashore or incinerated.

[CGD 88–002, 54 FR 18405, Apr. 28, 1989, as amended by CGD 88–002A, 55 FR 18583, May 2, 1990]

§ 151.69 Operating requirements: Discharge of garbage outside special areas.

(a) When operating outside of a special area specified in § 151.53, no person may discharge, into the sea, garbage that is separated from plastic, if the distance from nearest land is less than—

(1) 25 nautical miles for dunnage, lining and packing materials that float; or

(2) 12 nautical miles for victual wastes and all other garbage including paper products, rags, glass, metal, bottles, crockery and similar refuse, except that, such garbage may be discharged outside of three nautical miles from nearest land after it has been passed through a grinder or comminuter specified in § 151.75.

(b) Mixtures of garbage having different discharge requirements under paragraph (a)(1) or (a)(2) of this section must be—

(1) Retained on board for later disposal ashore; or

(2) Discharged in accordance with the more stringent requirement prescribed by paragraph (a)(1) or (a)(2) of this section.

§ 151.71 Operating requirements: Discharge of garbage within special areas.

(a) When a ship is located in a special area referenced in § 151.53 of this part, no person may discharge garbage from the ship, except as allowed in paragraph (b) or (c) in this section.

(b) Except as provided in paragraph (c) of this section, disposal into the sea of victual waste must be made as far as practicable from land but, in any case, not less than 12 nautical miles from the nearest land.

(c) Disposal into the Wider Caribbean region of victual wastes which have been passed through a comminuter or grinder shall be made as far as practicable from land but, in any case, not less than 3 nautical miles from the nearest land. Such comminuted or ground food wastes shall be capable of passing through a screen with opening no greater than 25 millimeters.

[CGD 94–056, 60 FR 43378, Aug. 21, 1995]

§ 151.73 Operating requirements: Discharge of garbage from fixed or floating platforms.

(a) Except as allowed in paragraph (b) of this section, no person may discharge garbage from—

(1) A fixed or floating platform engaged in the exploration, exploitation or associated offshore processing of seabed mineral resources; or

(2) Any ship within 500 meters (1650 feet) of such platforms.

(b) Victual waste may be discharged into the sea from a ship or fixed or floating platform regulated by paragraph (a) of this section if—

(1) It passes through a comminuter or grinder meeting § 151.75; and

(2) That ship or fixed or floating platform is beyond 12 nautical miles from nearest land.

§ 151.75 Grinders or comminuters.

Each grinder or comminuter used to discharge garbage in accordance with § 151.69(a)(2) or § 151.73(b)(1), must be capable of processing garbage so that it passes through a screen with openings no greater than 25 millimeters (one inch).

§ 151.77 Exceptions for emergencies.

Sections 151.67, 151.69 and 151.71 do not apply to the following:

(a) Discharges of garbage from a ship for the purpose of securing the safety of the ship and those on board or saving life at sea.

(b) The escape of garbage resulting from damage to a ship or its equipment, if all reasonable precautions have been taken before and after the occurrence of the damage, to prevent or minimize the escape.

(c) The accidental loss of synthetic fishing nets, provided all reasonable precautions have been taken to prevent such loss.

[CGD 88–002, 54 FR 18405, Apr. 28, 1989, as amended by CGD 88–002A, 55 FR 18583, May 2, 1990; CGD 90–054, 56 FR 19578, Apr. 29, 1991]

§ 151.79 Operating requirements: Discharge of sewage within Antarctica.

(a) A vessel certified to carry more than 10 persons must not discharge untreated sewage into the sea within 12 nautical miles of Antarctic land or ice shelves; beyond such distance, sewage stored in a holding tank must not be discharged instantaneously but at a moderate rate and, where practicable, while the ship is en route at a speed of no less than 4 knots. For purposes of this section, ''sewage'' means:

(1) Drainage and other wastes from any form of toilets, urinals, and WC scuppers;

(2) Drainage from medical premises (dispensary, sick bay, etc.) via wash basins, wash tubs, and scuppers located in such premises;

(3) Drainage from spaces containing living animals; or

(4) Other waste waters when mixed with the drainages defined above.

(b) Paragraph (a) of this section does not apply to a warship, naval auxiliary, or other ship owned or operated by the United States and used only in government non-commercial service.

(c) Paragraph (a) of this section does not apply in cases of an emergency relating to the safety of a ship and those on board or saving life at sea. Notice of an activity, otherwise prohibited under paragraph (a) of this section, undertaken in case of an emergency shall be reported immediately to the National Response Center (NRC) toll free number 800–424–8802.

[CGD 97–015, 62 FR 18045, Apr. 14, 1997]

APPENDIX A TO §§ 151.51 THROUGH 151.77—SUMMARY OF GARBAGE DISCHARGE RESTRICTIONS

Garbage Type	All Vessels Except Fixed or Floating Platforms and Associated Vessels		Fixed or Floating Platforms & Assoc. Vessels [3] (33 CFR 151.73)
	Outside special areas (33 CFR 151.69)	In special areas [2] (33 CFR 151.71)	
Plastics—includes synthetic ropes and fishing nets and plastic bags.	Disposal prohibited (33 CFR 151.67).	Disposal prohibited (33 CFR 151.67).	Disposal prohibited (33 CFR 151.67).
Dunnage, lining and packing materials that float.	Disposal prohibited less than 25 miles from nearest land and in the navigable waters of the U.S.	Disposal prohibited (33 CFR 151.71).	Disposal prohibited.
Paper, rags, glass, metal bottles, crockery and similar refuse.	Disposal prohibited less than 12 miles from nearest land and in the navigable waters of the U.S.	Disposal prohibited (33 CFR 151.71).	Disposal prohibited.
Paper, rags, glass, etc. comminuted or ground.[1]	Disposal prohibited less than 3 miles from nearest land and in the navigable waters of the U.S.	Disposal prohibited (33 CFR 151.71).	Disposal prohibited.
Victual waste not comminuted or ground.	Disposal prohibited less than 12 miles from nearest land and in the navigable waters of the U.S.	Disposal prohibited less than 12 miles from nearest land.	Disposal prohibited.

Garbage Type	All Vessels Except Fixed or Floating Platforms and Associated Vessels		Fixed or Floating Platforms & Assoc. Vessels [3] (33 CFR 151.73)
	Outside special areas (33 CFR 151.69)	In special areas [2] (33 CFR 151.71)	
Victual waste comminuted or ground.[1]	Disposal prohibited less than 3 miles from nearest land and in the navigable waters of the U.S.	Disposal prohibited less than 12 miles from nearest land.	Disposal prohibited less than 12 miles from nearest land and in the navigable waters of the U.S.
Mixed garbage types.[4]	See Note 4.	See Note 4.	See Note 4.

Note 1: Comminuted or ground garbage must be able to pass through a screen with a mesh size no larger than 25 mm. (1 inch) (33 CFR 151.75)

Note 2: Special areas under Annex V are the Mediterranean, Baltic, Black, Red, and North Seas areas and the Gulfs area. (33 CFR 151.53)

Note 3: Fixed or floating platforms and associated vessels includes all fixed or floating platforms engaged in exploration, exploitation or associated offshore processing of seabed mineral resources, and all ships within 500m of such platforms.

Note 4: When garbage is mixed with other harmful substances having different disposal or discharge requirements, the more stringent disposal restrictions shall apply.

[CGD 88–002, 54 FR 18405, Apr. 28, 1989, as amended by CGD 90–054, 56 FR 19578, Apr. 29, 1991]

Subpart B—Transportation of Municipal and Commercial Waste

AUTHORITY: 33 U.S.C. 2602; 49 CFR 1.46.

SOURCE: CGD 89–014, 54 FR 22548, May 24, 1989, unless otherwise noted.

§ 151.1000 Purpose.

The purpose of this subpart is to implement the permit provisions of the shore Protection Act of 1988, (33 U.S.C. 2601 *et seq.*).

§ 151.1003 Applicability.

(a) Except as provided by paragraph (b) of this section, this subpart applies to each vessel whose purpose is the transportation of municipal or commercial waste in coastal waters.

(b) This subpart does not apply to public vessels.

§ 151.1006 Definitions.

As used in this subpart—

Coastal Waters means—

(1) The territorial sea of the United States;

(2) The Great Lakes and their connecting waters;

(3) The marine and estuarine waters of the United States up to the head of tidal influence; and

(4) The Exclusive Economic Zone as established by Presidential Proclamation Number 5030, dated March 10, 1983.

NOTE: The Exclusive Economic Zone extends from the baseline of the territorial sea of the United States seaward 200 miles.

Municipal and commercial waste means solid waste as defined in section 1004 of the Solid Waste Disposal Act (42 U.S.C. 6903) except–

(1) Solid waste identified and listed under section 3001 of the Solid Waste Disposal Act (42 U.S.C. 6921);

(2) Waste generated by a vessel during normal operations;

(3) Debris solely from construction activities;

(4) Sewage sludge subject to regulation under title I of the Marine Protection, Research, and Sanctuaries Act of 1972 (33 U.S.C. 1401 *et seq.*); and

(5) Dredge or fill material subject to regulation under title I of the Marine Protection, Research and Sanctuaries Act of 1972 (33 U.S.C. 1401 *et seq.*), the Federal Water Pollution Control Act (33 U.S.C. 1251 *et seq.*), or the Rivers and Harbors Appropriation Act of 1899 (33 U.S.C. 401 *et seq.*).

Public vessel means a vessel that—

(1) Is owned, or demise chartered, and operated by the United States Government or a government of a foreign country; and

(2) Is not engaged in commercial service.

Vessel means every description of watercraft or other artifical contrivance used, or capable of being used, as a means of transportation on water.

§ 151.1009 Transportation of municipal or commercial waste.

A vessel may not transport municipal or commercial waste in coastal waters without—

(a) A conditional permit to transport municpal or commercial waste issued under this subpart; and

(b) Displaying a number in accordance with §151.1024.

[CGD 89–014, 54 FR 22548, May 24, 1989; CGD 89–014, 54 FR 24078, June 5, 1989]

§151.1012 Applying for a conditional permit.

(a) The owner or operator of each vessel to which this subpart applies shall apply by letter for a conditional permit required by §151.1009. Applications must be submitted to Commandant (G–MOC), U.S. Coast Guard Headquarters, 2100 Second Street SW., Washington, DC 20593–0001, Attn: Shore Protection Act Desk and include the following:

(1) The name, address, and telephone number of the vessel owner and operator.

(2) The vessel's name and official number, if any.

(3) The vessel's area of operation.

(4) The vessel's transport capacity.

(5) A history of the types of cargo transported by the vessel during the previous year, including identifying the type of municipal or commercial waste transported as—

(i) Municipal waste;

(ii) Commercial waste;

(iii) Medical waste; or

(iv) Waste of another character.

(6) The types of cargo to be transported by the vessel during the effective period of the conditional permit, including identifying the type of municipal or commercial waste as it is identified in paragraphs (a)(5)(i) through (iv) of this section.

(7) A statement of whether the application for a conditional permit is for a single voyage, a short term operation or a continuing operation. If the application is for a single voyage or a short term operation, the statement must include the duration of the voyage or operation.

(8) An acknowledgment that certifies as to the truthfulness and accuracy of the information provided.

(b) The owner or operator under paragraph (a) of this section shall provide any additional information the Coast Guard may require.

[CGD 89–014, 54 FR 22548, May 24, 1989, as amended by CGD 96–026, 61 FR 33665, June 28, 1996]

§151.1015 Issuing or denying the issuance of a conditional permit.

(a) After reviewing the application made under §151.1012, the Coast Guard either—

(1) Issues the conditional permit for a vessel under this section; or

(2) Denies the issuance of the conditional permit to the vessel in accordance with paragraph (c) of this section. On denying the issuance of the permit, the Coast Guard notifies the applicant of the—

(i) Denial and the reason for the denial; and

(ii) Procedures under §151.1021 for appealing the denial.

(b) Each conditional permit issued under this section is effective—

(1) On the date it is issued; and

(2) Until the expiration date stated on the conditional permit unless it is—

(i) Withdrawn under §151.1018;

(ii) Terminated because—

(A) The vessel is sold; or

(B) This subpart no longer applies to the vessel.

(c) The Coast Guard may deny the issuance of a conditional permit if—

(i) The application does not contain the information required under §151.1012; or

(ii) There is reason to believe that the information contained on the application is not true and correct.

§151.1018 Withdrawal of a conditional permit.

(a) The Coast Guard may withdraw a conditional permit if the Administrator of the EPA requests withdrawal because the Administrator has determined that the owner or operator of the vessel has a record or a pattern of serious violations of—

(1) Subtitle A of the Shore Protection Act of 1988 (33 U.S.C. 2601 *et seq.*);

(2) The Solid Waste Disposal Act (42 U.S.C. 6901 *et seq.*);

(3) The Marine Protection, Research, and Sanctuaries Act of 1972 (33 U.S.C. 1401 *et seq.*);

(4) The Rivers and Harbors Appropriations Act of 1899 (33 U.S.C. 1401 *et seq.*); or

(5) The Federal Water Pollution Control Act (33 U.S.C. 1251 *et seq.*).

(b) Upon reaching a determination to withdraw a conditional permit, the

Coast Guard notifies the owner or operator of—

(1) The withdrawal and the reason for the withdrawal;

(2) The procedures for appealing the withdrawal.

(c) After receiving the notice under paragraph (b) of this section, the owner or operator shall ensure that—

(1) The vessel immediately ceases transporting municipal or commercial waste and the marking required by § 151.1024 is removed; and

(2) The conditional permit is returned to the Coast Guard within 5 days after receiving the notice.

§ 151.1021 Appeals.

(a) Any person directly affected by an action taken under this subpart may request reconsideration by the Coast Guard officer responsible for that action.

(b) The person affected who is not satisfied with a ruling after having it reconsidered under paragraph (a) of this section may—

(1) Appeal that ruling in writing within 30 days after the ruling to the Assistant Commandant for Marine Safety and Environmental Protection, U.S. Coast Guard, Washington, DC 20593–0001; and

(2) Supply supporting documentation and evidence that the appellant wishes to have considered.

(c) After reviewing the appeal submitted under paragraph (b) of this section, the Assistant Commandant for Marine Safety and Environmental Protection issues a ruling which is final agency action.

(d) If the delay in presenting a written appeal has an adverse impact on the operations of the appellent, the appeal under paragraph (b) of this section—

(1) May be presented orally; and

(2) Must be submitted in writing within five days after the oral presentation—

(i) With the basis for the appeal and a summary of the material presented orally; and

(ii) To the same Coast Guard official who heard the oral presentation.

[CGD 89–014, 54 FR 22548, May 24, 1989, as amended by CGD 96–026, 61 FR 33665, June 28, 1996; CGD 97–023, 62 FR 33363, June 19, 1997]

§ 151.1024 Display of number.

(a) The owner or operator of each vessel under this subpart must ensure that the vessel number stated on the conditional permit issued under § 151.1015 is displayed so that it—

(1) Is clearly legible;

(2) Has a contrasting background;

(3) Is readily visible from either side of the vessel; and

(4) Is in block figures that are at least 18 inches in height.

(b) No person may tamper with or falsify a number required under this section.

Subpart C—Ballast Water Management for Control of Nonindigenous Species in the Great Lakes and Hudson River

AUTHORITY: 16 U.S.C. 4711; 49 CFR 1.46.

SOURCE: CGD 91–066, 58 FR 18334, Apr. 8, 1993, unless otherwise noted.

§ 151.1500 Purpose.

The purpose of this subpart is to implement the provisions of the Nonindigenous Aquatic Nuisance Prevention and Control Act of 1990 (16 U.S.C. 4701 *et seq.*).

§ 151.1502 Applicability.

This subpart applies to each vessel that carries ballast water and that after operating on the waters beyond the Exclusive Economic Zone during any part of its voyage enters the Snell Lock at Massena, New York, or navigates north of the George Washington Bridge on the Hudson River, regardless of other port calls in the United States or Canada during that voyage.

[CGD 94–003, 59 FR 67634, Dec. 30, 1994]

§ 151.1504 Definitions.

The following terms are defined as used in this subpart.

Ballast water means any water and suspended matter taken on board a vessel to control or maintain, trim, draught, stability, or stresses of the vessel, regardless of how it is carried.

Ballast tank means any tank or hold on a vessel used for carrying ballast water, whether or not the tank or hold was designed for that purpose.

Captain of the Port (COTP) means the Coast Guard officer designated as COTP of either the Buffalo, NY, Marine Inspection Zone and Captain of the Port Zone or the New York, NY, Captain of the Port Zone described in part 3 of this chapter or an official designated by the COTP.

Commandant means the Commandant of the Coast Guard or an authorized representative.

Exclusive Economic Zone (EEZ) means the area established by Presidential Proclamation Number 5030, dated March 10, 1983, (48 FR 10605, 3 CFR, 1983 Comp., p. 22), which extends from the base line of the territorial sea of the United States seaward 200 miles, and the equivalent zone of Canada.

Environmentally sound method means methods, efforts, actions, or programs, either to prevent introductions or to control infestations of aquatic nuisance species, that minimize adverse impacts to the structure and function of an ecosystem, minimize adverse effects on non-target organisms and ecosystems, and that emphasize integrated pest management techniques and non-chemical measures.

Great Lakes means Lake Ontario, Lake Erie, Lake Huron (including Lake Saint Clair), Lake Michigan, Lake Superior, and the connecting channels (Saint Mary's River, Saint Clair River, Detroit River, Niagara River, and Saint Lawrence River to the Canadian border), and includes all other bodies of water within the drainage basin of such lakes and connecting channels.

Port means a terminal or group of terminals or any place or facility that has been designated as a port by the COTP.

Sediments means any matter settled out of ballast water within a vessel.

Voyage means any transit by a vessel destined for the Great Lakes or the Hudson River, north of the George Washington Bridge, from a port or place outside of the EEZ, including intermediate stops at a port or place within the EEZ.

[CGD 91–066, 58 FR 18334, Apr. 8, 1993, as amended by CGD 94–003, 59 FR 67634, Dec. 30, 1994; USCG 1998–3423, 64 FR 26682, May 17, 1999]

§ 151.1506 Restriction of operation.

No vessel subject to the requirements of this subpart may be operated in the Great Lakes or the Hudson River, north of the George Washington Bridge, unless the master of the vessel has certified, in accordance with § 151.1516, that the requirements of this subpart have been met.

[CGD 94–003, 59 FR 67634, Dec. 30, 1994]

§ 151.1508 Revocation of clearance.

A COTP may request the District Director of Customs to withhold or revoke the clearance required by 46 U.S.C. app. 91 for a vessel subject to this subpart, the owner or operator of which is not in compliance with the requirements of this subpart.

§ 151.1510 Ballast water management.

(a) The master of each vessel subject to this subpart shall employ one of the following ballast water management practices:

(1) Carry out an exchange of ballast water on the waters beyond the EEZ, in a depth exceeding 2000 meters, prior to entry into the Snell Lock, at Massena, New York, or prior to navigating on the Hudson River, north of the George Washington Bridge, such that, at the conclusion of the exchange, any tank from which ballast water will be discharged contains water with a minimum salinity level of 30 parts per thousand.

(2) Retain the vessel's ballast water on board the vessel. If this method of ballast water management is employed, the COTP may seal any tank or hold containing ballast water on board the vessel for the duration of the voyage within the waters of the Great Lakes or the Hudson River, north of the George Washington Bridge.

(3) Use an alternative environmentally sound method of ballast water management that has been submitted to, and approved by, the Commandant prior to the vessel's voyage. Requests for approval of alternative ballast water management methods must be submitted to the Commandant (G–M), U.S. Coast Guard Headquarters, 2100 Second Street SW., Washington, DC 20593–0001.

(b) No master of a vessel subject to this subpart shall separately discharge sediment from tanks or holds containing ballast water unless it is disposed of ashore in accordance with local requirements.

(c) Nothing in this subpart authorizes the discharge of oil or noxious liquid substances (NLSs) in a manner prohibited by United States or international laws or regulations. Ballast water carried in any tank containing a residue of oil, NLSs, or any other pollutant must be discharged in accordance with the applicable regulations. Nothing in this subpart affects or supersedes any requirement or prohibitions pertaining to the discharge of ballast water into the waters of the United States under the Federal Water Pollution Control Act (33 U.S.C. 1251 *et seq.*).

[CGD 91–066, 58 FR 18334, Apr. 8, 1993, as amended by CGD 94–003, 59 FR 67634, Dec. 30, 1994]

§ 151.1512 Vessel safety.

Nothing in this subpart relieves the master of the responsibility for ensuring the safety and stability of the vessel or the safety of the crew and passengers, or any other responsibility.

§ 151.1514 Ballast water management alternatives under extraordinary conditions.

The master of any vessel subject to this subpart who, due to weather, equipment failure, or other extraordinary conditions, is unable to effect a ballast water exchange before entering the EEZ, must employ another method of ballast water management listed in § 151.1510, or request from the COTP permission to exchange the vessel's ballast water within an area agreed to by the COTP at the time of the request and must discharge the vessel's ballast water within that designated area.

§ 151.1516 Compliance monitoring.

(a) The master of each vessel subject to this subpart shall provide, upon request, the following information, in written form, to the COTP:

(1) The vessel's name, port of registry, and official number or call sign.

(2) The name of the vessel's owner(s).

(3) Whether ballast water is being carried.

(4) The original location and salinity, if known, of ballast water taken on, before an exchange.

(5) The location, date, and time of any ballast water exchange.

(6) The salinity of any ballast water to be discharged into the territorial waters of the United States.

(7) The intended discharge port for ballast water and location for disposal of sediment carried upon entry into the territorial waters of the United States, if ballast water or sediment are to be discharged.

(8) The signature of the master attesting to the accuracy of the information provided and certifying compliance with the requirements of this subpart.

(b) The COTP may take samples of ballast water to assess the compliance with, and the effectiveness of, this subpart.

Subpart D—Ballast Water Management for Control of Nonindigenous Species in Waters of the United States

AUTHORITY: 16 U.S.C. 4711; 49 CFR 1.46.

SOURCE: USCG 1998–3423, 64 FR 26682, May 17, 1999, unless otherwise noted.

§ 151.2000 What is the purpose of this subpart?

This subpart implements the provisions of the Nonindigenous Aquatic Nuisance Prevention and Control Act of 1990 (NANPCA) (16 U.S.C. 4701–4751), as amended by the National Invasive Species Act of 1996 (NISA).

§ 151.2005 To which vessels does this subpart apply?

(a) Sections 151.2000 through 151.2035(a) of this subpart apply to all vessels, U.S. and foreign, equipped with ballast tanks that operate in the waters of the United States.

(b) Sections 151.2035(b) through 151.2065 apply to all vessels, U.S. and foreign, carrying ballast water into the waters of the United States after operating beyond the exclusive economic zone, except those vessels exempted in §§ 151.2010 and 151.2015.

§151.2010 Which vessels are exempt from the mandatory requirements?

Four types of vessels are exempt from the requirements in §§151.2040 and 151.2045:

(a) A crude oil tanker engaged in the coastwise trade.

(b) A passenger vessel equipped with a functioning treatment system designed to kill aquatic organisms in the ballast water. The treatment system must operate as designed.

(c) A Department of Defense or Coast Guard vessel subject to the requirements of section 1103 of the Act, or any vessel of the Armed Forces, as defined in the Federal Water Pollution Control Act (33 U.S.C. 1322(a)) that is subject to the ''Uniform National Discharge Standards for Vessels of the Armed Forces'' (33 U.S.C. 1322(n)).

(d) A vessel that will discharge ballast water or sediments only at the same location where the ballast water or sediments originated. The ballast water or sediments must not mix with ballast water or sediments from areas other than the high seas.

§151.2015 Is a vessel in innocent passage exempt from the mandatory requirements?

A foreign vessel merely traversing the territorial sea of the United States (i.e., not entering or departing a U.S. port, or not navigating the internal waters of the U.S.) is exempt from the requirements of §§151.2040 and 151.2045, however such vessels are requested not to discharge ballast water into the waters of the United States unless they have followed the voluntary guidelines of §151.2035.

§151.2020 To what ballast water does this subpart apply?

This subpart applies to all ballast water and associated sediments taken on a vessel in areas—

(a) Less than 200 nautical miles from any shore, or

(b) With water that is less than 2,000 meters (6,560 feet,1,093 fathoms) deep.

§151.2025 What definitions apply to this subpart?

(a) Unless otherwise stated in this section, the definitions in 33 CFR 151.1504, 33 CFR 160.203, and the United Nations Convention on the Law of the Sea apply to this part.

(b) As used in this part—

ANSTF means the Aquatic Nuisance Species Task Force mandated under the Nonindigenous Aquatic Nuisance Prevention and Control Act of 1990 (NANPCA).

Captain of the Port (COTP) means the Coast Guard officer designated as the COTP, or a person designated by that officer, for the COTP zone covering the first U.S. port of destination. These COTP zones are listed in 33 CFR part 3.

Exchange means to replace the water in a ballast tank using one of the following methods:

(a) *Flow through exchange* means to flush out ballast water by pumping in mid-ocean water at the bottom of the tank and continuously overflowing the tank from the top until three full volumes of water has been changed—to minimize the number of original organisms remaining in the tank.

(2) *Empty/refill exchange* means to pump out the ballast water taken on in ports, estuarine, or territorial waters until the tank is empty, then refilling it with mid-ocean water; masters/operators should pump out as close to 100 percent of the ballast water as is safe to do so.

IMO guidelines mean the Guidelines for the Control and Management of Ships' Ballast Water to Minimize the Transfer of Harmful Aquatic Organisms and Pathogens (IMO Resolution A.868 (20), adopted November 1997).

NANCPA means the Nonindigenous Aquatic Nuisance Prevention and Control Act of 1990.

NBIC means the National Ballast Water Information Clearinghouse operated by the Coast Guard and the Smithsonian Environmental Research Center as mandated under NISA.

NISA means the National Invasive Species Act of 1996, which reauthorized and amended NANCPA.

United States means the States, the District of Columbia, the Commonwealth of Puerto Rico, Guam, American Samoa, the Virgin Islands, and the Trust Territory of the Pacific Islands.

Voyage means any transit by a vessel destined for any United States port from a port or place outside of the EEZ, including intermediate stops at a

port or place within the EEZ. For the purpose of this rule, a transit by a vessel from a United States port to any other United States port, if at any time the vessel operates outside the EEZ or equivalent zone of Canada, is also considered a voyage.

Waters of the United States means waters subject to the jurisdiction of the United States as defined in 33 CFR § 2.05–30, including the navigable waters of the United States. For this regulation, the navigable waters include the territorial sea as extended to 12 nautical miles from the baseline, pursuant to Presidential Proclamation No. 5928 of December 27, 1988.

§ 151.2030 Who is responsible for determining when to use the safety exemption?

(a) The master, operator, or person-in-charge of a vessel is responsible for the safety of the vessel, its crew, and its passengers.

(b) The master, operator, or person-in-charge of a vessel is not required to conduct a ballast water management practice (including exchange), if the master decides that the practice would threaten the safety of the vessel, its crew, or its passengers because of adverse weather, vessel design limitations, equipment failure, or any other extraordinary conditions. If the master uses this section, and the—

(1) Vessel is on a voyage to the Great Lakes or Hudson River, the vessel must comply with the requirements of § 151.1514 of subpart C of this part (Ballast water management alternatives under extraordinary conditions); or

(2) Vessel is on a voyage to any port other than the Great Lakes or Hudson River, the vessel shall not be required to perform a ballast water management practice which the master has found to threaten the safety of the vessel, its crew, or its passengers because of adverse weather, vessel design limitations, equipment failure, or any other extraordinary conditions.

(c) Nothing in this subpart relieves the master, operator, or person-in-charge of a vessel, of the responsibility for ensuring the safety and stability of the vessel or the safety of the crew and passengers, or any other responsibility.

§ 151.2035 What are the voluntary ballast water management guidelines?

(a) Masters, owners, operators, or persons-in-charge of all vessels equipped with ballast water tanks that operate in the waters of the United States are requested to take the following voluntary precautions to minimize the uptake and the release of harmful aquatic organisms, pathogens, and sediments:

(1) Avoid the discharge or uptake of ballast water in areas within or that may directly affect marine sanctuaries, marine preserves, marine parks, or coral reefs.

(2) Minimize or avoid uptake of ballast water in the following areas and situations:

(i) Areas known to have infestations or populations of harmful organisms and pathogens (e.g., toxic algal blooms).

(ii) Areas near sewage outfalls.

(iii) Areas near dredging operations.

(iv) Areas where tidal flushing is known to be poor or times when a tidal stream is known to be more turbid.

(v) In darkness when bottom-dwelling organisms may rise up in the water column.

(vi) Where propellers may stir up the sediment.

(3) Clean the ballast tanks regularly to remove sediments. Clean the tanks in mid-ocean or under controlled arrangements in port, or at dry dock. Dispose of your sediments in accordance with local, State, and Federal regulations.

(4) Discharge only the minimal amount of ballast water essential for vessel operations while in the waters of the United States.

(5) Rinse anchors and anchor chains when you retrieve the anchor to remove organisms and sediments at their place of origin.

(6) Remove fouling organisms from hull, piping, and tanks on a regular basis and dispose of any removed substances in accordance with local, State and Federal regulations.

(7) Maintain a ballast water management plan that was developed specifically for the vessel.

(8) Train the master, operator, person-in-charge, and crew, on the application of ballast water and sediment

management and treatment procedures.

(b) In addition to the provisions of §151.2035(a), you (the master, operator, or person-in-charge of a vessel) are requested to employ at least one of the following ballast water management practices, if you carry ballast water into the waters of the United States after operating beyond the EEZ:

(1) Exchange ballast water beyond the EEZ, from an area no less than 200 nautical miles from any shore, and in waters more than 2,000 meters (6,560 feet, 1,093 fathoms) deep, before entering waters of the United States.

(2) Retain the ballast water on board the vessel.

(3) Use an alternative environmentally sound method of ballast water management that has been approved by the Coast Guard before the vessel begins the voyage. Submit the requests for approval of alternative ballast water management methods to the Commandant (G–MSO–4), U.S. Coast Guard Headquarters, 2100 Second Street SW., Washington, DC 20593–0001. The phone number is 202–267–0500.

(4) Discharge ballast water to an approved reception facility.

(5) Under extraordinary conditions, conduct a ballast water exchange within an area agreed to by the COTP at the time of the request.

§151.2040 What are the mandatory requirements for vessels carrying ballast water into the waters of the United States after operating beyond the Exclusive Economic Zone (EEZ)?

(a) The master, owner, operator, person-in-charge of a vessel bound for the Great Lakes or Hudson River, which has operated beyond the EEZ during any part of its voyage, regardless of intermediate ports of calls within the waters of the United States or Canada, must comply with paragraphs (c) through (f) of this section, all of §151.2045, and with the provisions of this part 151 subpart C.

(b) A vessel engaged in the foreign export of Alaskan North Slope Crude Oil must comply with paragraphs (c) through (f) of this section, all of §151.2045, and with the provisions of 15 CFR 754.2(j)(1)(iii). That section (15 CFR 754.2(j)(iii)) requires a mandatory program of deep water ballast exchange (i.e., at least 2,000 meters water depth and recordkeeping), unless doing so would endanger the safety of the vessel or crew.

(c) The master, owner, operator, agent, or person-in-charge of a vessel carrying ballast water into the waters of the United States after operating beyond the EEZ, unless specifically exempted by §151.2010 or §151.2015, must provide the information required by §151.2045 in electronic or written form to the Commandant, U.S. Coast Guard or the appropriate COTP as follows:

(1) *For a United States or Canadian Flag vessel bound for the Great Lakes.* You must fax the required information to the COTP Buffalo 315–764–3283 at least 24 hours before the vessel arrives in Montreal, Quebec.

(2) *For a foreign flagged vessel bound for the Great Lakes.* You must—

(i) Fax the required information to the COTP Buffalo 315–764–3283 at least 24 hours before the vessel arrives in Montreal, Quebec; or

(ii) Complete the ballast water information section of the St. Lawrence Seaway required ''Pre-entry Information from Foreign Flagged Vessels Form'' and submit it in accordance with the applicable Seaway notice.

(3) *For a vessel bound for the Hudson River north of the George Washington Bridge.* You must telefax the information to the COTP New York at 718–354–4249 before the vessel enters the waters of the United States (12 miles from the baseline).

(4) *For a vessel not addressed in paragraphs (c)(1), (c)(2), and (c)(3) of this section.* Before the vessel departs from the first port of call in the waters of the United States, you must—

(i) Mail the information to U.S. Coast Guard, c/o Smithsonian Environmental Research Center (SERC), P.O. Box 28, Edgewater, MD 21037–0028; or

(ii) Transmit the information electronically to the NBIC at www.serc.si.edu/invasions/ballast.htm; or

(iii) Fax the information to the Commandant, U.S. Coast Guard, c/o the NBIC at 301–261–4319.

(d) If the information submitted in accordance with paragraph (c) of this section changes, you must submit an

amended form before the vessel departs the waters of the United States.

(e) This subpart does not authorize the discharge of oil or noxious liquid substances (NLS) in a manner prohibited by United States or international laws or regulations. Ballast water carried in any tank containing a residue of oil, NLS, or any other pollutant must be discharged in accordance with the applicable regulations.

(f) This subpart does not affect or supersede any requirement or prohibition pertaining to the discharge of ballast water into the waters of the United States under the Federal Water Pollution Control Act (33 U.S.C. 1251 to 1376).

§ 151.2045 What are the mandatory recordkeeping requirements?

(a) The master, owner, operator, or person in charge of a vessel carrying ballast water into the waters of the United States after operating beyond the EEZ, unless specifically exempted by § 151.2010 or § 151.2015 shall keep in written form, records that include the following information (Note: Ballast tank is any tank or hold that carries ballast water regardless of design):

(1) *Vessel information*. Include the—

(i) Name;

(ii) International Maritime Organization (IMO) Number (official number if IMO number not issued);

(iii) Vessel type;

(iv) Owner or operator;

(v) Gross tonnage;

(vi) Call sign; and

(vii) Port of Registry (Flag).

(2) *Voyage information*. Include the date and port of arrival, vessel agent, last port and country of call, and next port and country of call.

(3) *Total ballast water information*. Include the total ballast water capacity, total volume of ballast water on board, total number of ballast water tanks, and total number of ballast water tanks in ballast. Use units of measurements such as metric tons (MT), cubic meters (m3), long tons (LT), and short tons (ST).

(4) *Ballast Water Management*. Include the total number of ballast tanks/holds that are to be discharged into the waters of the United States or to a reception facility. If an alternative ballast water management method is used, please note the number of tanks that were managed using an alternative method, as well as the type of method used. Indicate whether the vessel has a ballast water management plan and IMO guidelines on board, and whether the ballast water management plan is used.

(5) *Information on ballast water tanks that are to be discharged into the waters of the United States or to a reception facility*. Include the following:

(i) The origin of ballast water. This includes date(s), location(s), volume(s) and temperature(s) (If a tank has been exchanged, list the loading port of the ballast water that was discharged during the exchange.).

(ii) The date(s), location(s), volume(s), method, thoroughness (percentage exchanged if exchange conducted), sea height at time of exchange if exchange conducted, of any ballast water exchanged or otherwise managed.

(iii) The expected date, location, volume, and salinity of any ballast water to be discharged into the waters of the United States or a reception facility.

(6) *Discharge of sediment*. If sediment is to be discharged within the jurisdiction of the United States include the location of the facility where the disposal will take place.

(7) *Certification of accurate information*. Include the master, owner, operator, person in charge, or responsible officer's printed name, title, and signature attesting to the accuracy of the information provided and certifying compliance with the requirements of this subpart.

(8) *Change to previously submitted information*.

(i) Indicate whether the information is a change to information previously submitted for this voyage.

(ii) The master, owner, operator, or person in charge of a vessel subject to this section, must retain a signed copy of this information on board the vessel for 2 years.

(iii) The information required of this subpart may be used to satisfy the ballast water recordkeeping requirements for vessels subject to § 151.2040(a) and (b).

(iv) A sample form and the instructions for completing the form are in the appendix to this subpart. If you

complete the ''Ballast Water Reporting Form'' contained in the IMO Guidelines or complete the ballast water information section of the St. Lawrence Seaway required ''Pre-entry Information Flagged Vessels Form,'' then you have met the requirements of this section.

§ 151.2050 What methods are used to monitor compliance with this subpart?

(a) The COTP may take samples of ballast water and sediment, examine documents, and make other appropriate inquiries to assess the compliance of any vessel subject to this subpart.

(b) The master, owner, operator, or person in charge of a vessel subject to this section, shall make available to the COTP the records required by § 151.2045 upon request.

(c) The NBIC will compile the data obtained from submitted reports. This data will be used, in conjunction with existing databases on the number of vessel arrivals, to assess vessel reporting rates.

§ 151.2055 Where are the alternate exchange zones located? [Reserved]

§ 151.2060 What must each application for approval of an alternative compliance technology contain? [Reserved]

§ 151.2065 What is the standard of adequate compliance determined by the ANSTF for this subpart? [Reserved]

APPENDIX TO SUBPART D OF PART 151—BALLAST WATER REPORTING FORM AND INSTRUCTIONS FOR BALLAST WATER REPORTING FORM

INSTRUCTIONS FOR BALLAST WATER REPORTING FORM

(Please write in English and PRINT legibly.)

Is this an Amended Ballast Reporting Form?: Check Yes or No. Amendments should be submitted if there are any differences between actual ballast discharges and discharge information reported in a prior form. Please mark "Yes" if this form amends a previously submitted ballast reporting form.

SECTION 1. VESSEL INFORMATION

Vessel Name: Print the name of the vessel clearly.

IMO Number: Fill in identification number of the vessel used by the International Maritime Organization.

Owner: Write in the name of the registered owner(s) of the vessel. If under charter, enter Operator name.

Type: List specific vessel type. Use the following abbreviations: bulk (**bc**), roro (**rr**), container (**cs**), tanker (**ts**), passenger (**pa**), oil/bulk ore (**ob**), general cargo (**gc**), reefer (**rf**). Write out any additional vessel types.

GT: What is the Gross Tonnage of the vessel?

Call Sign: Write in the official call sign.

Flag: Fill in the full name of the country under whose authority the ship is operating. No abbreviations please.

SECTION 2. VOYAGE INFORMATION

Arrival Port: Write in the name of your first port of call after entering the U.S. EEZ or St. Lawrence Seaway. No abbreviations.

Arrival Date: Fill in the arrival date to the above port. Please use European date format (DDMMYY).

Agent: List agent used for current port.

Last Port: Fill in the last port at which the vessel called immediately before entering the U.S. EEZ. No abbreviations please.

Country of Last Port: Fill in the last country at which the vessel called immediately before entering the U.S. EEZ. No abbreviations please.

Next Port: Fill in the port at which the vessel will call immediately after departing the current port ("Current Port"="Arrival Port" above). No abbreviations please.

Country of Next Port: Fill in the country of "Next Port" at which the vessel will call immediately after current port. No abbreviations please.

SECTION 3. BALLAST WATER

Total Ballast Water on Board:

Volume: What was the total volume of ballast water on board upon arrival into the waters of U.S. EEZ? Do not count potable water.

Units: Please include volume units (m^3, MT, LT, ST).

Number of Tanks in Ballast: Count the number of ballast tanks and holds with ballast as vessel enters waters inside the United States EEZ.

Total Ballast Water Capacity:

Volume: What is the maximum volume of ballast water used when no cargo is on board?

Units: Please include volume units (m^3, MT, LT, ST).

Total Number of Tanks on Ship: Count all tanks and holds that can carry ballast water (do not include tanks that carry potable water).

SECTION 4. BALLAST WATER MANAGEMENT

Total No. of tanks to be discharged: Count only tanks and holds with ballast to be discharged into waters inside the United States EEZ or into an approved reception facility. Count all tanks and holds separately (e.g., port and starboard tanks should be counted separately).

Of tanks to be discharged, how many Underwent Exchange: Count all tanks that are to be discharged into waters of the United States or into an approved reception facility.

Of tanks to be discharged, how many Underwent Alternative Management: Count all tanks that are to be discharged into waters of the United States or an approved reception facility.

Please specify alternative method(s) used, if any: Specifically, describe methods used for ballast management.

If no ballast treatment conducted, state reason why not: This applies to all tanks and holds being discharged into waters of the

United States or into an approved reception facility.

Ballast Management Plan on board?: Is there a written document on board, specific to your vessel, describing the procedure for ballast management? This should include safety and exchange procedures (usually provided by vessel's owner or operator). Check Yes or No.

Management Plan implemented?: Do you follow the above management plan? Check Yes or No.

IMO Ballast Water Guidelines on board?: Is there a copy of the International Maritime Organization (IMO) Ballast Water Guidelines on board this vessel (i.e. "Guidelines for the Control and Management of Ship's Ballast Water to Minimize the Transfer Aquatic Organisms and Pathogens", [Res. A.868(20)])? Check Yes or No.

SECTION 5. BALLAST WATER HISTORY

(Record all tanks to be deballasted in port state of arrival: If none, go to #6)

Tanks/Holds: Please list all tanks and holds that you have discharged or plan to discharge into waters of the United States or

into an approved reception facility (write out, or use codes listed below table). Follow each tank across the page listing all source(s), exchange events, and/or discharge events separately. List each tank on a separate line. Port and starboard tanks with identical ballast water histories may be included on same line. Please use an additional page if necessary, being careful to include ship name, date, and IMO number at the top of each. For tanks with multiple sources: list 3 largest sources from last 30 days on separate lines. If more than 3 sources, include a 4th line for the respective tank(s) that indicated "Multiple" in port column and list the remaining tank volume not included in the 3 largest sources (i.e., total tank volume minus volume of the 3 largest sources). See example #1 on sample ballast reporting form.

-BW SOURCES

Date: Record date of ballast water uptake. Use European format (DDMMYY).

Port or latitude/longitude: Record location of ballast water uptake, no abbreviations for ports.

Volume: Record total volume of ballast water uptake, with volume units.

Temp: Record water temperature at time of ballast water uptake, in degrees Celsius (include units).

-BW MANAGEMENT PRACTICES-

Date: Date of ballast water management practice. If exchanges occurred over multiple days, list the day when exchanges were completed. Use European format (DDMMYY).

Endpoint or latitude/longitude: Report location of ballast water management practice. If an exchange occurred over an extended distance, list the end point latitude and longitude.

Volume: Report total volume of ballast water moved (i.e., gravitated and pumped into tanks, discharged to reception facility) during management practice , with units.

% Exch.: (Note: for effective flow through exchange, this value should be at least 300%).

$$\%\ Exchange = \frac{\text{Total Volume added by Refill or Flow Through}}{\text{Capacity of Ballast Tank or Hold}} \times (100\%)$$

Method: Indicate management method using code (ER = empty/refill, FT = flow through, ALT = alternative method).

Sea Ht . (m): Estimate the sea height in meters at the time of the ballast water exchange if this method was used. (Note: this is the combined height of the wind-seas and swell, and does not refer to water depth).

-BW DISCHARGES-

Date: Date of ballast water discharge. Use European format (DDMMYY).

Port or latitude/longitude: Report location of ballast water discharge, no abbreviations for ports.

Volume: Report volume of ballast water discharged, with units.

Salinity: Document salinity of ballast water at the time of discharge, with units (i.e., specific gravity (sg) or parts per thousand (ppt)).

SECTION 6. TITLE AND SIGNATURE

Responsible officer's name and title (printed) and signature: Print name and title, include signature.

BALLAST WATER REPORTING FORM

IS THIS AN AMENDED BALLAST REPORTING FORM? YES ☐ NO ☐

1. VESSEL INFORMATION	2. VOYAGE INFORMATION		3. BALLAST WATER USAGE AND CAPACITY
Vessel Name:	Arrival Port:		*Specify Units Below (m^3, MT, LT, ST)*
IMO Number:	Arrival Date:		Total Ballast Water on Board: Volume / Units / No. of Tanks in Ballast
Owner:	Agent:		
Type:	Last Port:	Country of Last Port:	
GT:			Total Ballast Water Capacity: Volume / Units / Total No. of Tanks on Ship
Call Sign:	Next Port:	Country of Next Port:	
Flag:			

4. BALLAST WATER MANAGEMENT Total No. Ballast Water Tanks to be discharged: ☐

Of tanks to be discharged, how many: Underwent Exchange: ☐ Underwent Alternative Management: ☐

Please specify alternative method(s) used, if any: _____

If no ballast treatment conducted, state reason why not: _____

Ballast management plan on board? YES ☐ NO ☐ Management plan implemented? YES ☐ NO ☐

IMO ballast water guidelines on board [res. A.868(20)]? YES ☐ NO ☐

5. BALLAST WATER HISTORY: Record all tanks to be deballasted in port state of arrival; IF NONE, GO TO #6 ***(Use additional sheets as needed)***

Tanks/ Holds List multiple sources/tanks separately	BW SOURCES				BW MANAGEMENT PRACTICES						BW DISCHARGES			
	DATE DD/MM/YY	PORT or LAT. LONG.	VOLUME (units)	TEMP (units)	DATE DD/MM/YY	ENDPOINT LAT. LONG.	VOLUME (units)	% Exch	METHOD (ER/FT/ ALT)	SEA HT. (m)	DATE DD/MM/YY	PORT or LAT. LONG.	VOLUME (units)	SALINITY (units)

Ballast Water Tank Codes: Forepeak = FP, Aftpeak = AP, Double Bottom = DB, Wing = WT, Topside = TS, Cargo Hold = CH, Other = O

6. RESPONSIBLE OFFICER'S NAME AND TITLE, PRINTED AND SIGNATURE:

Where to send this form.

Vessels bound for Great Lakes:

United States or Canadian Flag vessel bound for the Great Lakes

Fax the form to the COTP Buffalo **315-764-3283** at least 24 hours before the vessel arrives in Montreal, Quebec.

Any other Flag vessel bound for the Great Lakes

Fax the form to the COTP Buffalo **315-764-3283** at least 24 hours before the vessel arrives in Montreal, Quebec, or;

Complete the ballast water information section of the St. Lawrence Seaway required "Pre-entry Information from Foreign Flagged Vessels Form" and submit it in accordance with the applicable Seaway notice.

Vessels bound for the Hudson River North Of George Washington Bridge

Vessel bound for the Hudson River north of the George Washington Bridge

Fax the form to the COTP New York at **718-354-4249** before the vessel enters the waters of the United States (12 miles from the baseline).

Vessels bound for all other United States Ports

Vessel bound for all ports within the waters of the United States other than the Great Lakes or Hudson River north of the George Washington Bridge

Before the vessel departs from the first port of call in the waters of the United States send the form by one of the three following methods:

- Mail the form to the **U.S. Coast Guard, c/o Smithsonian Environmental Research Center (SERC), P.O. Box 28, Edgewater, MD 21037-0028**;
- Transmit the form electronically to the National Ballast Information Clearinghouse (NBIC) at **www.serc.si.edu\invasions\ballast.htm**); or
- Fax the form to the Commandant, U.S. Coast Guard, c/o the NBIC at **301-261-4319.**

If any information changes, send an amended form before the vessel departs the waters of the United States.

PART 153—CONTROL OF POLLUTION BY OIL AND HAZARDOUS SUBSTANCES, DISCHARGE REMOVAL

Subpart A—General

Sec.
153.101 Purpose.
153.103 Definitions.
153.105 FWPCA delegations and redelegation.
153.107 [Reserved]
153.109 CERCLA delegations.

Subpart B—Notice of the Discharge of Oil or a Hazardous Substance

153.201 Purpose.
153.203 Procedure for the notice of discharge.
153.205 Fines.

Subpart C—Removal of Discharged Oil

153.301 Purpose.
153.303 Applicability.
153.305 Methods and procedures for the removal of discharged oil.
153.307 Penalties.

Subpart D—Administration of the Pollution Fund

153.401 Purpose.
153.403 Applicability.
153.405 Liability to the pollution fund.
153.407 Payments or reimbursement from the pollution fund.
153.411 Procedures for payment of judgments.
153.413 Deposit of money into the fund.
153.415 Cost summary reports.
153.417 Reimbursement for actions under section 311(c) or 311(d) of the Act of the Intervention on the High Seas Act.

AUTHORITY: 14 U.S.C. 633; 33 U.S.C. 1321; 42 U.S.C. 9615; E.O. 12580, 3 C.F.R., 1987 Comp., p. 193; E.O. 12777, 3 C.F.R., 1991 Comp., p. 351; 49 CFR 1.45 and 1.46.

SOURCE: CGD 73–185, 41 FR 12630, Mar. 25, 1976, unless otherwise noted.

Subpart A—General

§ 153.101 Purpose.

The purpose of this part is to prescribe regulations concerning notification to the Coast Guard of the discharge of oil or hazardous substances as required by the Federal Water Pollution Control Act, as amended (FWPCA); the procedures for the removal of a discharge of oil; and the costs that may be imposed or reimbursed for the removal of a discharge of oil or hazardous substances under the FWPCA.

[CGD 84–067, 51 FR 17965, May 16, 1986]

§ 153.103 Definitions.

As used in this part:

(a) *Act* means the Federal Water Pollution Control Act, as amended (33 U.S.C. 1251 et seq.).

(b) *CERCLA* means the Comprehensive Environmental Response, Compensation, and Liability Act of 1980 (42 U.S.C. 9601 et seq.).

(c) *Chemical agents* means those elements, compounds, or mixtures that coagulate, disperse, dissolve, emulsify, foam, neutralize, precipitate, reduce, solubilize, oxidize, concentrate, congeal, entrap, fix, make the pollutant mass more rigid or viscous, or otherwise facilitate the mitigation of deleterious effects or removal of the pollutant from the water. The term ''chemical agents'' as used in this part includes dispersants, surface collecting agents, biological additives, burning agents, and sinking agents as defined in Subpart H of the National Contingency Plan.

(d) *Assistant Commandant for Marine Safety and Environmental Protection* means the Coast Guard Officer designated by the Commandant to assist and advise the Commandant on matters related to marine environmental response, port and environmental safety, and waterways management.

(e) *Coastal waters* means all U.S. waters subject to the tide, U.S. waters of the Great Lakes, specified ports and harbors on the inland rivers, waters of the contiguous zone, or other waters of the high seas subject to discharges in connection with activities under the Outer Continental Shelf Lands Act (43 U.S.C. 1331 et seq.) or the Deepwater Port Act of 1974 (33 U.S.C. 1501 et seq.), or which may affect natural resources belonging to, appertaining to, or under the exclusive management authority of the United States (including resources under the Magnuson Fishery Conservation and Management Act (16 U.S.C. 1801 et seq.)). These waters include those contained within the Exclusive

Economic Zone declared by Presidential Proclamation 5030 on March 10, 1983 (43 FR 10605).

NOTE: Coastal waters are those waters where the Coast Guard has the responsibility for providing On-Scene Coordinators under the National Contingency Plan. Specific dividing lines between coastal and inland waters, and the identification of specified ports and harbors on inland rivers, are contained in Regional Contingency Plans prepared pursuant to the National Contingency Plan.

(f) *Contiguous zone* means the entire zone established by the United States under Article 24 of the Convention on the Territorial Sea and the Contiguous Zone, as published in the June 1, 1972 issue of the FEDERAL REGISTER (37 FR 11906).

(g) *Discharge* includes, but is not limited to, any spilling, leaking, pumping, pouring, emitting, emptying, or dumping, but excludes (A) discharges in compliance with a permit under Section 402 of the Act, (B) discharges resulting from circumstances identified and reviewed and made part of the public record with respect to a permit issued or modified under Section 402 of the Act, and subject to a condition in such permit, and (C) continuous or anticipated intermittent discharges from a point source, identified in a permit or permit application under section 402 of the Act, which are caused by events occurring within the scope of relevant operating or treatment systems.

(h) *Hazardous substance* means any substance designated by the Administrator of the Environmental Protection Agency pursuant to section 311(b)(2) of the Act.

(i) *Inland waters* means all other waters of the U.S. not included in the definition of coastal waters.

NOTE: Inland waters are those waters where the Environmental Protection Agency has the responsibility for providing On-Scene Coordinators under the National Contingency Plan. Specific dividing lines between coastal and inland waters are contained in Regional Contingency Plans prepared pursuant to the National Contingency Plan.

(j) *Mechanical removal* means the use of pumps, skimmers, booms, earthmoving equipment, and other mechanical devices to contain the discharge of oil and to recover the discharge from the water or adjoining shorelines.

(k) *Navigable waters* means the waters of the United States as defined in paragraph 2.05–25(b) of this Chapter.

(l) *Offshore facility* means any facility of any kind located in, on, or under, any of the navigable waters of the United States, and any facility of any kind which is subject to the jurisdiction of the United States and is located in, on, or under any other waters, other than a vessel or a public vessel.

(m) *Oil* means oil of any kind or in any form, including but not limited to petroleum, fuel oil, sludge, oil refuse, and oil mixed with wastes other than dredged spoil.

(n) *On-Scene Coordinator* or *OSC* is the Federal official predesignated by the Environmental Protection Agency (EPA) or Coast Guard to coordinate and direct Federal removal efforts at the scene of an oil or hazardous substance discharge as prescribed in the National Oil and Hazardous Substances Pollution Contingency Plan (National Contingency Plan) as published in 40 CFR Part 300.

(o) *Onshore facility* means any facility (including, but not limited to, motor vehicles and rolling stock) of any kind located in, on, or under, any land within the United States other than submerged land.

(p) *Person* includes an individual, firm, corporation, association, and a partnership.

(q) *Pollution Fund* and *Fund* means the revolving fund established in the Treasury under the authority in section 311(k) of the Act to carry out the provisions of section 311 (c), (d), (i), and (l) of the Act.

(r) *Public vessel* means a vessel owned or bare-boat chartered and operated by the United States, or by a State or political subdivision thereof, or by a foreign nation, except when such vessel is engaged in commerce.

(s) *Remove* or *Removal* refers to removal of oil or hazardous substances from the waters and shorelines or the taking of such other actions as may be necessary to minimize or mitigate damage to the public health or welfare, including, but not limited to, fish, shellfish, wildlife, and public and private property, shorelines, and beaches.

(t) *Sorbent* means materials essentially inert and insoluble used to remove oil from water through a variety of sorption mechanisms. Examples include straw, expanded perlite, polyurethane foam, reclaimed paper fibers, and peat moss.

(u) *Such quantities as may be harmful* means those quantities of oil and any hazardous substances determined in accordance with the provisions of section 311(b)(4) of the Act.

NOTE: Regulations that relate to such quantities as may be harmful of oil are published in 40 CFR Part 110. Regulations that relate to such quantities as may be harmful (reportable quantities) of hazardous substances are published in 40 CFR Part 117 and also listed in 40 CFR Part 302.

(v) *United States* means the States, the District of Columbia, the Commonwealth of Puerto Rico, Guam, American Samoa, the Virgin Islands, and the Trust Territory of the Pacific Islands.

(w) *Vessel* means every description of watercraft or other artificial contrivance used, or capable of being used, as a means of transportation on water other than a public vessel.

[CGD 84–067, 51 FR 17965, May 16, 1986, as amended by CGD 88–052, 53 FR 25121, July 1, 1988; CGD 96–026, 61 FR 33665, June 28, 1996; CGD 97–023, 62 FR 33363, June 19, 1997]

§ 153.105 FWPCA delegations and redelegation.

The delegations and redelegations under the Federal Water Pollution Control Act (FWPCA) [33 U.S.C. 1321 *et seq.*] are published in § 1.01–80 and § 1.01–85, respectively, of this chapter.

[CGD 91–225, 59 FR 66485, Dec. 27, 1994]

§ 153.107 [Reserved]

§ 153.109 CERCLA delegations.

The delegations under the Comprehensive Environmental Response, Compensation, and Liability Act of 1980 (CERCLA) are published in § 1.01–70 of this chapter.

[CGD 83–009, 49 FR 575, Jan. 5, 1984]

Subpart B—Notice of the Discharge of Oil or a Hazardous Substance

§ 153.201 Purpose.

The purpose of this subpart is to prescribe the manner in which the notice required in section 311(b)(5) of the Act is to be given and to list the government officials to receive that notice.

§ 153.203 Procedure for the notice of discharge.

Any person in charge of a vessel or of an onshore or offshore facility shall, as soon as they have knowledge of any discharge of oil or a hazardous substance from such vessel or facility in violation of section 311(b)(3) of the Act, immediately notify the National Response Center (NRC), U.S. Coast Guard, 2100 Second Street, SW., Washington, DC 20593, toll free telephone number 800–424–8802 (in Washington, DC metropolitan area, (202) 267–2675). If direct reporting to the NRC is not practicable, reports may be made to the Coast Guard or EPA predesignated OSC for the geographic area where the discharge occurs. All such reports shall be promptly relayed to the NRC. If it is not possible to notify the NRC or the predesignated OSC immediately, reports may be made immediately to the nearest Coast Guard unit, provided that the person in charge of the vessel or onshore or offshore facility notifies the NRC as soon as possible.

NOTE: Geographical jurisdiction of Coast Guard and EPA OSC's are specified in the applicable Regional Contingency Plan. Regional Contingency Plans are available at Coast Guard District Offices and EPA Regional Offices as indicated in Table 2. Addresses and telephone numbers for these offices are listed in Table 1.

[CGD 84–067, 51 FR 17966, May 16, 1986, as amended by CGD 88–052, 53 FR 25121, July 1, 1988]

§ 153.205 Fines.

Section 311(b)(5) of the Act prescribes that any person who fails to notify the appropriate agency of the United States Government immediately of a

discharge is, upon conviction, fined in accordance with Title 18, U.S. Code, or imprisoned for not more than 5 years, or both.

[CGD 97–023, 62 FR 33364, June 19, 1997]

TABLE 1—ADDRESSES AND TELEPHONE NUMBERS OF COAST GUARD DISTRICT OFFICES AND EPA REGIONAL OFFICES

	Address	Telephone
EPA Regional Offices		
Region:		
I	John F. Kennedy Federal Bldg., Boston, MA 02203.	617–565–3715
II	26 Federal Plaza, New York, NY 10278.	212–264–2525
III	841 Chestnut Street, Philadelphia, PA 19107.	215–597–9800
IV	345 Courtland Street, NE, Atlanta, GA 30365.	404–347–4727
V	230 S. Dearborn Street, 13th Floor, Chicago, IL 60604.	312–353–2000
VI	1445 Ross Ave., 12th Floor, Suite 1200, Dallas, TX 75202.	214–655–6444
VII	726 Minnesota Avenue, Kansas City, KS 66101.	913–236–2800
VIII	999 18th St., Suite 500, Denver, CO 80202–2405.	303–293–1603
IX	215 Fremont Street, San Francisco, CA 94105.	415–974–8071
X	1200 6th Avenue, Seattle, WA 98101.	206–442–5810
Coast Guard District Offices		
District:		
1st	408 Atlantic Ave., Boston, MA 02110–2209.	617–223–8444
5th	Federal Bldg., 431 Crawford St., Portsmouth, VA 23705–5004.	757–398–6638
7th	Federal Bldg., Room 1221, 51 S.W. 1st Ave., Miami, FL 33130.	305–536–5651
8th	Hale Boggs Federal Bldg., 500 Camp St., New Orleans, LA 70130–3396.	504–589–6901
9th	1240 East 9th St., Cleveland, OH 44199.	216–522–3919
11th	Building 50–6, Coast Guard Island, Alameda, CA 94501.	510–437–2940
13th	Federal Bldg., 915 Second Ave., Seattle, WA 98174.	206–442–5850
14th	Prince Kalanianaole Federal Bldg., 300 Ala Moana Blvd., 9th Floor, Honolulu, HI 96850.	808–541–2114
17th	P.O Box 3–5000, Juneau, AK 99802.	907–586–7195

TABLE 2—STANDARD ADMINISTRATIVE REGIONS OF STATES AND CORRESPONDING COAST GUARD DISTRICTS AND EPA REGIONS

States and EPA region	Coast Guard district
Region I:	
Maine	1st
New Hampshire	1st
Vermont:	
All except Northwestern portion	1st
Northwestern portion	1st
Massachusetts	1st
Connecticut	1st
Rhode Island	1st
Region II:	
New York:	
Coastal area and Eastern portion	1st
Great Lakes area and other portions	9th
New Jersey:	
Upper portion	1st
Lower portion	5th
Puerto Rico	7th
Virgin Islands	7th
Region III:	
Pennsylvania:	
Eastern portion	5th
Great Lakes area	9th
Southwestern portion	8th
Maryland	5th
Delaware	5th
West Virginia	8th
Virginia	5th
District of Columbia	5th
Region IV:	
Kentucky	8th
Tennessee	8th
North Carolina	5th
South Carolina	7th
Georgia	7th
Florida:	
Atlantic and Gulf coasts	7th
Panhandle area	8th
Alabama	8th
Mississippi	8th
Region V:	
Minnesota:	
Great Lakes area	9th
Inland rivers area	8th
Wisconsin:	
Great Lakes area	9th
Inland rivers area	8th
Michigan	9th
Illinois:	
Great Lakes area	9th
Inland rivers area	8th
Indiana:	
Great Lakes area	9th
Inland rivers area	8th
Ohio:	
Great Lakes area	9th
Inland rivers area	8th
Region VI:	
New Mexico	8th
Texas	8th
Oklahoma	8th
Arkansas	8th
Louisiana	8th
Region VII:	
Nebraska	8th
Iowa	8th
Kansas	8th
Missouri	8th
Region VIII:	
Montana	13th

TABLE 2—STANDARD ADMINISTRATIVE REGIONS OF STATES AND CORRESPONDING COAST GUARD DISTRICTS AND EPA REGIONS—Continued

States and EPA region	Coast Guard district
Wyoming	8th
Utah	11th
Colorado	8th
North Dakota	8th
South Dakota	8th
Region IX:	
California	11th
Nevada	11th
Arizona	11th
Hawaii	14th
Guam	14th
American Samoa	14th
Trust Territory of the Pacific Islands	14th
Northern Mariana Islands	14th
Region X:	
Washington	13th
Oregon	13th
Idaho	13th
Alaska	17th

[CGD 84–067, 51 FR 17967, May 16, 1986, as amended by CGD 88–052, 53 FR 25121, July 1, 1988; CGD 97–023, 62 FR 33364, June 19, 1997; USCG–1998–3799, 63 FR 35530, June 30, 1998]

Subpart C—Removal of Discharged Oil

§ 153.301 Purpose.

The purpose of this subpart is to prescribe methods and procedures to be used to remove discharges of oil from coastal waters.

§ 153.303 Applicability.

The provisions of this subpart apply to any owner or operator of a vessel or onshore or offshore facility from which a discharge of oil into coastal waters occurs who acts to remove or arranges for the removal of such discharges.

§ 153.305 Methods and procedures for the removal of discharged oil.

Each person who removes or arranges for the removal of a discharge of oil from coastal waters shall:

(a) Use to the maximum extent possible mechanical methods and sorbents that:

(1) Most effectively expedite removal of the discharged oil; and

(2) Minimize secondary pollution from the removal operations;

NOTE: The Federal OSC is authorized by the provisions of the National Contingency Plan to require or deny the use of specific mechanical methods and sorbents. Sorbent selection considerations of the OSC include hydrographic and meteorological conditions, characteristics of the sorbent, and availability of a mechanical method for containment and recovery.

(b) Control the source of discharge, prevent further discharges, and halt or slow the spread of the discharge by mechanical methods or sorbents or both to the maximum extent possible;

(c) Recover the discharged oil from the water or adjoining shorelines by mechanical or manual methods or both to the maximum extent possible;

(d) Use chemical agents only in accordance with the provisions of Subpart H of the National Contingency Plan and with the prior approval of the Federal OSC; and

(e) Dispose of recovered oil and oil contaminated materials in accordance with applicable State and local government procedures.

[CGD 73–185, 41 FR 12630, Mar. 25, 1976, as amended by CGD 84–067, 51 FR 17966, May 16, 1986]

§ 153.307 Penalties.

Any person who fails or refuses to comply with the provisions of this part, or to comply with an order issued by the Federal On-Scene Coordinator under 33 U.S.C. §§ 1321(c) or (e)(1)(B), is liable for a civil penalty per day of violation or an amount equal to three times the costs incurred by the Oil Spill Liability Trust Fund as a result of such failure.

[USCG–1998–3799, 63 FR 35531, June 30, 1998]

Subpart D—Administration of the Pollution Fund

§ 153.401 Purpose.

This subpart prescribes policies, procedures, and reporting requirements for the payment from and deposit into the Fund established pursuant to section 311(k) of the Act.

§ 153.403 Applicability.

The provisions of this subpart apply to:

(a) Each Federal and State agency that desires reimbursement from the Fund for costs incurred during a removal activity; and

(b) The owner or operator of the vessel or onshore or offshore facility from which a discharge occurs that requires Federal removal activity.

§ 153.405 Liability to the pollution fund.

The owner or operator of the vessel or onshore or offshore facility from which a discharge occurs that requires Federal removal activity is liable to the pollution fund for the actual costs of Federal and State agencies, including the employment and use of personnel and equipment, not to exceed the limits established by sections 311(f) and (g) of the Act.

§ 153.407 Payments or reimbursements from the pollution fund.

(a) The following costs incurred during performance of a Phase III activity as defined in Subpart E of the National Contingency Plan, or a removal action as defined in Subpart F of the National Contingency Plan, are reimbursable to Federal and State agencies when authorized by the appropriate OSC under the authority of section 311(c) of the Act, and are reimbursable to Federal agencies when authorized by the appropriate Coast Guard or EPA official in the case of the summary removal or destruction of a vessel, other ''intervention'' (as defined in § 153.105(e) of this Part), or any other action under the authority of section 311(d) of the Act or the Intervention on the High Seas Act (33 U.S.C. 1471 et seq.):

(1) Costs found to be reasonable by the Coast Guard incurred by government industrial type facilities, including charges for overhead in accordance with the agency's industrial accounting system.

(2) Actual costs for which an agency is required or authorized by any law to obtain full reimbursement.

(3) Costs found to be reasonable by the Coast Guard incurred as a result of removal activity that are not ordinarily funded by an agency's regular appropriations and that are not incurred during normal operations. These costs include, but are not limited to, the following:

(i) Travel (transportation and per diem) specifically requested of the agency by the On-Scene Coordinator.

(ii) Overtime for civilian personnel specifically requested of the agency by the On-Scene Coordinator.

(iii) Incremental operating costs for vessels, aircraft, vehicles, and equipment incurred in connection with the removal activity.

(iv) Supplies, materials, and equipment procured for the specific removal activity and fully expended during the removal activity.

(v) Lease or rental of equipment for the specific removal activity.

(vi) Contract costs for the specific removal activity.

(4) Claims payable under Part 25, Subpart H of this title.

(b) The District Commander may authorize the direct payment of the costs found to be reasonable under paragraph (a)(3) of this section. Direct payment may only be made to Federal or State agencies, or to Federal contractors or suppliers. Direct payments to State or local agency contractors or suppliers will not be authorized.

(c) The Pollution Fund is not available to pay any foreign, Federal, State or local government or agency for the payment or reimbursement of its costs incurred in the removal of oil or hazardous substances discharged from a vessel or facility that it owns or operates.

NOTE: Federal procurement procedures governing contracts to purchase property and services apply to costs incurred as a result of removal activity. Where the public exigency will not permit the delay incident to advertising, purchases and contracts are negotiated pursuant to 10 U.S.C. 2304(a)(2) or 41 U.S.C. 252(c)(2), as applicable.

[CGD 73–185, 41 FR 12630, Mar. 25, 1976, as amended by CGD 84–067, 51 FR 17967, May 16, 1986]

§ 153.411 Procedures for payment of judgments.

An owner or operator of a vessel or an onshore or offshore facility who obtains a judgment against the United States under section 311(i) of the Act may have the judgment satisfied by requesting payment of the judgment in writing from the Commandant (G–L), 2100 Second Street SW., Washington, D.C. 20593. This request must be accompanied by a copy of the judgment and must designate to whom payment should be made.

§ 153.413 Deposit of money into the fund.

Any person liable for the payment of the following shall remit payment by check or postal money order, payable to the U.S. Coast Guard, to the cognizant District Commander, or to the Commandant for deposit into the Pollution Fund as prescribed in section 311(k) of the Act:

(a) A fine or penalty imposed, assessed, or compromised under section 311 of the Act, including the proceeds of a bond or other surety obtained pursuant to section 311(b)(6).

(b) A claim asserted by the cognizant District Commander for costs recoverable under sections 311 (f) and (g) of the Act.

(c) A judgment obtained by the United States for costs recoverable under sections 311 (f) and (g) of the Act.

§ 153.415 Cost summary reports.

As soon as practicable after completion of an action authorized under section 311 (c) or (d) of the Act or the Intervention on the High Seas Act, the OSC submits a cost summary report to the cognizant District Commander that includes:

(a) Names of agencies and contractors authorized to participate in the action;

(b) A general description of the function performed by each participating agency and contractor;

(c) An estimate of the cost of each function performed by each participating agency and contractor; and

(d) A copy of contracts, memoranda, or other documents pertaining to the functions performed by the participating agencies and contractors.

[CGD 73–185, 41 FR 12630, Mar. 25, 1976, as amended by CGD 84–067, 51 FR 17967, May 16, 1986]

§ 153.417 Reimbursement for actions under section 311(c) or 311(d) of the Act of the Intervention on the High Seas Act.

(a) Each Federal or State agency requesting reimbursement for an action authorized under section 311(c) or 311(d) of the Act or under the Intervention on the High Seas Act must, within 60 days after completion of the action, submit to the cognizant District Commander, through the OSC for review and certification required in paragraph (b) of this section, lists accompanied by supporting accounting data, itemizing actual costs incurred.

(b) Requests for reimbursement submitted by Federal and State agencies are reviewed by the OSC to ensure that the costs for which reimbursement is being sought were authorized as Phase III removal actions for oil discharges, or removal actions as defined in Subpart F for hazardous substance discharges, and must have one of the following certifications by the OSC, as appropriate:

(1) I certify that the actions for which reimbursement is being requested in the attached statements were authorized by me as [(Phase III oil removal actions) or (hazardous substance removal actions)], and reasonable costs related thereto are proper for payment from the Pollution Fund.

_____
(OSC signature)

_____
(Incident title)

_____
(Pollution incident project number)

(2) I certify that, except as noted below, the actions for which reimbursement is being requested in the attached statements were authorized by me as [(Phase III oil removal actions) or (hazardous substance removal actions)], and reasonable costs related thereto are proper for payment from the Pollution Fund. The following actions were not authorized by me and are not subject to reimbursement from the Pollution Fund:

_____
(OSC Signature)

_____
(Incident title)

_____
(Pollution incident project number)

[CGD 84–067, 51 FR 17967, May 16, 1986]

PART 154—FACILITIES TRANSFERRING OIL OR HAZARDOUS MATERIAL IN BULK

Subpart A—General

Sec.

154.100 Applicability.
154.105 Definitions.

154.106 Incorporation by reference.
154.107 Alternatives.
154.108 Exemptions.
154.110 Letter of intent.
154.120 Facility examinations.

Subpart B—Operations Manual

154.300 Operations manual: General.
154.310 Operations manual: Contents.
154.320 Operations manual: Amendment.
154.325 Operations manual: Procedures for examination.

Subpart C—Equipment Requirements

154.500 Hose assemblies.
154.510 Loading arms.
154.520 Closure devices.
154.525 Monitoring devices.
154.530 Small discharge containment.
154.540 Discharge removal.
154.545 Discharge containment equipment.
154.550 Emergency shutdown.
154.560 Communications.
154.570 Lighting.

Subpart D—Facility Operations

154.700 General.
154.710 Persons in charge: Designation and qualification.
154.730 Persons in charge: Evidence of designation.
154.735 Safety requirements.
154.740 Records.
154.750 Compliance with operations manual.

Subpart E—Vapor Control Systems

154.800 Applicability.
154.802 Definitions.
154.804 Review, certification, and initial inspection.
154.806 Application for acceptance as a certifying entity.
154.808 Vapor control system, general.
154.810 Vapor line connections.
154.812 Facility requirements for vessel liquid overfill protection.
154.814 Facility requirements for vessel vapor overpressure and vacuum protection.
154.820 Fire, explosion, and detonation protection.
154.822 Detonation arresters, flame arresters, and flame screens.
154.824 Inerting, enriching, and diluting systems.
154.826 Vapor compressors and blowers.
154.828 Vapor recovery and vapor destruction units.
154.840 Personnel training.
154.850 Operational requirements.

Subpart F—Response Plans for Oil Facilities

154.1010 Purpose.
154.1015 Applicability.
154.1016 Facility classification by COTP.
154.1017 Response plan submission requirements.
154.1020 Definitions.
154.1025 Operating restrictions and interim operating authorization.
154.1026 Qualified individual and alternate qualified individual.
154.1028 Methods of ensuring the availability of response resources by contract or other approved means.
154.1029 Worst case discharge.
154.1030 General response plan contents.
154.1035 Specific requirements for facilities that could reasonably be expected to cause significant and substantial harm to the environment.
154.1040 Specific requirements for facilities that could reasonably be expected to cause substantial harm to the environment.
154.1041 Specific response information to be maintained on mobile MTR facilities.
154.1045 Response plan development and evaluation criteria for facilities that handle, store, or transport Group I through Group IV petroleum oils.
154.1047 Response plan development and evaluation criteria for facilities that handle, store, or transport Group V petroleum oils.
154.1050 Training.
154.1055 Exercises.
154.1057 Inspection and maintenance of response resources.
154.1060 Submission and approval procedures.
154.1065 Plan review and revision procedures.
154.1070 Deficiencies.
154.1075 Appeal process.

Subpart G—Additional Response Plan Requirements for a Trans–Alaska Pipeline Authorization Act (TAPAA) Facility Operating in Prince William Sound, Alaska

154.1110 Purpose and applicability.
154.1115 Definitions.
154.1120 Operating restrictions and interim operating authorization.
154.1125 Additional response plan requirements.
154.1130 Requirements for prepositioned response equipment.
154.1135 Response plan development and evaluation criteria.
154.1140 TAPAA facility contracting with a vessel.

Subpart H—Response Plans for Animal Fats and Vegetable Oils Facilities

154.1210 Purpose and applicability.
154.1220 Response plan submission requirements.

154.1225 Response plan development and evaluation criteria for facilities that handle, store, or transport animal fats and vegetable oils.
154.1228 Methods of ensuring the availability of response resources by contract or other approved means.

Subpart I—Response Plans for Other Non-Petroleum Oil Facilities

154.1310 Purpose and applicability.
154.1320 Response plan submission requirements.
154.1325 Response plan development and evaluation criteria for facilities that handle, store, or transport other non-petroleum oils.
APPENDIX A TO PART 154—GUIDELINES FOR DETONATION FLAME ARRESTERS
APPENDIX B TO PART 154—STANDARD SPECIFICATION FOR TANK VENT FLAME ARRESTERS
APPENDIX C TO PART 154—GUIDELINES FOR DETERMINING AND EVALUATING REQUIRED RESPONSE RESOURCES FOR FACILITY RESPONSE PLANS
APPENDIX D TO PART 154—TRAINING ELEMENTS FOR OIL SPILL RESPONSE PLANS

AUTHORITY: 33 U.S.C. 1231, 1321(j)(1)(C), (j)(5), (j)(6) and (m)(2); sec. 2, E.O. 12777, 56 FR 54757; 49 CFR 1.46. Subpart F is also issued under 33 U.S.C. 2735.

Subpart A—General

§ 154.100 Applicability.

(a) This part applies to each facility that is capable of transferring oil or hazardous materials, in bulk, to or from a vessel, where the vessel has a total capacity, from a combination of all bulk products carried, of 39.75 cubic meters (250 barrels) or more. This part does not apply to the facility when it is in a caretaker status. This part does not apply to any offshore facility operating under the jurisdiction of the Secretary of the Department of Interior.

(b) Upon written notice to the facility operator, the COTP may apply, as necessary for the safety of the facility, its personnel, or the public, all or portions of § 154.735 to each facility that is capable of transferring oil or hazardous material, in bulk, only to or from a vessel with a capacity of less than 250 barrels. If the facility is in caretaker status, the COTP may not apply the provisions of § 154.735 to the facility if its storage tanks and piping are gas free.

(c) Upon a determination by the COTP under § 154.1016 that an MTR facility, as defined in subpart F, could reasonably be expected to cause substantial harm to the environment by discharging oil into or on the navigable waters, adjoining shorelines, or exclusive economic zone, subpart F of this part is applicable to the facility.

(d) The following sections of this part apply to mobile facilities:

(1) Section 154.105 Definitions.

(2) Section 154.107 Alternatives.

(3) Section 154.108 Exemptions.

(4) Section 154.110 Letter of Intent.

(5) Section 154.120 Facility examinations.

(6) Section 154.300 Operations Manual: General.

(7) Section 154.310 Operations Manual: Contents. Paragraphs (a)(2), (a)(3), (a)(5) through (a)(7), (a)(9), (a)(12), (a)(14), (a)(16), (a)(17)(ii) through (a)(17)(iv), (a)(18), (a)(20) through (23), (c) and (d).

(8) Section 154.320 Operations Manual: Amendment.

(9) Section 154.325 Operations Manual: Procedures for examination.

(10) Section 154.500 Hose assemblies. Paragraphs (a), (b), (c), (d)(1) through (3) and (e)(1) through (3).

(11) Section 154.520 Closure devices.

(12) Section 154.530 Small discharge containment. Paragraphs (a)(1) through (3) and (d).

(13) Section 154.545 Discharge containment equipment.

(14) Section 154.550 Emergency shutdown.

(15) Section 154.560 Communications.

(16) Section 154.570 Lighting. Paragraphs (c) and (d).

(17) Section 154.700 General.

(18) Section 154.710 Persons in charge: Designation and qualification. Paragraphs (a) through (c), (d)(1) through (3), (d)(7) and (e).

(19) Section 154.730 Persons in charge: Evidence of designation.

(20) Section 154.735 Safety requirements. Paragraphs (d), (f), (g), (j)(1) through (2), (k)(1) through (2), (m), (o) through (q), (r)(1) through (3), (s) and (v).

(21) Section 154.740 Records. Paragraphs (a) through (f) and (j).

(22) Section 154.750 Compliance with Operations Manual.

[CGD 86–034, 55 FR 36252, Sept. 4, 1990, as amended by CGD 91–036, 58 FR 7352, Feb. 5, 1993; CGD 93–056, 61 FR 41457, Aug. 8, 1996]

§ 154.105 Definitions.

As used in this part:

Barrel means a quantity of liquid equal to 42 U.S. gallons.

Boundary Line means any of the lines described in 46 CFR part 7.

Captain of the Port (COTP) means the U.S. Coast Guard officer commanding a Captain of the Port Zone described in Part 3 of this chapter, or that person's authorized representative.

Caretaker Status denotes a facility where all piping, hoses, loading arms, storage tanks, and related equipment in the marine transfer area are completely free of oil or hazardous materials, where these components have been certified as being gas free, where piping, hoses, and loading arms terminating near any body of water have been blanked, and where the facility operator has notified the COTP that the facility will be in caretaker status.

Commandant means the Commandant of the Coast Guard or an authorized representative.

Contiguous Zone means the entire zone established by the United States under Article 24 of the Convention on the Territorial Sea and the Contiguous Zone, but not extending beyond 12 miles from the baseline from which the breadth of the territorial sea is measured.

District Commander means the officer of the Coast Guard designated by the Commandant to command a Coast Guard District, as described in Part 3 of this chapter or an authorized representative.

Facility means either an onshore or offshore facility, except for an offshore facility operating under the jurisdiction of the Secretary of the Department of Interior, and includes, but is not limited to, structure, equipment, and appurtenances thereto, used or capable of being used to transfer oil or hazardous materials to or from a vessel or public vessel. Also included are facilities that tank clean or strip and any floating structure that is used to support an integral part of the facility's operation. A facility includes federal, state, municipal, and private facilities.

Facility operator means the person who owns, operates, or is responsible for the operation of the facility.

Hazardous material means a liquid material or substance, other than oil or liquefied gases, listed under 46 CFR 153.40 (a), (b), (c), or (e).

Marine transfer area means that part of a waterfront facility handling oil or hazardous materials in bulk between the vessel, or where the vessel moors, and the first manifold or shutoff valve on the pipeline encountered after the pipeline enters the secondary containment required under 40 CFR 112.7 or 49 CFR 195.264 inland of the terminal manifold or loading arm, or, in the absence of secondary containment, to the valve or manifold adjacent to the bulk storage tank, including the entire pier or wharf to which a vessel transferring oil or hazardous materials is moored.

MARPOL 73/78 means the International Convention for the Prevention of Pollution from Ships, 1973 (done at London, November 2, 1973) as modified by the Protocol of 1978 relating to the International Convention for the Prevention of Pollution from Ships, 1973 (done at London, February 17, 1978).

Mobile facility means any facility that can readily change location, such as a tank truck or tank car, other than a vessel or public vessel.

Monitoring device means any fixed or portable sensing device used to monitor for a discharge of oil or hazardous material onto the water, within or around a facility, and designed to notify operating personnel of a discharge of oil or hazardous material.

Officer in Charge, Marine Inspection (OCMI) means the U.S. Coast Guard officer commanding a Marine Inspection Zone described in Part 3 of this chapter, or an authorized representative.

Offshore facility means any facility of any kind located in, on, or under, any of the navigable waters of the United States, and any facility of any kind which is subject to the jurisdiction of the United States and is located in, on, or under any other waters, other than a vessel or a public vessel.

Oil means oil of any kind or in any form, including but not limited to, petroleum, fuel oil, sludge, oil refuse, and oil mixed with wastes other than dredged spoil.

Onshore facility means any facility (including, but not limited to, motor vehicles and rolling stock) of any kind located in, on, or under any land within the United States other than submerged land.

Person in charge means an individual designated as a person in charge of transfer operations under § 154.710 (for facilities) or § 155.700 (for vessels) of this chapter.

STCW means the International Convention on Standards of Training, Certification, and Watchkeeping for Seafarers, 1978.

Self-propelled tank vessel means a self-propelled tank vessel other than a tankship.

Tank barge means a non-self-propelled tank vessel.

Tankship means a self-propelled tank vessel constructed or adapted primarily to carry oil or hazardous material in bulk in the cargo spaces.

Tank vessel means a vessel that is constructed or adapted to carry, or that carries, oil or hazardous material in bulk as cargo or cargo residue, and that—

(a) Is a vessel of the United States;

(b) Operates on the navigable waters of the United States; or

(c) Transfers oil or hazardous material in a port or place subject to the jurisdiction of the United States.

Transfer means any movement of oil or hazardous material to, from, or within a vessel by means of pumping, gravitation, or displacement. A transfer is considered to begin when the person in charge on the transferring vessel or facility and the person in charge on the receiving facility or vessel first meet to begin completing the declaration of inspection as required by § 156.150 of this chapter. A transfer is considered to be complete when all the connections for the transfer have been uncoupled and secured with blanks or other closure devices and both of the persons in charge have completed the declaration of inspection to include the date and time the transfer was complete.

Vessel operator means a person who owns, operates, or is responsible for the operation of a vessel.

[CGD 75–124, 45 FR 7169, Jan. 31, 1980, as amended by CGD 86–034, 55 FR 36252, Sept. 4, 1990; CGD 79–116, 60 FR 17141, Apr. 4, 1995; CGD 93–056, 61 FR 41458, Aug. 8, 1996; 62 FR 3610, Jan. 24, 1997; CGD 79–116, 62 FR 25125, May 8, 1997]

§ 154.106 Incorporation by reference.

(a) Certain material is incorporated by reference into this part with the approval of the Director of the Federal Register in accordance with 5 U.S.C. 552(a) and 1 CFR part 51. To enforce any edition other than that specified in paragraph (b) of this section, the Coast Guard must publish notice of change in the FEDERAL REGISTER and make the material available to the public. All approved material is on file at the Office of the Federal Register, 800 North Capitol Street NW., suite 700, Washington, DC and at the U.S. Coast Guard, Office of the Compliance (G–MOC), Room 1116, 2100 Second Street SW., Washington, DC 20593–0001, and is available from the sources indicated in paragraph (b) of this section.

(b) The material approved for incorporation by reference in this part and the sections affected are:

American Petroleum Institute (API)

2101 L Street NW., Washington, DC 20037

API Standard 2000, Venting Atmospheric and Low-Pressure Storage Tanks (Nonrefrigerated and Refrigerated), Third Edition, January 1982 (reaffirmed December 1987) 154.814

API Recommended Practice 550, Manual on Installation of Refinery Instruments and Control Systems, Part II—Process Stream Analyzers, Section 1—Oxygen Analyzers, Fourth Edition, February 1985.....154.824

American National Standards Institute (ANSI)

11 West 42nd Street, New York, NY 10036

ANSI B16.5, Steel Pipe Flanges and Flanged Fittings, 1988.....154.500; 154.808; 154.810

ANSI B16.24, Bronze Pipe Flanges and Flange Fittings Class 150 and 300, 1979.....154.500; 154.808

ANSI B31.3, Chemical Plant and Petroleum Refinery Piping, 1987 (including B31.3a–1988, B31.3b–1988, and B31.3c–1989 addenda).....154.510; 154.808

American Society for Testing and Materials (ASTM) 1916 Race Street, Philadelphia, PA 19103.

ASTM F 631–80 (Reapproved 1985), Standard Method for Testing Full Scale Advancing Spill Removal Devices. Appendix C.

ASTM F 715–81 (Reapproved 1986), Standard Methods of Testing Spill Control Barrier Membrane Materials. Appendix C.

ASTM F 808–83 (1988), Standard Guide for Collecting Skimmer Performance Data in Uncontrolled Environments. Appendix C.

ASTM F 989–86, Standard Test Methods for Spill Control Barrier Tension Members. Appendix C.

ASTM F–1122 (1987), Standard Specifications for Quick Disconnect Couplings. 154.500

International Electrotechnical Commission (IEC)

Bureau Central de la Commission Electrotechnique Internationale, 1 rue de Varembe, Geneva, Switzerland

IEC 309–1—Plugs, Socket-Outlets and Couplers for Industrial Purposes: Part 1, General Requirements, 1979 .....154.812

IEC 309–2—Plugs, Socket-Outlets and Couplers for Industrial Purposes; Part 2, Dimensional Interchangeability Requirements for Pin and Contact-tube Accessories, 1981 .....154.812

National Electrical Manufacturers Association (NEMA)

2101 L Street NW., Washington, DC 20036

ANSI NEMA WD–6—Wiring Devices, Dimensional Requirements, 1988 ....154.812

National Fire Protection Association (NFPA)

1 Batterymarch Park, Quincy, MA 02269–9101

NFPA 51B, Standard for Fire Prevention in Use of Cutting and Welding Processes, 1994 .....154.735

Oil Companies International Marine Forum (OCIMF)

96 Victoria Street, 15th Floor, London SW1E 5JW, England

International Safety Guide for Oil Tankers and Terminals, Section 6.10, Fourth Ed., 1996.....154.810

International Safety Guide for Oil Tankers and Terminals, Sections 9.1, 9.2, 9.3 and 9.5, Fourth Ed., 1996 .....154.735

[CGD 88–032, 56 FR 35819, July 29, 1991, as amended by CGD 91–036, 58 FR 7352, Feb. 5, 1993; CGD 96–026, 61 FR 33665, June 28, 1996; CGD 93–056, 61 FR 41458, Aug. 8, 1996; 61 FR 42462, Aug. 15, 1996]

§ 154.107 Alternatives.

(a) The COTP may consider and approve alternative procedures, methods, or equipment standards to be used by a facility operator in lieu of any requirement in this part if:

(1) Compliance with the requirement is economically or physically impractical;

(2) The alternative provides an equivalent level of safety and protection from pollution by oil or hazardous material, which is documented in the request; and

(3) The facility operator submits a written request for the alternative.

(b) The COTP takes final approval or disapproval action on the request, submitted in accordance with paragraph (a) of this section, in writing within 30 days of receipt of the request.

[CGD 75–124, 45 FR 7169, Jan. 31, 1980, as amended by CGD 86–034, 55 FR 36252, Sept. 4, 1990; CGD 93–056, 61 FR 41458, Aug. 8, 1996]

§ 154.108 Exemptions.

(a) The Assistant Commandant for Marine Safety and Environmental Protection, acting for the Commandant, grants an exemption or partial exemption from compliance with any requirement in this part if:

(1) A facility operator submits an application for the exemption via the COTP; and

(2) It is determined, from the application, that:

(i) Compliance with the requirement is economically or physically impractical;

(ii) No alternative procedures, methods, or equipment standards exist that would provide an equivalent level of safety and protection from pollution by oil or hazardous material; and

(iii) The likelihood of oil or hazardous material being discharged is not substantially increased as a result of the exemption.

(b) If requested, the applicant must submit any appropriate information, including an environmental and economic assessment of the effects of and reasons for the exemption, and proposed procedures, methods or equipment standards.

(c) The exemption may specify the procedures, methods, or equipment standards that will apply.

(d) An exemption is granted or denied in writing. The decision of the Assistant Commandant for Marine Safety and Environmental Protection is a final agency action.

[CGD 75–124, 45 FR 7169, Jan. 31, 1980, as amended by CGD 88–052, 53 FR 25122, July 1, 1988; CGD 86–034, 55 FR 36252, Sept. 4, 1990; 55 FR 49997, Dec. 4, 1990; CGD 96–026, 61 FR 33666, June 28, 1996; CGD 93–056, 61 FR 41458, Aug. 8, 1996; CGD 97–023, 62 FR 33364, June 19, 1997]

§ 154.110 Letter of intent.

(a) The facility operator of any facility to which this part applies must submit a letter of intent to operate a facility or to conduct mobile facility operations to the COTP not less than 60 days before the intended operations unless a shorter period is allowed by the COTP. Previously submitted letters of intent need not be resubmitted.

(b) The letter of intent required by paragraph (a) of this section may be in any form but must contain:

(1) The names, addresses, and telephone numbers of the facility operator and the facility owner;

(2) The name, address, and telephone number of the facility or, in the case of a mobile facility, the dispatching office; and

(3) Except for a mobile facility, the geographical location of the facility in relation to the associated body of navigable waters.

(c) The facility operator of any facility for which a letter of intent has been submitted, shall within five (5) days advise the COTP in writing of any changes of information and shall cancel, in writing, the letter for any facility at which transfer operations are no longer conducted.

[CGD 75–124, 45 FR 7169, Jan. 31, 1980, as amended by CGD 86–034, 55 FR 36252, Sept. 4, 1990; CGD 93–056, 61 FR 41458, Aug. 8, 1996]

§ 154.120 Facility examinations.

(a) The facility operator shall allow the Coast Guard, at any time, to make any examination and shall perform, upon request, any test to determine compliance with this part and part 156, as applicable. The facility operator shall conduct all required testing of facility equipment in a manner acceptable to the Coast Guard.

(b) The COTP shall provide the facility operator with a written report of the results of the examination for the record required by § 154.740(e) and shall list the deficiencies in the report when the facility is not in compliance with the requirements in this part and Part 156 of this chapter.

[CGD 75–124, 45 FR 7169, Jan. 31, 1980]

Subpart B—Operations Manual

§ 154.300 Operations manual: General.

(a) The facility operator of each facility to which this part applies shall submit, with the letter of intent, two copies of an Operations Manual that:

(1) Describes how the applicant meets the operating rules and equipment requirements prescribed by this part and Part 156 of this chapter;

(2) Describes the responsibilities of personnel under this part and Part 156 of this chapter in conducting transfer operations; and

(3) Includes translations into a language or languages understood by all designated persons in charge of transfer operations employed by the facility.

(b) The facility operator shall maintain the operations manual so that it is:

(1) Current; and

(2) Readily available for examination by the COTP.

(c) The COTP shall examine the Operations Manual when submitted, after any substantial amendment, and as otherwise required by the COTP.

(d) In determining whether the manual meets the requirements of this part and Part 156 of this chapter the COTP shall consider the size, complexity, and capability of the facility.

(e) If the manual meets the requirements of this part and part 156 of this chapter, the COTP will return one copy

of the manual marked ''Examined by the Coast Guard'' as described in § 154.325.

(f) The facility operator shall ensure that a sufficient number of copies of the examined Operations Manual, including a sufficient number of the translations required by paragraph (a)(3) of this section, are readily available for each facility person in charge while conducting a transfer operation.

NOTE: The facility operator may request that the contents of the operations manual or portions thereof be considered commercial or financial information that is privileged or confidential. Under the Freedom of Information Act, the Coast Guard would withhold any part of the contents of the operations manual from public disclosure upon determining that it is commercial or financial information that is privileged or confidential.

[CGD 75–124, 45 FR 7169, Jan. 31, 1980, as amended by CGD 86–034, 55 FR 36253, Sept. 4, 1990; CGD 93–056, 61 FR 41458, Aug. 8, 1996]

§ 154.310 Operations manual: Contents.

(a) Each operations manual required by § 154.300 must contain:

(1) The geographic location of the facility;

(2) A physical description of the facility including a plan and/or plans, maps, drawings, aerial photographs or diagrams, showing the boundaries of the facility subject to Coast Guard jurisdiction, mooring areas, transfer locations, control stations, wharfs, the extent and scope of the piping subject to the tests required by § 156.170(c)(4) of this chapter, and the locations of safety equipment. For mobile facilities, a physical description of the facility;

(3) The hours of operation of the facility;

(4) The sizes, types, and number of vessels that the facility can transfer oil or hazardous material to or from simultaneously;

(5) For each product transferred at the facility:

(i) Generic or chemical name; and

(ii) The following cargo information:

(*a*) The name of the cargo as listed under appendix II of annex II of MARPOL 73/78, Table 30.25–1 of 46 CFR 30.25–1, Table 151.05 of 46 CFR 151.05–1, or Table 1 of 46 CFR part 153.

(*b*) A description of the appearance of the cargo;

(*c*) A description of the odor of the cargo;

(*d*) The hazards involved in handling the cargo;

(*e*) Instructions for safe handling of the cargo;

(*f*) The procedures to be followed if the cargo spills or leaks, or if a person is exposed to the cargo; and

(*g*) A list of fire fighting procedures and extinguishing agents effective with fires involving the cargo.

(6) The minimum number of persons on duty during transfer operations and their duties;

(7) The name and telephone number of the qualified individual identified under § 154.1026 of this part and the title and/or position and telephone number of the Coast Guard, State, local, and other personnel who may be called by the employees of the facility in an emergency;

(8) The duties of watchmen, required by § 155.810 of this chapter and 46 CFR 35.05–15, for unmanned vessels moored at the facility;

(9) A description of each communication system required by this part;

(10) The location and facilities of each personnel shelter, if any;

(11) A description and instructions for the use of drip and discharge collection and vessel slop reception facilities, if any;

(12) A description and the location of each emergency shutdown system;

(13) Quantity, types, locations, and instructions for use of monitoring devices if required by § 154.525;

(14) Quantity, type, location, instructions for use, and time limits for gaining access to the containment equipment required by § 154.545;

(15) Quantity, type, location, and instructions for use of fire extinguishing equipment required by § 154.735(d) of this part;

(16) The maximum allowable working pressure (MAWP) of each loading arm, transfer pipe system, and hose assembly required to be tested by § 156.170 of this chapter, including the maximum relief valve setting (or maximum system pressure when relief valves are not provided) for each transfer system;

(17) Procedures for:

(i) Operating each loading arm including the limitations of each loading arm;

(ii) Transferring oil or hazardous material;

(iii) Completion of pumping; and

(iv) Emergencies;

(18) Procedures for reporting and initial containment of oil or hazardous material discharges;

(19) A brief summary of applicable Federal, state, and local oil or hazardous material pollution laws and regulations;

(20) Procedures for shielding portable lighting authorized by the COTP under § 154.570(c); and

(21) A description of the training and qualification program for persons in charge.

(22) Statements explaining that each hazardous materials transfer hose is marked with either the name of each product which may be transferred through the hose or with letters, numbers, symbols, color codes or other system acceptable to the COTP representing all such products and the location in the Operations Manual where a chart or list of symbols utilized is located and a list of the compatible products which may be transferred through the hose can be found for consultation before each transfer; and

(23) For facilities that conduct tank cleaning or stripping operations, a description of their procedures.

(b) lf a facility collects vapors emitted from vessel cargo tanks for recovery, destruction, or dispersion, the operations manual must contain a description of the vapor collection system at the facility which includes:

(1) A line diagram or simplified piping and instrumentation diagram (P&ID) of the facility's vapor control system piping, including the location of each valve, control device, pressure-vacuum relief valve, pressure indicator, flame arrester, and detonation arrester; and

(2) A description of the vapor control system's design and operation including the:

(i) Vapor line connection;

(ii) Startup and shutdown procedures;

(iii) Steady state operating procedures;

(iv) Provisions for dealing with pyrophoric sulfide (for facilities which handle inerted vapors of cargoes containing sulfur);

(v) Alarms and shutdown devices; and

(vi) Pre-transfer equipment inspection requirements.

(c) The facility operator shall incorporate a copy of each amendment to the operations manual under § 154.320 in each copy of the manual with the related existing requirement, or add the amendment at the end of each manual if not related to an existing requirement.

(d) The operations manual must be written in the order specified in paragraph (a) of this section, or contain a cross-referenced index page in that order.

(Approved by the Office of Management and Budget under control number 2115–0078)

[CGD 75–124, 45 FR 7171, Jan. 31, 1980, as amended by CGD 88–102, 55 FR 25428, June 21, 1990; CGD 86–034, 55 FR 36253, Sept. 4, 1990; CGD 92–027, 58 FR 39662, July 26, 1993; CGD 93–056, 61 FR 41459, Aug. 8, 1996]

§ 154.320 Operations manual: Amendment.

(a) Using the following procedures, the COTP may require the facility operator to amend the operations manual if the COTP finds that the operations manual does not meet the requirements in this part:

(1) The COTP will notify the facility operator in writing of any inadequacies in the Operations Manual. The facility operator may submit written information, views, and arguments regarding the inadequacies identified, and proposals for amending the Manual, within 45 days from the date of the COTP notice. After considering all relevant material presented, the COTP shall notify the facility operator of any amendment required or adopted, or the COTP shall rescind the notice. The amendment becomes effective 60 days after the facility operator receives the notice, unless the facility operator petitions the Commandant to review the COTP's notice, in which case its effective date is delayed pending a decision by the Commandant. Petitions to the Commandant must be submitted in writing via the COTP who issued the

requirement to amend the Operations Manual.

(2) If the COTP finds that there is a condition requiring immediate action to prevent the discharge or risk of discharge of oil or hazardous material that makes the procedure in paragraph (a)(1) of this section impractical or contrary to the public interest, the COTP may issue an amendment effective on the date the facility operator receives notice of it. In such a case, the COTP shall include a brief statement of the reasons for the findings in the notice. The owner or operator may petition the Commandant to review the amendment, but the petition does not delay the amendment.

(b) The facility operator may propose amendments to the operations manual by:

(1) Submitting any proposed amendment and reasons for the amendment to the COTP not less than 30 days before the requested effective date of the proposed amendment; or

(2) If an immediate amendment is needed, requesting the COTP to approve the amendment immediately.

(c) The COTP shall respond to proposed amendments submitted under paragraph (b) of this section by:

(1) Approving or disapproving the proposed amendments;

(2) Advising the facility operator whether the request is approved, in writing, before the requested date of the amendments;

(3) Including any reasons in the written response if the request is disapproved; and

(4) If the request is made under paragraph (b)(2) of this section immediately approving or rejecting the request.

(d) Amendments to personnel and telephone number lists required by § 154.310(a)(7) of this part do not require examination by the COTP, but the COTP must be advised of such amendments as they occur.

[CGD 75–124, 45 FR 7171, Jan. 31, 1980, as amended by CGD 86–034, 55 FR 36253, Sept. 4, 1990; CGD 93–056, 61 FR 41459, Aug. 8, 1996]

§ 154.325 Operations manual: Procedures for examination.

(a) The operator of a facility shall submit two copies of the Operations Manual to the Captain of the Port of the zone in which the facility is located.

(b) Not less than 60 days prior to any transfer operation, the operator of a new facility shall submit, with the letter of intent, two copies of the Operations Manual to the Captain of the Port of the zone in which the facility is located.

(c) After a facility is removed from caretaker status, not less than 30 days prior to any transfer operation the operator of that facility shall submit two copies of the Operations Manual to the COTP of the zone in which the facility is located unless the manual has been previously examined and no changes have been made since the examination.

(d) If the COTP finds that the Operations Manual meets the requirements of this part and part 156 of this chapter, the COTP will return one copy of the manual to the operator marked ''Examined by the Coast Guard''.

(e) If the COTP finds that the Operations Manual does not meet the requirements of this part and/or part 156 of this chapter, the COTP will return the manuals with an explanation of why it does not meet the requirements of this chapter.

(f) No person may use any Operations Manual for transfer operations as required by this chapter unless the Operations Manual has been examined by the COTP.

(g) The Operations Manual is voided if the facility operator—

(1) Amends the Operations Manual without following the procedures in § 154.320 of this part;

(2) Fails to amend the Operations Manual when required by the COTP; or

(3) Notifies the COTP in writing that the facility will be placed in caretaker status.

[CGD 93–056, 61 FR 41459, Aug. 8, 1996]

Subpart C—Equipment Requirements

§ 154.500 Hose assemblies.

Each hose assembly used for transferring oil or hazardous material must meet the following requirements:

(a) The minimum design burst pressure for each hose assembly must be at

least four times the sum of the pressure of the relief valve setting (or four times the maximum pump pressure when no relief valve is installed) plus the static head pressure of the transfer system, at the point where the hose is installed.

(b) The maximum allowable working pressure (MAWP) for each hose assembly must be more than the sum of the pressure of the relief valve setting (or the maximum pump pressure when no relief valve is installed) plus the static head pressure of the transfer system, at the point where the hose is installed.

(c) Each nonmetallic hose must be usable for oil or hazardous material service.

(d) Each hose assembly must either have:

(1) Full threaded connections;

(2) Flanges that meet standard B16.5, *Steel Pipe Flanges and Flang Fittings,* or standard B.16.24, *Brass or Bronze Pipe Flanges,* of the American National Standards Institute (ANSI); or

(3) Quick-disconnect couplings that meet ASTM F–1122.

(e) Each hose must be marked with one of the following:

(1) The name of each product for which the hose may be used; or

(2) For oil products, the words ''OIL SERVICE''; or

(3) For hazardous materials, the words ''HAZMAT SERVICE—SEE LIST'' followed immediately by a letter, number or other symbol that corresponds to a list or chart contained in the facility's operations manual or the vessel's transfer procedure documents which identifies the products that may be transferred through a hose bearing that symbol.

(f) Each hose also must be marked with the following, except that the information required by paragraphs (f)(2) and (3) of this section need not be marked on the hose if it is recorded in the hose records of the vessel or facility, and the hose is marked to identify it with that information:

(1) Maximum allowable working pressure;

(2) Date of manufacture; and

(3) Date of the latest test required by § 156.170.

(g) The hose burst pressure and the pressure used for the test required by § 156.170 of this chapter must not be marked on the hose and must be recorded elsewhere at the facility as described in paragraph (f) of this section.

(h) Each hose used to transfer fuel to a vessel that has a fill pipe for which containment can not practically be provided must be equipped with an automatic back pressure shutoff nozzle.

[CGD 75–124, 45 FR 7172, Jan. 31, 1980, as amended by CGD 86–034, 55 FR 36253, Sept. 4, 1990; CGD 88–032, 56 FR 35820, July 29, 1991; CGD 92–027, 58 FR 39662, July 26, 1993; CGD 93–056, 61 FR 41459, Aug. 8, 1996]

§ 154.510 Loading arms.

(a) Each mechanical loading arm used for transferring oil or hazardous material and placed into service after June 30, 1973, must meet the design, fabrication, material, inspection, and testing requirements in ANSI B31.3.

(b) The manufacturer's certification that the standard in paragraph (a) of this section has been met must be permanently marked on the loading arm or recorded elsewhere at the facility with the loading arm marked to identify it with that information.

(c) Each mechanical loading arm used for transferring oil or hazardous material must have a means of being drained or closed before being disconnected after transfer operations are completed.

[CGD 75–124, 45 FR 7172, Jan. 31, 1980, as amended by CGD 86–034, 55 FR 36253, Sept. 4, 1990]

§ 154.520 Closure devices.

(a) Except as provided in paragraph (b) of this section, each facility to which this part applies must have enough butterfly valves, wafer-type resilient seated valves, blank flanges, or other means acceptable to the COTP to blank off the ends of each hose or loading arm that is not connected for the transfer of oil or hazardous material. Such hoses and/or loading arms must be blanked off during the transfer of oil or hazardous material. A suitable material in the joints and couplings shall be installed on each end of the hose assembly or loading arm not being used for transfer to ensure a leak-free seal.

(b) A new, unused hose, and a hose that has been cleaned and is gas free, is exempt from the requirements of paragraph (a) of this section.

[CGD 93–056, 61 FR 41459, Aug. 8, 1996]

§ 154.525 Monitoring devices.

The COTP may require the facility to install monitoring devices if the installation of monitoring devices at the facility would significantly limit the size of a discharge of oil or hazardous material and either:

(a) The environmental sensitivity of the area requires added protection;

(b) The products transferred at the facility pose a significant threat to the environment; or

(c) The size or complexity of the transfer operation poses a significant potential for a discharge of oil or hazardous material.

[CGD 75–124, 45 FR 7172, Jan. 31, 1980, as amended by CGD 86–034, 55 FR 36253, Sept. 4, 1990]

§ 154.530 Small discharge containment.

(a) Except as provided in paragraphs (c), (d), and (e) of this section, each facility to which this part applies must have fixed catchments, curbing, or other fixed means to contain oil or hazardous material discharged in at least—

(1) Each hose handling and loading arm area (that area on the facility that is within the area traversed by the free end of the hose or loading arm when moved from its normal stowed or idle position into a position for connection);

(2) Each hose connection manifold area; and

(3) Under each hose connection that will be coupled or uncoupled as part of the transfer operation during coupling, uncoupling, and transfer.

(b) The discharge containment means required by paragraph (a) of this section must have a capacity of at least:

(1) Two barrels if it serves one or more hoses of 6-inch inside diameter or smaller, or loading arms of 6-inch nominal pipe size diameter or smaller;

(2) Three barrels if it serves one or more hoses with an inside diameter of more than 6-inches, but less than 12 inches, or loading arms with a nominal pipe size diameter of more than 6 inches, but less than 12 inches; or

(3) Four barrels if it serves one or more hoses of 12-inch inside diameter or larger, or loading arms of 12-inch nominal pipe size diameter or larger.

(c) The facility may use portable means of not less than ½ barrel capacity each to meet the requirements of paragraph (a) of this section for part or all of the facility if the COTP finds that fixed means to contain oil or hazardous material discharges are not feasible.

(d) A mobile facility may have portable means of not less than five gallons capacity to meet the requirements of paragraph (a) of this section.

(e) Fixed or portable containment may be used to meet the requirements of paragraph (a)(3) of this section.

[CGD 75–124, 45 FR 7172, Jan. 31, 1980, as amended by CGD 86–034, 55 FR 36253, Sept. 4, 1990; CGD 93–056, 61 FR 41460, Aug. 8, 1996]

§ 154.540 Discharge removal.

Each facility to which this part applies must have a means to safely remove discharged oil or hazardous material, within one hour of completion of the transfer, from the containment required by § 154.530 of this part without discharging the oil or hazardous material into the water.

[CGD 93–056, 61 FR 41460, Aug. 8, 1996]

§ 154.545 Discharge containment equipment.

(a) Each facility must have ready access to enough containment material and equipment to contain any oil or hazardous material discharged on the water from operations at that facility.

(b) For the purpose of this section, ''access'' may be by direct ownership, joint ownership, cooperative venture, or contractual agreement.

(c) Each facility must establish time limits, subject to approval by the COTP, for deployment of the containment material and equipment required by paragraph (a) of this section considering:

(1) Oil or hazardous material handling rates;

(2) Oil or hazardous material capacity susceptible to being spilled;

(3) Frequency of facility operations;

(4) Tidal and current conditions;

(5) Facility age and configuration; and

(6) Past record of discharges.

(d) The COTP may require a facility to surround each vessel conducting an oil or hazardous material transfer operation with containment material before commencing a transfer operation if—

(1) The environmental sensitivity of the area requires the added protection;

(2) The products transferred at the facility pose a significant threat to the environment;

(3) The past record of discharges at the facility is poor; or

(4) The size or complexity of the transfer operation poses a significant potential for a discharge of oil or hazardous material; and

(5) The use of vessel containment provides the only practical means to reduce the extent of environmental damage.

(e) Equipment and procedures maintained to satisfy the provisions of this chapter may be utilized in the planning requirements of subpart F of this part.

[CGD 75–124, 45 FR 7172, Jan. 31, 1980, as amended by CGD 86–034, 55 FR 36253, Sept. 4, 1990; CGD 93–056, 61 FR 41460, Aug. 8, 1996]

§ 154.550 Emergency shutdown.

(a) The facility must have an emergency means to enable the person in charge of the transfer on board the vessel, at that person's usual operating station, to stop the flow of oil or hazardous material from the facility to the vessel. The means must be—

(1) An electrical, pneumatic, or mechanical linkage to the facility; or

(2) An electronic voice communications system continuously operated by a person on the facility who can stop the flow of oil or hazardous material immediately.

(b) The point in the transfer system at which the emergency means stops the flow of oil or hazardous material on the facility must be located near the dock manifold connection to minimize the loss of oil or hazardous material in the event of the rupture or failure of the hose, loading arm, or manifold valve.

(c) For oil transfers, the means used to stop the flow under paragraph (a) of this section must stop that flow within—

(1) 60 seconds on any facility or portion of a facility that first transferred oil on or before November 1, 1980; and

(2) 30 seconds on any facility that first transfers oil after November 1, 1980.

(d) For hazardous material transfers, the means used to stop the flow under paragraph (a) of this section must stop that flow within—

(1) 60 seconds on any facility or portion of a facility that first transferred hazardous material before October 4, 1990; and

(2) 30 seconds on any facility that first transfers hazardous material on or after October 4, 1990.

[CGD 86–034, 55 FR 36253, Sept. 4, 1990]

§ 154.560 Communications.

(a) Each facility must have a means that enables continuous two-way voice communication between the person in charge of the vessel transfer operation and the person in charge of the facility transfer operation.

(b) Each facility must have a means, which may be the communications system itself, that enables a person on board a vessel or on the facility to effectively indicate the desire to use the means of communication required by paragraph (a) of this section.

(c) The means required by paragraph (a) of this section must be usable and effective in all phases of the transfer operation and all conditions of weather at the facility.

(d) A facility may use the system in § 154.550(a)(2) to meet the requirement of paragraph (a) of this section.

(e) Portable radio devices used to comply with paragraph (a) of this section during the transfer of flammable or combustible liquids must be marked as intrinsically safe by the manufacturer of the device and certified as intrinsically safe by a national testing laboratory or other certification organization approved by the Commandant as defined in 46 CFR 111.105–11. As an alternative to the marking requirement, facility operators may maintain documentation at the facility certifying that the portable radio devices in

use at the facility are in compliance with this section.

[CGD 75–124, 45 FR 7172, Jan. 31, 1980; 45 FR 43705, June 30, 1980, as amended by CGD 93–056, 61 FR 41460, Aug. 8, 1996]

§154.570 Lighting.

(a) Except as provided in paragraph (c) of this section, for operations between sunset and sunrise, a facility must have fixed lighting that adequately illuminates:

(1) Each transfer connection point on the facility;

(2) Each transfer connection point in use on any barge moored at the facility to or from which oil or hazardous material is being transferred;

(3) Each transfer operations work area on the facility; and

(4) Each transfer operation work area on any barge moored at the facility to or from which oil or hazardous material is being transferred.

(b) Where the illumination is apparently inadequate, the COTP may require verification by instrument of the levels of illumination. On a horizontal plane 3 feet above the barge deck or walking surface, illumination must measure at least:

(1) 5.0 foot candles at transfer connection points; and

(2) 1.0 foot candle in transfer operations work areas.

(c) For small or remote facilities, the COTP may authorize operations with an adequate level of illumination provided by the vessel or by portable means.

(d) Lighting must be located or shielded so as not to mislead or otherwise interfere with navigation on the adjacent waterways.

[CGD 75–124, 45 FR 7172, Jan. 31, 1980, as amended by CGD 86–034, 55 FR 36253, Sept. 4, 1990]

Subpart D—Facility Operations

§154.700 General.

No person may operate a facility unless the equipment, personnel, and operating procedures of that facility meet the requirements of this part.

[CGD 75–124, 45 FR 7173, Jan. 31, 1980]

§154.710 Persons in charge: Designation and qualification.

No person may serve, and the facility operator may not use the services of a person, as person in charge of facility transfer operations unless:

(a) The facility operator has designated that person as a person in charge;

(b) The person has had at least 48 hours of experience in transfer operations at a facility in operations to which this part applies. The person also has enough experience at the facility for which qualification is desired to enable the facility operator to determine that the person's experience is adequate;

(c) The person has completed a training and qualification program established by the facility operator and described in the Operations Manual in accordance with §154.310(a)(21), that provides the person with the knowledge and training necessary to properly operate the transfer equipment at the facility, perform the duties described in paragraph (d) of this section, follow the procedures required by this part, and fulfill the duties required of a person in charge during an emergency, except that the COTP may approve alternative experience and training requirements for new facilities; and

(d) The facility operator must certify that each person in charge has the knowledge of, and skills necessary to—

(1) The hazards of each product to be transferred;

(2) The rules in this part and in Part 156 of this chapter;

(3) The facility operating procedures as described in the operations manual;

(4) Vessel transfer systems, in general;

(5) Vessel transfer control systems, in general;

(6) Each facility transfer control system to be used;

(7) Follow local discharge reporting procedures; and

(8) Carry out the facility's response plan for discharge reporting and containment.

(e) Training conducted to comply with the hazard communication programs required by the Occupational Safety and Health Administration (OSHA) of the Department of Labor

(DOL) (29 CFR 1910.1200) or the Environmental Protection Agency (EPA) (40 CFR 311.1), or to meet the requirements of subpart F of this part may be used to satisfy the requirements in paragraphs (c) and (d) of this section, as long as the training addresses the requirements in paragraphs (c) and (d) of this section.

(Sec. 311(j)(1)(C) of the Federal Water Pollution Control Act (86 Stat. 816, 868); 33 U.S.C. 1161(j)(1)(C); EO 11548, 3 CFR, 1966–1970 Comp., p. 949; 49 CFR 1.46(m))

[CGD 71–160R, 37 FR 28253, Dec. 21, 1972, as amended by CGD 86–034, 55 FR 36253, Sept. 4, 1990; CGD 93–056, 61 FR 41460, Aug. 8, 1996]

§ 154.730 Persons in charge: Evidence of designation.

Each person in charge shall carry evidence of his designation as a person in charge when he is engaged in transfer operations unless such evidence is immediately available at the facility.

(Sec. 311(j)(1)(C) of the Federal Water Pollution Control Act (86 Stat. 816, 868); 33 U.S.C. 1161(j)(1)(C); EO 11548, 3 CFR, 1966–1970 Comp., p. 949; 49 CFR 1.46(m))

[CGD 71–160R, 37 FR 28253, Dec. 21, 1972]

§ 154.735 Safety requirements.

Each operator of a facility to which this part applies shall ensure that the following safety requirements are met at the facility:

(a) Access to the facility by firefighting personnel, fire trucks, or other emergency personnel is not impeded.

(b) Materials which are classified as hazardous under 49 CFR parts 170 through 179 are kept only in the quantities needed for the operation or maintenance of the facility and are stored in storage compartments.

(c) Gasoline or other fuel is not stored on a pier, wharf, or other similar structure.

(d) A sufficient number of fire extinguishers approved by an independent laboratory listed in 46 CFR 162.028–5 for fighting small, localized fires are in place throughout the facility and maintained in a ready condition.

(e) The location of each hydrant, standpipe, hose station, fire extinguisher, and fire alarm box is conspicuously marked and readily accessible.

(f) Each piece of protective equipment is ready to operate.

(g) Signs indicating that smoking is prohibited are posted in areas where smoking is not permitted.

(h) Trucks and other motor vehicles are operated or parked only in designated locations.

(i) All rubbish is kept in receptacles.

(j) All equipment with internal combustion engines used on the facility—

(1) Does not constitute a fire hazard; and

(2) Has a fire extinguisher attached that is approved by an independent laboratory listed in 46 CFR 162.028–5, unless such a fire extinguisher is readily accessible nearby on the facility.

(k) Spark arresters are provided on chimneys or appliances which—

(1) Use solid fuel; or

(2) Are located where sparks constitute a hazard to nearby combustible material.

(l) All welding or hot work conducted on or at the facility is the responsibility of the facility operator. The COTP may require that the operator of the facility notify the COTP before any welding or hot work operations are conducted. Any welding or hot work operations conducted on or at the facility must be conducted in accordance with NFPA 51B. The facility operator shall ensure that the following additional conditions or criteria are met:

(1) Welding or hot work is prohibited during gas freeing operations, within 30.5 meters (100 feet) of bulk cargo operations involving flammable or combustible materials, within 30.5 meters (100 feet) of fueling operations, or within 30.5 meters (100 feet) of explosives or 15.25 meters (50 feet) of other hazardous materials.

(2) If the welding or hot work is on the boundary of a compartment (i.e., bulkhead, wall or deck) an additional fire watch shall be stationed in the adjoining compartment.

(3) Personnel on fire watch shall have no other duties except to watch for the presence of fire and to prevent the development of hazardous conditions.

(4) Flammable vapors, liquids or solids must first be completely removed from any container, pipe or transfer line subject to welding or hot work.

(5) Tanks used for storage of flammable or combustible substances must

be tested and certified gas free prior to starting hot work.

(6) Proper safety precautions in relation to purging, inserting, or venting shall be followed for hot work on containers;

(7) All local laws and ordinances shall be observed;

(8) In case of fire or other hazard, all cutting, welding or other hot work equipment shall be completely secured.

(m) Heating equipment has sufficient clearance to prevent unsafe heating of nearby combustible material.

(n) Automotive equipment having an internal combustion engine is not refueled on a pier, wharf, or other similar structure.

(o) There are no open fires or open flame lamps.

(p) Electric wiring and equipment is maintained in a safe condition so as to prevent fires.

(q) Electrical wiring and electrical equipment installed after October 4, 1990, meet NFPA 70.

(r) Electrical equipment, fittings, and devices installed after October 4, 1990, show approval for that use by—

(1) Underwriters Laboratories;

(2) Factory Mutual Research Corporation; or

(3) Canadian Standards Association.

(s) Tank cleaning or gas freeing operations conducted by the facility on vessels carrying oil residues or mixtures shall be conducted in accordance with sections 9.1, 9.2, 9.3, and 9.5 of the OCIMF International Safety Guide for Oil Tankers and Terminals (ISGOTT), except that—

(1) Prohibitions in ISGOTT against the use of recirculated wash water do not apply if the wash water is first processed to remove product residues;

(2) The provision in ISGOTT section 9.2.10 concerning flushing the bottom of tanks after every discharge of leaded gasoline does not apply;

(3) The provision in ISGOTT section 9.2.11 concerning that removal of sludge, scale, and sediment does not apply if personnel use breathing apparatus which protect them from the tank atmosphere; and

(4) Upon the request of the facility owner or operator in accordance with § 154.107, the COTP may approve the use of alternative standards to ISGOTT if the COTP determines that the alternative standards provide an equal level of protection to the ISGOTT standards.

(t) Guards are stationed, or equivalent controls acceptable to the COTP are used to detect fires, report emergency conditions, and ensure that access to the marine transfer area is limited to—

(1) Personnel who work at the facility including persons assigned for transfer operations, vessel personnel, and delivery and service personnel in the course of their business;

(2) Coast Guard personnel;

(3) Other Federal, State, or local governmental officials; and

(4) Other persons authorized by the operator.

(u) Smoking shall be prohibited at the facility except that facility owners or operators may authorize smoking in designated areas if—

(1) Smoking areas are designated in accordance with local ordinances and regulations;

(2) Signs are conspicuously posted marking such authorized smoking areas; and

(3) ''No Smoking'' signs are conspicuously posted elsewhere on the facility.

(v) Warning signs shall be displayed on the facility at each shoreside entry to the dock or berth, without obstruction, at all times for fixed facilities and for mobile facilities during coupling, transfer operation, and uncoupling. The warning signs shall conform to 46 CFR 151.45–2(e)(1) or 46 CFR 153.955.

[CGD 86–034, 55 FR 36253, Sept. 4, 1990, as amended by CGD 93–056, 61 FR 41460, Aug. 8, 1996]

§ 154.740 Records.

Each facility operator shall maintain at the facility and make available for examination by the COTP:

(a) A copy of the letter of intent for the facility;

(b) The name of each person designated as a person in charge of transfer operations at the facility and certification that each person in charge has completed the training requirements of § 154.710 of this part;

(c) The date and result of the most recent test or examination of each

item tested or examined under § 156.170 of this chapter;

(d) The hose information required by § 154.500 (e) and (g) except that marked on the hose;

(e) The record of all examinations of the facility by the COTP within the last 3 years;

(f) The Declaration of Inspection required by § 156.150(f) of this chapter;

(g) A record of all repairs made within the last three years involving any component of the facility's vapor control system required by subpart E of this part;

(h) A record of all automatic shut downs of the facility's vapor control system within the last 3 years; and

(i) Plans, calculations, and specifications of the facility's vapor control system certified under § 154.804 of this part.

(j) If they are not marked as such, documentation that the portable radio devices in use at the facility under § 154.560 of this part are intrinsically safe.

(Approved by the Office of Management and Budget under control number 2115–0096)

[CGD 75–124, 45 FR 7173, Jan. 31, 1980, as amended by CGD 88–102, 55 FR 25429, June 21, 1990; CGD 86–034, 55 FR 36254, Sept. 4, 1990; CGD 93–056, 61 FR 41461, Aug. 8, 1996]

§ 154.750 Compliance with operations manual.

The facility operator shall require facility personnel to use the procedures in the operations manual prescribed by § 154.300 for operations under this part.

[CGD 75–124, 45 FR 7174, Jan. 31, 1980]

Subpart E—Vapor Control Systems

SOURCE: CGD 88–102, 55 FR 25429, June 21, 1990, unless otherwise noted.

§ 154.800 Applicability.

(a) Except as specified by paragraph (c) of this section, this subpart applies to:

(1) Each facility which collects vapors of crude oil, gasoline blends, or benzene emitted from vessel cargo tanks;

(2) A vessel which is not a tank vessel that has a vapor processing unit located on board for recovery, destruction, or dispersion of crude oil, gasoline blends, or benzene vapors from a tank vessel; and

(3) Certifying entities which review, inspect, test, and certify facility vapor control systems.

(b) A facility which collects vapors of flammable or combustible cargoes other than crude oil, gasoline blends, or benzene, must meet the requirements prescribed by the Commandant (G–MSO).

(c) A facility with an existing Coast Guard approved vapor control system which was operating prior to July 23, 1990 is subject only to § 154.850 of this subpart as long as it receives cargo vapor only from the specific vessels for which it was approved.

(d) This subpart does not apply to the collection of vapors of liquefied flammable gases as defined in 46 CFR 30.10–39.

(e) When a facility vapor control system which receives cargo vapor from a vessel is connected to a facility vapor control system that serves tank storage areas and other refinery processes, the specific requirements of this subpart apply between the vessel vapor connection and the point where the vapor control system connects to the facility's main vapor control system.

[CGD 88–102, 55 FR 25429, June 21, 1990, as amended by CGD 96–026, 61 FR 33666, June 28, 1996]

§ 154.802 Definitions.

As used in this subpart:

Certifying entity means an individual or organization accepted by the Commandant (G–MSO) to review plans and calculations for vapor control system designs, and to conduct initial inspections and witness tests of vapor control system installations.

Existing vapor control system means a vapor control system which was operating prior to July 23, 1990.

Facility vapor connection means the point in a facility's vapor collection system where it connects to a vapor collection hose or the base of a vapor collection arm.

Inerted means the oxygen content of the vapor space in a tank vessel's cargo tank is reduced to 8 percent by volume or less in accordance with the inert gas

requirements of 46 CFR 32.53 or 46 CFR 153.500.

Liquid knockout vessel means a device to separate liquid from vapor.

Maximum allowable transfer rate means the maximum volumetric rate at which a vessel may receive cargo or ballast.

New vapor control system means a vapor control system which is not an existing vapor control system.

Vapor balancing means the transfer of vapor displaced by incoming cargo from the tank of a vessel receiving cargo into a tank of the vessel or facility delivering cargo via a vapor collection system.

Vapor collection system means an arrangement of piping and hoses used to collect vapor emitted from a vessel's cargo tanks and transport the vapor to a vapor processing unit.

Vapor control system means an arrangement of piping and equipment used to control vapor emissions collected from a vessel, and includes the vapor collection system and the vapor processing unit.

Vapor destruction unit means a vapor processing unit that destroys cargo vapor by a means such as incineration.

Vapor dispersion system means a vapor processing unit which releases cargo vapor to the atmosphere through a venting system not located on the vessel being loaded or ballasted.

Vapor processing unit means the components of a vapor control system that recovers, destroys, or disperses vapor collected from a vessel.

Vapor recovery unit means a vapor processing unit that recovers cargo vapor by a non-destructive means such as lean oil absorbtion, carbon bed adsorption, or refrigeration.

Vessel vapor connection means the point in a vessel's fixed vapor collection system where it connects to a vapor collection hose or arm.

[CGD 88–102, 55 FR 25429, June 21, 1990, as amended by CGD 96–026, 61 FR 33666, June 28, 1996]

§ 154.804 Review, certification, and initial inspection.

(a) A new vapor control system installation must be certified by a certifying entity as meeting the requirements of this subpart prior to operating.

(b) [Reserved]

(c) An existing vapor control system installation that has been Coast Guard approved for operation with specific vessels must be certified by a certifying entity prior to receiving vapors from other vessels.

(d) Plans and information submitted to the certifying entity must include a qualitative failure analysis. The analysis must demonstrate the following:

(1) The vapor control system is designed to permit the system to continuously operate safely when receiving cargo vapors from tankships and barges over the full range of transfer rates expected at the facility;

(2) The vapor control system is provided with the proper alarms and automatic control systems to prevent unsafe operation;

(3) The vapor control system is equipped with sufficient automatic or passive devices to minimize damage to personnel, property, and the environment if an accident were to occur; and

(4) If a quantitative failure analysis is also conducted, the level of safety attained is at least one order of magnitude greater than that calculated for operating without a vapor control system.

NOTE: The *American Institute of Chemical Engineers* publication, ''Guidelines for Hazard Evaluation Procedures'' may be used as guidance when preparing a qualitative failure analysis. Military Standard MIL–STD–882B may be used as guidance when preparing a quantitative failure analysis.

(e) The certifying entity must conduct all initial inspections and witness all tests required to demonstrate that the facility:

(1) Conforms to certified plans and specifications;

(2) Meets the requirements of this subpart; and

(3) Is operating properly.

(f) Upon receipt of written certification from the certifying entity that a facility's vapor control system complies with the requirements of this part the COTP shall endorse the letter of adequacy required by § 154.325 of this part to indicate that the facility is acceptable for collecting vapors of crude oil, gasoline blends, benzene, or any other vapors for which it is certified.

(g) Any design or configuration alteration involving a certified vapor control system must be reviewed by a certifying entity. After conducting any inspections and witnessing tests necessary to verify that the modified vapor control system meets the requirements of this subpart, the certifying entity must recertify the installation.

(h) Certifications issued in accordance with this section and a copy of the plans, calculations, and specifications for the vapor control system must be maintained at the facility.

(i) A certifying entity accepted under § 154.806 of this subpart may not certify a facility vapor control system if it was involved in the design or installation of the system.

(Approved by the Office of Management and Budget under control number 2115–0581)

[CGD 88–102, 55 FR 25429, June 21, 1990, as amended by USCG–1998–3799, 63 FR 35531, June 30, 1998]

§ 154.806 Application for acceptance as a certifying entity.

(a) An individual or organization seeking acceptance as a certifying entity must apply in writing to the Commandant (G–MSO). Each application must be signed and certified to be correct by the applicant or, if the applicant is an organization, by an authorized officer or official representative of the organization, and must include a letter of intent from a facility owner or operator to use the services of the individual or organization to certify a vapor control system installation. Any false statement or misrepresentation, or the knowing and willful concealment of a material fact may subject the applicant to prosecution under the provisions of 18 U.S.C. 1001, and denial or termination of acceptance as a certifying entity.

(b) The applicant must possess the following minimum qualifications, and be able to demonstrate these qualifications to the satisfaction of the Commandant (G–MSO):

(1) The ability to review and evaluate design drawings and failure analyses;

(2) A knowledge of the applicable regulations of this subpart, including the standards incorporated by reference in these regulations;

(3) The ability to monitor and evaluate test procedures and results;

(4) The ability to perform inspections and witness tests of bulk liquid cargo handling systems;

(5) That it is not controlled by an owner or operator of a vessel or facility engaged in controlling vapor emissions; and

(6) That it is not dependent upon Coast Guard acceptance under this section to remain in business.

(c) Each application for acceptance must contain the following:

(1) The name and address of the applicant, including subsidiaries and divisions if applicable;

(2) A statement that the applicant is not controlled by an owner or operator of a vessel or facility engaged in controlling vapor emissions, or a full disclosure of any ownership or controlling interest held by such owners or operators;

(3) A description of the experience and qualifications of the person(s) who would be reviewing or testing the systems;

(4) A statement that the person(s) who would be reviewing or testing the systems is/are familiar with the regulations in this subpart; and

(5) A statement that the Coast Guard may verify the information submitted in the application and may examine the person(s) who would be reviewing or testing the systems to determine their qualifications.

(d) The acceptance of a certifying entity may be terminated by the Commandant (G–MSO) if the entity fails to properly review, inspect, or test a system in accordance with this subpart.

NOTE: A list of entities accepted to certify facility vapor control system installations is available from the Commandant (G–MSO).

(Approved by the Office of Management and Budget under control number 2115–0581)

[CGD 88–102, 55 FR 25429, June 21, 1990, as amended by CGD 96–026, 61 FR 33666, June 28, 1996]

§ 154.808 Vapor control system, general.

(a) A vapor control system design and installation must eliminate potential overfill hazards, overpressure and vacuum hazards, and sources of ignition to the maximum practical extent.

Each remaining hazard source which is not eliminated must be specifically addressed in the protection system design and operational requirements.

(b) Vapor collection system piping and fittings must be in accordance with ANSI B31.3 and designed for a maximum allowable working pressure of at least 150 psig. Valves and flanges must be in accordance with ANSI B16.5 or B16.24, 150 pound class.

(c) All electrical equipment used in a vapor control system must comply with NFPA 70.

(d) Any pressure, flow, or concentration indication required by this part must provide a remote indicator on the facility where the cargo transfer and vapor control systems are controlled.

(e) Any alarm condition specified in this part must activate an audible and visible alarm where the cargo transfer and vapor control systems are controlled.

(f) The vapor control system must be separated or insulated from external heat sources to limit vapor control system piping surface temperature to not more than 177 °C. (350 °F.) during normal operation.

(g) A means must be provided to eliminate any liquid condensate from the vapor collection system which carries over from the vessel or condenses as a result of an enrichment process.

(h) If a liquid knockout vessel is installed it must have:

(1) A means to indicate the level of liquid in the device;

(2) A high liquid level sensor that activates an alarm; and

(3) A high high level sensor that closes the remotely operated cargo vapor shutoff valve required by § 154.810(a) of this subpart and shuts down any compressors or blowers prior to liquid carrying over from the vessel to the compressor or blower.

(i) Vapor collection piping must be electrically grounded and electrically continuous.

(j) If the facility handles inerted vapors of cargoes containing sulfur, provisions must be made to control heating from pyrophoric iron sulfide deposits in the vapor collection line.

§ 154.810 Vapor line connections.

(a) A remotely operated cargo vapor shutoff valve must be installed in the vapor collection line between the facility vapor connection and the nearest point where any inerting, enriching, or diluting gas is introduced into the vapor collection line or where a detonation arrester is fitted. The valve must:

(1) Close within thirty (30) seconds after detection of a shutdown condition by a component required by this subpart;

(2) Close automatically if the control signal is lost;

(3) Activate an alarm when a signal to shut down is received;

(4) Be capable of manual operation or manual activation;

(5) Have a local valve position indicator or be designed so that the valve position can be readily determined from the valve handle or valve stem position; and

(6) If the valve seat is fitted with resilient material, not allow appreciable leakage when the resilient material is damaged or destroyed.

(b) Except when a vapor collection arm is used, the last 1.0 meter (3.3 feet) of vapor piping before the facility vapor connection must be:

(1) Painted red/yellow/red with:

(i) The red bands 0.1 meter (0.33 feet) wide, and

(ii) The middle yellow band 0.8 meter (2.64 feet) wide; and

(2) Labeled ''VAPOR'' in black letters at least 50 millimeters (2 inches) high.

(c) Each facility vapor connection flange must have a permanently attached 0.5 inch diameter stud at least 1.0 inch long projecting outward from the flange face. The stud must be located at the top of the flange, midway between bolt holes, and in line with the bolt hole pattern.

(d) Each hose used for transferring vapors must:

(1) Have a design burst pressure of at least 25 psig;

(2) Have a maximum allowable working pressure of at least 5 psig;

(3) Be capable of withstanding at least 2.0 psi vacuum without collapsing or constricting;

(4) Be electrically continuous with a maximum resistance of ten thousand (10,000) ohms;

(5) Have flanges with:

(i) A bolt hole arrangement complying with the requirements for 150 pound class ANSI B16.5 flanges, and

(ii) One or more 0.625 inch diameter holes in the flange located midway between bolt holes and in line with the bolt hole pattern;

(6) Be abrasion resistant and resistant to kinking; and

(7) Have the last 1.0 meter (3.3 feet) of each end of the vapor hose marked in accordance with paragraph (b) of this section.

(e) Vapor hose handling equipment must be provided with hose saddles which provide adequate support to prevent kinking or collapse of hoses.

(f) Fixed vapor collection arms must:

(1) Meet the requirements of paragraphs (d)(1) through (d)(5) of this section;

(2) Have the last 1.0 meter (3.3 feet) of the arm marked in accordance with paragraph (b) of this section.

(g) The facility vapor connection must be electrically insulated from the vessel vapor connection in accordance with section 6.10 of the OCIMF International Safety Guide for Oil Tankers and Terminals.

(h) A vapor collection system fitted with an enriching system that operates at a positive gauge pressure at the facility vapor connection must be fitted with:

(1) A manual isolation valve between each facility vapor connection and the remotely operated cargo vapor shutoff valve required by paragraph (a) of this section; and

(2) A means to prevent backflow of enriched vapor to the vessel's vapor collection system.

§ 154.812 Facility requirements for vessel liquid overfill protection.

(a) Each facility which receives cargo vapor from a tank barge which is fitted with overfill protection in accordance with 46 CFR 39.20–9(a) as its only means of overfill protection must provide a 120 volt, 20 amp explosion proof receptacle which meets:

(1) ANSI/NEMA WD6;

(2) NFPA 70, Articles 410–57 and 501–12; and

(3) 46 CFR 111.105–9.

(b) Each facility that receives cargo vapor from a tank barge fitted with an intrinsically safe cargo tank level sensor system complying with 46 CFR 39.20–9(b) as its only means of overfill protection must have an overfill control panel on the dock capable of powering and receiving an alarm and shutdown signal from the cargo tank level sensor system that:

(1) Closes the remotely operated cargo vapor shutoff valve required by § 154.810(a) of this subpart and activates the emergency shutdown system required by § 154.550 of this part when:

(i) A tank overfill signal is received from the barge, or

(ii) Electrical continuity of the cargo tank level sensor system is lost;

(2) Activates an alarm which is audible and visible to barge personnel and facility personnel when a tank overfill signal, or an optional high level signal corresponding to a liquid level lower than the tank overfill sensor setting, is received from the barge;

(3) Has a means to electrically and mechanically test the alarms and automatic shutdown systems prior to transferring cargo to or ballasting the tank barge;

(4) Has suitable means, such as approved intrinsic safety barriers able to accept passive devices, to ensure that the overfill and optional alarm circuits on the barge side of the overfill control panel, including cabling, normally closed switches, and pin and sleeve connectors, are intrinsically safe;

(5) Is labeled with the maximum allowable inductance and capacitance to be connected to the panel, as specified by the equipment manufacturer; and

(6) Has a female connecting plug for the tank barge level sensor system with a 5 wire, 16 amp connector body meeting IEC 309–1/309–2 which is:

(i) Configured with pins S2 and R1 for the tank overfill sensor circuit, pin G connected to the cabling shield, and pins N and T3 reserved for an optional high level alarm connection;

(ii) Labeled ''Connector for Barge Overflow Control System''; and

(iii) Connected to the overfill control panel by a shielded flexible cable.

§ 154.814 Facility requirements for vessel vapor overpressure and vacuum protection.

(a) A facility's vapor collection system must have the capacity for collecting cargo vapor at a rate of not less than 1.25 times the facility's maximum liquid transfer rate for cargo for which vapor collection is required plus any inerting, diluting, or enriching gas which may be added to the system, unless the vapor growth for turbulent loading of the most volatile liquid handled by the facility is less than 25 percent.

(b) A facility vapor collection system must maintain the pressure in a vessel's cargo tanks between 80 percent of the highest setting of any of the vessel's vacuum relief valves and 80 percent of the lowest setting of any of the vessel's pressure relief valves for a non-inerted tank vessel, and between 0.2 psig and 80 percent of the lowest setting of any of the vessel's pressure relief valves for an inerted tank vessel. The system must be capable of maintaining the pressure in the vessel's cargo tanks within this range at any cargo transfer rate less than or equal to the maximum transfer rate determined at the pre-transfer conference required by § 156.120(w) of this chapter.

(c) The pressure measured at the facility vapor connection must be corrected for pressure drops across the vessel's vapor collection system and the vapor collection hose or arm.

(d) A pressure sensing device must be provided which activates an alarm when the pressure at the facility vapor connection exceeds either the pressure corresponding to the upper pressure determined in paragraph (b) of this section or a lower pressure agreed upon at the pre-transfer conference required by § 156.120(w) of this chapter.

(e) A pressure sensing device must be provided which activates an alarm when the pressure at the facility vapor connection falls below either the pressure corresponding to the lower pressure determined in paragraph (b) of this section or a higher pressure agreed upon at the pre-transfer conference required by § 156.120(w) of this chapter.

(f) A pressure sensing device must be provided which activates the emergency shutdown system required by § 154.550 of this part and closes the remotely operated cargo vapor shutoff valve required by § 154.810(a) of this subpart when the pressure at the facility vapor connection exceeds 2.0 psi, or a lower pressure agreed upon at the pre-transfer conference required by § 156.120(w) of this chapter. The sensing device must be independent of the device used to activate the alarm required by paragraph (d) of this section.

(g) A pressure sensing device must be provided which closes the remotely operated cargo vapor shutoff valve required by § 154.810(a) of this subpart when the vacuum at the facility vapor connection is more than 1.0 psi, or a lesser vacuum set at the pre-transfer conference required by § 156.120(w) of this chapter. The sensing device must be independent of the device used to activate the alarm required by paragraph (e) of this section.

(h) The pressure sensing devices required by paragraphs (d) and (f) of this section must be located in the vapor collection line between the facility vapor connection and the manual isolation valve, if required by § 154.810(h) of this subpart, unless an interlock is provided which prevents operation of the system when the isolation valve is closed.

(i) A pressure indicating device must be provided which indicates the pressure in the vapor collection line.

(j) If a compressor, blower, or eductor capable of drawing more than 1.0 psi vacuum is used to draw vapor from the vessel, a vacuum relief valve must be installed in the vapor collection line between the compressor, blower, or eductor and the facility vapor connection, which:

(1) Relieves at a pressure such that the pressure in the vapor collection system at the facility vapor connection does not exceed 1.0 psi vacuum;

(2) Has a relieving capacity equal to or greater than the capacity of the compressor, blower, or eductor;

(3) Has a flame screen fitted at the vacuum relief opening; and

(4) Has been tested for relieving capacity in accordance with paragraph 1.5.1.3 of API 2000 with a flame screen fitted.

(k) When a facility collects cargo vapor through an undersea pipeline

from a vessel moored offshore, the vacuum relief valve may be set at a vacuum greater than 1.0 psi vacuum provided the pressure controls take into account the pressure drop across the vessel's vapor collection system, any vapor collection hoses, and the undersea pipeline as a function of the actual transfer rate.

(l) If the pressure in the vapor collection system can exceed 2.0 psig due to a malfunction in an inerting, enriching, or diluting system a pressure relief valve must:

(1) Be installed between the point where inerting, enriching, or diluting gas is introduced into the vapor collection system and the facility vapor connection;

(2) Relieve at a pressure such that the pressure in the vapor collection system at the facility vapor connection does not exceed 2.0 psig;

(3) Have a relieving capacity equal to or greater than the maximum capacity of the facility inerting, enriching, or diluting gas source;

(4) If not designed to insure a minimum vapor discharge velocity of 30 meters (98.4 ft.) per second, have a flame screen fitted at the discharge opening; and

(5) Have been tested for relieving capacity in accordance with paragraph 1.5.1.3 of API 2000.

(m) The relieving capacity test required by paragraph (l)(5) must be carried out with a flame screen fitted at the discharge opening if the pressure relief valve is not designed to insure a minimum vapor discharge velocity of 30 meters (98.4 ft.) per second.

[CGD 88–102, 55 FR 25429, June 21, 1990, as amended by USCG–1998–3799, 63 FR 35531, June 30, 1998]

§ 154.820 Fire, explosion, and detonation protection.

(a) A vapor control system with a single facility vapor connection that receives vapor only from a vessel with inerted cargo tanks and processes vapor with a vapor recovery unit must:

(1) Be capable of inerting the vapor collection line in accordance with § 154.824(a) of this subpart prior to receiving vapors from the vessel;

(2) Have at least one oxygen analyzer that samples the vapor concentration continuously at a point not more than 6 meters (19.7 ft.) from the facility vapor connection; and

(3) Meet § 154.824 (f)(1), (f)(2), (g), (h)(2), and (h)(3) of this subpart.

(b) A vapor control system with a single facility vapor connection that receives vapor only from a vessel with inerted cargo tanks and processes vapor with a vapor destruction unit must:

(1) Have a detonation arrester located not more than 6 meters (19.7 ft.) from the facility vapor connection; or

(2) Have an inerting system that meets the requirements of § 154.824 of this subpart.

(c) A vapor control system with a single facility vapor connection that receives vapor from a vessel with cargo tanks that are not inerted and processes vapor with a vapor recovery unit must:

(1) Have a detonation arrester located not more than 6 meters (19.7 ft.) from the facility vapor connection; or

(2) Have an inerting, enriching, or diluting system that meets the requirements of § 154.824 of this subpart.

(d) A vapor control system with a single facility vapor connection that receives vapor from a vessel with cargo tanks that are not inerted and processes the vapor with a vapor destruction unit must:

(1) Have a detonation arrester located not more than 6 meters (19.7 ft.) from the facility vapor connection; and

(2) Have an inerting, enriching, or diluting system that meets the requirements of § 154.824 of this subpart.

(e) A vapor control system with multiple facility vapor connections that processes vapor with a vapor recovery unit must have a detonation arrester located not more than 6 meters (19.7 ft.) from each facility vapor connection.

(f) A vapor control system with multiple facility vapor connections that processes vapor with a vapor destruction unit must:

(1) Have a detonation arrester located not more than 6 meters (19.7 ft.) from each facility vapor connection; and

(2) Have an inerting, enriching, or diluting system that meets the requirements of § 154.824 of this subpart.

(g) A vapor control system that uses a vapor balancing system in which cargo vapor from a vessel is transferred through the facility vapor collection system to facility storage tanks must:

(1) Have a detonation arrester located not more than 6 meters (19.7 ft.) from each facility vapor connection;

(2) Have a detonation arrester located within the storage tank containment area as close as practical to the vapor return connection of each facility storage tank; and

(3) Have facility storage tank high level alarm systems and facility storage tank overfill control systems arranged to prevent cargo from entering the vapor return line.

(h) Except for a discharge vent from a vapor destruction unit, each outlet of a vapor control system that vents to atmosphere and is not isolated with a pressure-vacuum relief valve must have a flame arrester located at the outlet.

§ 154.822 Detonation arresters, flame arresters, and flame screens.

(a) Each detonation arrester required by this part must:

(1) Be capable of arresting a detonation from either side of the device; and

(2) Be acceptable to the Commandant (G–MSO). A detonation arrester designed, built, and tested in accordance with appendix A of this part will be acceptable to the Commandant (G–MSO).

(b) Each flame arrester required by this part must be acceptable to the Commandant (G–MSO). A flame arrester designed, built, and tested in accordance with appendix B of this part will be acceptable to the Commandant (G–MSO).

(c) Each flame screen required by this part must be either a single screen of corrosion resistant wire of at least 30 by 30 mesh, or two screens, both of corrosion resistant wire, of at least 20 by 20 mesh, spaced not less than 12.7 millimeters (1½ in.) or more than 38.1 millimeters (1½ in.) apart.

[CGD 88–102, 55 FR 25429, June 21, 1990; 55 FR 39270, Sept. 26, 1990, as amended by CGD 96–026, 61 FR 33666, June 28, 1996]

§ 154.824 Inerting, enriching, and diluting systems.

(a) A vapor control system which uses inerting, enriching, or diluting gas must be capable of inerting, enriching, or diluting the vapor collection line prior to receiving cargo vapor.

(b) Except as permitted by § 154.820(a) of this subpart, a vapor control system which uses an inerting, enriching, or diluting system must be equipped with a gas injection and mixing arrangement located as close as practical but not more than 10 meters (32.8 ft.) from the facility vapor connection that ensures complete mixing of the gases within 20 pipe diameters of the injection point;

(c) A vapor control system that uses an inerting or enriching system may not be operated at a vacuum after the injection point unless:

(1) There are no sleeve-type pipe couplings, vacuum relief valves, or other devices which could allow air into the vapor collection system downstream of the injection point; or

(2) An additional analyzer is used to monitor the downstream vapor concentration and a means is provided to inject additional inerting or enriching gas.

(d) A vapor control system that uses analyzers to control the amount of inerting, enriching, or diluting gas injected into the vapor collection line must be equipped with at least 2 analyzers. The analyzers must be connected so that:

(1) When oxygen analyzers are used, the higher oxygen concentration reading controls the inerting or enriching system and activates the alarm and automatic shutdown system required by paragraph (h), (j) or (k)(2) of this section;

(2) When hydrocarbon analyzers are used, the lower hydrocarbon concentration reading controls the enriching system and activates the alarm and automatic shutdown system required by paragraph (i) or (k)(1) of this section; and

(3) When hydrocarbon analyzers are used, the higher hydrocarbon concentration reading controls the diluting system and activates the alarm and automatic shutdown system required by paragraph (l) of this section.

(e) A vapor control system that uses volumetric measurements to control the amount of inerting, enriching, or diluting gas injected into the vapor collection line must be equipped with at least one analyzer to activate the alarms and automatic shutdown systems required by this section.

(f) Each oxygen or hydrocarbon analyzer required by this section must:

(1) Be installed in accordance with API Recommended Practice 550;

(2) Have a response time of not more than 30 seconds from the time the vapor is sampled; and

(3) Sample the vapor concentration continuously not more than 30 pipe diameters from the gas injection point.

(g) Oxygen analyzers which operate at elevated temperatures (i.e. zirconia oxide or thermomagnetic) must not be used.

(h) An inerting system must:

(1) Supply sufficient inert gas to the vapor stream to ensure that the oxygen concentration throughout the vapor collection system is maintained below 8.0 percent by volume;

(2) Activate an alarm when the oxygen concentration in the vapor collection line exceeds 8.0 percent by volume;

(3) Close the remotely operated cargo vapor shutoff valve required by § 154.810(a) of this part when the oxygen concentration in the vapor collection line exceeds 9.0 percent by volume; and

(4) If a combustion device is used to produce the inert gas, have a hydraulic seal and non-return valve between the combustion device and the vapor collection line.

(i) An enriching system must:

(1) Supply sufficient compatible hydrocarbon vapor to the vapor stream to ensure that the hydrocarbon concentration throughout the vapor collection system is maintained above 170 percent by volume of the upper flammable limit;

(2) Activate an alarm when the hydrocarbon concentration in the vapor collection line falls below 170 percent by volume of the upper flammable limit; and

(3) Close the remotely operated cargo vapor shutoff valve required by § 154.810(a) of this subpart when the hydrocarbon concentration in the vapor collection line falls below 150 percent by volume of the upper flammable limit.

(j) Oxygen analyzers may be used in lieu of hydrocarbon analyzers in an enriching system at a facility that receives cargo vapor only from a vessel with non-inerted cargo tanks, provided that the analyzers:

(1) Activate an alarm when the oxygen concentration in the vapor collection line exceeds 15.5 percent by volume; and

(2) Close the remotely operated cargo vapor shutoff valve required by § 154.810(a) of this subpart when the oxygen concentration in the vapor collection line exceeds 16.5 percent by volume.

(k) An enriching system may be used in a vapor collection system that receives cargo vapor from a vessel with inerted cargo tanks if:

(1) Hydrocarbon analyzers are used to comply with paragraph (i)(2) and (i)(3) of this section; or

(2) If oxygen analyzers are used, the analyzers activate an alarm when the oxygen concentration in the vapor collection line exceeds 8 percent by volume, and close the remotely operated cargo vapor shutoff valve required by § 154.810(a) of this subpart when the oxygen concentration exceeds 9 percent by volume.

(l) An air dilution system must:

(1) Supply sufficient additional air to the vapor stream to ensure that the hydrocarbon concentration throughout the vapor collection system is maintained below 30 percent by volume of the lower flammable limit;

(2) Activate an alarm when the hydrocarbon concentration in the vapor collection line exceeds 30 percent by volume of the lower flammable limit; and

(3) Close the remotely operated cargo vapor shutoff valve required by § 154.810(a) of this subpart when the hydrocarbon concentration in the vapor collection line exceeds 50 percent by volume of the lower flammable limit.

[CGD 88–102, 55 FR 25429, June 21, 1990; 55 FR 39270, Sept. 26, 1990]

§ 154.826 Vapor compressors and blowers.

(a) Each inlet and outlet to a compressor or blower which handles vapor

that has not been inerted, enriched, or diluted in accordance with § 154.824 of this subpart must be fitted with:

(1) A detonation arrester;

(2) A flame arrester; or

(3) An explosion suppression system acceptable to the Commandant (G–MSO).

(b) If a reciprocating or screw-type compressor handles vapor in the vapor collection system, it must be provided with indicators and audible and visible alarms to warn against the following conditions:

(1) Excessive discharge gas temperature at each compressor chamber or cylinder;

(2) Excessive cooling water temperature;

(3) Excessive vibration;

(4) Low lube oil level;

(5) Low lube oil pressure; and

(6) Excessive shaft bearing temperatures.

(c) If a liquid ring-type compressor handles vapor in the vapor collection system, it must be provided with indicators and audible and visible alarms to warn against the following conditions:

(1) Low level of liquid sealing medium;

(2) Lack of flow of liquid sealing medium;

(3) Excessive temperature of the liquid sealing medium;

(4) Low lube oil level;

(5) Low lube oil pressure, if pressurized lubricating system; and

(6) Excessive shaft bearing temperature.

(d) If a centrifugal compressor, fan, or lobe blower handles vapor in the vapor collection system, construction of the blades and/or housing must meet one of the following:

(1) Blades or housing of nonmetallic construction;

(2) Blades and housing of nonferrous material;

(3) Blades and housing of corrosion resistant steel;

(4) Ferrous blades and housing with one-half inch or more design tip clearance; or

(5) Blades of aluminum or magnesium alloy and a ferrous housing with a nonferrous insert sleeve at the periphery of the impeller.

[CGD 88–102, 55 FR 25429, June 21, 1990, as amended by CGD 96–026, 61 FR 33666, June 28, 1996]

§ 154.828 Vapor recovery and vapor destruction units.

(a) The inlet to a vapor recovery unit which receives cargo vapor that has not been inerted, enriched, or diluted in accordance with § 154.824 of this subpart must be fitted with one of the following:

(1) A detonation arrester;

(2) A flame arrester; or

(3) An explosion suppression system acceptable to the Commandant (G–MSO).

(b) The inlet to a vapor destruction unit must:

(1) Have a liquid seal; and

(2) Have two quick-closing stop valves installed in the vapor line.

(c) A vapor destruction unit must:

(1) Not be within 30 meters (98.8 ft.) of any tank vessel berth or mooring at the facility;

(2) Have a flame arrester or detonation arrester fitted in the vapor line; and

(3) Alarm and shut down when a flame is detected on the flame arrester or detonation arrester.

(d) When a vapor destruction unit shuts down or has a flame-out condition the vapor destruction unit control system must:

(1) Close the quick-closing stop valves required by paragraph (b)(2) of this section; and

(2) Close the remotely operated cargo vapor shutoff valve required by § 154.810(a) of this subpart.

[CGD 88–102, 55 FR 25429, June 21, 1990, as amended by CGD 96–026, 61 FR 33666, June 28, 1996]

§ 154.840 Personnel training.

(a) A person in charge of a transfer operation utilizing a vapor control system must have completed a training program covering the particular system installed at the facility. Training must include drills or demonstrations using the installed vapor control system covering normal operations and emergency procedures.

(b) The training program required by paragraph (a) of this section must cover the following subjects:

(1) Purpose of a vapor control system;

(2) Principles of the vapor control system;

(3) Components of the vapor control system;

(4) Hazards associated with the vapor control system;

(5) Coast Guard regulations in this subpart;

(6) Operating procedures, including:

(i) Testing and inspection requirements,

(ii) Pre-transfer procedures,

(iii) Connection sequence,

(iv) Start-up procedures, and

(v) Normal operations; and

(7) Emergency procedures.

§ 154.850 Operational requirements.

(a) A facility must receive vapors only from a vessel which has its certificate of inspection or certificate of compliance endorsed in accordance with 46 CFR 39.10–13(e).

(b) The following must be performed not more than 24 hours prior to each transfer operation:

(1) All alarms and automatic shutdown systems required by this part must be tested; and

(2) The analyzers required by § 154.820(a), § 154.824 (d) and (e) of this subpart must be checked for calibration by use of a span gas.

(c) The position of all valves in the vapor line between the vessel's tanks and the facility vapor collection system must be verified prior to the start of the transfer operation.

(d) A tank barge overfill control system that meets the requirements of 46 CFR 39.20–9(b) must not be connected to an overfill sensor circuit that exceeds the system's rated cable length, inductance, and capacitance.

(e) When vapor is being received from a vessel with inerted cargo tanks, the remotely operated cargo vapor shutoff valve required by § 154.810(a) of this subpart must not be opened until the pressure at the facility vapor connection exceeds the pressure on the downstream side of the remotely operated cargo vapor shutoff valve.

(f) The initial cargo transfer rate must not exceed the rate agreed upon at the pre-transfer conference required by § 156.120(w) of this chapter and 46 CFR 39.30–1(h).

(g) The cargo transfer rate must not exceed the maximum allowable transfer rate as determined by the lesser of the following:

(1) A transfer rate corresponding to the maximum vapor processing rate for the vapor control system, as specified in the facility operations manual required by § 154.300 of this chapter; or

(2) The vessel's maximum transfer rate determined in accordance with 46 CFR 39.30–1(d).

(h) While transferring cargo to a vessel connected to a vapor control system, compressed air or gas may be used to clear cargo hoses and loading arms, but must not be used to clear cargo lines.

(i) If one of the two analyzers required by § 154.824(d) of this subpart becomes inoperable during a transfer operation, the operation may continue provided the remaining analyzer remains operational; however, no further transfer operations may be started until the inoperable analyzer is replaced or repaired.

(j) Whenever a condition results in a shutdown of the vapor control system, the person in charge shall immediately terminate cargo loading.

(k) If it is suspected that a flare in the vapor control system has had a flare-back, or if a flame is detected on the flame arrester required by § 154.828(c)(2) of this subpart, the transfer operation must be stopped and not be restarted until the flame arrester has been inspected and found to be in satisfactory condition.

Subpart F—Response Plans for Oil Facilities

SOURCE: CGD 91–036, 61 FR 7917, Feb. 29, 1996, unless otherwise noted.

§ 154.1010 Purpose.

This subpart establishes oil spill response plan requirements for all marine transportation-related (MTR) facilities (hereafter also referred to as facilities) that could reasonably be expected to cause substantial harm or

significant and substantial harm to the environment by discharing oil into or on the navigable waters, adjoining shorelines, or exclusive economic zone. The development of a response plan prepares the facility owner or operator to respond to an oil spill. These requirements specify criteria to be used during the planning process to determine the appropriate response resources. The specific criteria for response resources and their arrival times are not performance standards. The criteria are based on a set of assumptions that may not exist during an actual oil spill incident.

§154.1015 Applicability.

(a) This subpart applies to all MTR facilities that because of their location could reasonably be expected to cause at least substantial harm to the environment by discharging oil into or on the navigable waters, adjoining shorelines, or exclusive economic zone.

(b) The following MTR facilities that handle, store, or transport oil, in bulk, could reasonably be expected to cause substantial harm to the environment by discharging oil into or on the navigable waters or adjoining shorelines and are classified as substantial harm MTR facilities:

(1) Fixed MTR onshore facilities capable of transferring oil to or from a vessel with a capacity of 250 barrels or more and deepwater ports;

(2) Mobile MTR facilities used or intended to be used to transfer oil to or from a vessel with a capacity of 250 barrels or more; and

(3) Those MTR facilities specifically designated as substantial harm facilities by the COTP under §154.1016.

(c) The following MTR facilities that handle, store, or transport oil in bulk could not only reasonably be expected to cause substantial harm, but also significant and substantial harm, to the environment by discharging oil into or on the navigable waters, adjoining shorelines, or exclusive economic zone and are classified as significant and substantial harm MTR facilities:

(1) Deepwater ports, and fixed MTR onshore facilities capable of transferring oil to or from a vessel with a capacity of 250 barrels or more except for facilities that are part of a non-transportation-related fixed onshore facility with a storage capacity of less than 42,000 gallons; and

(2) Those MTR facilities specifically designated as significant and substantial harm facilities by the COTP under §154.1016.

(d) An MTR facility owner or operator who believes the facility is improperly classified may request review and reclassification in accordance with §154.1075.

§154.1016 Facility classification by COTP.

(a) The COTP may upgrade the classification of:

(1) An MTR facility not specified in §154.1015 (b) or (c) to a facility that could reasonably be expected to cause substantial harm to the environment; or

(2) An MTR facility specified in §154.1015(b) to a facility that could reasonably be expected to cause significant and substantial harm to the environment.

(b) The COTP may downgrade, the classification of:

(1) An MTR facility specified in §154.1015(c) to a facility that could reasonably be expected to cause substantial harm to the environment; or

(2) An MTR facility specified in §154.1015(b) to a facility that could not reasonably be expected to cause substantial, or significant and substantial harm to the environment.

(3) The COTP will consider downgrading an MTR facility's classification only upon receiving a written request for a downgrade of classification from the facility's owner or operator.

(c) When changing a facility classification the COTP may, as appropriate, consider all relevant factors including, but not limited to: Type and quantity of oils handled in bulk; facility spill history; age of facility; proximity to public and commercial water supply intakes; proximity to navigable waters based on the definition of navigable waters in 33 CFR 2.05–25; and proximity to fish and wildlife and sensitive environments.

154.1017 Response plan submission requirements.

(a) The owner or operator of an MTR facility identified only in §154.1015(b), or designated by the COTP as a substantial harm facility, shall prepare and submit to the cognizant COTP a response plan that meets the requirements of §§154.1030, 154.1040, 154.1045, or §154.1047, as appropriate. This applies to:

(1) A mobile MTR facility used or intended to be used to transfer oil to or from a vessel with a capacity of 250 barrels or more; and

(2) A fixed MTR facility specifically designated as a substantial harm facility by the COTP under §154.1016.

(b) The owner or operator of an MTR facility identified in §154.1015(c) or designated by the COTP as a significant and substantial harm facility shall prepare and submit for review and approval of the cognizant COTP a response plan that meets the requirements of §§154.1030, 154.1035, 154.1045, or 154.1047, as appropriate. This applies to:

(1) A fixed MTR facility capable of transferring oil, in bulk, to or from a vessel with a capacity of 250 barrels or more; and

(2) An MTR facility specifically designated as a significant and substantial harm facility by the COTP under §154.1016.

(c) In addition to the requirements in paragraphs (a) and (b) of this section, the response plan for a mobile MTR facility must meet the requirements of §154.1041 subpart F.

§154.1020 Definitions.

Except as otherwise defined in this section, the definition in 33 CFR 154.105 apply to this subpart and subparts H and I.

Adverse weather means the weather conditions that will be considered when identifying response systems and equipment in a response plan for the applicable operating environment. Factors to consider include, but are not limited to, significant wave height as specified in §§154.1045, 154.1047, 154.1225, or 154.1325, as appropriate; ice conditions, temperatures, weather-related visibility, and currents within the COTP zone in which the systems or equipment are intended to function.

Animal fat means a non-petroleum oil, fat, or grease derived from animals, and not specifically identified elsewhere in this part.

Average most probable discharge means a discharge of the lesser of 50 barrels or 1 percent of the volume of the worst case discharge.

Captain of the Port (COTP) Zone means a zone specified in 33 CFR part 3 and, where applicable, the seaward extension of that zone to the outer boundary of the exclusive economic zone (EEZ).

Complex means a facility possessing a combination of marine-transportation related and non-transportation-related components that is subject to the jurisdiction of more than one Federal agency under section 311(j) of the Clean Water Act.

Exclusive economic zone (EEZ) means the zone contiguous to the territorial sea of the United States extending to a distance up to 200 nautical miles from the baseline from which the breadth of the territorial sea is measured.

Facility that could reasonably be expected to cause significant and substantial harm means any MTR facility (including piping and any structures that are used for the transfer of oil between a vessel and a facility) classified as a ''significant and substantial harm'' facility under §154.1015(c) including a facility specifically designated by the COTP under §154.1016(a).

Facility that could reasonably be expected to cause substantial harm means any MTR facility classified as a ''substantial harm'' facility under §154.1015(b) including a facility specifically designated by the COTP under §154.1016(a).

Fish and Wildlife and Sensitive Environment means areas that may be identified by either their legal designation or by Area Committees in the applicable Area Contingency Plan (ACP) (for planning) or by members of the Federal On-Scene Coordinator's spill response structure (during responses). These areas may include: Wetlands, national and state parks, critical habitats for endangered or threatened species, wilderness and natural resource areas, marine sanctuaries and estuarine reserves, conservation areas, preserves, wildlife areas, wildlife refuges, wild

and scenic rivers, areas of economic importance, recreational areas, national forests, Federal and state lands that are research areas, heritage program areas, land trust areas, and historical and archaeological sites and parks. These areas may also include unique habitats such as: aquaculture sites and agricultural surface water intakes, bird nesting areas, critical biological resource areas, designated migratory routes, and designated seasonal habitats.

Great Lakes means Lakes Superior, Michigan, Huron, Erie, and Ontario, their connecting and tributary waters, the Saint Lawrence River as far as Saint Regis, and adjacent port areas.

Higher volume port area means the following ports:

(1) Boston, MA.

(2) New York, NY.

(3) Delaware Bay and River to Philadelphia, PA.

(4) St. Croix, VI.

(5) Pascagoula, MS.

(6) Mississippi River from Southwest Pass, LA. to Baton Rouge, LA.

(7) Louisiana Offshore Oil Port (LOOP), LA.

(8) Lake Charles, LA.

(9) Sabine-Neches River, TX.

(10) Galveston Bay and Houston Ship Channel, TX.

(11) Corpus Christi, TX.

(12) Los Angeles/Long Beach harbor, CA.

(13) San Francisco Bay, San Pablo Bay, Carquinez Strait, and Suisun Bay to Antioch, CA.

(14) Straits of Juan De Fuca from Port Angeles, WA, to and including Puget Sound, WA.

(15) Prince William Sound, AK.

Inland area means the area shoreward of the boundary lines defined in 46 CFR part 7, except in the Gulf of Mexico. In the Gulf of Mexico, it means the area shoreward of the lines of demarcation (COLREG lines) defined in §§ 80.740 through 80.850 of this chapter. The inland area does not include the Great Lakes.

Marine transportation-related facility (MTR facility) means any onshore facility or segment of a complex regulated under section 311(j) of the Federal Water Pollution Control Act (FWPCA) by two or more Federal agencies, including piping and any structure used or intended to be used to transfer oil to or from a vessel, subject to regulation under this part and any deepwater port subject to regulation under part 150 of this chapter. For a facility or segment of a complex regulated by two or more Federal agencies under section 311(j) of the FWPCA, the MTR portion of the complex extends from the facility oil transfer system's connection with the vessel to the first valve inside the secondary containment surrounding tanks in the non-transportation-related portion of the facility or, in the absence of secondary containment, to the valve or manifold adjacent to the tanks comprising the non-transportation-related portion of the facility, unless another location has otherwise been agreed to by the COTP and the appropriate Federal official.

Maximum extent practicable means the planned capability to respond to a worst case discharge in adverse weather, as contained in a response plan that meets the criteria in this subpart or in a specific plan approved by the cognizant COTP.

Maximum most probable discharge means a discharge of the lesser of 1,200 barrels or 10 percent of the volume of a worst case discharge.

Nearshore area means the area extending seaward 12 miles from the boundary lines defined in 46 CFR part 7, except in the Gulf of Mexico. In the Gulf of Mexico, it means the area extending seaward 12 miles from the line of demarcation (COLREG lines) defined in §§ 80.740–80.850 of this chapter.

Non-persistent or Group I oil means a petroleum-based oil that, at the time of shipment, consists of hydrocarbon fractions—

(1) At least 50 percent of which by volume, distill at a temperature of 340 degrees C (645 degrees F); and

(2) At least 95 percent of which by volume, distill at a temperature of 370 degrees C (700 degrees F).

Ocean means the offshore area and nearshore area as defined in this subpart.

Offshore area means the area beyond 12 nautical miles measured from the boundary lines defined in 46 CFR part 7 extending seaward to 50 nautical miles, except in the Gulf of Mexico. In the

Gulf of Mexico, it is the area beyond 12 nautical miles of the line of demarcation (COLREG lines) defined in §§ 80.740–80.850 of this chapter extending seaward to 50 nautical miles.

Oil means oil of any kind or in any form, including, but not limited to, petroleum, fuel oil, sludge, oil refuse, oil mixed with wastes other than dredge spoil.

Oil spill removal organization (OSRO) means an entity that provides response resources.

On-Scene Coordinator (OSC) means the definition in the National Oil and Hazardous Substances Pollution Contingency Plan (40 CFR part 300).

Operating area means Rivers and Canals, Inland, Nearshore, Great Lakes, or Offshore geographic location(s) in which a facility is handling, storing, or transporting oil.

Operating environment means Rivers and Canals, Inland, Great Lakes, or Ocean. These terms are used to define the conditions in which response equipment is designed to function.

Operating in compliance with the plan means operating in compliance with the provisions of this subpart including, ensuring the availability of the response resources by contract or other approved means, and conducting the necessary training and drills.

Other non-petroleum oil means a non-petroleum oil of any kind that is not generally an animal fat or vegetable oil.

Persistent oil means a petroleum-based oil that does not meet the distillation criteria for a non-persistent oil. For the purposes of this subpart, persistent oils are further classified based on specific gravity as follows:

(1) Group II—specific gravity of less than .85.

(2) Group III—specific gravity equal to or greater than .85 and less than .95.

(3) Group IV—specific gravity equal to or greater than .95 and less than or equal to 1.0.

(4) Group V—specific gravity greater than 1.0.

Qualified individual and alternate qualified individual means a person located in the United States who meets the requirements of § 154.1026.

Response activities means the containment and removal of oil from the land, water, and shorelines, the temporary storage and disposal of recovered oil, or the taking of other actions as necessary to minimize or mitigate damage to the public health or welfare or the environment.

Response resources means the personnel, equipment, supplies, and other capability necessary to perform the response activities identified in a response plan.

Rivers and canals means a body of water confined within the inland area, including the Intracoastal Waterways and other waterways artificially created for navigation, that has a project depth of 12 feet or less.

Specific gravity means the ratio of the mass of a given volume of liquid at 15 °C (60 °F) to the mass of an equal volume of pure water at the same temperature.

Spill management team means the personnel identified to staff the organizational structure identified in a response plan to manage response plan implementation.

Substantial threat of a discharge means any incident or condition involving a facility that may create a risk of discharge of oil. Such incidents include, but are not limited to storage tank or piping failures, above ground or underground leaks, fires, explosions, flooding, spills contained within the facility, or other similar occurrences.

Tier means the combination of required response resources and the times within which the resources must arrive on scene.

[NOTE: Tiers are applied in three categories:

(1) Higher Volume Port Areas,

(2) Great Lakes, and

(3) All other operating environments, including rivers and canals, inland, nearshore, and offshore areas.

Appendix C, Table 4 of this part, provides specific guidance on calculating response resources. Sections 154.1045(f) and 154.1135, set forth the required times within which the response resources must arrive on-scene.]

Vegetable oil means a non-petroleum oil or fat derived from plant seeds, nuts, kernels or fruits, and not specifically identified elsewhere in this part.

Worst case discharge means in the case of an onshore facility and deepwater port, the largest foreseeable discharge in adverse weather conditions meeting the requirements of § 154.1029.

§154.1025 Operating restrictions and interim operating authorization.

(a) The owner or operator of an MTR facility who submitted a response plan prior to May 29, 1996, may elect to comply with any of the provisions of this final rule by revising the appropriate section of the previously submitted plan in accordance with §154.1065. An owner or operator of an MTR facility who elects to comply with all sections of this final rule must resubmit the plan in accordance with §154.1060 of this part.

(b) No facility subject to this subpart may handle, store, or transport oil unless it is operating in full compliance with a submitted response plan. No facility categorized under §154.1015(c) as a significant and substantial harm facility may handle, store, or transport oil unless the submitted response plan has been approved by the COTP. The owner or operator of each new facility to which this subpart applies must submit a response plan meeting the requirements listed in §154.1017 not less than 60 days prior to handling, storing, or transporting oil. Where applicable, the response plan shall be submitted along with the letter of intent required under §154.110.

(c) Notwithstanding the requirements of paragraph (b) of this section, a facility categorized under §154.1015(c) as a significant and substantial harm facility may continue to handle, store, or transport oil for 2 years after the date of submission of a response plan, pending approval of that plan. To continue to handle, store, or transport oil without a plan approved by the COTP, the facility owner or operator shall certify in writing to the COTP that the owner or operator has ensured, by contract or other approved means as described in §154.1028(a), the availability of the necessary private personnel and equipment to respond, to the maximum extend practicable to a worst case discharge or substantial threat of such a discharge from the facility. Provided that the COTP is satisfied with the certification of response resources provided by the owner or operator of the facility, the COTP will provide written authorization for the facility to handle, store, or transport oil while the submitted response plan is being reviewed. Pending approval of the submitted response plan, deficiencies noted by the COTP must be corrected in accordance with §154.1070.

(d) A facility may not continue to handle, store, or transport oil if—

(1) The COTP determines that the response resources identified in the facility certification statement or reference response plan do not substantially meet the requirements of this subpart;

(2) The contracts or agreements cited in the facility's certification statement or referenced response plans are no longer valid;

(3) The facility is not operating in compliance with the submitted plan;

(4) The response plan has not been resubmitted or approved within the last 5 years; or

(5) The period of the authorization under paragraph (c) of this section has expired.

§154.1026 Qualified individual and alternate qualified individual.

(a) The response plan must identify a qualified individual and at least one alternate who meet the requirements of this section. The qualified individual or alternate must be available on a 24-hour basis and be able to arrive at the facility in a reasonable time.

(b) The qualified individual and alternate must:

(1) Be located in the United States;

(2) Speak fluent English;

(3) Be familiar with the implementation of the facility response plan; and

(4) Be trained in the responsibilities of the qualified individual under the response plan.

(c) The owner or operator shall provide each qualified individual and alternate qualified individual identified in the plan with a document designating them as a qualified individual and specifying their full authority to:

(1) Activate and engage in contracting with oil spill removal organization(s);

(2) Act as a liaison with the predesignated Federal On-Scene Coordinator (OSC); and

(3) Obligate funds required to carry out response activities.

(d) The owner or operator of a facility may designate an organization to

fulfill the role of the qualified individual and the alternate qualified individual. The organization must then identify a qualified individual and at least one alternate qualified individual who meet the requirements of this section. The facility owner or operator is required to list in the response plan the organization, the person identified as the qualified individual, and the person or person(s) identified as the alternate qualified individual(s).

(e) The qualified individual is not responsible for—

(1) The adequacy of response plans prepared by the owner or operator; or

(2) Contracting or obligating funds for response resources beyond the authority contained in their designation from the owner or operator of the facility.

(f) The liability of a qualified individual is considered to be in accordance with the provisions of 33 USC 1321(c)(4).

§ 154.1028 Methods of ensuring the availability of response resources by contract or other approved means.

(a) When required in this subpart, the availability of response resources must be ensured by the following methods:

(1) A written contractual agreement with an oil spill removal organization. The agreement must identify and ensure the availability of specified personnel and equipment required under this subpart within stipulated response times in the specified geographic areas;

(2) Certification by the facility owner or operator that specified personnel and equipment required under this subpart are owned, operated, or under the direct control of the facility owner or operator, and are available within stipulated response times in the specified geographic areas;

(3) Active membership in a local or regional oil spill removal organization that has identified specified personnel and equipment required under this subpart that are available to respond to a discharge within stipulated response times in the specified geographic areas;

(4) A document which—

(i) Identifies the personnel, equipment, and services capable of being provided by the oil spill removal organization within stipulated response times in the specified geographic areas;

(ii) Sets out the parties' acknowledgment that the oil spill removal organization intends to commit the resources in the event of a response;

(iii) Permits the Coast Guard to verify the availability of the identified response resources through tests, inspections, and drills; and

(iv) Is referenced in the response plan; or

(5) The identification of an oil spill removal organization with specified equipment and personnel available within stipulated response times in specified geographic areas. The organization must provide written consent to being identified in the plan.

(b) The contracts and documents required in paragraph (a) of this section must be retained at the facility and must be produced for review upon request by the COTP.

§ 154.1029 Worst case discharge.

(a) The response plan must use the appropriate criteria in this section to develop the worst case discharge.

(b) For the MTR segment of a facility, not less than—

(1) Where applicable, the loss of the entire capacity of all in-line and break out tank(s) needed for the continuous operation of the pipelines used for the purposes of handling or transporting oil, in bulk, to or from a vessel regardless of the presence of secondary containment; plus

(2) The discharge from all piping carrying oil between the marine transfer manifold and the non-transportation-related portion of the facility. The discharge from each pipe is calculated as follows: The maximum time to discover the release from the pipe in hours, plus the maximum time to shut down flow from the pipe in hours (based on historic discharge data or the best estimate in the absence of historic discharge data for the facility) multiplied by the maximum flow rate expressed in barrels per hour (based on the maximum relief valve setting or maximum system pressure when relief valves are not provided) plus the total line drainage volume expressed in barrels for the pipe between the marine

manifold and the non-transportation-related portion of the facility; and

(c) For a mobile facility it means the loss of the entire contents of the container in which the oil is stored or transported.

§154.1030 General response plan contents.

(a) The plan must be written in English.

(b) A response plan must be divided into the sections listed in this paragraph and formatted in the order specified herein unless noted otherwise. It must also have some easily found marker identifying each section listed below. The following are the sections and subsections of a facility response plan:

(1) Introduction and plan contents.

(2) Emergency response action plan:

(i) Notification procedures.

(ii) Facility's spill mitigation procedures.

(iii) Facility's response activities.

(iv) Fish and wildlife and sensitive environments.

(v) Disposal plan.

(3) Training and Exercises:

(i) Training procedures.

(ii) Exercise procedures.

(4) Plan review and update procedures.

(5) Appendices.

(i) Facility-specific information.

(ii) List of contacts.

(iii) Equipment lists and records.

(iv) Communications plan.

(v) Site-specific safety and health plan.

(vi) List of acronyms and definitions.

(vii) A geographic-specific appendix for each zone in which a mobile facility operates.

(c) The required contents for each section and subsection of the plan are contained in §§154.1035, 154.1040, and 154.1041, as appropriate.

(d) The sections and subsections of response plans submitted to the COTP must contain at a minimum all the information required in §§154.1035, 154.1040, and 154.1041, as appropriate. It may contain other appropriate sections, subsections, or information that are required by other Federal, State, and local agencies.

(e) For initial and subsequent submission, a plan that does not follow the format specified in paragraph (b) of this section must be supplemented with a detailed cross-reference section to identify the location of the applicable sections required by this subpart.

(f) The information contained in a response plan must be consistent with the National Oil and Hazardous Substances Pollution Contingency Plan (NCP) (40 CFR part 300) and the Area Contingency Plan(s) (ACP) covering the area in which the facility operates. Facility owners or operators shall ensure that their response plans are in accordance with the ACP in effect 6 months prior to initial plan submission or the annual plan review required under §154.1065(a). Facility owners or operators are not required to, but may at their option, conform to an ACP which is less than 6 months old at the time of plan submission.

§154.1035 Specific requirements for facilities that could reasonably be expected to cause significant and substantial harm to the environment.

(a) *Introduction and plan content.* This section of the plan must include facility and plan information as follows:

(1) The facility's name, street address, city, county, state, ZIP code, facility telephone number, and telefacsimile number, if so equipped. Include mailing address if different from street address.

(2) The facility's location described in a manner that could aid both a reviewer and a responder in locating the specific facility covered by the plan, such as, river mile or location from a known landmark that would appear on a map or chart.

(3) The name, address, and procedures for contacting the facility's owner or operator on a 24-hour basis.

(4) A table of contents.

(5) During the period that the submitted plan does not have to conform to the format contained in this subpart, a cross index, if appropriate.

(6) A record of change(s) to record information on plan updates.

(b) *Emergency Response Action Plan.* This section of the plan must be organized in the subsections described in this paragraph:

(1) *Notification procedures.* (i) This subsection must contain a prioritized list identifying the person(s), including name, telephone number, and their role in the plan, to be notified of a discharge or substantial threat of a discharge of oil. The telephone number need not be provided if it is listed separately in the list of contacts required in the plan. This Notification Procedures listing must include—

(A) Facility response personnel, the spill management team, oil spill removal organizations, and the qualified individual(s) and the designated alternate(s); and

(B) Federal, State, or local agencies, as required.

(ii) This subsection must include a form, such as that depicted in Figure 1, which contains information to be provided in the initial and follow-up notifications to Federal, State, and local agencies. The form shall include notification of the National Response Center as required in part 153 of this chapter. Copies of the form also must be placed at the location(s) from which notification may be made. The initial notification form must include space for the information contained in Figure 1. The form must contain a prominent statement that initial notification must not be delayed pending collection of all information.

FIGURE 1.—INFORMATION ON DISCHARGE *

[Involved Parties]

(A) Reporting party	(B) Suspected responsible party
Name	Name
Phones ( ) –	Phones ( ) –
Company	Company
Position	Organization Type:
Address	Private citizen
Address	Private enterprise
	Public utility
	Local government
	State government
	Federal government
City	City
State	State
Zip	Zip

* It is not necessary to wait for all information before calling NRC. National Response Center—1–800–424–8802.

Were materials Discharged (Y/N)?
Calling for Responsible Party (Y/N)

Incident Description

Source and/or Cause of Incident

Date - - Time:
Cause

Incident Address/Location Nearest City
Distance from City
Storage Tank Container Type—Above ground (Y/N) Below ground (Y/N) Unknown

Facility Capacity

Tank Capacity
Latitude Degrees
Longitude Degrees
Mile Post or River Mile

Materials

Discharge Unit of Quantity Measure Discharged Material Quantity in Water

Response Action

Actions Taken to Correct or Mitigate Incident

Impact

Number of Injuries Number of Fatalities
Were there Evacuations (Y/N/U)? Number Evacuated
Was there any Damage (Y/N/U)? Damage in Dollars

Additional Information

Any information about the Incident not recorded elsewhere in the report

Caller Notifications

USCG EPA State Other

(2) *Facility's spill mitigation procedures.* (i) This subsection must describe the volume(s) and oil groups that would be involved in the—

(A) Average most probable discharge from the MTR facility;

(B) Maximum most probable discharge from the MTR facility;

(C) Worst case discharge from the MTR facility; and

(D) Where applicable, the worst case discharge from the non-transportation-related facility. This must be the same volume provided in the response plan for the non-transportation-related facility.

(ii) This subsection must contain prioritized procedures for facility personnel to mitigate or prevent any discharge or substantial threat of a discharge of oil resulting from operational activities associated with internal or external facility transfers including specific procedures to shut down affected operations. Facility personnel responsible for performing specified procedures to mitigate or prevent any discharge or potential discharge shall be identified by job title. A copy of these procedures shall be maintained at the facility operations center. These procedures must address actions to be taken by facility personnel in the event of a discharge, potential discharge, or emergency involving the following equipment and scenarios:

(A) Failure of manifold, mechanical loading arm, other transfer equipment, or hoses, as appropriate;

(B) Tank overfill;

(C) Tank failure;

(D) Piping rupture;

(E) Piping leak, both under pressure and not under pressure, if applicable;

(F) Explosion or fire; and

(G) Equipment failure (e.g. pumping system failure, relief valve failure, or other general equipment relevant to operational activities associated with internal or external facility transfers.)

(iii) This subsection must contain a listing of equipment and the responsibilities of facility personnel to mitigate an average most probable discharge.

(3) *Facility's response activities.* (i) This subsection must contain a description of the facility personnel's responsibilities to initiate a response and supervise response resources pending the arrival of the qualified individual.

(ii) This subsection must contain a description of the responsibilities and authority of the qualified individual and alternate as required in § 154.1026.

(iii) This subsection must describe the organizational structure that will be used to manage the response actions. This structure must include the following functional areas.

(A) Command and control;

(B) Public information;

(C) Safety;

(D) Liaison with government agencies;

(E) Spill Operations;

(F) Planning;

(G) Logistics support; and

(H) Finance.

(iv) This subsection must identify the oil spill removal organizations and the spill management team to:

(A) Be capable of providing the following response resources:

(*1*) Equipment and supplies to meet the requirements of §§ 154.1045, 154.1047 or subparts H or I of this part, as appropriate; and

(*2*) Trained personnel necessary to continue operation of the equipment and staff of the oil spill removal organization and spill management team for the first 7 days of the response.

(B) This section must include job descriptions for each spill management team member within the organizational structure described in paragraph (b)(3)(iii) of this section. These job descriptions should include the responsibilities and duties of each spill management team member in a response action.

(v) For mobile facilities that operate in more than one COTP zone, the plan must identify the oil spill removal organization and the spill management team in the applicable geographic-specific appendix. The oil spill removal organization(s) and the spill management team discussed in paragraph (b)(3)(iv)(A) of this section must be included for each COTP zone in which the facility will handle, store, or transport oil in bulk.

(4) *Fish and wildlife and sensitive environments.* (i) This section of the plan must identify areas of economic importance and environmental sensitivity, as identified in the ACP, which are potentially impacted by a worst case discharge. ACPs are required under section 311(j)(4) of the FWPCA to identify fish and wildlife and sensitive environments. The applicable ACP shall be used to designate fish and wildlife and sensitive environments in the plan. Changes to the ACP regarding fish and wildlife and sensitive environments shall be included in the annual update of the response plan, when available.

(ii) For a worst case discharge from the facility, this section of the plan must—

(A) List all fish and wildlife and sensitive environments identified in the ACP which are potentially impacted by a discharge of persistent oils, non-persistent oils, or non-petroleum oils.

(B) Describe all the response actions that the facility anticipates taking to protest these fish and wildlife and sensitive environments.

(C) Contain a map or chart showing the location of those fish and wildlife and sensitive environments which are potentially impacted. The map or chart shall also depict each response action that the facility anticipates taking to protect these areas. A legend of activities must be included on the map page.

(iii) For a worst case discharge, this section must identify appropriate equipment and required personnel, available by contract or other approved means as described in § 154.1028, to protect fish and wildlife and sensitive environments which fall within the distances calculated using the methods outlined in this paragraph as follows:

(A) Identify the appropriate equipment and required personnel to protect all fish and wildlife and sensitive environments in the ACP for the distances, as calculated in paragraph (b)(4)(iii)(B) of this section, that the persistent oils, non-persistent oils, or non-petroleum oils are likely to travel in the noted geographic area(s) and number of days listed in Table 2 of appendix C of this part;

(B) Calculate the distances required by paragraph (b)(4)(iii)(A) of this section by selecting one of the methods described in this paragraph;

(*1*) Distances may be calculated as follows:

(*i*) For persistent oils and non-petroleum oils discharged into non-tidal waters, the distance from the facility reached in 48 hours at maximum current.

(*ii*) For persistent and non-petroleum oils discharged into tidal waters, 15 miles from the facility down current during ebb tide and to the point of maximum tidal influence or 15 miles, whichever is less, during flood tide.

(*iii*) For non-persistent oils discharged into non-tidal waters, the distance from the facility reached in 24 hours at maximum current.

(*iv*) For non-persistent oils discharged into tidal waters, 5 miles from the facility down current during ebb tide and to the point of maximum tidal influence or 5 miles, whichever is less, during flood tide.

(*2*) A spill trajectory or model may be substituted for the distances calculated under paragraph (b)(4)(iii)(B)(*l*) *of this section*. The spill trajectory or model must be acceptable to the COTP.

(*3*) The procedures contained in the Environmental Protection's Agency's regulations on oil pollution prevention for non-transportation-related onshore facilities at 40 CFR part 112, appendix C, Attachment C–III may be substituted for the distances listed in non-tidal and tidal waters; and

(C) Based on historical information or a spill trajectory or model, the COTP may require the additional fish and wildlife and sensitive environments also be protected.

(5) *Disposal Plan*. This subsection must describe any actions to be taken or procedures to be used to ensure that all recovered oil and oil contaminated debris produced as a result of any discharge are disposed according to Federal, state, or local requirements.

(c) *Training and exercises.* This section must be divided into the following two subsections:

(1) *Training procedures.* This subsection must describe the training procedures and programs of the facility owner or operator to meet the requirements in § 154.1050.

(2) *Exercise procedures.* This subsection must describe the exercise program to be carried out by the facility owner or operator to meet the requirements in § 154.1055.

(d) *Plan review and update procedures.* This section must address the procedures to be followed by the facility owner or operator to meet the requirements of § 154.1065 and the procedures to be followed for any post-discharge review of the plan to evaluate and validate its effectiveness.

(e) *Appendices.* This section of the response plan must include the appendices described in this paragraph.

(1) *Facility-specific information*. This appendix must contain a description of the facility's principal characteristics.

(i) There must be a physical description of the facility including a plan of the facility showing the mooring areas, transfer locations, control stations, locations of safety equipment, and the location and capacities of all piping and storage tanks.

(ii) The appendix must identify the sizes, types, and number of vessels that the facility can transfer oil to or from simultaneously.

(iii) The appendix must identify the first valve(s) on facility piping separating the transportation-related portion of the facility from the non-transportation-related portion of the facility, if any. For piping leading to a manifold located on a dock serving tank vessels, this valve is the first valve inside the secondary containment required by 40 CFR part 112.

(iv) The appendix must contain information on the oil(s) and hazardous material handled, stored, or transported at the facility in bulk. A material safety data sheet meeting the requirements of 29 CFR 1910.1200, 33 CFR 154.310(a)(5) or an equivalent will meet this requirement. This information can be maintained separately providing it is readily available and the appendix identifies its location. This information must include—

(A) The generic or chemical name;

(B) A description of the appearance and odor;

(C) The physical and chemical characteristics;

(D) The hazards involved in handling the oil(s) and hazardous materials. This shall include hazards likely to be encountered if the oil(s) and hazardous materials come in contact as a result of a discharge; and

(E) A list of firefighting procedures and extinguishing agents effective with fires involving the oil(s) and hazardous materials.

(v) The appendix may contain any other information which the facility owner or operator determines to be pertinent to an oil spill response.

(2) *List of contacts.* This appendix must include information on 24-hour contact of key individuals and organizations. If more appropriate, this information may be specified in a geographic-specific appendix. The list must include—

(i) The primary and alternate qualified individual(s) for the facility;

(ii) The contact(s) identified under paragraph (b)(3)(iv) of this section for activation of the response resources; and

(iii) Appropriate Federal, State, and local officials.

(3) *Equipment list and records.* This appendix must include the information specified in this paragraph.

(i) The appendix must contain a list of equipment and facility personnel required to respond to an average most probable discharge, as defined in § 154.1020. The appendix must also list the location of the equipment.

(ii) The appendix must contain a detailed listing of all the major equipment identified in the plan as belonging to an oil spill removal organization(s) that is available, by contract or other approved means as described in § 154.1028(a), to respond to a maximum most probable or worst case discharge, as defined in § 154.1020. The detailed listing of all major equipment may be located in a separate document referenced by the plan. Either the appendix or the separate document referenced in the plan must provide the location of the major response equipment.

(iii) It is not necessary to list response equipment from oil spill removal organization(s) when the organization has been classified by the Coast Guard and their capacity has been determined to equal or exceed the response capability needed by the facility. For oil spill removal organization(s) classification by the Coast Guard, the classified must be noted in this section of the plan. When it is necessary for the appendix to contain a listing of response equipment, it shall include all of the following items that are identified in the response plan: Skimmers; booms; dispersant application, in-situ burning, bioremediation equipment and supplies, and other equipment used to apply other chemical agents on the NCP Product Schedule (if applicable); communications, firefighting, and beach cleaning equipment; boats and motors; disposal and storage equipment; and heavy equipment. The list must include for each piece of equipment—

(A) The type, make, model, and year of manufacture listed on the nameplate of the equipment;

(B) For oil recovery devices, the effective daily recovery rate, as determined using section 6 of Appendix C of this part;

(C) For containment boom, the overall boom height (draft and freeboard) and type of end connectors;

(D) The spill scenario in which the equipment will be used for or which it is contracted;

(E) The total daily capacity for storage and disposal of recovered oil;

(F) For communication equipment, the type and amount of equipment intended for use during response activities. Where applicable, the primary and secondary radio frequencies must be specified.

(G) Location of the equipment; and

(H) The date of the last inspection by the oil spill removal organization(s).

(4) *Communications plan.* This appendix must describe the primary and alternate method of communication during discharges, including communications at the facility and at remote locations within the areas covered by the response plan. The appendix may refer to additional communications packages provided by the oil spill removal organization. This may reference another existing plan or document.

(5) *Site-specific safety and health plan.* This appendix must describe the safety and health plan to be implemented for any response location(s). It must provide as much detailed information as is practicable in advance of an actual discharge. This appendix may reference another existing plan requiring under 29 CFR 1910.120.

(6) *List of acronyms and definitions.* This appendix must list all acronyms used in the response plan including any terms or acronyms used by Federal, State, or local governments and any operational terms commonly used at the facility. This appendix must include all definitions that are critical to understanding the response plan.

§ 154.1040 Specific requirements for facilities that could reasonably be expected to cause substantial harm to the environment.

(a) The owner or operator of a facility that, under § 154.1015, could reasonably be expected to cause substantial harm to the environment, shall submit

a response plan that meets the requirements of §154.1035, except as modified by this section.

(b) The facility's response activities section of the response plan need not list the facility or corporate organizational structure that will be used to manage the response, as required by §154.1035(b)(3)(iii).

(c) The owner or operator of a facility must ensure the availability of response resources required to be identified in §154.1035(b)(3)(iv) by contract or other approved means described in §154.1028.

(d) A facility owner or operator must have at least 200 feet of containment boom and the means of deploying and anchoring the boom available at the spill site within 1 hour of the detection of a spill to respond to the average most probable discharge in lieu of the quantity of containment boom specified in §154.1045(c)(1). Based on site-specific or facility-specific information, the COTP may specify that additional quantities of containment boom are available within one hour. In addition, there must be adequate sorbent material for initial response to an average most probable discharge. If the facility is a fixed facility, the containment boom and sorbent material must be located at the facility. If the facility is a mobile facility, the containment boom and sorbent must be available locally and be at the site of the discharge within 1 hour of its discovery.

§154.1041 Specific response information to be maintained on mobile MTR facilities.

(a) Each mobile MTR facility must carry the following information as contained in the response plan when performing transfer operations:

(1) A description of response activities for a discharge which may occur during transfer operations. This may be a narrative description or a list of procedures to be followed in the event of a discharge.

(2) Identity of response resources to respond to a discharge from the mobile MTR facility.

(3) List of the appropriate persons and agencies (including the telephone numbers) to be contacted in regard to a discharge and its handling, including the National Response Center.

(b) The owner or operator of the mobile facility must also retain the information in this paragraph at the principal place of business.

§154.1045 Response plan development and evaluation criteria for facilities that handle, store, or transport Group I through Group IV petroleum oils.

(a) The owner or operator of a facility that handles, stores, or transports Group I through Group IV petroleum oils shall use the criteria in this section to evaluate response resources identified in the response plan for the specified operating environment.

(1) The criteria in Table 1 of appendix C of this part are to be used solely for identification of appropriate equipment in a response plan. These criteria reflect conditions used for planning purposes to select mechanical response equipment and are not conditions that would limit response actions or affect normal facility operations.

(2) The response resources must be evaluated considering limitations for the COTP zones in which the facility operates, including but not limited to—

(i) Ice conditions;

(ii) Debris;

(iii) Temperature ranges;

(iv) Weather-related visibility; and

(v) Other appropriate environmental conditions as determined by the COTP.

(3) The COTP may reclassify a specific body of water or location within the COTP zone. Any reclassifications will be identified by the COTP in the applicable ACP. Reclassifications may be to—

(i) A more stringent operating environment if the prevailing wave conditions exceed the significant wave height criteria during more than 35 percent of the year; or

(ii) A less stringent operating environment if the prevailing wave conditions do not exceed the significant wave height criteria for the less stringent operating environment during more than 35 percent of the year.

(b) Response equipment must—

(1) Meet or exceed the operating criteria listed in Table 1 of appendix C of this part;

(2) Function in the applicable operating environment; and

(3) Be appropriate for the petroleum oil carried.

(c) The response plan for a facility that handles, stores, or transports Group I through Group IV petroleum oils must identify response resources that are available, by contract or other approved means as described in § 154.1028(a)(1)(4), to respond to the facility's average most probable discharge. The response resources must include, at a minimum—

(1) 1,000 feet of containment boom or two times the length of the largest vessel that regularly conducts petroleum oil transfers to or from the facility, whichever is greater, and the means of deploying and anchoring the boom available at the spill site within 1 hour of the detection of a spill; and

(2) Oil recovery devices and recovered oil storage capacity capable of being at the spill site within 2 hours of the discovery of a petroleum oil discharge from a facility.

(d) The response plan for a facility that handles, stores, or transports Group I through Group IV petroleum oils must identify response resources that are available, by contract or other approved means as described in § 154.1028(a)(1)(4), to respond to a discharge up to the facility's maximum most probable discharge volume.

(1) The response resources must include sufficient containment boom, oil recovery devices, and storage capacity for any recovery of up to the maximum most probable discharge planning volume, as contained in appendix C.

(2) The response resources must be appropriate for each group of petroleum oil identified in § 154.1020 that is handled, stored, or transported by the facility.

(3) These response resources must be positioned such that they can arrive at the scene of a discharge within the following specified times:

(i) The equipment identified in paragraphs (c)(1) and (c)(2) of this section or in § 154.1040(d) must arrive within the times specified in those paragraphs or that section, as appropriate.

(ii) In higher volume port areas and the Great Lakes, response resources must be capable of arriving on scene within 6 hours of the discovery of an petroleum oil discharge from a facility.

(iii) In all other locations, response resources must be capable of arriving on scene within 12 hours of the discovery of a petroleum oil discharge from a facility.

(4) The COTP may determine that mobilizing response resources to an area beyond the response times indicated in this paragraph invalidates the response plan. In this event, the COTP may impose additional operational restrictions (e.g., limitations on the number of transfers at a facility), or, at the COTP's discretion, the facility may operate with temporarily modified response plan development and evaluation criteria (e.g., modified response times, alternate response resources, etc.).

(e) The response plan for a facility that handles, stores, or transports Group I through Group IV petroleum oils must identify the response resources that are available, by contract or other approved means as described in § 154.1028(a)(1)(4), to respond to the worst case discharge volume of petroleum oil to the maximum extent practicable.

(1) The location of these response resources must be suitable to meet the response times identified in paragraph (f) of this section for the applicable geographic area(s) of operation and response tier.

(2) The response resources must be appropriate for—

(i) The volume of the facility's worst case discharge;

(ii) Group(s) of petroleum oil as identified in § 154.1020 that are handled, stored, or transported by the facility; and

(iii) The geographic area(s) in which the facility operates.

(3) The response resources must include sufficient boom, oil recovery devices, and storage capacity to recover the worst case discharge planning volumes.

(4) The guidelines in appendix C of this part must be used for calculating the quantity of response resources required to respond at each tier to the worst case discharge to the maximum extent practicable.

(5) When determining response resources necessary to meet the requirements of this section, a portion of those resources must be capable of use in close-to-shore response activities in shallow water. The following percentages of the response equipment identified for the applicable geographic area must be capable of operating in waters of 6 feet or less depth.

(i) Offshore—10 percent.

(ii) Nearshore/inland/Great Lakes/rivers and canals—20 percent.

(6) The COTP may determine that mobilizing response resources to an area beyond the response times indicated in this paragraph invalidates the response plan. In this event, the COTP may impose additional operational restrictions (e.g., limitations on the number of transfers at a facility), or, at the COTP's discretion, the facility may be permitted to operate with temporarily modified response plan development and evaluation criteria (e.g., modified response times, alternate response resources, etc.).

(f) Response equipment identified in a response plan for a facility that handles, stores, or transports Group I through Group IV petroleum oils must be capable of arriving on scene within the times specified in this paragraph for the applicable response tier in a higher volume port area, Great Lakes, and in other areas. Response times for these tiers from the time of discovery of a discharge are—

	Tier 1 (hrs.)	Tier 2 (hrs.)	Tier 3 (hrs.)
Higher volume port area (except for a TAPAA facility located in Prince William Sound, see § 154.1135)	6	30	54
Great Lakes	12	36	60
All other river and canal, inland, nearshore, and offshore areas	12	36	60

(g) For the purposes of arranging for response resources for a facility that handles, stores, or transports Group I through Group IV petroleum oils, by contract or other approved means as described in § 154.1028(a)(1)–(4), response equipment identified for Tier 1 plan credit must be capable of being mobilized and en route to the scene of a discharge within 2 hours of notification. The notification procedures identified in the plan must provide for notification and authorization of mobilization of identified Tier 1 response resources—

(1) Either directly or through the qualified individual; and

(2) Within 30 minutes of a discovery of a discharge or substantial threat of discharge.

(h) Response resources identified for Tier 2 and Tier 3 plan credit must be capable of arriving on scene within the time specified for the applicable tier.

(i) The response plan for a facility that is located in any environment with year-round preapproval for use of dispersants and that handles, stores, or transports Group II or III persistent petroleum oils may request a credit for up to 25 percent of the on-water recovery capability set forth by this part. To receive this credit, the facility owner or operator must identify in the plan and ensure, by contract or other approved means as described in § 154.1028(a)(1)–(4), the availability of specified resources to apply the dispersants and to monitor their effectiveness. The extent of the credit will be based on the volumes of the dispersant available to sustain operations at the manufacturers' recommend dosage rates. Resources identified for plan credit should be capable of being on scene within 12 hours of a discovery of a discharge. Identification of these resources does not imply that they will be authorized for use. Actual authorization for use during a spill response will be governed by the provisions of the NCP and the applicable ACP.

(j) A response plan for a facility that handles, stores, or transports Group I through Group IV petroleum oils must identify response resources with firefighting capability. The owner or operator of a facility that does not have adequate firefighting resources located at the facility or that can not rely on sufficient local firefighting resources must identify and ensure, by contract or other approved means as described in § 154.1028(a)(1)–(4), the availability of adequate firefighting resources. The response plan must also identify an individual located at the facility to work with the fire department for petroleum oil fires. This individual shall also verify that sufficient well-trained firefighting resources are available within

a reasonable time to respond to a worst case discharge. The individual may be the qualified individual as defined in § 154.1020 and identified in the response plan or another appropriate individual located at the facility.

(k) The response plan for a facility that handles, stores, or transports Groups I through IV petroleum oils must identify equipment and required personnel available, by contract or other approved means as described in § 154.1028(a) (1)–(4), to protect fish and wildlife and sensitive environments.

(1) Except as set out in paragraph (k)(2) of this section, the identified response resources must include the quantities of boom sufficient to protect fish and wildlife and sensitive environments as required by § 154.1035(b)(4).

(2) The resources and response methods identified in a facility response plan must be consistent with the required resources and response methods to be used in fish and wildlife and sensitive environments, contained in the appropriate ACP. Facility owners or operators shall ensure that their response plans are in accordance with the ACP in effect 6 months prior to initial plan submission or the annual plan review required under § 154.1065(a). Facility owners or operators are not required to, but may at their option, conform to an ACP which is less than 6 months old at the time of plan submission.

(l) The response plan for a facility that handles, stores, or transports Groups I through IV petroleum oils must identify an oil spill removal organization(s) with response resources that are available, by contract or other approved means as described in § 154.1028(a) (1)–(4), to effect a shoreline cleanup operation commensurate with the quantity of emulsified petroleum oil to be planned for in shoreline cleanup operations.

(1) Except as required in paragraph (l)(2) of this section, the shoreline cleanup response resources required must be determined as described in appendix C of this part.

(2) The resources and response methods identified in a facility response plan must be consistent with the required shoreline cleanup resources and methods contained in the appropriate ACP. Facility owners or operators shall ensure that their response plans are in accordance with the ACP in effect 6 months prior to initial plan submission or the annual plan review required under § 154.1065(a). Facility owners or operators are not required to, but may at their option, conform to an ACP which is less than 6 months old at the time of plan submission.

(m) Appendix C of this part describes the procedures to determine the maximum extent practicable quantity of response resources that must be identified and available, by contract or other approved means as described in § 154.1028(a) (1)–(4), for the maximum most probable discharge volume, and for each worst case discharge response tier.

(1) Included in appendix C of this part is a cap that recognizes the practical and technical limits of response capabilities that an individual facility owner or operator can be expected to contract for in advance.

(2) Table 5 in appendix C of this part lists the caps that apply in February 18, 1993, and February 18, 1998. Depending on the quantity and type of petroleum oil handled by the facility and the facility's geographic area of operations, the resource capability caps in this table may be reached. The owner or operator of a facility whose estimated recovery capacity exceeds the applicable contracting caps in Table 5 shall identify sources of additional equipment equal to twice the cap listed in Tiers 1, 2, and 3 or the amount necessary to reach the calculated planning volume, whichever is lower. The identified resources must be capable of arriving on scene not later than the Tier 1, 2, and 3 response times in this section. No contract is required. While general listings of available response equipment may be used to identify additional sources, a response plan must identify the specific sources, locations, and quantities of equipment that a facility owner or operator has considered in his or her planning. When listing Coast Guard classified oil spill removal organization(s) which have sufficient removal capacity to recover the volume above the response capability cap for the specific facility, as specified in Table 5 in appendix C of this part, it is

not necessary to list specific quantities of equipment.

(n) The Coast Guard will initiate a review of cap increases and other requirements contained within this subpart that are scheduled to be phased in over time. Any changes in the requirements of this section will occur through a public notice and comment process.

(1) During this review, the Coast Guard will determine if the scheduled increase for February 1998 remains practicable, and will also establish a specific cap for 2003. The review will include but is not limited to—

(i) Increase in skimming efficiencies and design technology;

(ii) Oil tracking technology;

(iii) High rate response techniques;

(iv) Other applicable response technologies; and

(v) Increases in the availability of private response resources.

(2) All scheduled future requirements will take effect unless the Coast Guard determines that they are not practicable. Scheduled changes will be effective in February 1998 and 2003 unless the review of the additional requirements has not been completed by the Coast Guard. If this occurs, the additional requirements will not be effective until 90 days after publication of a FEDERAL REGISTER notice with the results of the review.

§154.1047 Response plan development and evaluation criteria for facilities that handle, store, or transport Group V petroleum oils.

(a) An owner or operator of a facility that handles, stores, or transports Group V petroleum oils must provide information in his or her response plan that identifies—

(1) Procedures and strategies for responding to a worst case discharge of Group V petroleum oils to the maximum extent practicable; and

(2) Sources of the equipment and supplies necessary to locate, recover, and mitigate such a discharge.

(b) An owner or operator of a facility that handles, stores, or transports Group V petroleum oil must ensure that any equipment identified in a response plan is capable of operating in the conditions expected in the geographic area(s) in which the facility operates using the criteria in Table 1 of appendix C of this part. When evaluating the operability of equipment, the facility owner or operator must consider limitations that are identified in the ACPs for the COTP zones in which the facility operates, including—

(1) Ice conditions;

(2) Debris;

(3) Temperature ranges; and

(4) Weather-related visibility.

(c) The owner or operator of a facility that handles, stores, or transports Group V petroleum oil must identify the response resources that are available by contract or other approved means as described in §154.1028. The equipment identified in a response plan must include—

(1) Sonar, sampling equipment, or other methods for locating the petroleum oil on the bottom or suspended in the water column;

(2) Containment boom, sorbent boom, silt curtains, or other methods for containing the petroleum oil that may remain floating on the surface or to reduce spreading on the bottom;

(3) Dredges, pumps, or other equipment necessary to recover petroleum oil from the bottom and shoreline;

(4) Equipment necessary to assess the impact of such discharges; and

(5) Other appropriate equipment necessary to respond to a discharge involving the type of petroleum oil handled, stored, or transported.

(d) Response resources identified in a response plan for a facility that handles, stores, or transports Group V petroleum oils under paragraph (c) of this section must be capable of being at the spill site within 24 hours of discovery of a discharge.

(e) A response plan for a facility that handles, stores, or transports Group V petroleum oils must identify response resources with firefighting capability. The owner or operator of a facility that does not have adequate firefighting resources located at the facility or that can not rely on sufficient local firefighting resources must identity and ensure, by contract or other approved means as described in §154.1028, the availability of adequate firefighting resources. The response plan must also identify an individual located at the facility to work with the fire department

for petroleum oil fires. This individual shall also verify that sufficient well-trained firefighting resources are available within a reasonable response time to a worst case scenario. The individual may be the qualified individual as defined in § 154.1020 and identified in the response plan or another appropriate individual located at the facility.

§ 154.1050 Training.

(a) A response plan submitted to meet the requirements of §§ 154.1035 or 154.1040, as appropriate, must identify the training to be provided to each individual with responsibilities under the plan. A facility owner or operator must identify the method to be used for training any volunteers or casual laborers used during a response to comply with the requirements of 29 CFR 1910.120.

(b) A facility owner or operator shall ensure the maintenance of records sufficient to document training of facility personnel; and shall make them available for inspection upon request by the U.S. Coast Guard. Records for facility personnel must be maintained at the facility for 3 years.

(c) Where applicable, a facility owner or operator shall ensure that an oil spill removal organization identified in a response plan to meet the requirements of this subpart maintains records sufficient to document training for the organization's personnel and shall make them available for inspection upon request by the facility's management personnel, the qualified individual, and U.S. Coast Guard. Records must be maintained for 3 years following completion of training.

(d) The facility owner or operator remains responsible for ensuring that all private response personnel are trained to meet the Occupational Safety and Health Administration (OSHA) standards for emergency response operations in 29 CFR 1910.120.

§ 154.1055 Exercises.

(a) A response plan submitted by an owner or operator of an MTR facility must include an exercise program containing both announced and unannounced exercises. The following are the minimum exercise requirements for facilities covered by this subpart:

(1) Qualified individual notification exercises (quarterly).

(2) Spill management team tabletop exercises (annually). In a 3-year period, at least one of these exercises must include a worst case discharge scenario.

(3) Equipment deployment exercises:

(i) Semiannually for facility owned and operated equipment.

(ii) Annually for oil spill removal organization equipment.

(4) Emergency procedures exercises (optional).

(5) Annually, at least one of the exercises listed in § 154.1055(a)(2) through (4) must be unannounced. Unannounced means the personnel participating in the exercise must not be advised in advance, of the exact date, time and scenario of the exercise.

(6) The facility owner or operator shall design the exercise program so that all components of the response plan are exercised at least once every 3 years. All of the components do not have to be exercised at one time; they may be exercised over the 3-year period through the required exercises or through an Area exercise.

(b) A facility owner or operator shall participate in unannounced exercises, as directed by the COTP. The objectives of the unannounced exercises will be to test notifications and equipment deployment for response to the average most probable discharge. After participating in an unannounced exercise directed by a COTP, the owner or operator will not be required to participate in another COTP initiated unannounced exercise for at least 3 years from the date of the exercise.

(c) A facility owner or operator shall participate in Area exercises as directed by the applicable On-Scene Coordinator. The Area exercises will involve equipment deployment to respond to the spill scenario developed by the Exercise Design Team, of which the facility owner or operator will be a member. After participating in an Area exercise, a facility owner or operator will not be required to participate in another Area exercise for at least 6 years.

(d) The facility owner or operator shall ensure that adequate records of

all required exercises are maintained at the facility for 3 years. Records shall be made available to the Coast Guard upon request.

(e) The response plan submitted to meet the requirements of this subpart must specify the planned exercise program. The plan must detail the exercise program, including the types of exercises, frequency, scope, objectives and the scheme for exercising the entire response plan every 3 years.

(f) Compliance with the National Preparedness for Response Exercise Program (PREP) Guidelines will satisfy the facility response plan exercise requirements.

§154.1057 Inspection and maintenance of response resources.

(a) A facility owner or operator required to submit a response plan under this part must ensure that—

(1) Containment booms, skimmers, vessels, and other major equipment listed or referenced in the plan are periodically inspected and maintained in good operating condition, in accordance with manufacturer's recommendations, and best commercial practices; and

(2) All inspection and maintenance is documented and that these records are maintained for 3 years.

(b) For equipment which must be inspected and maintained under this section the Coast Guard may—

(1) Verify that the equipment inventories exist as represented;

(2) Verify the existences of records required under this section;

(3) Verify that the records of inspection and maintenance reflect the actual condition of any equipment listed or referenced; and

(4) Inspect and require operational tests of equipment.

(c) This section does not apply to containment booms, skimmers, vessels, and other major equipment listed or referenced in the plan and ensured available from an oil spill removal organization through the written consent required under §154.1028(a)(5).

§154.1060 Submission and approval procedures.

(a) The owner or operator of a facility to which this subpart applies shall submit one copy of a facility response plan meeting the requirements of this subpart to the COTP for initial review and, if appropriate, approval.

(b) The owner or operator of a facility to which this subpart applies shall include a statement certifying that the plan meets the applicable requirements of subparts F, G, H, and I of this part, as appropriate.

(c) For an MTR facility that is located in the inland response zone where the EPA Regional Administrator is the predesignated Federal On-Scene Coordinator, the COTP may consult with the EPA Federal On-Scene Coordinator prior to any final approval.

(d) For an MTR facility identified in §154.1015(c) of this subpart that is also required to prepare a response plan under 40 CFR part 112, if the COTP determines that the plan meets all applicable requirements and the EPA Regional Administrator raises no objection to the response plan contents, the COTP will notify the facility owner or operator in writing that the plan is approved.

(e) The plan will be valid for a period of up to 5 years. The facility owner or operator must resubmit an updated plan every 5 years as follows:

(1) For facilities identified in only §154.1015(b) of this subpart, the 5-year period will commence on the date the plan is submitted to the COTP.

(2) For facilities identified in §154.1015(c) of this subpart, the 5-year period will commence on the date the COTP approves the plan.

(3) All resubmitted response plans shall be accompanied by a cover letter containing a detailed listing of all revisions to the response plan.

(f) For an MTR facility identified in §154.1015(c)(2) the COTP will notify the facility owner or operator in writing that the plan is approved.

(g) If a COTP determines that a plan does not meet the requirements of this subpart either upon initial submission or upon 5-year resubmission, the COTP will return the plan to the facility owner or operator along with an explanation of the response plan's deficiencies. The owner or operator must correct any deficiencies in accordance with §154.1070 and return the plan to the COTP within the time specified by

the COTP in the letter describing the deficiencies.

(h) The facility owner or operator and the qualified individual and the alternative qualified individual shall each maintain a copy of the most current response plan submitted to the COTP. One copy must be maintained at the facility in a position where the plan is readily available to persons in charge of conducting transfer operations.

§ 154.1065 Plan review and revision procedures.

(a) A facility owner or operator must review his or her response plan(s) annually. This review shall incorporate any revisions to the plan, including listings of fish and wildlife and sensitive environments identified in the ACP in effect 6 months prior to plan review.

(1) For an MTR facility identified in § 154.1015(c) of this subpart as a ''significant and substantial harm facility,'' this review must occur within 1 month of the anniversary date of COTP approval of the plan. For an MTR facility identified in § 154.1015(b) of this subpart, as a ''substantial harm facility'' this review must occur within 1 month of the anniversary date of submission of the plan to the COTP.

(2) The facility owner or operator shall submit any revision(s) to the response plan to the COTP and all other holders of the response plan for information or approval, as appropriate.

(i) Along with the revisions, the facility owner or operator shall submit a cover letter containing a detailed listing of all revisions to the response plan.

(ii) If no revisions are required, the facility owner or operator shall indicate the completion of the annual review on the record of changes page.

(iii) The COTP will review the revision(s) submitted by the owner or operator and will give written notice to the owner or operator of any COTP objection(s) to the proposed revisions within 30 days of the date the revision(s) were submitted to the COTP. The revisions shall become effective not later than 30 days from their submission to the COTP unless the COTP indicates otherwise in writing as provided in this paragraph. If the COTP indicates that the revision(s) need to be modified before implementation, the owner or operator will modify the revision(s) within the time period set by the COTP.

(3) Any required revisions must be entered in the plan and noted on the record of changes page.

(b) The facility owner or operator shall submit revisions to a previously submitted or approved plan to the COTP and all other holders of the response plan for information or approval within 30 days, whenever there is—

(1) A change in the facility's configuration that significantly affects the information included in the response plan;

(2) A change in the type of oil (petroleum oil group) handled, stored, or transported that affects the required response resources;

(3) A change in the name(s) or capabilities of the oil spill removal organization required by § 154.1045;

(4) A change in the facility's emergency response procedures;

(5) A change in the facility's operating area that includes ports or geographic area(s) not covered by the previously approved plan. A facility may not operate in an area not covered in a plan previously submitted or approved, as appropriate, unless the revised plan is approved or interim operating approval is received under § 154.1025; or

(6) Any other changes that significantly affect the implementation of the plan.

(c) Except as required in paragraph (b) of this section, revisions to personnel and telephone number lists included in the response plan do not require COTP approval. The COTP and all other holders of the response plan shall be advised of these revisions and provided a copy of the revisions as they occur.

(d) The COTP may require a facility owner or operator to revise a response plan at any time as a result of a compliance inspection if the COTP determines that the response plan does not meet the requirements of this subpart or as a result of inadequacies noted in the response plan during an actual pollution incident at the facility.

§154.1070 Deficiencies.

(a) The cognizant COTP will notify the facility owner or operator in writing of any deficiencies noted during review of a response plan, drills observed by the Coast Guard, or inspection of equipment or records maintained in connection with this subpart.

(b) Deficiencies shall be corrected within the time period specified in the written notice provided by the COTP. The facility owner or operator who disagrees with a deficiency issued by the COTP may appeal the deficiency to the cognizant COTP within 7 days or the time specified by the COTP to correct the deficiency, whichever is less. This time commences from the date of receipt of the COTP notice. The owner or operator may request a stay from the COTP decision pending appeal in accordance with §154.1075.

(c) If the facility owner or operator fails to correct any deficiencies or submit a written appeal, the COTP may invoke the provisions of §154.1025 prohibiting the facility from storing, handling, or transporting oil.

§154.1075 Appeal process.

(a) Any owner or operator of a facility who desires to appeal the classification that a facility could reasonably be expected to cause substantial harm or significant and substantial harm to the environment, shall submit a written request to the cognizant COTP requesting review and reclassification by the COTP. The facility owner or operator shall identify those factors to be considered by the COTP. The factors to be considered by the COTP regarding reclassification of a facility include, but are not limited to, those listed in §154.1016(b). After considering all relevant material presented by the facility owner or operator and any additional material available to the COTP, the COTP will notify the facility owner or operator of the decision on the reclassification of the facility.

(b) Any facility owner or operator directly affected by an initial determination or action of the COTP may submit a written request to the cognizant COTP requesting review and reconsideration of the COTP's decision or action. The facility owner or operator shall identify those factors to be considered by the COTP in making his or her decision on reconsideration.

(c) Within 10 days of the COTP's decision under paragraph (b) of this section, the facility owner or operator may appeal the decision of the COTP to the District Commander. This appeal shall be made in writing via the cognizant COTP to the District Commander of the district in which the office of the COTP is located.

(d) Within 30 days of the District Commander's decision, the facility owner or operator may formally appeal the decision of the District Commander. This appeal shall be submitted in writing to Commandant (G-MOR) via the District Commander.

(e) When considering an appeal, the COTP, District Commander, or Commandant may stay the effect of the decision or action being appealed pending the determination of the appeal.

[CGD 91–036, 61 FR 7930, Feb. 29, 1996, as amended by CGD 96–026, 61 FR 33666, June 28, 1996]

Subpart G—Additional Response Plan Requirements for a Trans-Alaska Pipeline Authorization Act (TAPAA) Facility Operating in Prince William Sound, Alaska

SOURCE: CGD 91–036, 61 FR 7930, Feb. 29, 1996, unless otherwise noted.

§154.1110 Purpose and applicability.

(a) This subpart establishes oil spill response planning requirements for a facility permitted under the Tans-Alaska Pipeline Authorization Act (TAPAA), in addition to the requirements of subpart F of this part. The requirements of this subpart are intended for use in developing response plans and identifying response resources during the planning process. They are not performance standards.

(b) The information required by this subpart must be included in the Prince William Sound facility-specific appendix to the facility response plan required by subpart F of this part.

§154.1115 Definitions.

In addition to the definitions in this section, the definitions in §§154.105 and

154.1020 apply to this subpart. As used in this subpart—

Crude oil means any liquid hydrocarbon mixture occurring naturally in the earth, whether or not treated to render it suitable for transportation, and includes crude oil from which certain distillate fractions may have been removed, and crude oil to which certain distillate fractions may have been added.

Non-crude oil means any oil other than crude oil.

Prince William Sound means all State and Federal waters within Prince William Sound, Alaska, including the approach to Hinchinbrook Entrance out to and encompassing Seal Rocks.

§ 154.1120 Operating restrictions and interim operating authorization.

(a) The owner or operator of a TAPAA facility may not operate in Prince William Sound, Alaska, unless the requirements of this subpart as well as § 154.1025 have been met. The owner or operator of a TAPAA facility shall certify to the COTP that he or she has provided, through an oil spill removal organization required by § 154.1125, the necessary response resources to remove, to the maximum extend practicable, a worst case discharge or a discharge of 200,000 barrels of oil, whichever is grater, in Prince William Sound.

(b) Coast Guard approval of a TAPAA facility response plan is effective only so long as the appropriate Regional Citizens Advisory Council(s) is funded pursuant to the requirements of section 5002(k) of the Oil Pollution Act of 1990 (Pub. L. 101–380; 104 Stat. 484, 550).

§ 154.1125 Additional response plan requirements.

(a) The owner or operator of a TAPAA facility shall include the following information in the Prince William Sound appendix to the response plan required by subpart F of this part:

(1) *Oil spill removal organization.* Identification of an oil spill removal organization that shall—

(i) Perform response activities;

(ii) Provide oil spill removal and containment training, including training in the operation of prepositioned equipment for personnel, including local residents and fishermen, from the following locations in Prince William Sound:

(A) Valdez;

(B) Tatitlek;

(C) Cordova;

(D) Whittier;

(E) Chenega; and

(F) Fish hatcheries located at Port San Juan, Main Bay, Esther Island, Cannery Creek, and Solomon Gulch.

(iii) Provide a plan for training, in addition to the personnel listed in paragraph (a)(1)(ii) of this section, sufficient numbers of trained personnel to remove, to the maximum extent practicable, a worst case discharge; and

(iv) Address the responsibilities required in § 154.1035(b)(3)(iii).

(2) *Exercises.* Identification of exercise procedures that must—

(i) Provide for two exercises of the oil spill removal organization each year that test the ability of the prepositioned equipment and trained personnel required under this subpart to perform effectively;

(ii) Consist of both announced and unannounced drills; and

(iii) Include design(s) for exercises that test either the entire appendix or individual components(s).

(3) *Testing, inspection, and certification.* Identification of a testing, inspecting, and certification program for the prepositioned response equipment required in § 154.1130 that must provide for—

(i) Annual testing and equipment inspection in accordance with the manufacturer's recommended procedures, to include—

(A) Start-up and running under load all electrical motors, pumps, power packs, air compressors, internal combustion engines, and oil recovery devices; and

(B) Removal for inspection of no less than one-third of required boom from storage annually, such that all boom will have been removed and inspected within a period of 3 years; and

(ii) Records of equipment tests and inspection.

(iii) Use of an independent entity to certify that the equipment is on-site and in good operating condition and that required tests and inspection have

been preformed. The independent entity must have appropriate training and expertise to provide this certification.

(4) *Prepositioned response equipment.* Identification and location of the prepositioned response equipment required in §154.1130 including the make, model, and effective daily recovery rate of each oil recovery resource.

(b) The owner or operator of a TAPAA facility shall submit to the COTP a schedule for the training and drills required by the geographic-specific appendix for Prince William Sound for the following calendar year.

(c) All records required by this section must be available for inspection by the COTP.

§154.1130 Requirements for prepositioned response equipment.

The owner or operator of a TAPAA facility shall provide the following prepositioned response equipment, located within Prince William Sound, in addition to that required by §§154.1035, 154.1045, or 154.1050:

(a) On-water recovery equipment with a minimum effective daily recovery rate of 30,000 barrels capable of being a scene within 2 hours of notification of a discharge.

(b) On-water storage capacity of 100,000 barrels for recovered oily material capable of being on scene within 2 hours of notification of a discharge.

(c) On-water recovery equipment with a minimum effective daily recovery rate of 40,000 barrels capable of being on scene within 18 hours of notification of discharge.

(d) On-water storage capacity of 300,000 barrels for recovered oily material capable of being on scene within 12 hours of notification of a discharge.

(e) On-water recovery devices and storage equipment located in communities at strategic locations.

(f) Equipment as identified below, for the locations identified in §154.1125(a)(1)(ii) sufficient for the protection of the environment in these locations:

(1) Boom appropriate for the specific locations.

(2) Sufficient boats to deploy boom and sorbents.

(3) Sorbent materials.

(4) Personnel protective clothing and equipment.

(5) Survival equipment.

(6) First aid supplies.

(7) Buckets, shovels, and various other tools.

(8) Decontamination equipment.

(9) Shoreline cleanup equipment.

(10) Mooring equipment.

(11) Anchored buoys at appropriate locations to facilitate the positioning of defensive boom.

(12) Other appropriate removal equipment for the protection of the environment as identified by the COTP.

§154.1135 Response plan development and evaluation criteria.

The following response times must be used in determining the on scene arrival time in Prince William Sound for the response resources required by §154.1045:

	Tier 1 (hrs.)	Tier 2 (hrs.)	tier 3 (hrs.)
Prince William Sound Area	12	24	36

§154.1140 TAPAA facility contracting with a vessel.

The owner or operator of a TAPAA facility may contract with a vessel owner or operator to meet some of all of the requirements of subpart G of part 155 of this chapter. The extent to which these requirements are met by the contractual arrangement will be determined by the COTP.

Subpart H—Response Plans for Animal Fats and Vegetable Oils Facilities

SOURCE: CGD 91–036, 61 FR 7931, Feb. 29, 1996, unless otherwise noted.

§154.1210 Purpose and applicability.

This subpart establishes oil spill response planning requirements for an owner or operator of a facility that handles, stores, or transports animal fats and vegetable oils. The requirements of this subpart are intended for use in developing response plans and identifying response resources during the planning process. They are not performance standards.

§ 154.1220 Response plan submission requirements.

An owner or operator of a facility that handles, stores, or transports animal fats and vegetable oils shall submit a response plan in accordance with the requirements of this subpart, and with all sections of subpart F of this part, except §§ 154.1045 and 154.1047, which apply to petroleum oils.

§ 154.1225 Response plan development and evaluation criteria for facilities that handle, store, or transport animal fats and vegetable oils.

(a) An owner or operator of a facility that handles, stores, or transports animal fats and vegetable oils must provide information in his or her plan that identifies—

(1) Procedures and strategies for responding to a worst case discharge of animal fats and vegetable oils to the maximum extent practicable; and

(2) Sources of the equipment and supplies necessary to locate, recover, and mitigate such a discharge.

(b) An owner or operator of a facility that handles, stores, or transports animal fats and vegetable oils must ensure that any equipment identified in a response plan is capable of operating in the conditions expected in the geographic area(s) in which the facility operates using the criteria in section 2 and Table 1 of appendix C of this part. When evaluating the operability of equipment, the facility owner or operator must consider limitations that are identified in the ACPs for the COTP zone in which the facility is located, including—

(1) Ice conditions;

(2) Debris;

(3) Temperature ranges; and

(4) Weather-related visibility.

(c) The owner or operator of a facility that handles, stores, or transports animal fats and vegetable oils must identify the response resources that are available by contract or other means as described in § 154.1228(a). The equipment identified in a response plan must include—

(1) Containment boom, sorbent boom, or other methods for containing oil floating on the surface or to protect shorelines from impact;

(2) Oil recovery devices appropriate for the type of animal fats or vegetable oils handled; and

(3) Other appropriate equipment necessary to respond to a discharge involving the type of oil handled.

(d) Response resources identified in a response plan under paragraph (c) of this section must be capable of commencing an effective on-scene response within the times specified in this paragraph for the applicable operating area:

	Tier 1 (hrs.)	Tier 2	Tier 3
Higher volume port area	6	N/A	N/A
Great Lakes	12	N/A	N/A
All other river and canal, inland, nearshore, and offshore areas	12	N/A	N/A

(e) A response plan for a facility that handles, stores, or transports animal fats and vegetable oils must identify response resources with firefighting capability. The owner or operator of a facility that does not have adequate firefighting resources located at the facility or that can not rely on sufficient local firefighting resources must identify and ensure, by contract or other approved means as described in § 154.1228(a), the availability of adequate firefighting resources. The response plan must also identify an individual located at the facility to work with the fire department on animal fats and vegetable oil fires. This individual shall also verify that sufficient well-trained firefighting resources are available within a reasonable response time to a worst case scenario. The individual may be the qualified individual as defined in § 154.1020 and identified in the response plan or another appropriate individual located at the facility.

(f) The response plan for a facility that is located in any environment with year-round preapproval for use of dispersants and that handles, stores, or transports animal fats and vegetable oils may request a credit for up to 25 percent of the worst case planning volume set forth by subpart F of this part. To receive this credit, the facility owner or operator must identify in the plan and ensure, by contract or other approved means as described in

§154.1228(a), the availability of specified resources to apply the dispersants and to monitor their effectiveness. The extent of the credit for dispersants will be based on the volumes of the dispersant available to sustain operations at the manufacturers' recommended dosage rates. Other spill mitigation techniques, including mechanical dispersal, may be identified in the response plan provided they are in accordance with the NCP and the applicable ACP. Resources identified for plan credit should be capable of being on scene within 12 hours of a discovery of a discharge. Identification of these resources does not imply that they will be authorized for use. Actual authorization for use during a spill response will be governed by the provisions of the NCP and the applicable ACP.

§154.1228 Methods of ensuring the availability of response resources by contract or other approved means.

(a) When required in this subpart, the availability of response resources must be ensured by the following methods:

(1) The identification of an oil spill removal organization with specified equipment and personnel available within stipulated response times in specified geographic areas. The organization must provide written consent to being identified in the plan;

(2) A document which——

(i) Identifies the personnel, equipment, and services capable of being provided by the oil spill removal organization within stipulated response times in the specified geographic areas;

(ii) Sets out the parties' acknowledgment that the oil spill removal organization intends to commit the resources in the event of a response;

(iii) Permits the Coast Guard to verify the availability of the identified response resources through tests, inspections, and drills;

(iv) Is referenced in the response plan;

(3) Active membership in a local or regional oil spill removal organization that has identified specified personnel and equipment required under this subpart that are available to response to a discharge within stipulated response times in the specified geographic areas;

(4) Certification by the facility owner or operator that specified personnel and equipment required under this subpart are owned, operated, or under the direct control of the facility owner or operator, and are available within stipulated response times in the specified geographic areas; or

(5) A written contractual agreement with an oil spill removal organization. The agreement must identify and ensure the availability of specified personnel and equipment required under this subpart within stipulated response times in the specified geographic areas.

(b) The contracts and documents required in paragraph (a) of this section must be retained at the facility and must be produced for review upon request by the COTP.

Subpart I—Response Plans for Other Non-Petroleum Oil Facilities

SOURCE: CGD 91–036, 61 FR 7932, Feb. 29, 1996, unless otherwise noted.

§154.1310 Purpose and applicability.

This subpart establishes oil spill response planning requirements for an owner or operator of a facility that handles, stores, or transports other non-petroleum oils. The requirements of this subpart are intended for use in developing response plans and identifying response resources during the planning process. They are not performance standards.

§154.1320 Response plan submission requirements.

An owner or operator of a facility that handles, stores, or transports other non-petroleum oils shall submit a response plan in accordance with the requirements of this subpart, and with all sections of subpart F of this part, except §§154.1045 and 154.1047, which apply to petroleum oils.

§154.1325 Response plan development and evaluation criteria for facilities that handle, store, or transport other non-petroleum oils.

(a) An owner or operator of a facility that handles, stores, or transports other non-petroleum oils must provide information in his or her plan that identifies—

(1) Procedures and strategies for responding to a worst case discharge of other non-petroleum oils to the maximum extent practicable; and

(2) Sources of the equipment and supplies necessary to locate, recover, and mitigate such a discharge.

(b) An owner or operator of a facility that handles, stores, or transports other non-petroleum oils must ensure that any equipment identified in a response plan is capable of operating in the conditions expected in the geographic area(s) in which the facility operates using the criteria in Table 1 of appendix C of this part. When evaluating the operability of equipment, the facility owner or operator must consider limitations that are identified in the ACPs for the COTP zone in which the facility is located, including—

(1) Ice conditions;

(2) Debris;

(3) Temperature ranges; and

(4) Weather-related visibility.

(c) The owner or operator of a facility that handles, stores, or transports other non-petroleum oils must identify the response resources that are available by contract or other approved means as described in §154.1028(a). The equipment identified in a response plan must include—

(1) Containment boom, sorbent boom, or other methods for containing oil floating on the surface or to protect shorelines from impact;

(2) Oil recovery devices appropriate for the type of other non-petroleum oils handled; and

(3) Other appropriate equipment necessary to respond to a discharge involving the type of oil handled.

(d) Response resources identified in a response plan under paragraph (c) of this section must be capable of commencing an effective on-scene response within the times specified in this paragraph for the applicable operating area:

	Tier 1 (hrs.)	Tier 2	Tier 3
Higher volume port area	6	N/A	N/A
Great Lakes	12	N/A	N/A
All other river and canal, inland, nearshore, and offshore areas	12	N/A	N/A

(e) A response plan for a facility that handles, stores, or transports other non-petroleum oils must identify response resources with firefighting capability. The owner or operator of a facility that does not have adequate firefighting resources located at the facility or that cannot rely on sufficient local firefighting resources must identify and ensure, by contract or other approved means as described in §154.1028(a), the availability of adequate firefighting resources. The response plan must also identify an individual located at the facility to work with the fire department on other non-petroleum oil fires. This individual shall also verify that sufficient well-trained firefighting resources are available within a reasonable response time to a worst case scenario. The individual may be the qualified individual as defined in §154.1020 and identified in the response plan or another appropriate individual located at the facility.

(f) The response plan for a facility that is located in any environment with year-round preapproval for use of dispersants and that handles, stores, or transports other non-petroleum oils may request a credit for up to 25 percent of the worst case planning volume set forth by subpart F of this part. To receive this credit, the facility owner or operator must identify in the plan and ensure, by contract or other approved means as described in §154.1028(a), the availability of specified resources to apply the dispersants and to monitor their effectiveness. The extent of the credit will be based on the volumes of the dispersant available to sustain operations at the manufacturers' recommended dosage rates. Identification of these resources does not imply that they will be authorized for use. Actual authorization for use during a spill response will be governed by the provisions of the NCP and the applicable ACP.

APPENDIX A TO PART 154—GUIDELINES FOR DETONATION FLAME ARRESTERS

This appendix contains the draft ASTM standard for detonation flame arresters. Devices meeting this standard will be accepted by the Commandant (G–MSO).

1. *Scope*

1.1 This standard provides the minimum requirements for design, construction, performance and testing of detonation flame arresters.

2. *Intent*

2.1 This standard is intended for detonation flame arresters protecting systems containing vapors of flammable or combustible liquids where vapor temperatures do not exceed 60 °C. For all tests, the test media defined in 14.1.1 can be used except where detonation flame arresters protect systems handling vapors with a maximum experimental safe gap (MESG) below 0.9 millimeters. Detonation flame arresters protecting such systems must be tested with appropriate media (the same vapor or a media having a MESG no greater than the vapor). Various gases and their respective MESG are listed in attachment 1.

2.2 The tests in this standard are intended to qualify detonation flame arresters for all in-line applications independent of piping configuration provided the operating pressure is equal to or less than the maximum operating pressure limit specified in the manufacturer's certification and the diameter of the piping system in which the detonation arrester is to be installed is equal to or less than the piping diameter used in the testing.

NOTE: Detonation flame arresters meeting this standard as Type I devices, which are certified to be effective below 0 °C and which can sustain three stable detonations without being damaged or permanently deformed, also comply with the minimum requirements of the International Maritime Organization, Maritime Safety Committee Circular No. 373 (MSC/Circ. 373/Rev.1).

3. *Applicable Documents*

3.1 ASTM Standards (1)

A395 Ferritic Ductile Iron Pressure-Retaining Castings For Use At Elevated Temperatures.

F722 Welded Joints for Shipboard Piping Systems

F1155 Standard Practice for Selection and Application of Piping System Materials

3.2 ANSI Standards (2)

B16.5 Pipe Flanges and Flanged Fittings.

3.3 Other Documents

3.3.1 ASME Boiler and Pressure Vessel Code (2)

Section VIII, Division 1, Pressure Vessels

Section IX, Welding and Brazing Qualifications.

3.3.2 International Maritime Organization, Maritime Safety Committee (3)

MSC/Circ. 373/Rev. 1—Revised Standards for the Design, Testing and Locating of Devices to Prevent the Passage of Flame into Cargo Tanks in Tankers.

3.3.3 International Electrotechnical Commission (4)

Publication 79–1—Electrical Apparatus for Explosive Gas Atmospheres.

4. *Terminology*

4.1 $\Delta P/P_o$—The dimensionless ratio, for any deflagration and detonation test of 14.3, of the maximum pressure increase (the maximum pressure minus the initial pressure), as measured in the piping system on the side of the arrester where ignition begins by the device described in paragraph 14.3.3, to the initial absolute pressure in the piping system. The initial pressure should be greater than or equal to the maximum operating pressure specified in paragraph 11.1.7.

4.2 Deflagration—A combustion wave that propagates subsonically (as measured at the pressure and temperature of the flame front) by the transfer of heat and active chemical species to the unburned gas ahead of the flame front.

4.3 Detonation—A reaction in a combustion wave propagating at sonic or supersonic (as measured at the pressure and temperature of the flame front) velocity. A detonation is stable when it has a velocity equal to the speed of sound in the burnt gas or may be unstable (overdriven) with a higher velocity and pressure.

4.4 Detonation flame arrester—A device which prevents the transmission of a detonation and a deflagration.

4.5 Flame speed—The speed at which a flame propagates along a pipe or other system.

4.6 Flame Passage—The transmission of a flame through a device.

4.7 Gasoline Vapors—A non-leaded petroleum distillate consisting essentially of aliphatic hydrocarbon compounds with a boiling range approximating 65 °C/75 °C.

5. *Classification*

5.1 The two types of detonation flame arresters covered in this specification are classified as follows:

5.1.1 Type I—Detonation flame arresters acceptable for applications where stationary flames may rest on the device.

5.1.2 Type II—Detonation flame arresters acceptable for applications where stationary flames are unlikely to rest on the device, and further methods are provided to prevent flame passage when a stationary flame occurs. One example of ''further methods'' is a temperature monitor and an automatic shutoff valve.

6. *Ordering Information*

6.1 Orders for detonation flame arresters under this specification shall include the following information as applicable:

6.1.1 Type (I or II).

6.1.2 Nominal pipe size.

6 1.3 Each gas or vapor in the system and the corresponding MESG.

6.1.4 Inspection and tests other than specified by this standard.

6.1.5 Anticipated ambient air temperature range.

[1] Footnotes appear at the end of this article.

6.1.6 Purchaser's inspection requirements (see section 10.1).

6.1.7 Description of installation.

6.1.8 Materials of construction (see section 7).

6.1.9 Maximum flow rate and the maximum design pressure drop for that maximum flow rate.

6.1.10 Maximum operating pressure.

7. *Materials*

7.1 The detonation flame arrester housing, and other parts or bolting used for pressure retention, shall be constructed of materials listed in ASTM F1155, or section VIII, Division 1 of the ASME Boiler and Pressure Vessel Code. Cast and malleable iron shall not be used; however, ductile cast iron in accordance with ASTM A395 may be used.

7.1.1 Arresters, elements, gaskets, and seals must be made of materials resistant to attack by seawater and the liquids and vapors contained in the system being protected (see section 6.1.3).

7.2 Nonmetallic materials, other than gaskets and seals, shall not be used in the construction of pressure retaining components of the detonation flame arrester.

7.2.1 Nonmetallic gaskets and seals shall be non-combustible and suitable for the service intended.

7.3 Bolting materials, other than that of section 7.1, shall be at least equal to those listed in Table 1 of ANSI B16.5.

7.4 The possibility of galvanic corrosion shall be considered in the selection of materials.

7.5 All other parts shall be constructed of materials suitable for the service intended.

8. *Other Requirements*

8.1 Detonation flame arrester housings shall be gas tight to prevent the escape of vapors.

8.2 Detonation flame arrester elements shall fit in the housing in a manner that will insure tightness of metal-to-metal contacts in such a way that flame cannot pass between the element and the housing.

8.2.1 The net free area through detonation flame arrester elements shall be at least 1.5 times the cross-sectional area of the arrester inlet.

8.3 Housings, elements, and seal gasket materials shall be capable of withstanding the maximum and minimum pressures and temperatures to which the device may be exposed under both normal and the specified fire test conditions in section 14, and shall be capable of withstanding the hydrostatic pressure test of section 9.2.3.

8.4 Threaded or flanged pipe connections shall comply with the applicable B16 standards in ASTM F1155. Welded joints shall comply with ASTM F722.

8.5 All flat joints of the housing shall be machined true and shall provide for a joint having adequate metal-to-metal contact.

8.6 Where welded construction is used for pressure retaining components, welded joint design details, welding and non-destructive testing shall be in accordance with Section VIII, Division 1, of the ASME Code and ASTM F722. Welders and weld procedures shall be qualified in accordance with section IX of the ASME Code.

8.7 The design of detonation flame arresters shall allow for ease of inspection and removal of internal elements for replacement, cleaning or repair without removal of the entire device from the system.

8.8 Detonation flame arresters shall allow for efficient drainage of condensate without impairing their efficiency to prevent the passage of flame. The housing may be fitted with one or more drain plugs for this purpose. The design of a drain plug should be such so that by cursory visual inspection it is obvious whether the drain has been left open.

8.9 All fastenings shall be protected against loosening.

8.10 Detonation flame arresters shall be designed and constructed to minimize the effect of fouling under normal operating conditions.

8.11 Detonation flame arresters shall be capable of operating over the full range of ambient air temperatures anticipated.

8.12 Detonation flame arresters shall be of first class workmanship and free from imperfections which may affect their intended purpose.

8.13 Detonation flame arresters shall be tested in accordance with section 9.

9. *Tests*

9.1 Tests shall be conducted by an independent laboratory capable of performing the tests. The manufacturer, in choosing a laboratory, accepts that it is a qualified independent laboratory by determining that it has (or has access to) the apparatus, facilities, personnel, and calibrated instruments that are necessary to test detonation flame arresters in accordance with this standard.

9.1.1 A test report shall be prepared by the laboratory which shall include:

9.1.1.1 Detailed drawings of the detonation flame arrester and its components (including a parts list identifying the materials of construction).

9.1.1.2 Types of tests conducted and results obtained. This shall include the maximum temperature reached and the length of testing time in section 14.2 in the case of Type II detonation flame arresters.

9.1.1.3 Description of approved attachments (reference 9.2.6).

9.1.1.4 Types of gases or vapors for which the detonation flame arrester is approved.

9.1.1.5 Drawings of the test rig.

9.1.1.6 Record of all markings found on the tested detonation flame arrester.

9.1.1.7 A report number.

9.2 One of each model Type I and Type II detonation flame arrester shall be tested. Where approval of more than one size of a detonation flame arrester model is desired, only the largest and smallest sizes need be tested provided it is demonstrated by calculation and/or other testing that intermediate size devices have equal or greater strength to withstand the force of a detonation and have equivalent detonation arresting characteristics. A change of design, material, or construction which may affect the corrosion resistance, or ability to resist endurance burning, deflagrations or detonations shall be considered a change of model for the purpose of this paragraph.

9.2.1 The detonation flame arrester shall have the same dimensions, configuration, and most unfavorable clearances expected in production units.

9.2.2 A corrosion test shall be conducted. In this test, a complete detonation flame arrester, including a section of pipe similar to that to which it will be fitted, shall be exposed to a 20% sodium chloride solution spray at a temperature of 25 °C for a period of 240 hours, and allowed to dry for 48 hours. Following this exposure, all movable parts shall operate properly and there shall be no corrosion deposits which cannot be washed off.

9.2.3 The detonation flame arrester shall be subjected to a hydrostatic pressure test of at least 350 psig for ten minutes without rupturing, leaking, or showing permanent distortion.

9.2.4 Flow characteristics as declared by the manufacturer, shall be demonstrated by appropriate tests.

9.2.5 Detonation flame arresters shall be tested for endurance burn and deflagration/detonation in accordance with the test procedures in section 14. Type I detonation flame arresters shall show no flame passage when subjected to both tests. Type II detonation flame arresters shall show no evidence of flame passage during the detonation/deflagration tests in section 14.3. Type II detonation flame arresters shall be tested for endurance burn in accordance with section 14.2. From the endurance burn test of a Type II detonation flame arresters, the maximum temperature reached and the test duration shall be recorded and provided as part of the laboratory test report.

9.2.6 Where a detonation flame arrester is provided with cowls, weather hoods and deflectors, etc., it shall be tested in each configuration in which it is provided.

9.2.7 Detonation flame arresters which are provided with a heating arrangement designed to maintain the surface temperature of the device above 85 °C shall pass the required tests at the maximum heated operating temperature.

9.2.8 Each finished detonation arrester shall be pneumatically tested at 10 psig to ensure there are no defects or leakage.

10. *Inspection*

10.1 The manufacturer shall afford the purchaser's inspector all reasonable access necessary to assure that the device is being furnished in accordance with this standard. All examinations and inspections shall be made at the place of manufacture, unless otherwise agreed upon.

10.2 Each finished detonation arrester shall be visually and dimensionally checked to ensure that the device corresponds to this standard, is certified in accordance with section 11 and is marked in accordance with section 12. Special attention shall be given to the checking of welds and the proper fit-ups of joints (see sections 8.5 and 8.6).

11. *Certification*

11.1 Manufacturer's certification that a detonation flame arrester meets this standard shall be provided in an instruction manual. The manual shall include as applicable:

11.1.1 Installation instructions and a description of all configurations tested (reference paragraph 9.2.6). Installation instructions to include the device's limitations.

11.1.2 Operating instructions.

11.1.3 Maintenance requirements.

11.1.3.1 Instructions on how to determine when arrester cleaning is required and the method of cleaning.

11.1.4 Copy of test report (see section 9.1.1).

11.1.5 Flow test data, maximum temperature and time tested (Type II).

11.1.6 The ambient air temperature range over which the device will effectively prevent the passage of flame.

(NOTE: Other factors such as condensation and freezing of vapors should be evaluated at the time of equipment specification.)

11.1.7 The maximum operating pressure for which the device is suitable.

12. *Marking*

12.1 Each detonation flame arrester shall be permanently marked indicating:

12.1.1 Manufacturer's name or trademark.

12.1.2 Style, type, model or other manufacturer's designation for the detonation flame arrester.

12.1.3 Size of the inlet and outlet.

12.1.4 Type of device (Type I or II).

12.1.5 Direction of flow through the detonation flame arrester.

12.1.6 Test laboratory and report number.

12.1.7 Lowest MESG of gases that the detonation flame arrester is suitable for.

12.1.8 ASTM designation of this standard.

12.1.9 Ambient air operating temperature range.

12.1.10 Maximum operating pressure.

13. *Quality Assurance*

13.1 Detonation flame arresters shall be designed, manufactured and tested in a manner that ensures they meet the characteristics of the unit tested in accordance with this standard.

13.2 The detonation flame arrester manufacturer shall maintain the quality of the arresters that are designed, tested and marked in accordance with this standard. At no time shall a detonation flame arrester be sold with this standard designation that does not meet the requirements herein.

14. *Test Procedures for Detonation Arresters*

14.1 *Media/Air Mixtures*

14.1.1 For vapors from flammable or combustible liquids with a MESG greater than or equal to 0.9 mm, technical grade hexane or gasoline vapors shall be used for all tests in this section except technical grade propane may be used for the deflagration/detonation tests in section 14.3. For vapors with a MESG less than 0.9 mm, the specific vapor (or alternatively, a media with a MESG less than or equal to the MESG of the vapor) must be used as the test medium in all Section 14 tests.

14.1.2 Hexane, propane, gasoline and other test vapors shall be mixed with air to form the most easily ignitable mixture. (5)

14.2 *Endurance Burn Test Procedure*

14.2.1 An endurance burning test shall be carried out as follows:

14.2.1.1 The test rig shall consist of an apparatus producing an explosive mixture, a small tank with a diaphragm, a prototype of the detonation flame arrester and a firing source in close proximity to the test device (see Figure 1). The detonation flame arrester shall be installed so that the mixture emission is vertically upwards, or installed in the position for which it is designed and which will cause the most severe heating of the device under the prescribed endurance burn conditions. In this position the mixture shall be ignited.

14.2.1.2 Endurance burn test shall start by using the most easily ignitable test vapor/air mixture with the aid of a pilot flame or a spark igniter at the outlet. The flammable mixture may be reignited as necessary in the course of the endurance burn.

14.2.1.3 Temperature measurement will be performed on the surface of the arrester element half way between the center and its edge.

14.2.1.4 By varying the proportions of the flammable mixture and the flow rate, the detonation flame arrester shall be heated by a stable flame on the surface of the arrester until the highest obtainable temperature is reached on the ignited side or until the temperature on the side which was not ignited (protected side) rises 100 °C.

14.2.1.5 The flammable mixture proportions will then be varied again until the conditions which result in the highest temperature on the protected side are achieved. This temperature shall be maintained for a period of ten minutes, after which the flow shall be stopped and the conditions observed. The highest attainable temperature is considered to have been reached when any subsequent rise of temperature does not exceed 0.5 °C per minute over a ten minute period.

14.2.1.6 If difficulty arises in establishing the highest attainable temperature on the protected side, the following criteria shall apply. When the increase in temperature on the protected side occurs so slowly that its temperature does not rise 100 °C, the conditions which produced the highest temperature on the ignited side of the arrester will be maintained for two hours. For the condition in which the temperature on the protected side continues to rise at a rate in excess of 0.5 °C per minute for a 10 minute period, endurance burning shall be continued, using the most severe conditions of flammable mixtures and flow rate, for a period of two hours. In either of these cases, at the end of the two hour period, the flow shall be stopped and the conditions observed. The two hour interval shall be measured commencing with the setting of the conditions which produced the most severe conditions of mixture and flow rate. For Type I detonation flame arresters, flame passage shall not occur during this test. For Type II detonation flame arresters, the maximum temperature obtained, and the time elapsed from the time when the most severe conditions are set to when flame passage occurs, shall be recorded. However, for Type II detonation flame arresters the test may be terminated 15 minutes after setting the most severe conditions on the protected side.

14.3 *Deflagration/Detonation Test Procedure*

14.3.1 A detonation flame arrester shall be installed at one end of a pipe of the same diameter as the inlet of the detonation flame arrester (see Figure 2). The length and configuration of the test pipe shall develop a stable detonation (6) at the device and shall be capable, by change in its length or configuration, of developing deflagrations and unstable (overdriven) detonations as measured on the side of the pipe where ignition occurs (run-up side). For deflagration testing, two test piping arrangements shall be used on the outlet side of the detonation flame arrester (the side which is not ignited). In both of the following end arrangements, the outlet side pipe diameter shall be equal to that on the run-up side. In one arrangement, the outlet side pipe shall be at least 10 pipe diameters long with a plastic bag over the free end. (Alternate end of pipe closures are also acceptable provided they easily give way during the course of the test, and the closure allows the required gas concentration to be maintained throughout the test piping arrangement.) In the other arrangement the outlet side pipe shall be fitted with

a restriction located 0.6 meters from the outlet side arrester flange. The size of the restriction for each nominal size detonation flame arrester shall be as follows:

Nominal pipe diameter (inches)	Restriction diameter (inches)
3	½
4	½
6	1
8	1½
10	1½
12	2
18	2
24	2

The entire pipe shall be filled with the most easily ignitable vapor/air mixture to a test pressure corresponding to or greater than the upper limit of the device's maximum operating pressure (see 11.1.7). In order to obtain this test pressure, a device such as a bursting disc may be fitted on the open end of the device in place of the plastic bag. The concentration of the mixture should be verified by appropriate testing of the gas composition. The vapor/air mixture shall then be ignited.

14.3.2 Flame speeds shall be measured by optical devices capable of providing accuracy of +/− 5%. These devices shall be situated no more than a distance equal to 3% of the length of the run-up pipe apart with one device no more than 8 inches from the end of the test pipe to which the detonation flame arrester is attached. In addition, each outlet arrangement described in paragraph 14.3.1 shall be fitted with an optical device located no more than 8 inches from the detonation flame arrester outlet. (7)

14.3.3 Explosion pressures within the pipe shall be measured by a high frequency transducer situated in the test pipe no more than 8 inches from the run-up side of the housing of the detonation flame arrester.

14.3.4 Using the first end arrangement (10 pipe diameter outlet) described in paragraph 14.3.1, a series of tests shall be conducted to determine the test pipe length and configuration that results in the maximum unstable (overdriven) detonation having the maximum measured flame speed at the detonation flame arrester. (These tests may also be carried out using a single length of pipe with igniters spaced at varying distances from the arrester.) The flame speeds, explosion pressures and test pipe configurations shall be recorded for each of these tests. The piping configuration that resulted in the highest recorded unstable (overdriven) detonation flame speed shall be used, and the device shall be subjected to at least four additional unstable (overdriven) detonations. In the course of testing, the device shall also demonstrate its ability to withstand five stable detonations, five deflagrations (as determined by flame speed) where $\Delta P/P_o$ was less than 1 and five deflagrations (as determined by flame speed) where $\Delta P/P_o$ was greater than 1 but less than 10. Initiation of deflagrations shall be at several locations to generate a range for $\Delta P/P_o$. Deflagration tests using the restricted outlet arrangement described in paragraph 14.3.1 shall then be conducted. In these tests the device shall demonstrate its ability to stop five deflagrations (as determined by flame speed) generated by the same configurations which resulted in $\Delta P/P_o$ being less than 1 during the deflagration tests which were conducted without the restricted end arrangements, and five deflagrations (as determined by flame speed) generated by the same configurations which resulted in $\Delta P/P_o$ being greater than 1 but less than 10 during the deflagration tests which were conducted without the restricted end arrangements. No evidence of flame passage shall occur during these tests. The flame speeds and explosion pressures for each of these tests shall be recorded.

14.3.5 A device that successfully passes the tests of 14.3.4 shall be considered to be directional (suitable for arresting a detonation advancing only from the direction as tested) except;

14.3.5.1 A device may be tested according to 14.3.4 for detonations approaching from either direction, or

14.3.5.2 The design of the device is symmetrical where each end may be considered to be identical when approached by a detonation from either direction.

(1) Available from the American Society for Testing and Materials (ASTM), 100 Barr Harbor Dr., West Conshohocken, PA 19428–2959.

(2) Available from the American Society of Mechanical Engineers International, Three Park Avenue, New York, NY 10016–5990.

(3) Available from the International Maritime Organization, 4 Albert Embankment, London SE1 7SR, England.

(4) Available from the International Electrotechnical Commission, 1 rue de Varembe, Geneva, Switzerland.

(5) See IEC Publication 79–1.

(6) Some data are available for the estimation of flame speeds in horizontal pipes without detonation flame arresters. Some data indicate that the presence of small obstacles, fittings or bends in the test pipe can accelerate the flame speeds appreciably.

(7) Other pressure and/or flame speed measuring techniques may be used if effective.

FIGURE 1

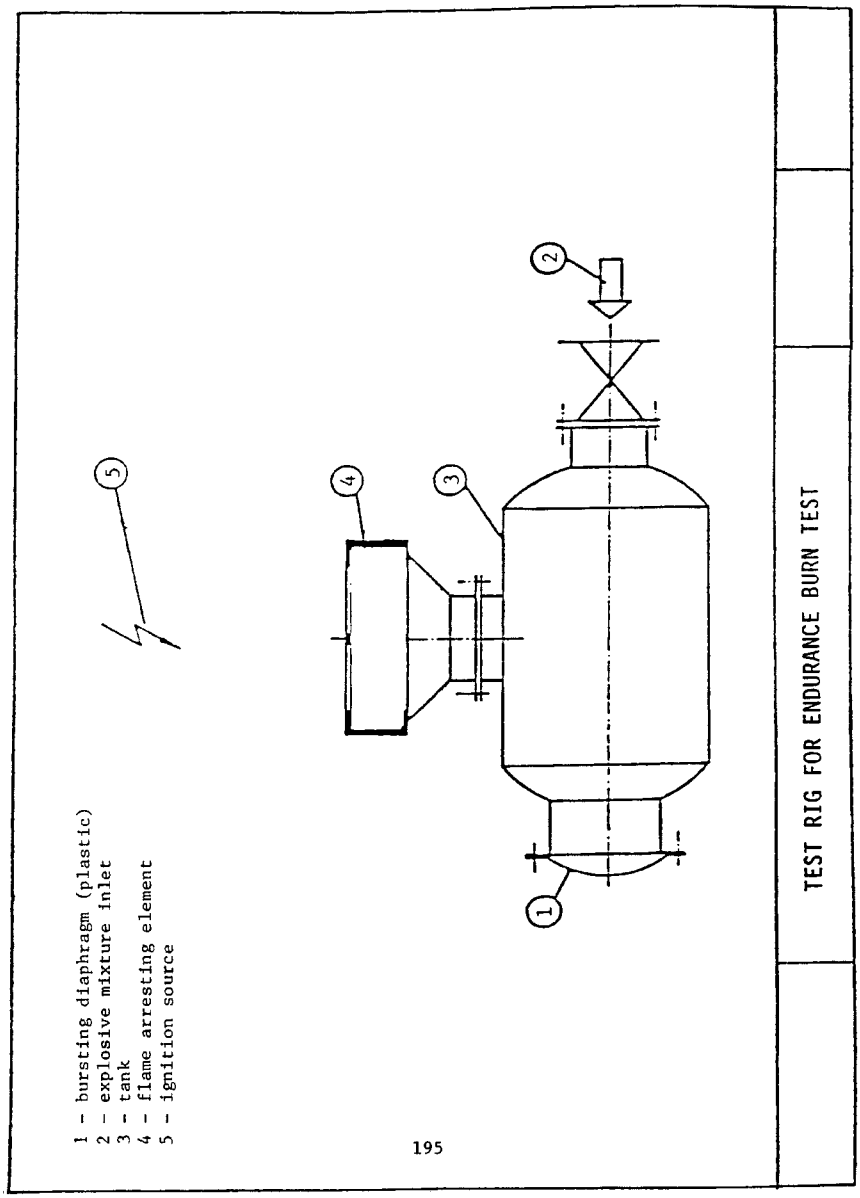
1 - bursting diaphragm (plastic)
2 - explosive mixture inlet
3 - tank
4 - flame arresting element
5 - ignition source
195
TEST RIG FOR ENDURANCE BURN TEST

Figure 2

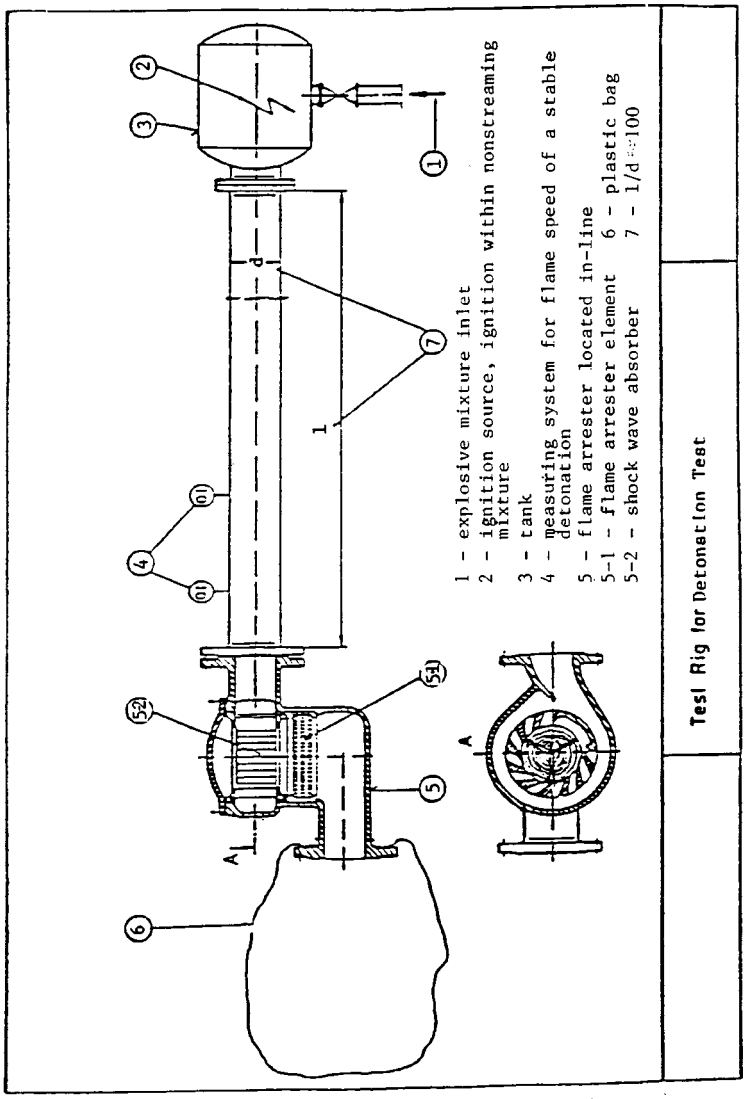
1 - explosive mixture inlet
2 - ignition source, ignition within nonstreaming mixture
3 - tank
4 - measuring system for flame speed of a stable detonation
5 - flame arrester located in-line
5-1 - flame arrester element
6 - plastic bag
5-2 - shock wave absorber
7 - l/d=100
Test Rig for Detonation Test

196

ATTACHMENT 1

Inflammable gas or vapour	Experimental maximum safe gap	
	mm	in.
Methane	1.170	0.046
Blast furnace gas	1.193	0.047
Propane	0.965	0.038
Butane	1.066	0.042
Pentane	1.016	0.040
Hexane	0.965	0.038
Heptane	0.965	0.038
Iso-octane	1.040	0.041
Decane	1.016	0.040
Benzene	0.99	0.039
Xylene	1.066	0.042
Cyclohexane	0.94	0.037
Acetone	1.016	0.040
Ethylene	0.71	0.028
Methyl-ethyl-ketone	1.016	0.040
Carbon monoxide	0.915	0.036
Methyl-acetate	0.990	0.039
Ethyl-acetate	1.04	0.041
Propyl-acetate	1.04	0.041
Butyl-acetate	1.016	0.040
Amyl-acetate	0.99	0.039
Methyl alcohol	0.915	0.036
Ethyl alcohol	1.016	0.040
Iso-butyl-alcohol	0.965	0.038
Butyl-alcohol (Normal)	0.94	0.037
Amyl-alcohol	0.99	0.039
Ethyl-ether	0.864	0.034
Coal gas (H_2 57%)	0.482	0.019
Acetylene	≤0.025	≤0.001
Carbon disulphide	0.203	0.008
Hydrogen	0.102	0.004
Blue water gas (H_2 53% CO 47%)	0.203	0.008
Ethyl nitrate	≤0.025	≤0.001
Ammonia	[1] 3.33	[1] 0.133
Ethylene oxide	0.65	0.026
Ethyl nitrite	0.922	0.038

[1] Approximately.

[CGD 88–102, 55 FR 25435, June 21, 1990; 55 FR 39270, Sept. 26, 1990, as amended by CGD 96–026, 61 FR 33666, June 28, 1996; USCG–1999–5832, 64 FR 34715, June 29, 1999]

APPENDIX B TO PART 154—STANDARD SPECIFICATION FOR TANK VENT FLAME ARRESTERS

1. *Scope*

1.1 This standard provides the minimum requirements for design, construction, performance and testing of tank vent flame arresters.

2. *Intent*

2.1 This standard is intended for flame arresters protecting systems containing vapors of flammable or combustible liquids with a flashpoint that does not exceed 60 °C. The test media defined in 14.1.1 can be used except where arresters protect systems handling vapors with a maximum experimental safe gap (MESG) below 0.9 millimeters. Flame arresters protecting such systems must be tested with appropriate media (the same vapor or a media having a MESG no greater than the vapor). Various gases and their respective MESG are listed in Attachment 1.

NOTE: Flame arresters meeting this standard also comply with the minimum requirements of the International Maritime Organization, Maritime Safety Committee Circular No. 373 (MSC/Circ. 373/Rev. 1).

3. *Applicable Documents*

3.1 ASTM Standards (1)F722 Welded Joints for Shipboard Piping Systems; F1155 Standard Practice for Selection and Application of Piping System Materials

3.2 ANSI Standards (2) B16.5 Pipe Flanges and Flanged Fittings.

3.3 Other Documents

3.3.1 ASME Boiler and Pressure Vessel Code (2) section VIII, Division 1, Pressure Vessels; section IX, Welding and Brazing Qualifications.

3.3.2 International Maritime Organization, Maritime Safety Committee (3) MSC/Circ. 373/Rev. 1—Revised Standards for the Design, Testing and Locating of Devices to Prevent the Passage of Flame into Cargo Tanks in Tankers.

3.3.3 International Electrotechnical Commission (4) Publication 79.1—Electrical Apparatus for Explosive Gas Atmospheres.

(1) American Society for Testing and Materials (ASTM), 100 Barr Harbor Dr., West Conshohocken, PA 19428–2959.

(2) Available from the American Society of Mechanical Engineers International, Three Park Avenue, New York, NY 10016–5990.

(3) Available from the International Maritime Organization, 4 Albert Embankment, London SEl 7SR, England.

(4) Available from the International Electrotechnical Commission, 1 rue de Varembe, Geneva, Switzerland

4. *Terminology*

4.1 Flame arrester—A device to prevent the passage of flame in accordance with a specified performance standard. Its flame arresting element is based on the principle of quenching.

4.2 Flame speed—The speed at which a flame propagates along a pipe or other system.

4.3 Flame Passage—The transmission of a flame through a flame arrester.

4.4 Gasoline Vapors—A non-leaded petroleum distillate consisting essentially of aliphatic hydrocarbon compounds with a boiling range approximating 65 °C/75 °C.

5. *Classification*

5.1 The two types of flame arresters covered in this specification are classified as follows:

5.1.1 Type I—Flame arresters acceptable for end-of-line applications.

(1) Footnotes appear at the end of this article.

5.1.2 Type II—Flame arresters acceptable for in-line applications.

6. *Ordering Information*

6.1 Orders for flame arresters under this specification shall include the following information as applicable:

6.1.1 Type (I or II).

6.1.2 Nominal pipe size.

6.1.3 Each gas or vapor in the tank being protected by the flame arrester, and the corresponding MESG.

6.1.4 Inspection and tests other than specified by this standard.

6.1.5 Anticipated ambient air temperature range.

6.1.6 Purchaser's inspection requirements (see section 10.1).

6.1.7 Description of installation (distance and configuration of pipe between the arrester, and the atmosphere or potential ignition source) (see section 9.2.4.2).

6.1.8 Materials of construction (see section 7).

6.1.9 Maximum flow rate and the design pressure drop for that maximum flow rate.

7. *Materials*

7.1 The flame arrester housing, and other parts or bolting used for pressure retention, shall be constructed of materials listed in ASTM F1155, or section VIII, Division 1 of the ASME Boiler and Pressure Vessel Code.

7.1.1 Arresters, elements, gaskets, and seals must be of materials resistant to attack by seawater and the liquids and vapors contained in the tank being protected (see section 6.1.3).

7.2 Nonmetallic materials, other than gaskets and seals, shall not be used in the construction of pressure retaining components of the flame arrester.

7.2.1 Nonmetallic gaskets and seals shall be non-combustible and suitable for the service intended.

7.3 Bolting materials, other than that of Section 7.1, shall be at least equal to those listed in Table 1 of ANSI B16.5.

7.4 The possibility of galvanic corrosion shall be considered in the selection of materials.

7.5 All other parts shall be constructed of materials suitable for the service intended.

8. *Other Requirements*

8.1 Flame arrester housings shall be gas tight to prevent the escape of vapors.

8.2 Flame arrester elements shall fit in the housing in a manner that will insure tightness of metal-to-metal contacts in such a way that flame cannot pass between the element and the housing.

8.2.1 The net free area through flame arrester elements shall be at least 1.5 times the cross-sectional area of the arrester inlet.

8.3 Housings and elements shall be of substantial construction and designed for the mechanical and other loads intended during service. In addition, they shall be capable of withstanding the maximum and minimum pressures and temperatures to which the device may be exposed under both normal and the specified fire test conditions in section 14.

8.4 Threaded or flanged pipe connections shall comply with the applicable B16 standards in ASTM F1155. Welded joints shall comply with ASTM F722.

8.5 All flat joints of the housing shall be machined true and shall provide for a joint having adequate metal-to-metal contact.

8.6 Where welded construction is used for pressure retaining components, welded joint design details, welding and non-destructive testing shall be in accordance with section VIII, Division 1, of the ASME Code and ASTM F722. Welders and weld procedures shall be qualified in accordance with section IX of the ASME Code.

8.7 The design of flame arresters shall allow for ease of inspection and removal of internal elements for replacement, cleaning or repair without removal of the entire device from the system.

8.8 Flame arresters shall allow for efficient drainage of condensate without impairing their efficiency to prevent the passage of flame.

8.9 All fastenings shall be protected against loosening.

8.10 Flame arresters shall be designed and constructed to minimize the effect of fouling under normal operating conditions.

8.11 Flame arresters shall be capable of operating over the full range of ambient air temperatures anticipated.

8.12 End-of-line flame arresters shall be so constructed as to direct the efflux vertically upward.

8.13 Flame arresters shall be of first class workmanship and free from imperfections which may affect their intended purpose.

8.14 Tank vent flame arresters shall show no flame passage when subjected to the tests in 9.2.4.

9. *Prototype Tests*

9.1 Tests shall be conducted by an independent laboratory capable of performing the tests. The manufacturer, in choosing a laboratory, accepts that it is a qualified independent laboratory by determining that it has (or has access to) the apparatus, facilities, personnel, and calibrated instruments that are necessary to test flame arresters in accordance with this standard.

9.1.1 A test report shall be prepared by the laboratory which shall include:

9.1.1.1 Detailed drawings of the flame arrester and its components (including a parts list identifying the materials of construction).

9.1.1.2 Types of tests conducted and results obtained.

9.1.1.3 Specific advice on approved attachments (see section 9.2.4.1).

9.1.1.4 Types of gases or vapors for which the flame arrester is approved (see section 6.1.3).

9.1.1.5 Drawings of the test rig.

9.1.1.6 Record of all markings found on the tested flame arrester.

9.1.1.7 A report number.

9.2 One of each model Type I and Type II flame arrester shall be tested. Where approval of more than one size of a flame arrester model is desired, the largest and smallest sizes shall be tested. A change of design, material, or construction which may affect the corrosion resistance, endurance burn, or flashback capabilities of the flame arrester shall be considered a change of model for the purpose of this paragraph.

9.2.1 The flame arrester shall have the same dimensions, configuration, and the most unfavorable clearances expected in production units.

9.2.2 A corrosion test shall be conducted. In this test, a complete arrester, including a section of pipe similar to that to which it will be fitted, shall be exposed to a 20% sodium chloride solution spray at a temperature of 25 degrees C for a period of 240 hours, and allowed to dry for 48 hours. Following this exposure, all movable parts shall operate properly and there shall be no corrosion deposits which cannot be washed off.

9.2.3 Performance characteristics as declared by the manufacturer, such as flow rates under both positive and negative pressure, operating sensitivity, flow resistance, and velocity, shall be demonstrated by appropriate tests.

9.2.4 Tank vent flame arresters shall be tested for endurance burn and flashback in accordance with the test procedures in section 14. The following constraints apply:

9.2.4.1 Where a Type I flame arrester is provided with cowls, weather hoods and deflectors, etc., it shall be tested in each configuration in which it is provided.

9.2.4.2 Type II arresters shall be specifically tested with the inclusion of all pipes, tees, bends, cowls, weather hoods, etc., which may be fitted between the arrester and the atmosphere.

9.2.5 Devices which are provided with a heating arrangement shall pass the required tests at the heated temperature.

9.2.6 After all tests are completed, the device shall be disassembled and examined, and no part of the device shall be damaged or show permanent deformation.

10. *Inspection*

10.1 The manufacturer shall afford the purchaser's inspector all reasonable facilities necessary to assure that the material is being furnished in accordance with this standard. All examinations and inspections shall be made at the place of manufacture, unless otherwise agreed upon.

10.2 Each finished flame arrester shall be visually and dimensionally checked to ensure that the device corresponds to this standard, is certified in accordance with section 11 and is marked in accordance with section 12. Special attention shall be given to checking the proper fit-up of joints (see sections 8.5 and 8.6)

11. *Certification*

11.1 Manufacturer's certification that a flame arrester has been constructed in accordance with this standard shall be provided in an instruction manual. The manual shall include as applicable:

11.1.1 Installation instructions and a description of all configurations tested (reference paragraph 9.2.4.1 and 9.2.4.2). Installation instructions to include manufacturer's recommended limitations based on all configurations tested.

11.1.2 Operating instructions.

11.1.3 Maintenance requirements.

11.1.3.1 Instructions on how to determine when flame arrester cleaning is required and the method of cleaning.

11.1.4 Copy of test report (see section 9.1.1).

11.1.5 Flow test data, including flow rates under both positive and negative pressures, operating sensitivity, flow resistance, and velocity.

11.1.6 The ambient air temperature range over which the device will effectively prevent the passage of flame. (NOTE: Other factors such as condensation and freezing of vapors should be evaluated at the time of equipment specification.)

12. *Marking*

12.1 Each flame arrester shall be permanently marked indicating:

12.1.1 Manufacturer's name or trademark.

12.1.2 Style, type, model or other manufacturer's designation for the flame arrester.

12.1.3 Size of the inlet and outlet.

12.1.4 Type of device (Type I or II).

12.1.5 Direction of flow through the flame arrester.

12.1.6 Test laboratory and report number.

12.1.7 Lowest MESG of gases for which the flame arrester is suitable for.

12.1.8 Ambient air operating temperature range.

12.1.9 ASTM designation of this standard.

13. *Quality Assurance*

13.1 Flame arresters shall be designed, manufactured and tested in a manner that ensures they meet the characteristics of the unit tested in accordance with this standard.

13.2 The flame arrester manufacturer shall maintain the quality of the flame arresters that are designed, tested and marked in accordance with this standard. At no time shall a flame arrester be sold with this standard designation that does not meet the requirements herein.

14. *Test Procedures for Flame Arresters*

14.1 Media/Air Mixtures

14.1.1 For vapors from flammable or combustible liquids with a MESG greater than or

equal to 0.9 mm, technical grade hexane or gasoline vapors shall be used for all tests in this section except technical grade propane may be used for the flashback test in Section 14.2. For vapors with a MESG less than 0.9 mm, the specific vapor (or alternatively, a media with a MESG less than or equal to the MESG of the vapor) must be used as the test medium in all section 14 tests.

14.1.2 Hexane, propane, gasoline and chemical vapors shall be mixed with air to form the most easily ignitable mixture.(5)

14.2 *Flashback Test*

14.2.1 A flashback test shall be carried out as follows:

14.2.1.1 The test rig shall consist of an apparatus producing an explosive mixture, a small tank with a diaphragm, a prototype of the flame arrester, a plastic bag (6) and a firing source in three positions (see Figure 1).(7)

14.2.1.2 The tank, flame arrester assembly and the plastic bag enveloping the prototype flame arrester shall be filled so that this volume contains the most easily ignitable vapor/air mixture.(8) The concentration of the mixture should be verified by appropriate testing of the gas composition in the plastic bag. Three ignition sources shall be installed along the axis of the bag, one close to the flame arrester, another as far away as possible therefrom, and the third at the midpoint between these two. These three sources shall be fired in succession, one during each of the three tests. Flame passage shall not occur during this test.

14.2.1.3 If flame passage occurs, the tank diaphragm will burst and this will be audible and visible to the operator by the emission of a flame. Flame, heat and pressure sensors may be used as an alternative to a bursting diaphragm.

14.3 *Endurance Burn Test*

14.3.1 An endurance burning test shall be carried out as follows:

14.3.1.1 The test rig as referred to in 14.2 may be used, without the plastic bag. The flame arrester shall be so installed that the mixture emission is vertical. In this position the mixture shall be ignited.

14.3.1.2 Endurance burning shall be achieved by using the most easily ignitable test vapor/air mixture with the aid of a pilot flame or a spark igniter at the outlet. By varying the proportions of the flammable mixture and the flow rate, the arrester shall be heated until the highest obtainable temperature on the cargo tank side of the arrester is reached. The highest attainable temperature may be considered to have been reached when the rate of rise of temperature does not exceed 0.5 °C per minute over a ten minute period. This temperature shall be maintained for a period of ten minutes, after which the flow shall be stopped and the conditions observed. If difficulty arises in establishing the highest attainable temperature, the following criteria shall apply. When the temperature appears to be approaching the maximum temperature, using the most severe conditions of flammable mixtures and flow rate, but increases at a rate in excess of 0.5 °C per minute over a ten minute period, endurance burning shall be continued for a period of two hours after which the flow shall be stopped and the conditions observed. Flame passage shall not occur during this test.

(5) See IEC Publication 79–1.

(6) The dimensions of the plastic bag are dependent on those of the flame arrester. The plastic bag may have a circumference of 2 m, a length of 2.5 m and a wall thickness of .05 m.

(7) In order to avoid remnants of the plastic bag from falling back on to the flame arrester being tested after ignition of the fuel/air mixture, it may be useful to mount a coarse wire frame across the flame arrester within the plastic bag. The frame should be constructed so as not to interfere with the test result.

(8) See IEC Publication 79–1.

FIGURE 1

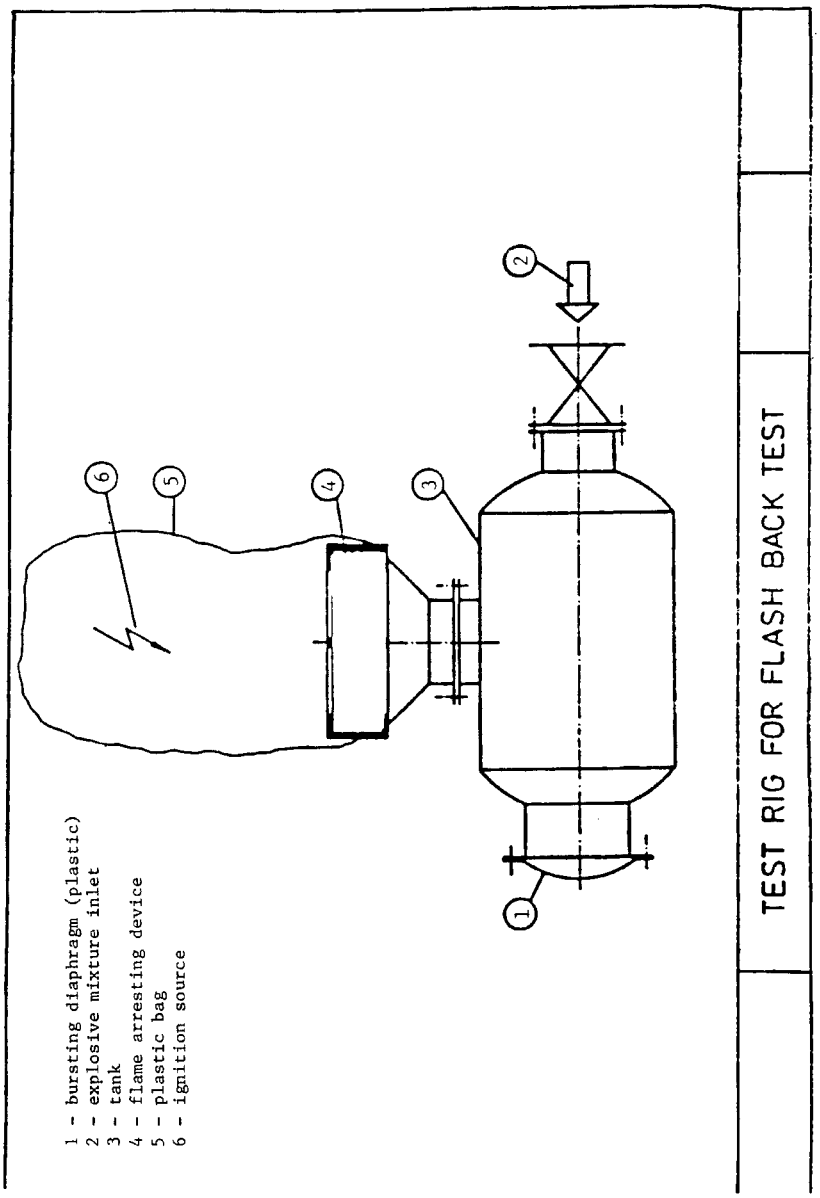
1 - bursting diaphragm (plastic)
2 - explosive mixture inlet
3 - tank
4 - flame arresting device
5 - plastic bag
6 - ignition source
1
2
3
4
5
6
TEST RIG FOR FLASH BACK TEST

ATTACHMENT 1

Inflammable gas or vapor	Experimental maximum safe gap	
	mm	in.
Methane	1.170	0.046
Blast furnace gas	1.193	0.047
Propane	0.965	0.038
Butane	1.066	0.042
Pentane	1.016	0.040
Hexane	0.965	0.038
Heptane	0.965	0.038
Iso-octane	1.040	0.041
Decane	1.016	0.040
Benzene	0.99	0.039
Xylene	1.066	0.042
Cyclohexane	0.94	0.037
Acetone	1.016	0.040
Ethylene	0.71	0.028
Methyl-ethyl-ketone	1.016	0.040
Carbon monoxide	0.915	0.036
Methyl-acetate	0.990	0.039
Ethyl-acetate	1.04	0.041
Propyl-acetate	1.04	0.041
Butyl-acetate	1.016	0.040
Amyl-acetate	0.99	0.039
Methyl alcohol	0.915	0.036
Ethyl alcohol	1.016	0.040
Iso-butyl-alcohol	0.965	0.038
Butyl-alcohol (Normal)	0.94	0.037
Amyl-alcohol	0.99	0.039
Ethyl-ether	0.864	0.034
Coal gas (H_2 57%)	0.482	0.019
Acetylene	<0.025	<0.001
Carbon disulphide	0.203	0.008
Hydrogen	0.102	0.004
Blue water gas (H_2 53% CO 47%)	0.203	0.008
Ethyl nitrate	<0.025	<0.001
Ammonia	[1]3.33	[1]0.133
Ethylene oxide	0.65	0.026
Ethyl nitrite	0.922	0.038

[1]Approximately.

[CGD 88–102, 55 FR 25441, June 21, 1990, as amended by USCG–1999–5832, 64 FR 34715, June 29, 1999]

APPENDIX C TO PART 154—GUIDELINES FOR DETERMINING AND EVALUATING REQUIRED RESPONSE RESOURCES FOR FACILITY RESPONSE PLANS

1. Purpose

1.1 The purpose of this appendix is to describe the procedures for identifying response resources to meet the requirements of subpart F of this part. These guidelines will be used by the facility owner or operator in preparing the response plan and by the Captain of the Port (COTP) when reviewing them. Response resources identified in subparts H and I of this part should be selected using the guidelines in section 2 and Table 1 of this appendix.

2. Equipment Operability and Readiness

2.1 All equipment identified in a response plan must be designed to operate in the conditions expected in the facility's geographic area. These conditions vary widely based on location and season. Therefore, it is difficult to identify a single stockpile of response equipment that will function effectively in each geographic location.

2.2 Facilities handling, storing, or transporting oil in more than one operating environment as indicated in Table 1 of this appendix must identify equipment capable of successfully functioning in each operating environment.

2.3 When identifying equipment for response plan credit, a facility owner or operator must consider the inherent limitations in the operability of equipment components and response systems. The criteria in Table 1 of this appendix should be used for evaluating the operability in a given environment. These criteria reflect the general conditions in certain operating areas.

2.3.1 The Coast Guard may require documentation that the boom identified in a response plan meets the criteria in Table 1. Absent acceptable documentation, the Coast Guard may require that the boom be tested to demonstrate that it meets the criteria in Table 1. Testing must be in accordance with ASTM F 715, ASTM F 989, or other tests approved by the Coast Guard.

2.4 Table 1 of this appendix lists criteria for oil recovery devices and boom. All other equipment necessary to sustain or support response operations in the specified operating environment must be designed to function in the same conditions. For example, boats which deploy or support skimmers or boom must be capable of being safely operated in the significant wave heights listed for the applicable operating environment.

2.5 A facility owner or operator must refer to the applicable local contingency plan or ACP, as appropriate, to determine if ice, debris, and weather-related visibility are significant factors in evaluating the operability of equipment. The local contingency plan or ACP will also identify the average temperature ranges expected in the facility's operating area. All equipment identified in a response plan must be designed to operate within those conditions or ranges.

2.6 The requirements of subparts F, G, H and I of this part establish response resource mobilization and response times. The distance of the facility from the storage location of the response resources must be used to determine whether the resources can arrive on scene within the stated time. A facility owner or operator shall include the time for notification, mobilization, and travel time of response resources identified to meet the maximum most probable discharge and Tier 1 worst case discharge response time requirements. For subparts F and G, tier 2 and 3 response resources must be notified and mobilized as necessary to meet the requirements for arrival on scene in accordance with §§154.1045 or 154.1047 of subpart F, or

§ 154.1135 of subpart G, as appropriate. An on water speed of 5 knots and a land speed of 35 miles per hour is assumed unless the facility owner or operator can demonstrate otherwise.

2.7 For subparts F and G, in identifying equipment, the facility owner or operator shall list the storage location, quantity, and manufacturer's make and model. For oil recovery devices, the effective daily recovery capacity, as determined using section 6 of this appendix must be included. For boom, the overall boom height (draft plus freeboard) should be included. A facility owner or operator is responsible for ensuring that identified boom has compatible connectors.

2.8 For subparts H and I, in identifying equipment, the facility owner or operator shall list the storage location, quantity, and manufacturer's make and model. For boom, the overall boom height (draft plus freeboard) should be included. A facility owner or operator is responsible for ensuring that identified boom has compatible connectors.

3. Determining Response Resources Required for the Average Most Probable Discharge

3.1 A facility owner or operator shall identify sufficient response resources available, through contract or other approved means as described in § 154.1028(a), to respond to the average most probable discharge. The equipment must be designed to function in the operating environment at the point of expected use.

3.2 The response resources must include:

3.2.1 1,000 feet of containment boom or two times the length of the largest vessel that regularly conducts oil transfers to or from the facility, whichever is greater, and a means deploying it available at the spill site within 1 hour of the discovery of a spill.

3.2.2 Oil recovery devices with an effective daily recovery capacity equal to the amount of oil discharged in an average most probable discharge or greater available at the facility within 2 hours of the detection of an oil discharge.

3.2.3 Oil storage capacity for recovered oily material indicated in section 9.2 of this appendix.

4. Determining Response Resources Required for the Maximum Most Probable Discharge

4.1 A facility owner or operator shall identify sufficient response resources available, by contract or other approved means as described in § 154.1028(a), to respond to discharges up to the maximum most probable discharge volume for that facility. This will require response resources capable of containing and collecting up to 1,200 barrels of oil or 10 percent of the worst case discharge, whichever is less. All equipment identified must be designed to operate in the applicable operating environment specified in Table 1 of this appendix.

4.2 Oil recovery devices identified to meet the applicable maximum most probable discharge volume planning criteria must be located such that they arrive on scene within 6 hours in higher volume port areas (as defined in 154.1020) and the Great Lakes and within 12 hours in all other areas.

4.3 Because rapid control, containment, and removal of oil is critical to reduce spill impact, the effective daily recovery capacity for oil recovery devices must equal 50 percent of the planning volume applicable for the facility as determined in section 4.1 of this appendix. The effective daily recovery capacity for oil recovery devices identified in the plan must be determined using the criteria in section 6 of this appendix.

4.4 In addition to oil recovery capacity, the plan must identify sufficient quantities of containment boom available, by contract or other approved means as described in § 154.1028(a), to arrive within the required response times for oil collection and containment and for protection of fish and wildlife and sensitive environments. While the regulation does not set required quantities of boom for oil collection and containment, the response plan must identify and ensure, by contract or other approved means as described in § 154.1028(a), the availability of the boom identified in the plan for this purpose.

4.5 The plan must indicate the availability of temporary storage capacity to meet the guidelines of section 9.2 of this appendix. If available storage capacity is insufficient to meet this level, then the effective daily recovery capacity must be derated to the limits of the available storage capacity.

4.6 The following is an example of a maximum most probable discharge volume planning calculation for equipment identification in a higher volume port area: The facility's worst case discharge volume is 20,000 barrels. Ten percent of this is 2,000 barrels. Since this is greater than 1,200 barrels, 1,200 barrels is used as the planning volume. The effective daily recovery capacity must be 50 percent of this, or 600 barrels per day. The ability of oil recovery devices to meet this capacity will be calculated using the procedures in section 6 of this appendix. Temporary storage capacity available on scene must equal twice the daily recovery rate as indicated in section 9 of this appendix, or 1,200 barrels per day. This is the information the facility owner or operator will use to identify and ensure the availability of, through contract or other approved means as described in § 154.1028(a), the required response resources. The facility owner will also need to identify how much boom is available for use.

5. Determining Response Resources Required for the Worst Case Discharge to the Maximum Extent Practicable

5.1 A facility owner or operator shall identify and ensure availability of, by contract or other approved means, as described in §154.1028(a), sufficient response resources to respond to the worst case discharge of oil to the maximum extent practicable. Section 7 of this appendix describes the method to determine the required response resources.

5.2 Oil spill response resources identified in the response plan and available through contract or other approved means, as described in §154.1028(a), to meet the applicable worst case discharge planning volume must be located such that they can arrive at the scene of a discharge within the times specified for the applicable response tiers listed in §154.1045.

5.3 The effective daily recovery capacity for oil recovery devices identified in a response plan must be determined using the criteria in section 6 of this appendix. A facility owner or operator shall identify the storage locations of all response resources that must be used to fulfill the requirements for each tier. The owner or operator of a facility whose required daily recovery capacity exceeds the applicable response capability caps in Table 5 of this appendix shall identify sources of additional equipment, their locations, and the arrangements made to obtain this equipment during a response. The owner or operator of a facility whose calculated planning volume exceeds the applicable contracting caps in Table 5 shall identify sources of additional equipment equal to twice the cap listed in Tiers 1, 2, and 3 or the amount necessary to reach the calculated planning volume, whichever is lower. The resources identified above the cap must be capable of arriving on scene not later than the Tiers 1, 2, and 3 response times in §154.1045. No contract is required. While general listings of available response equipment may be used to identify additional sources, a response plan must identify the specific sources, locations, and quantities of equipment that a facility owner or operator has considered in his or her planning. When listing Coast Guard classified oil spill removal organization(s) which have sufficient removal capacity to recover the volume above the response capability cap for the specific facility, as specified in Table 5 of this appendix, it is not necessary to list specific quantities of equipment.

5.4 A facility owner or operator shall identify the availability of temporary storage capacity to meet the requirements of section 9.2 of this appendix. If available storage capacity is insufficient to meet this requirement, then the effective daily recovery capacity must be derated to the limits of the availabile storage capacity.

5.5 When selecting response resources necessary to meet the response plan requirements, the facility owner or operator must ensure that a portion of those resources are capable of being used in close-to-shore response activities in shallow water. The following percentages of the on-water response equipment identified for the applicable geographic area must be capable of operating in waters of 6 feet or less depth:

(i) Offshore—10 percent

(ii) Nearshore/inland/Great Lakes/rivers and canals—20 percent.

5.6 In addition to oil spill recovery devices, a facility owner or operator shall identify sufficient quantities of boom that are available, by contract or other approved means as described in §154.1028(a), to arrive on scene within the required response times for oil containment and collection. The specific quantity of boom required for collection and containment will depend on the specific recovery equipment and strategies employed. A facility owner or operator shall also identify sufficient quantities of oil containment boom to protect fish and wildlife and sensitive environments for the number of days and geographic areas specified in Table 2. Sections 154.1035(b)(4)(iii) and 154.1040(a), as appropriate, shall be used to determine the amount of containment boom required, through contract or other approved means as described in §154.1028(a), to protect fish and wildlife and sensitive environments.

5.7 A facility owner or operator must also identify, through contract or other approved means as described in §154.1028(a), the availability of an oil spill removal organization capable of responding to a shoreline cleanup operation involving the calculated volume of oil and emulsified oil that might impact the affected shoreline. The volume of oil that must be planned for is calculated through the application of factors contained in Tables 2 and 3. The volume calculated from these tables is intended to assist the facility owner or operator in identifying a contractor with sufficient resources and expertise. This planning volume is not used explicitly to determine a required amount of equipment and personnel.

6. Determining Effective Daily Recovery Capacity for Oil Recovery Devices

6.1 Oil recovery devices identified by a facility owner or operator must be identified by manufacturer, model, and effective daily recovery capacity. These rates must be used to determine whether there is sufficient capacity to meet the applicable planning critieria for the average most probable discharge, maximum most probable discharge, and worst case discharge to the maximum extent practicable.

6.2 For the purpose of determining the effective daily recovery capacity of oil recovery devices, the formula listed in section

6.2.1 of this appendix will be used. This method considers potential limitations due to available daylight, weather, sea state, and percentage of emulsified oil in the recovered material. The Coast Guard may assign a lower efficiency factor to equipment listed in a response plan if it determines that such a reduction is warranted.

6.2.1 The following formula must be used to calculate the effective daily recovery capacity:

R=T×24 hours×E

R=Effective daily recovery capacity
T=Throughout rate in barrels per hour (nameplate capacity)
E=20 percent Efficiency factor (or lower factor as determined by Coast Guard)

6.2.2 For those devices in which the pump limits the throughput of liquid, throughput rate will be calculated using the pump capacity.

6.2.3 For belt or mop type devices, the throughput rate will be calculated using the speed of the belt or mop through the device, assumed thickness of oil adhering to or collected by the device, and surface area of the belt or mop. For purposes of this calculation, the assumed thickness of oil will be 1/4 inch.

6.2.4 Facility owners or operators including oil recovery devices whose throughput is not measurable using a pump capacity or belt/mop speed may provide information to support an alternative method of calculation. This information must be submitted following the procedures in paragraph 6.3.2 of this appendix.

6.3 As an alternative to 6.2, a facility owner or operator may submit adequate evidence that a different effective daily recovery capacity should be applied for a specific oil recovery device. Adequate evidence is actual verified performance data in spill conditions or tests using ASTM F 631, ASTM F 808, or an equivalent test approved by the Coast Guard.

6.3.1 The following formula must be used to calculate the effective daily recovery capacity under this alternative:

R=D×U

R=Effective daily recovery capacity
D=Average Oil Recovery Rate in barrels per hour (Item 26 in ASTM F 808; Item 13.1.15 in ASTM F 631; or actual performance data)
U=Hours per day that a facility owner or operator can document capability to operate equipment under spill conditions. Ten hours per day must be used unless a facility owner or operator can demonstrate that the recovery operation can be sustained for longer periods.

6.3.2 A facility owner or operator proposing a different effective daily recovery rate for use in a response plan shall provide data for the oil recovery devices listed. The following is an example of these calculations:

A weir skimmer identified in a response plan has a manufacturer's rated throughput at the pump of 267 gallons per minute (gpm).

267 gpm=381 barrels per hour
R=381×24×.2=1829 barrels per day

After testing using ASTM procedures, the skimmer's oil recovery rate is determined to be 220 gpm. The facility owner of operator identifies sufficient response resources available to support operations 12 hours per day.

220 gpm=314 barrels per hour
R=314×12=3768 barrels per day

The facility owner or operator will be able to use the higher rate if sufficient temporary oil storage capacity is available. Determinations of alternative efficiency factors under paragraph 6.2 or alternative effective daily recovery capacities under paragraph 6.3 of this appendix will be made by Commandant, (G–MOR), Coast Guard Headquarters, 2100 Second Street SW., Washington, DC 20593. Response contractors or equipment manufacturers may submit required information on behalf of multiple facility owners or operators directly in lieu of including the request with the response plan submission.

7. Calculating the Worst Case Discharge Planning Volumes

7.1 The facility owner or operator shall plan for a response to a facility's worst case discharge. The planning for on-water recovery must take into account a loss of some oil to the environment due to evaporative and natural dissipation, potential increases in volume due to emulsification, and the potential for deposit of some oil on the shoreline.

7.2 The following procedures must be used to calculate the planning volume used by a facility owner or operator for determining required on water recovery capacity:

7.2.1 The following must be determined: The worst case discharge volume of oil in the facility; the appropriate group(s) for the type of oil handled, stored, or transported at the facility (non-persistent (Group I) or persistent (Groups II, III, or IV)); and the facility's specific operating area. Facilities which handle, store, or transport oil from different petroleum oil groups must calculate each group separately. This information is to be used with Table 2 of this appendix to determine the percentages of the total volume to be used for removal capacity planning. This table divides the volume into three categories: Oil lost to the environment; oil deposited on the shoreline; and oil available for on-water recovery.

7.2.2 The on-water oil recovery volume must be adjusted using the appropriate emulsification factor found in Table 3 of this appendix. Facilities which handle, store, or transport oil from different petroleum

groups must assume that the oil group resulting in the largest on-water recovery volume will be stored in the tank or tanks identified as constituting the worst case discharge.

7.2.3 The adjusted volume is multiplied by the on-water oil recovery resource mobilization favor found in Table 4 of this appendix from the appropriate operating area and response tier to determine the total on-water oil recovery capacity in barrels per day that must be identified or contracted for to arrive on-scene with the applicable time for each response tier. Three tiers are specified. For higher volume port areas, the contracted tiers of resources must be located such that they can arrive on scene within 6, 30, and 54 hours of the discovery of an oil discharge. For all other river, inland, nearshore, offshore areas, and the Great Lakes, these tiers are 12, 36, and 60 hours.

7.2.4 The resulting on-water recovery capacity in barrels per day for each tier must be used to identify response resources necessary to sustain operations in the applicable operating area. The equipment must be capable of sustaining operations for the time period specified in Table 2 of this appendix. The facility owner or operator must identify and ensure the availability, through contract or other approved means as described in §154.1028(a), of sufficient oil spill recovery devices to provide the effective daily recovery oil recovery capacity required. If the required capacity exceeds the applicable cap specified in Table 5 of this appendix, then a facility owner or operator shall ensure, by contract or other approved means as described in §154.1028(a), only for the quantity of resources required to meet the cap, but shall identify sources of additional resources as indicated in §154.1045(m). The owner or operator of a facility whose planning volume exceeds the cap for 1993 must make arrangements to identify and ensure the availability, through contract or other approved means as described in §154.1028(a), of the additional capacity in 1998 or 2003, as appropriate. For a facility that handles, stores, or transports multiple groups of oil, the required effective daily recovery capacity for each group is calculated before applying the cap.

7.3 The following procedures must be used to calculate the planning volume for identifying shoreline cleanup capacity:

7.3.1 The following must be determined: The worst case discharge volume of oil for the facility; the appropriate group(s) for the type of oil handled, stored, or transported at the facility (non-persistent (Group I) or persistent (Groups II, III, or IV)); and the operating area(s) in which the facility operates. For a facility storing oil from different groups, each group must be calculated separately. Using this information, Table 2 of this appendix must be used to determine the percentages of the total planning volume to be used for shoreline cleanup resource planning.

7.3.2 The shoreline cleanup planning volume must be adjusted to reflect an emulsification factor using the same procedure as described in section 7.2.2.

7.3.3 The resulting volume will be used to identify an oil spill removal organization with the appropriate shoreline cleanup capability.

7.3.4 The following is an example of the procedure described above: A facility receives oil from barges via a dock located on a bay and transported by piping to storage tanks. The facility handles Number 6 oil (specific gravity .96) and stores the oil in tanks where it is held prior to being burned in an electric generating plant. The MTR segment of the facility has six 18-inch diameter pipelines running one mile from the dock-side manifold to several storage tanks which are located in the non-transportation-related portion of the facility. Although the facility piping has a normal working pressure of 100 pounds per square inch, the piping has a maximum allowable working pressure (MAWP) of 150 pounds per square inch. At MAWP, the pumping system can move 10,000 barrels (bbls) of Number 6 oil every hour through each pipeline. The facility has a roving watchman who is required to drive the length of the piping every 2 hours when the facility is receiving oil from a barge. The facility operator estimates that it will take approximately 10 minutes to secure pumping operations when a discharge is discovered. Using the definition of worst case discharge provided in §154.1029(b)(ii), the following calculation is provided:

	bbls.
2 hrs + 0.17 hour × 10,000 bbls per hour	21,700
Piping volume = 37,322 ft^3 ÷ 5.6 ft^3/bbl	+6,664
Discharge volume per pipe	28,364
Number of pipelines	×6
Worst case discharge from MTR facility	170,184

To calculate the planning volumes for onshore recovery:

Worst case discharge: 170,184 bbls. Group IV oil

Emulsification factor (from Table 3): 1.4

Operating Area impacted: Inland

Planned percent oil onshore recovery (from Table 2): Inland 70%

Planning volumes for onshore recovery: Inland 170,184 ×.7 × 1.4 = 166,780 bbls.

Conclusion: The facility owner or operator must contract with a response resource capable of managing a 166,780 barrel shoreline cleanup.

To calculate the planning volumes for onwater recovery:

Worst case discharge: 170,184 bbls. Group IV oil
Emulsification factor (from Table 3): 1.4
Operating Area impacted: Inland
Planned percent oil on-water recovery (from Table 2): Inland 50%
Planning volumes for on-water recovery: Inland 170,184 × .5 × 1.4 = 119,128 bbls.

To determine the required resources for on-water recovery for each tier, use the mobilization factors from Table 4:

	Tier 1	Tier 2	Tier 3
Inland = 119,128 bbls.	× .15	× .25	× .40
Barrels per day (pbd)	17,869	29,782	47,652

Conclusion: Since the requirements for all tiers for inland exceed the caps, the facility owner will only need to contract for 10,000 bpd for Tier 1, 20,000 bpd for Tier 2, and 40,000 bpd for Tier 3. Sources for the bpd on-water recovery resources above the caps for all three Tiers need only be identified in the response plan.

Twenty percent of the capability for Inland, for all tiers, must be capable of operating in water with a depth of 6 feet or less.

The facility owner or operator will also be required to identify or ensure, by contract or other approved means as described in § 154.1028(a), sufficient response resources required under §§ 154.1035(b)(4) and 154.1045(k) to protect fish and wildlife and sensitive environments identified in the response plan for the worst case discharge from the facility.

The COTP has the discretion to accept that a facility can operate only a limited number of the total pipelines at a dock at a time. In those circumstances, the worst case discharge must include the drainage volume from the piping normally not in use in addition to the drainage volume and volume of oil discharged during discovery and shut down of the oil discharge from the operating piping.

8. Determining the Availability of Alternative Response Methods

8.1 Response plans for facilities that handle, store, or transport Groups II or III persistent oils that operate in an area with year-round preapproval for dispersant use may receive credit for up to 25 percent of their required on-water recovery capacity for 1993 if the availability of these resources is ensured by contract or other approved means as described in § 154.1028(a). For response plan credit, these resources must be capable of being on-scene within 12 hours of a discharge.

8.2 To receive credit against any required on-water recover capacity a response plan must identify the locations of dispersant stockpiles, methods of shipping to a staging area, and appropriate aircraft, vessels, or facilities to apply the dispersant and monitor its effectiveness at the scene of an oil discharge.

8.2.1 Sufficient volumes of dispersants must be available to treat the oil at the dosage rate recommended by the dispersant manufacturer. Dispersants identified in a response plan must be on the NCP Product Schedule that is maintained by the Environmental Protection Agency. (Some states have a list of approved dispersants and within state waters only they can be used.)

8.2.2 Dispersant application equipment identified in a response plan for credit must be located where it can be mobilized to shoreside staging areas to meet the time requirements in section 8.1 of this appendix. Sufficient equipment capacity and sources of appropriate dispersants should be identified to sustain dispersant application operations for at least 3 days.

8.2.3 Credit against on-water recovery capacity in preapproved areas will be based on the ability to treat oil at a rate equivalent to this credit. For example, a 2,500 barrel credit against the Tier 1 10,000 barrel on-water cap would require the facility owner or operator to demonstrate the ability to treat 2,500 barrel/day of oil at the manufacturers recommended dosage rate. Assuming a dosage rate of 10:1, the plan would need to show stockpiles and sources of 250 barrels of dispersants at a rate of 250 barrels per day and the ability to apply the dispersant at that daily rate for 3 days in the geographic area in which the facility is located. Similar data would need to be provided for any additional credit against Tier 2 and 3 resources.

8.3 In addition to the equipment and supplies required, a facility owner or operator shall identify a source of support to conduct the monitoring and post-use effectiveness evaluation required by applicable regional plans and ACPs.

8.4 Identification of the response resources for dispersant application does not imply that the use of this technique will be authorized. Actual authorization for use during a spill response will be governed by the provisions of the NCP and the applicable regional plan or ACP. A facility owner or operator who operates a facility in areas with year-round preapproval of dispersant can reduce the required on-water recovery capacity for 1993 up to 25 percent. A facility owner or operator may reduce the required on water recovery cap increase for 1998 and 2003 up to 50 percent by identifying pre-approved alternative response methods.

8.5 In addition to the credit identified above, a facility owner or operator that operates in a year-round area pre-approved for dispersant use may reduce their required on water recovery cap increase for 1998 and 2003 by up to 50 percent by identifying non-mechanical methods.

8.6 The use of in-situ burning as a non-mechanical response method is still being studied. Because limitations and uncertainties remain for the use of this method, it may not be used to reduce required oil recovery capacity in 1993.

9. Additional Equipment Necessary to Sustain Response Operations

9.1 A facility owner or operator is responsible for ensuring that sufficient numbers of trained personnel and boats, aerial spotting aircraft, containment boom, sorbent materials, boom anchoring materials, and other supplies are available to sustain response operations to completion. All such equipment must be suitable for use with the primary equipment identified in the response plan. A facility owner or operator is not required to list these response resources, but shall certify their availability.

9.2 A facility owner or operator shall evaluate the availability of adequate temporary storage capacity to sustain the effective daily recovery capacities from equipment identified in the plan. Because of the inefficiencies of oil spill recovery devices, response plans must identify daily storage capacity equivalent to twice the effective daily recovery rate required on scene. This temporary storage capacity may be reduced if a facility owner or operator can demonstrate by waste stream analysis that the efficiencies of the oil recovery devices, ability to decant waste, or the availability of alternative temporary storage or disposal locations will reduce the overall volume of oily material storage requirement.

9.3 A facility owner or operator shall ensure that his or her planning includes the capability to arrange for disposal of recovered oil products. Specific disposal procedures will be addressed in the applicable ACP.

TABLE 1.—RESPONSE RESOURCE OPERATING CRITERIA OIL RECOVERY DEVICES

Operating environment	Significant wave height [1]	Sea State
Rivers and Canals	≤1 Foot	1
Inland	≤3 feet	2
Great Lakes	≤4 feet	2–3
Ocean	≤6 feet	3–4

BOOM

Boom property	Use			
	Rivers and canals	Inland	Great Lakes	Ocean
Significant Wave Height [1]	≤1	≤3	≤4	≤6
Sea State	1	2	2–3	3–4
Boom height—in. (draft plus freeboard)	6–18	18–42	18–42	≤42
Reserve Buoyancy to Weight Ratio	2:1	2:1	2:1	3:1 to 4:1
Total Tensile Strength—lbs.	4,500	15–20,000	15–20,000	≤20,000
Skirt Fabric Tensile Strength—lbs	200	300	300	500
Skirt Fabric Tear Strength—lbs	100	100	100	125

[1] Oil recovery devices and boom must be at least capable of operating in wave heights up to and including the values listed in Table 1 for each operating environment.

TABLE 2.—REMOVAL CAPACITY PLANNING TABLE

Spill location	Rivers and canals			Nearshore/inland Great Lakes			Offshore		
Sustainability of on-water oil recovery	3 Days			4 Days			6 Days		
Oil group	% Natural dissipation	% Recovered floating oil	% Oil on shore	% Natural dissipation	% Recovered floating oil	% Oil on shore	% Natural dissipation	% Recovered floating oil	% Oil on shore
1 Non-persistent oils	80	10	10	80	20	10	95	5	/
2 Light crudes	40	15	45	50	50	30	75	25	5
3 Medium crudes and fuels	20	15	65	30	50	50	60	40	20
4 Heavy crudes and fuels	5	20	75	10	50	70	50	40	30

TABLE 3.—EMULSIFICATION FACTORS FOR PETROLEUM OIL GROUPS

Non-Persistent Oil:	
Group I	1.0
Persistent Oil:	

TABLE 3.—EMULSIFICATION FACTORS FOR PETROLEUM OIL GROUPS—Continued

Group II	1.8
Group III	2.0
Group IV	1.4

TABLE 4.—ON WATER OIL RECOVERY RESOURCE MOBILIZATION FACTORS

Operating Area	Tier 1	Tier 2	Tier 3
Rivers & Canals	.30	.40	.60
Inland/Nearshore/Great Lakes	.15	.25	.40

TABLE 4.—ON WATER OIL RECOVERY RESOURCE MOBILIZATION FACTORS—Continued

Operating Area	Tier 1	Tier 2	Tier 3
Offshore	.10	.165	.21

Note: These mobilization factors are for total response resources mobilized, not incremental response resources.

TABLE 5.—RESPONSE CAPABILITY CAPS BY OPERATING AREA

	Tier 1	Tier 2	Tier 3
February 18, 1993:			
All except rivers and canals, Great Lakes.	10K bbls/day	20K bbls/day	40K bbls/day/
Great Lakes	5K bbls/day	10K bbls/day	20K bbls/day.
Rivers and canals	1,500 bbls/day	3,000 bbls/day	6,000 bbls/day.
February 18, 1998:			
All except rivers and canals, Great Lakes.	12.5K bbls/day	25K bbls/day	50K bbls/day.
Great Lakes	6.35K bbls/day	12.3K bbls/day	25K bbls/day.
Rivers and canals	1,875 bbls/day	3,750 bbls/day	7,500 bbls/day.
February 18, 2003:			
All except rivers and canals, Great Lakes.	TBD	TBD	TBD.
Great Lakes	TBD	TBD	TBD.
Rivers and canals	TBD	TBD	TBD.

Note: The caps show cumulative overall effective daily recovery capacity, not incremental increases.
TBD = To be determined.

[CGD 91–036, 61 FR 7933, Feb. 29, 1996, as amended by CGD 96–026, 61 FR 33666, June 28, 1996]

APPENDIX D TO PART 154—TRAINING ELEMENTS FOR OIL SPILL RESPONSE PLANS

1. General

1.1 The portion of the plan dealing with training is one of the key elements of a response plan. This concept is clearly expressed by the fact that Congress, in writing OPA 90, specifically included training as one of the sections required in a vessel or facility response plan. In reviewing submitted response plans, it has been noted that the plans often do not provide sufficient information in the training section of the plan for either the user or the reviewer of the plan. In some cases, plans simply state that the crew and others will be trained in their duties and responsibilities, with no other information being provided. In other plans, information is simply given that required parties will receive the necessary worker safety training (HAZWOPER).

1.2 The training section of the plan need not be a detailed course syllabus, but it must contain sufficient information to allow the user and reviewer (or evaluator) to have an understanding of those areas that are believed to be critical. Plans should identify key skill areas and the training that is required to ensure that the individual identified will be capable of performing the duties prescribed to them. It should also describe how the training will be delivered to the various personnel. Further, this section of the plan must work in harmony with those sections of the plan dealing with exercises, the spill management team, and the qualified individual.

1.3 The material in this appendix D is not all-inclusive and is provided for guidance only.

2. Elements To Be Addressed

2.1 To assist in the preparation of the training section of a facility response plan, some of the key elements that should be addressed are indicated in the following sections. Again, while it is not necessary that the comprehensive training program for the company be included in the response plan, it is necessary for the plan to convey the elements that define the program as appropriate.

2.2 An effective spill response training program should consider and address the following:

2.2.1 Notification requirements and procedures.

2.2.2 Communication system(s) used for the notifications.

2.2.3 Procedures to mitigate or prevent any discharge or a substantial threat of a discharge of oil resulting from failure of manifold, mechanical loading arm, or other transfer equipment or hoses, as appropriate;

2.2.3.1 Tank overfill;

2.2.3.2 Tank rupture;

2.2.3.3 Piping rupture;

2.2.3.4 Piping leak, both under pressure and not under pressure, if applicable;

2.2.3.5 Explosion or fire;

2.2.3.6 Equipment failure (e.g., pumping system failure, relief valve failure, or other general equipment relevant to operational activities associated with internal or external facility transfers).

2.2.4 Procedures for transferring responsibility for direction of response activities from facility personnel to the spill management team.

2.2.5 Familiarity with the operational capabilities of the contracted oil spill removal organizations and the procedures to notify the activate such organizations.

2.2.6 Familiarity with the contracting and ordering procedures to acquire oil spill removal organization resources.

2.2.7 Familiarity with the ACP(s).

2.2.8 Familiarity with the organizational structures that will be used to manage the response actions.

2.2.9 Responsibilities and duties of the spill management team members in accordance with designated job responsibilities.

2.2.10 Responsibilities and authority of the qualified individual as described in the facility response plan and company response organization.

2.2.11 Responsibilities of designated individuals to initiate a response and supervise response resources.

2.2.12 Actions to take, in accordance with designated job responsibilities, in the event of a transfer system leak, tank overflow, or suspected cargo tank or hull leak.

2.2.13 Information on the cargoes handled by the vessel or facility, including familiarity with—

2.2.13.1 Cargo material safety data sheets;

2.2.13.2 Chemical characteristic of the cargo;

2.2.13.3 Special handling procedures for the cargo;

2.2.13.4 Health and safety hazards associated with the cargo; and

2.2.13.5 Spill and firefighting procedures for cargo.

2.2.14 Occupational Safety and Health Administration requirements for worker health and safety (29 CFR 1910.120).

3. Further Considerations

In drafting the training section of the facility response plan, some further considerations are noted below (these points are raised simply as a reminder):

3.1 The training program should focus on training provided to facility personnel.

3.2 An organization is comprised of individuals, and a training program should be structured to recognize this fact by ensuring that training is tailored to the needs of the individuals involved in the program.

3.3 An owner or operator may identify equivalent work experience which fulfills specific training requirements.

3.4 The training program should include participation in periodic announced and unannounced exercises. This participation should approximate the actual roles and responsibilities of individual specified in the plan.

3.5 Training should be conducted periodically to reinforce the required knowledge and to ensure an adequate degree of preparedness by individuals with responsibilities under the facility response plan.

3.6 Training may be delivered via a number of different means; including classroom sessions, group discussions, video tapes, self-study workbooks, resident training courses, on-the-job training, or other means as deemed appropriate to ensure proper instruction.

3.7 New employees should complete the training program prior to being assigned job responsibilities which require participation in emergency response situations.

4. Conclusion

The information in this appendix is only intended to assist response plan preparers in reviewing the content of and in modifying the training section of their response plans. It may be more comprehensive than is needed for some facilities and not comprehensive enough for others. The Coast Guard expects that plan preparers have determined the training needs of their organizations created by the development of the response plans and the actions identified as necessary to increase the preparedness of the company and its personnel to respond to actual or threatened discharges of oil from their facilities.

[CGD 91–036, 61 FR 7938, Feb. 29, 1996]

PART 155—OIL OR HAZARDOUS MATERIAL POLLUTION PREVENTION REGULATIONS FOR VESSELS

Subpart A—General

Sec.
155.100 Applicability.
155.110 Definitions.
155.120 Equivalents.
155.130 Exemptions.
155.140 Incorporation by reference.

Subpart B—Vessel Equipment

155.200 Definitions.
155.205 Discharge removal equipment for vessels 400 feet or greater in length.
155.210 Discharge removal equipment for vessels less than 400 feet in length.
155.215 Discharge removal equipment for inland oil barges.

155.220 Discharge removal equipment for vessels carrying oil as secondary cargo.
155.225 Internal cargo transfer capability.
155.230 Emergency control systems for tank barges.
155.245 Damage stability information for inland oil barges.
155.310 Containment of oil and hazardous material cargo discharges.
155.320 Fuel oil and bulk lubricating oil discharge containment.
155.330 Bilge slops/fuel oil tank ballast water discharges on U.S. non-oceangoing ships.
155.350 Bilge slops/fuel oil tank ballast water discharges on oceangoing ships of less than 400 gross tons.
155.360 Bilge slops discharges on oceangoing ships of 400 gross tons and above but less than 10,000 gross tons, excluding ships that carry ballast water in their fuel oil tanks.
155.370 Bilge slops/fuel oil tank ballast water discharges on oceangoing ships of 10,000 gross tons and above and oceangoing ships of 400 gross tons and above that carry ballast water in their fuel oil tanks.
155.380 Oily-water separating equipment, bilge alarm, and bilge monitor approval standards.
155.400 Platform machinery space drainage on oceangoing fixed and floating drilling rigs and other platforms.
155.410 Pumping, piping and discharge requirements for U.S. non-oceangoing ships of 100 gross tons and above.
155.420 Pumping, piping and discharge requirements for oceangoing ships of 100 gross tons and above but less than 400 gross tons.
155.430 Standard discharge connections for oceangoing ships of 400 gross tons and above.
155.440 Segregation of fuel oil and water ballast on new oceangoing ships of 4,000 gross tons and above, other than oil tankers, and on new oceangoing oil tankers of 150 gross tons and above.
155.450 Placard.
155.470 Prohibited spaces.
155.480 Overfill devices.

Subpart C—Transfer Personnel, Procedures, Equipment, and Records

155.700 Designation of person in charge.
155.710 Qualifications of person in charge.
155.715 Contents of letter of designation as a person–in–charge of the transfer of fuel oil.
155.720 Transfer procedures.
155.730 Compliance with transfer procedures.
155.740 Availability of transfer procedures.
155.750 Contents of transfer procedures.
155.760 Amendment of transfer procedures.
155.770 Draining into bilges.
155.775 Maximum cargo level of oil.
155.780 Emergency shutdown.
155.785 Communications.
155.790 Deck lighting.
155.800 Transfer hose.
155.805 Closure devices.
155.810 Tank vessel security.
155.815 Tank vessel integrity.
155.820 Records.

Subpart D—Response Plans

155.1010 Purpose.
155.1015 Applicability.
155.1020 Definitions.
155.1025 Operating restrictions and interim operating authorization.
155.1026 Qualified individual and alternate qualified individual.
155.1030 General response plan requirements.
155.1035 Response plan requirements for manned vessels carrying oil as a primary cargo.
155.1040 Response plan requirements for unmanned tank barges carrying oil as a primary cargo.
155.1045 Response plan requirements for vessels carrying oil as a secondary cargo.
155.1050 Response plan development and evaluation criteria for vessels carrying groups I through IV petroleum oil as a primary cargo.
155.1052 Response plan development and evaluation criteria for vessels carrying group V petroleum oil as a primary cargo.
155.1055 Training.
155.1060 Exercises.
155.1062 Inspection and maintenance of response resources.
155.1065 Procedures for plan submission, approval, requests for acceptance of alternative planning criteria, and appeal.
155.1070 Procedures for plan review, revision, amendment, and appeal.

Subpart E—Additional Response Plan Requirements for Tankers Loading Cargo at a Facility Permitted Under the Trans-Alaska Pipeline Authorization Act

155.1110 Purpose and applicability.
155.1115 Definitions.
155.1120 Operating restrictions and interim operating authorization.
155.1125 Additional response plan requirements.
155.1130 Requirements for prepositioned response equipment.
155.1135 Response plan development and evaluation criteria.
155.1145 Submission and approval procedures.
155.1150 Plan revision and amendment procedures.

Subpart F—Response plan requirements for vessels carrying animal fats and vegetable oils as a primary cargo

155.1210 Purpose and applicability.
155.1225 Response plan submission requirements.
155.1230 Response plan development and evaluation criteria.

Subpart G—Response Plan Requirements for Vessels Carrying Other Non-Petroleum Oils as a Primary Cargo

155.2210 Purpose and applicability.
155.2225 Response plan submission requirements.
155.2230 Response plan development and evaluation criteria.

APPENDIX A TO PART 155—SPECIFICATIONS FOR SHORE CONNECTION
APPENDIX B TO PART 155—DETERMINING AND EVALUATING REQUIRED RESPONSE RESOURCES FOR VESSEL RESPONSE PLANS
APPENDIX C TO PART 155—TRAINING ELEMENTS FOR OIL SPILL RESPONSE PLANS

AUTHORITY: 33 U.S.C. 1231, 1321(j); 46 U.S.C. 3715, 3719; sec. 2, E.O. 12777, 56 FR 54757, 3 CFR, 1991 Comp., p. 351; 49 CFR 1.46, 1.46(iii).

Sections 155.110–155.130, 155.350–155.400, 155.430, 155.440, 155.470, 155.1030 (j) and (k), and 155.1065(g) also issued under 33 U.S.C. 1903(b); and §§155.1110–155.1150 also issued under 33 U.S.C. 2735.

NOTE: Additional requirements for vessels carrying oil or hazardous materials appear in 46 CFR parts 30 through 36, 150, 151, and 153.

Subpart A—General

SOURCE: CGD 75–124a, 48 FR 45714, Oct. 6, 1983, unless otherwise noted.

§ 155.100 Applicability.

(a) Subject to the exceptions provided for in paragraph (b) and (c) of this section, this part applies to each ship that:

(1) Is operated under the authority of the United States, wherever located; or

(2) Is operated under the authority of a country other than the United States while in the navigable waters of the United States, or while at a port or terminal under the jurisdiction of the United States.

(b) This part does not apply to:

(1) A warship, naval auxiliary, or other ship owned or operated by a country when engaged in non-commercial service; or

(2) Any other ship specifically excluded by MARPOL 73/78.

(c) Section 155.480 applies to each tank vessel with a cargo capacity of 1,000 or more cubic meters (approximately 6,290 barrels), loading oil or oil reside as cargo that is operated under the authority of the United States, wherever located, or operated under the authority of a country other than the United States while in the navigable waters of the United States, or while at a port or terminal under the jurisdiction of the United States.

[CGD 75–124a, 48 FR 45714, Oct. 6, 1983, as amended by CGD 90–071a, 62 FR 48773, Sept. 17, 1997]

§ 155.110 Definitions.

Except as specifically stated in a section, the definitions in part 151 of this chapter, except for the word ''oil'', and in part 154 of this chapter, apply to this part.

[CGD 90–071a, 59 FR 53290, Oct. 21, 1994]

§ 155.120 Equivalents.

(a) For ships required to be surveyed under § 151.17 of this chapter, the Commandant may, upon receipt of a written request, allow any fitting, material, appliance or apparatus to be fitted in a ship as an alternative to that required by both MARPOL 73/78 and subpart B of this part if such fitting, material, appliance, or apparatus is at least as effective as that required by subpart B. Substitution of operational methods to control the discharge of oil in place of those design and construction features prescribed by MARPOL 73/78 that are also prescribed by subpart B of this part is not allowed.

(b) Any equivalent to a feature prescribed by MARPOL 73/78 that is authorized for a ship having an IOPP Certificate is noted on that Certificate.

(c) For tank vessels required to have overfill devices installed under parts 155 and 156 of this chapter, the Commandant may, upon receipt of a written request, allow any fitting, material, appliance, or apparatus to be fitted in a tank vessel as an alternative to the required overfill device(s) that are specified in these parts if the proposed alternative device is at least as

effective as that required in the regulations.

[CGD 75–124a, 48 FR 45714, Oct. 6, 1983, as amended by CGD 90–071a, 59 FR 53290, Oct. 21, 1994]

§ 155.130 Exemptions.

(a) The Commandant grants an exemption or partial exemption from compliance with any requirement in this part if:

(1) A ship operator submits a written request for an exemption via the COTP or OCMI thirty (30) days before operations under the exemption are proposed unless the COTP or OCMI authorizes a shorter time; and

(2) It is determined from the request that:

(i) Compliance with a specific requirement is economically or physically impractical;

(ii) No alternative procedures, methods, or equipment standards exist that would provide an equivalent level of protection from pollution; and

(iii) The likelihood of discharges occurring as a result of the exemption is minimal.

(b) If requested, the applicant must submit any appropriate information, including an environmental and economic assessment of the effects of and the reasons for the exemption and proposed procedures, methods, or equipment standards.

(c) The exemption may specify the procedures, methods, or equipment standards that will apply.

(d) An oceangoing ship is not given an exemption from the requirements of subpart B of this part unless the ship is a hydrofoil, air cushion vehicle or other new type of ship (near-surface craft, submarine craft, etc.) whose constructional features are such as to render the application of any of the provisions of subpart B relating to construction and equipment unreasonable or impractical. The construction and equipment of the ship must provide protection equivalent to that afforded by subpart B of this part against pollution, having regard to the service for which the ship is intended.

(e) An exemption is granted or denied in writing. The decision of the Commandant is a final agency action.

[CGD 75–124a, 48 FR 45714, Oct. 6, 1983, as amended by CGD 86–034, 55 FR 36254, Sept. 4, 1990]

§ 155.140 Incorporation by reference.

(a) Certain material is incorporated by reference into this part with the approval of the Director of the Federal Register under 5 U.S.C. 552(a) and 1 CFR part 51. To enforce any edition other than that specified in paragraph (b) of this section, the Coast Guard must publish notice of change in the FEDERAL REGISTER and the material must be available to the public. All approved material is available for inspection at the Office of the Federal Register, 800 North Capitol Street, NW., suite 700, Washington, DC, and at the U.S. Coast Guard Office of Compliance (G–MOC), 2100 Second Street SW., Washington, 20593–0001, and is available from the sources indicated in paragraph (b) of this section.

(b) The material approved for incorporation by reference in this part, and the sections affected, are as follows:

American National Standards Institute, Inc. (ANSI) 11 West 42nd Street, New York, NY 10036

ANSI A10.14—Requirements for Safety Belts, Harnesses, Lanyards and Lifelines for Construction and Demolition Use, 1991—155.230

American Society for Testing and Materials (ASTM) 1916 Race Street, Philadelphia, PA 19103.

ASTM F 631–80 (Reapproved 1985), Standard Method for Testing Full Scale Advancing Spill Removal Devices.	Appendix B.
ASTM F 715–81 (Reapproved 1986), Standard Methods of Testing Spill Control Barrier Membrane Materials.	Appendix B.
ASTM F 808–83 (1988), Standard Guide for Collecting Skimmer Performance Data in Uncontrolled Environments.	Appendix B.
ASTM F 989–86, Standard Test Methods for Spill Control Barrier Tension Members.	Appendix B.

International Maritime Organization (IMO)

Publications Section, 4 Albert Embankment, London SE1 75R, United Kingdom, Telex 23588..	
Resolution A.535(13), Recommendations on Emergency Towing Requirements for Tankers, November 17, 1983.	155.235
Resolution MSC.35(63), Adoption of Guidelines for Emergency Towing Arrangement on Tankers, May 20, 1994— 155.235.	

Oil Companies International Marine Forum (OCIMF) 15th Floor, 96 Victoria Street, London SW1E 5JW England.

Ship to Ship Transfer Guide (Petroleum), Second Edition, 1988 ..	155.1035

[CGD 91–034, 58 FR 7424, Feb. 5, 1993, as amended by CGD 90–068, 58 FR 67995, Dec. 22, 1993; CGD 96–026, 61 FR 33666, June 28, 1996; CGD 95–028, 62 FR 51194, Sept. 30, 1997; USCG 1998–4443, 63 FR 71763, Dec. 30, 1998]

Subpart B—Vessel Equipment

SOURCE: CGD 75–124a, 48 FR 45715, Oct. 6, 1983, unless otherwise noted.

§ 155.200 Definitions.

As used in this subpart:

Inland oil barge means a tank barge carrying oil in bulk as cargo certificated by the Coast Guard under 46 CFR chapter I, subchapter D for river or canal service or lakes, bays, and sounds service.

On-deck spill means a discharge of oil on the deck of a vessel during loading, unloading, transfer, or other shipboard operations. An on-deck spill could result from a leaking fitting, an overfill, a bad connection, or similar operational mishap. The term *on-deck spill* is used to differentiate these operational discharges from those caused by collision or grounding where the hull is punctured and a tank is ruptured, resulting in an uncontrolled discharge of oil into the marine environment.

Offshore oil barge means a tank barge carrying oil in bulk as cargo, including dual-mode integrated tug-barges, certificated by the Coast Guard under 46 CFR chapter I, subchapter D, for navigation in waters outside the Boundary Lines, as defined in 46 CFR part 7, in any ocean or the Gulf of Mexico; any tank barge in Great Lakes service; or any foreign flag tank barge.

Oil tanker means a self-propelled vessel carrying oil in bulk as cargo, including integrated tug-barges designed for push-mode operation.

Vessel carrying oil as secondary cargo means a vessel carrying oil pursuant to a permit issued under 46 CFR 30.01–5, 46 CFR 70.05–30, or 46 CFR 90.05–35 or pursuant to an International Oil Pollution Prevention (IOPP) or Noxious Liquid Substance (NLS) certificate required by §§ 151.33 or 151.35 of this chapter; or any uninspected vessel that carries oil in bulk as cargo.

[CGD 90–068, 58 FR 67996, Dec. 22, 1993]

§ 155.205 Discharge removal equipment for vessels 400 feet or greater in length.

(a) Oil tankers and offshore oil barges with an overall length of 400 feet or more must carry appropriate equipment and supplies for the containment and removal of on-deck oil cargo spills of at least 12 barrels.

(b) The equipment and supplies must include—

(1) Sorbents;

(2) Non-sparking hand scoops, shovels, and buckets;

(3) Containers suitable for holding recovered waste;

(4) Emulsifiers for deck cleaning;

(5) Protective clothing;

(6) A minimum of one non-sparking portable pump with hoses; and

(7) Scupper plugs.

(c) During cargo transfer operations, the equipment and supplies must remain ready for immediate use.

[CGD 90–068, 58 FR 67996, Dec. 22, 1993, as amended by USCG–1998–3799, 63 FR 35531, June 30, 1998]

§ 155.210 Discharge removal equipment for vessels less than 400 feet in length.

(a) Oil tankers and offshore oil barges with an overall length of less than 400 feet must carry appropriate equipment and supplies for the containment and removal of on-deck oil spills of at least 7 barrels.

(b) The equipment and supplies must include—

(1) Sorbents;

(2) Non-sparking hand scoops, shovels, and buckets;

(3) Containers suitable for holding recovered waste;

(4) Emulsifiers for deck cleaning;

(5) Protective clothing;

(6) A minimum of one non-sparking portable pump with hoses; and

(7) Scupper plugs.

(c) During cargo transfer operations, the equipment and supplies must remain ready for immediate use.

[CGD 90–068, 58 FR 67996, Dec. 22, 1993, as amended by USCG–1998–3799, 63 FR 35531, June 30, 1998]

§ 155.215 Discharge removal equipment for inland oil barges.

(a) During cargo transfer operations, inland oil barges must have appropriate equipment and supplies ready for immediate use to control and remove on-deck oil cargo spills of at least one barrel.

(b) The equipment and supplies must include—

(1) Sorbents;

(2) Non-sparking hand scoops, shovels, and buckets;

(3) Containers suitable for holding recovered waste;

(4) Emulsifiers for deck cleaning; and

(5) Protective clothing.

(c) The oil barge owner or operator may rely on equipment available at the transfer facility receiving from or discharging to the barge, provided the barge owner or operator has prearranged for the use of the equipment by contract or other means approved by the Coast Guard.

[CGD 90–068, 58 FR 67996, Dec. 22, 1993, as amended by USCG–1998–3799, 63 FR 35531, June 30, 1998]

§ 155.220 Discharge removal equipment for vessels carrying oil as secondary cargo.

(a) Vessels carrying oil as secondary cargo must carry appropriate equipment and supplies for the containment and removal of on-deck oil cargo spills of at least one-half barrel.

(b) The equipment and supplies must include—

(1) Sorbents;

(2) Non-sparking hand scoops, shovels, and buckets;

(3) Containers suitable for holding recovered waste;

(4) Emulsifiers for deck cleaning; and

(5) Protective clothing

(c) The equipment and supplies must be ready for immediate use during cargo transfer operations.

[CGD 90–068, 58 FR 67996, Dec. 22, 1993, as amended by USCG–1998–3799, 63 FR 35531, June 30, 1998]

§ 155.225 Internal cargo transfer capability.

Oil tankers and offshore oil barges must carry suitable hoses and reducers for internal transfer of cargo to tanks or other spaces within the cargo block, unless the vessel's installed cargo piping system is capable of performing this function.

[CGD 90–068, 58 FR 67996, Dec. 22, 1993, as amended by USCG–1998–3799, 63 FR 35531, June 30, 1998]

§ 155.230 Emergency control systems for tank barges.

(a) *Application*. This section applies to tank barges and vessels towing them on the following waters:

(1) On the U.S. territorial sea [as defined in Presidential Proclamation 5928 of December 27, 1988, it is the belt of waters 12 nautical miles wide—the shoreward boundary is the territorial sea baseline].

(2) In Great Lakes service.

(3) On Long Island Sound. For the purposes of this section, Long Island Sound includes the waters between the baseline of the territorial sea on the eastern end (from Watch Hill Point, Rhode Island, to Montauk Point, Long Island), and a line drawn north and south from Premium Point, New York (approximately 40°54.5′N, 73°45.5′W), to Hewlett Point, Long Island (approximately 40°50.5′N, 73°45.3′W), on the western end.

(4) In the Strait of Juan de Fuca.

(5) On the waters of Admiralty Inlet north of Marrowstone Point (approximately 48°06′N, 122°41′W). This section (§ 155.230) does not apply to foreign vessels engaged in innocent passage (i.e., not entering or leaving a U.S. port).

(b) *Safety program*. If you are the owner or operator of a single-hull tank barge or of a vessel towing it, you must adequately man and equip each vessel

of this kind so that its crew can anchor the barge by employing *Measure 1* in paragraph (b)(1) of this section. Moreover, the crew and vessel together must be capable of arresting or retrieving the barge by employing either *Measure 2* or *Measure 3* as described in paragraphs (b)(2) and (3), respectively. If you are the owner or operator of a double-hull tank barge, you must equip it and train its crew, or if it is unmanned the crew of the vessel towing it, so that crew can retrieve the barge by employing *Measure 2* in paragraph (b)(2).

(1) *Measure 1.* Each single-hull tank barge, whether manned or unmanned, must be equipped with an operable anchoring system that conforms to 46 CFR 32.15–15. Because the anchoring system will also serve as an emergency control system, the owner or operator must ensure that the following criteria are met:

(i) *Operation and performance.* When the barge is underway—

(A) The anchoring system is ready for immediate use;

(B) One person, along with one other crewmember to assist if needed, can operate the system and deploy the anchor;

(C) While preparing to deploy the anchor, the operator of the system must confer with the master of the towing vessel regarding appropriate length of cable or chain to use; and

(D) Each operator of the system must wear a safety belt or harness secured by a lanyard to a lifeline, drop line, or fixed structure such as a welded padeye. Each safety belt, harness, lanyard, lifeline, and drop line must meet the specifications of ANSI A10.14.

(ii) *Maintenance and inspections.* Each anchor, cable, chain, and hawser must be inspected at the time of class survey or inspection for certification. The inspection must cover the features listed under *operation and performance* in paragraph (b)(1)(i) of this section.

(iii) *Training.* On each manned barge, every crewmember must be thoroughly familiar with the operation of the anchoring system. On each vessel towing an unmanned barge, every deck crewmember must be thoroughly familiar with the operation of the anchoring system installed on the barge.

(2) *Measure 2.* Each owner or operator of a barge or towing vessel described in paragraph (a) of this section employing an emergency retrieval system to regain control of a barge must ensure that the following criteria are met:

(i) *Design.* The system must use an emergency towline with *at least* the same pulling strength as required of the primary towline. The emergency towline must be available on either the barge or the vessel towing it. The towing vessel must have on board equipment to regain control of the barge and continue towing (using the emergency towline), without having to place personnel on board the barge.

(ii) *Operation and performance.* The system must use a stowage arrangement that ensures the readiness of the emergency towline and the availability of all retrieval equipment for immediate use in an emergency throughout the voyage.

(iii) *Maintenance and inspection.* The system must be inspected annually by the owner or operator. This inspection can take place at the time of class survey or during an inspection for certification. It must test the availability of the retrieval system and verify the maintenance of the emergency towline.

(iv) *Training.* Retrieval drills must be conducted within three months after the master or mate responsible for supervising barge retrieval begins employment on a vessel that tows tank barges, and at least annually thereafter. Each drill must—

(A) Include actual operation of a retrieval system to regain control of a barge; and

(B) Be conducted at the master's discretion, under the supervision of the master or mate responsible for barge retrieval, and in open waters free from navigational hazards so as to minimize risk to personnel and the environment.

(3) *Measure 3.* Each owner or operator of a barge or towing vessel described in paragraph (a) of this section may invoke this paragraph as a substitute for Measure 2 in paragraph (b)(2). First, you must ensure that your alternative measure, system, or combination of measures used to arrest or retrieve a barge is approved by the Commandant (G–MSE). To be approved, it must provide protection against grounding of

the tank vessel comparable to that provided by the systems and measures described in paragraph (b)(1) or (2) of this section.

[USCG 1998–4443, 63 FR 71763, Dec. 30, 1998]

EFFECTIVE DATE NOTE: By USCG 1998–4443, 63 FR 71763, Dec. 30, 1998, § 155.230 was revised, effective Mar. 30, 1999, except for paragraph (b)(1) which is effective Dec. 11, 2000.

§ 155.245 Damage stability information for inland oil barges.

(a) Owners or operators of inland oil barges shall ensure that the vessel plans necessary to perform salvage, stability, and residual hull strength assessments are maintained at a shore-based location.

(b) Access to the plans must be available 24 hours a day.

[CGD 90–068, 58 FR 67997, Dec. 22, 1993, as amended by USCG–1998–3799, 63 FR 35531, June 30, 1998]

§ 155.310 Containment of oil and hazardous material cargo discharges.

(a) A tank vessel with a capacity of 250 or more barrels that is carrying oil or hazardous material as cargo must have—

(1) Under or around each loading manifold and each transfer connection point, a fixed container or enclosed deck area that, in all conditions of ship list or trim encountered during the loading operation, has a capacity of at least:

(i) One half barrel if it serves one or more hoses with an inside diameter of 2 inches or less, or one or more loading arms with a nominal pipe size diameter of 2 inches or less;

(ii) One barrel if it serves one or more hoses with an inside diameter of more than 2 inches but less than 4 inches, or one or more loading arms with a nominal pipe size diameter of more than 2 inches but less than 4 inches;

(iii) Two barrels if it serves one or more hoses with an inside diameter of 4 inches or more, but less than 6 inches, or one or more loading arms with a nominal pipe size diameter of 4 inches or more, but less than 6 inches;

(iv) Three barrels if it serves one or more hoses with an inside diameter of 6 inches or more, but less than 12 inches, or one or more loading arms with a nominal pipe size diameter of 6 inches or more, but less than 12 inches; or

(v) Four barrels if it serves one or more hoses with an inside diameter of 12 inches or more, or one or more loading arms with a nominal pipe size diameter of 12 inches or more;

(2) A means of draining or removing discharged oil or hazardous material from each container or enclosed deck area without discharging the oil or hazardous material into the water; and

(3) A mechanical means of closing each drain and scupper in the container or enclosed deck area required by this section.

(b) An offshore tank barge with a cargo capacity of 250 or more barrels that is carrying hazardous material as cargo and an inland tank barge with the capacity of 250 or more barrels that is carrying oil or a hazardous material as cargo must meet paragraph (a) of this section or be equipped with—

(1) A coaming, at least 4 inches high but not more than 8 inches high, enclosing the immediate area of the cargo hatches, loading manifolds, and transfer connections, that has a capacity, in all conditions of vessel list and trim to be encountered during the loading operation, of at least one-half barrel per hatch, manifold, and connection within the enclosed area;

(2) A fixed or portable container under each loading manifold and each transfer connection within the coaming, that holds at least one-half barrel;

(3) A mechanical means of closing each drain and scupper within the coaming; and

(4) A means of draining or removing discharged oil or hazardous material from the fixed or portable container and from within the coamings without discharging the oil or hazardous material into the water.

(c) All oil tankers and offshore oil barges with a cargo capacity of 250 or more barrels must have peripheral coamings, including port and starboard coamings and forward and aft athwartships coamings, completely enclosing the cargo deck area, cargo hatches, manifolds, transfer connections, and any other openings where cargo may overflow or leak.

(1) Coamings must be at least 4 inches high except in the aft corners.

(2) In the aft corners (port and starboard) of a vessel, the coamings must be at least 8 inches high and extend—

(i) Forward at least 14 feet from each corner; and

(ii) Inboard at least 8 feet from each corner.

(3) Each area enclosed by the coaming required under this paragraph must have—

(i) A means of draining or removing oil from the enclosed deck area without discharging oil into the water; and

(ii) A mechanical means of closing each drain and scupper in the enclosed deck-area.

(4) For a tankship, as defined in 46 CFR 30.10–67, the coaming or other barrier required in 46 CFR 32.56–15 may serve as the aft athwartships coaming if the tankship is otherwise in compliance with the requirements of this section.

(d) In addition to the requirements of paragraphs (a) and (b) of this section, an offshore oil barge with a cargo capacity of 250 or more barrels must have—

(1) A fixed or portable container that holds at least one-half barrel under each oil loading manifold and each oil transfer connection within the coaming;

(2) A mechanical means of closing each drain and scupper within the coaming; and

(3) A means of draining or removing discharged oil from the fixed or portable container and from within the coaming without discharging the oil into the water.

[CGD 75–124a, 48 FR 45715, Oct. 6, 1983, as amended by CGD 86–034, 55 FR 36254, Sept. 4, 1990; CGD 90–068, 58 FR 67997, Dec. 22, 1993; USCG–1998–3799, 63 FR 35531, June 30, 1998]

§ 155.320 Fuel oil and bulk lubricating oil discharge containment.

(a) A ship of 300 gross tons or more constructed after June 30, 1974 must have a fixed container or enclosed deck area under or around each fuel oil or bulk lubricating oil tank vent, overflow, and fill pipe, that:

(1) For a ship of 300 or more but less than 1600 gross tons has a capacity of at least one-half barrel; and

(2) For a ship of 1600 or more gross tons has a capacity of one barrel.

(b) A ship of 100 gross tons or more constructed before July 1, 1974, and a ship of 100 or more but less than 300 gross tons constructed after June 30, 1974 must:

(1) Meet paragraph (a)(1) of this section; or

(2) Equip each fuel oil or bulk lubricating oil tank vent, overflow, and fill pipe during oil transfer operations with a portable container of at least a 5 U.S. gallon capacity; or

(3) If the ship has a fill fitting for which containment is impractical, use an automatic back pressure shut-off nozzle.

(c) This section does not apply to a fixed or floating drilling rig or other platform.

§ 155.330 Bilge slops/fuel oil tank ballast water discharges on U.S. non-oceangoing ships.

(a) No person may operate a U.S. non-oceangoing ship in the navigable waters of the United States, unless it has the capacity to retain on board all oily mixtures and is equipped to discharge these oily mixtures to a reception facility.

(b) A U.S. non-oceangoing ship may retain all oily mixtures on board in the ship's bilges. An oily residue (sludge) tank is not required.

(c) This section does not apply to a fixed or floating drilling rig or other platform.

§ 155.350 Bilge slops/fuel oil tank ballast water discharges on oceangoing ships of less than 400 gross tons.

(a) No person may operate an oceangoing ship of less than 400 gross tons, unless it either:

(1) Has the capacity to retain on board all oily mixtures and is equipped to discharge these oily mixtures to a reception facility; or

(2) Has approved oily-water separating equipment for the processing of oily bilge slops or oily fuel oil tank ballast and discharges into the sea in accordance with § 151.10.

(b) An oceangoing ship of less than 400 gross tons may retain all oily mixtures on board in the ship's bilges. An

oily residue (sludge) tank is not required.

(c) This section does not apply to a barge that is not equipped with an installed bilge pumping system for discharge into the sea.

(d) This section does not apply to a fixed or floating drilling rig or other platform.

[CGD 75–124a, 48 FR 45715, Oct. 6, 1983, as amended by CGD 88–002, 54 FR 18407, Apr. 28, 1989; CGD 97–023, 62 FR 33364, June 19, 1997; USCG–1998–3799, 63 FR 35531, June 30, 1998]

§ 155.360 Bilge slops discharges on oceangoing ships of 400 gross tons and above but less than 10,000 gross tons, excluding ships that carry ballast water in their fuel oil tanks.

(a) No person may operate an oceangoing ship of 400 gross tons and above but less than 10,000 gross tons, excluding a ship that carries ballast water in its fuel oil tanks, unless it is fitted with approved 100 parts per million (ppm) oily-water separating equipment for the processing of oily bilge slops or oily fuel oil tank ballast.

(b) No person may operate a ship under this section unless it is fitted with a tank or tanks of adequate capacity to receive the oily residues (sludges) that cannot be dealt with otherwise.

(1) In new ships such tanks shall be designed and constructed to facilitate cleaning and the discharge of the oily residues to reception facilities. Existing ships shall comply with this requirement as far as reasonable and practicable.

(2) Tanks used for oily wastes on ships certificated under 46 CFR Chapter I shall meet the requirements of 46 CFR 56.50–50(h) for isolation between oil and bilge systems.

(c) No person may operate a ship unless it is equipped with a pipeline to discharge oily mixtures to a reception facility.

(d) This section does not apply to a barge that is not equipped with an installed bilge pumping system for discharge into the sea.

(e) This section does not apply to a fixed or floating drilling rig or other platform.

[CGD 75–124a, 48 FR 45715, Oct. 6, 1983, as amended by USCG–1998–3799, 63 FR 35531, June 30, 1998]

§ 155.370 Bilge slops/fuel oil tank ballast water discharges on oceangoing ships of 10,000 gross tons and above and oceangoing ships of 400 gross tons and above that carry ballast water in their fuel oil tanks.

(a) No person may operate an oceangoing ship of 10,000 gross tons and above or any oceangoing ship of 400 gross tons and above that carries ballast water in its fuel oil tanks unless it has either:

(1) Approved 100 ppm oily-water separating equipment for the processing of oily bilge slops or oily fuel oil tank ballast and an approved bilge monitor; or

(2) Approved 15 ppm oily-water separating equipment for the processing of oily bilge slops or oily fuel oil tank ballast and an approved bilge alarm.

(b) No person may operate a ship under this section unless it is fitted with a tank or tanks of adequate capacity to receive the oily residues (sludges) that cannot be dealt with otherwise.

(1) In new ships such tanks shall be designed and constructed to facilitate cleaning and the discharge of the oily residues to reception facilities. Existing ships shall comply with this requirement as far as reasonable and practicable.

(2) Tanks used for oily wastes on ships certificated under 46 CFR Chapter I shall meet the requirements of 46 CFR 56.50–50(h) for isolation between oil and bilge systems.

(c) No person may operate a ship under this section unless it is equipped with a pipeline to discharge oily mixtures to a reception facility.

(d) The master or other person having charge of a ship equipped in accordance with paragraph (a)(1) of this section shall ensure that the bilge monitor continuous record is maintained on board for not less than three years.

(e) This section does not apply to a barge that is not equipped with an installed bilge pumping system for discharge into the sea.

(f) This section does not apply to a fixed or floating drilling rig or other platform.

(Approved by the Office of Management and Budget under control number 2115–0025)

[CGD 75–124a, 48 FR 45715, Oct. 6, 1983, as amended by USCG–1998–3799, 63 FR 35531, June 30, 1998]

§ 155.380 Oily-water separating equipment, bilge alarm, and bilge monitor approval standards.

(a) On U.S. inspected ships, oily-water separating equipment, bilge alarms, and bilge monitors must be approved under 46 CFR 162.050.

(b) On U.S. uninspected ships and foreign ships, oily-water separating equipment, bilge alarms, and bilge monitors must be approved under 46 CFR 162.050 or be listed in the current International Maritime Organization (IMO) Marine Environment Protection Committee (MEPC) Circular summary of MARPOL 73/78 approved equipment.

(c) A ship that is required to have 100 parts per million (ppm) oily-water separating equipment may have 15 parts per million (ppm) oily-water separating equipment installed in its place.

(d) A ship that is required to have a bilge alarm may have a bilge monitor installed in its place.

§ 155.400 Platform machinery space drainage on oceangoing fixed and floating drilling rigs and other platforms.

(a) No person may operate an oceangoing fixed or floating drilling rig or other platform unless it either—

(1) Complies with the oily-water separating equipment requirements of a valid National Pollutant Discharge Elimination System (NPDES) permit issued in accordance with section 402 of the Clean Water Act and 40 CFR Chapter I;

(2) Complies with the oily-water separating equipment requirements for oceangoing ships of 400 gross tons and above as set forth in either § 155.360 or § 155.370; or

(3) Is not equipped with an installed bilge pumping system for discharge of oily mixtures from platform machinery spaces into the sea and has the capacity to retain on board all of these oily mixtures and is equipped to discharge these mixtures for transport to a reception facility.

(b) When an oceangoing fixed or floating drilling rig or other platform is in a special area, is not proceeding en route, or is within 12 nautical miles of the nearest land; it must either—

(1) Have the capacity to retain on board all machinery space oily mixtures from platform machinery space drainage and be equipped to discharge these mixtures for transport to a reception facility; or

(2) Discharge in accordance with § 151.10 (b)(3), (b)(4), and (b)(5) of this chapter, provided the drilling rig or platform is not within a special area.

(c) Paragraph (b) of this section does not apply to a fixed or floating drilling rig or other platform that is operating under an NPDES permit.

[CGD 75–124a, 48 FR 45715, Oct. 6, 1983, as amended by CGD 88–002, 54 FR 18407, Apr. 28, 1989; CGD 94–056, 60 FR 43378, Aug. 21, 1995; USCG–1998–3799, 63 FR 35531, June 30, 1998]

§ 155.410 Pumping, piping and discharge requirements for non-oceangoing ships of 100 gross tons and above.

(a) No person may operate a non-oceangoing ship of 100 gross tons and above that is fitted with main or auxiliary machinery spaces in the navigable waters of the United States unless:

(1) The ship has at least one pump installed to discharge oily mixtures through a fixed piping system to a reception facility;

(2) The piping system required by this section has at least one outlet that is accessible from the weather deck;

(3) Each outlet required by this section has a shore connection that meets the specifications in § 155.430 or the ship has at least one portable adapter that meets the specifications in § 155.430 and fits the required outlets; and

(4) The ship has a stop valve for each outlet required by this section.

(b) Paragraph (a) of this section does not apply to a ship that has approved oily-water separating equipment for

the processing of oily bilge slops or oily fuel oil tank ballast.

(c) This section does not apply to a fixed or floating drilling rig or other platform.

§ 155.420 Pumping, piping and discharge requirements for oceangoing ships of 100 gross tons and above but less than 400 gross tons.

(a) No person may operate an oceangoing ship of 100 gross tons and above but less than 400 gross tons that is fitted with main or auxiliary machinery spaces unless:

(1) The ship has at least one pump installed to discharge oily mixtures through a fixed piping system to a reception facility;

(2) The piping system required by this section has at least one outlet accessible from the weather deck;

(3) The outlet required by this section has a shore connection that meets the specifications in § 155.430, or the ship has at least one adapter that meets the specifications in § 155.430 and fits the required outlets;

(4) The ship has a means on the weather deck near the discharge outlet to stop each pump that is used to discharge oily wastes; and

(5) The ship has a stop valve installed for each outlet required by this section.

(b) Paragraph (a) of this section does not apply to a ship that has approved oily-water separating equipment for the processing of oily bilge slops or oily fuel oil tank ballast.

(c) This section does not apply to a fixed or floating drilling rig or other platform.

§ 155.430 Standard discharge connections for oceangoing ships of 400 gross tons and above.

(a) An oceangoing ship of 400 gross tons and above must be fitted with a standard discharge shore connection, for the discharge to reception facilities, of oily wastes from machinery space bilges or fuel oil tank ballast water. The discharge connection must be of the following dimensions:

(1) Outside diameter=215 millimeters (mm).

(2) Inner diameter=according to pipe outside diameter.

(3) Bolt circle diameter=183 mm.

(4) Slots in flange=6 holes 22 mm in diameter equidistantly placed on a bolt circle of the above diameter, slotted to the flange periphery. The slot width to be 22 mm.

(5) Flange thickness=20 mm.

(6) Bolts and nuts, quantity and number=6 each of 20 mm in diameter and of suitable length.

(b) A portable adapter that meets the specifications of paragraph (a) of this section and that fits the discharge shore connection, for the discharge of oily wastes from machinery space bilges may be substituted for the standard discharge connection requirement of paragraph (a) of this section.

(c) The flange must be designed to accept pipes up to a maximum internal diameter of 125 mm and shall be of steel or other equivalent material having a flat face. This flange, together with a gasket of oilproof material, must be suitable for a service pressure of 6 kilograms/square centimeters (kg/cm^2).

§ 155.440 Segregation of fuel oil and water ballast on new oceangoing ships of 4,000 gross tons and above, other than oil tankers, and on new oceangoing oil tankers of 150 gross tons and above.

(a) Except as provided for in paragraph (b) of this section, in new oceangoing ships of 4,000 gross tons and above other than oil tankers, and in new oceangoing oil tankers of 150 gross tons and above, ballast water must not be carried in any fuel oil tank.

(b) Where abnormal conditions or the need to carry large quantities of fuel oil render it necessary to carry ballast water that is not a clean ballast in any fuel oil tank, that ballast water must be discharged to reception facilities or into the sea in compliance with Part 151 of this chapter using the equipment specified in § 155.370, and an entry shall be made in the Oil Record Book to this effect.

(Approved by the Office of Management and Budget under control number 2115–0025)

§ 155.450 Placard.

(a) A ship, except a ship of less than 26 feet in length, must have a placard of at least 5 by 8 inches, made of durable material fixed in a conspicuous

place in each machinery space, or at the bilge and ballast pump control station, stating the following:

DISCHARGE OF OIL PROHIBITED

The Federal Water Pollution Control Act prohibits the discharge of oil or oily waste into or upon the navigable waters of the United States, or the waters of the contiguous zone, or which may affect natural resources belonging to, appertaining to, or under the exclusive management authority of the United States, if such discharge causes a film or discoloration of the surface of the water or causes a sludge or emulsion beneath the surface of the water. Violators are subject to substantial civil penalties and/or criminal sanctions including fines and imprisonment.

(b) Existing stocks of placards may be used for the life of the placard.

(c) The placard required by paragraph (a) or (b) of this section must be printed in the language or languages understood by the crew.

[CGD 75–124a, 48 FR 45715, Oct. 6, 1983, as amended by CGD 93–054, 58 FR 62262, Nov. 26, 1993]

§ 155.470 Prohibited spaces.

(a) In a ship of 400 gross tons and above, for which the building contract is placed after January 1, 1982 or, in the absence of a building contract, the keel of which is laid or which is at a similar stage of construction after July 1, 1982, oil or hazardous material must not be carried in a forepeak tank or a tank forward of the collision bulkhead.

(b) A self-propelled ship of 300 gross tons and above, to which paragraph (a) of this section does not apply, may not carry bulk oil or hazardous material in any space forward of a collision bulkhead except:

(1) For a ship constructed after June 30, 1974, fuel oil for use on the ship may be carried in tanks forward of a collision bulkhead, if such tanks are at least 24 inches inboard of the hull structure; or

(2) For a ship constructed before July 1, 1974, fuel oil for use on the ship may be carried in tanks forward of a collision bulkhead, if such tanks were designated, installed, or constructed for fuel oil carriage before July 1, 1974.

[CGD 75–124a, 48 FR 45715, Oct. 6, 1983, as amended by CGD 86–034, 55 FR 36254, Sept. 4, 1990]

§ 155.480 Overfill devices.

(a) For the purposes of this section, ''oil'' has the same definition as provided in § 151.05 of this chapter.

(b) Each tank vessel with a cargo capacity of 1,000 or more cubic meters (approximately 6,290 barrels), loading oil or oil residue as cargo, must have one overfill device that is permanently installed on each cargo tank and meets the requirements of this section.

(1) On a tankship, each cargo tank must be equipped with an overfill device (including an independent audible alarm or visible indicator for that tank) that meets the requirements for tank overfill alarms under 46 CFR 39.20–7(b)(2) and (3), and (d)(1) through (d)(4).

(2) On a tank barge, each cargo tank must be equipped with an overfill device that—

(i) Meets the requirements of 46 CFR 39.20–7(b)(2) and (b)(3) and (d)(1) through (d)(4), and 46 CFR 39.20–9(a)(1) through (a)(3);

(ii) Is an installed automatic shutdown system that meets the requirements of 46 CFR 39.20–9(b); or

(iii) Is an installed high level indicating device that meets the requirements of 46 CFR 39.20–3(b)(1), (b)(2), and (b)(3).

(c) Each cargo tank of a U.S. flag tank vessel must have installed on it an overfill device meeting the requirements of this section at the next scheduled cargo tank internal examination performed on the vessel under 46 CFR 31.10–21.

(d) Each cargo tank of a foreign flag tank vessel must have installed on it an overfill device—

(1) At the first survey that includes dry docking, as required by the vessel's flag administration, to meet the International Convention for the Safety of Life at Sea (SOLAS), 1974, as amended, or the International Load Line Convention of 1966; or

(2) At the first cargo tank internal examination performed on the tank vessel under 46 CFR 31.10–21.

(e) This section does not apply to a tank vessel that does not meet the double hull requirements of § 157.10d of this chapter and, under 46 U.S.C. 3703a(c),

may not operate in the navigable waters or Exclusive Economic Zone of the United States after January 1, 2000.

(f) This section does not apply to tank vessels that carry asphalt, animal fat, or vegetable oil as their only cargo.

[CGD 90–071a, 59 FR 53290, Oct. 21, 1994, as amended by CGD 90–071a, 62 FR 48773, Sept. 17, 1997]

Subpart C—Transfer Personnel, Procedures, Equipment, and Records

§ 155.700 Designation of person in charge.

Each operator or agent of a vessel with a capacity of 250 or more barrels of fuel oil, cargo oil, hazardous material, or liquefied gas as regulated in Table 4 of 46 CFR part 154, or each person who arranges for and hires a person to be in charge of a transfer of fuel oil, of a transfer of liquid cargo in bulk, or of cargo-tank cleaning, shall designate, either by name or by position in the crew, the person in charge (PIC) of each transfer to or from the vessel and of each tank-cleaning.

[CGD 79–116, 62 FR 25126, May 8, 1997]

§ 155.710 Qualifications of person in charge.

(a) On each tankship required to be documented under the laws of the United States, the operator or agent of the vessel, or the person who arranges and hires a person to be in charge either of a transfer of liquid cargo in bulk or of cargo-tank cleaning, shall verify to his or her satisfaction that each person designated as a PIC—

(1) Has sufficient training and experience with the relevant characteristics of the vessel on which he or she is engaged—including the cargo for transfer, the cargo-containment system, the cargo system (including transfer procedures, and shipboard-emergency equipment and procedures), the control and monitoring systems, the procedures for reporting pollution incidents, and, if installed, the Crude-Oil Washing (COW), inert-gas, and vapor-control systems—to safely conduct a transfer of fuel oil, a transfer of liquid cargo in bulk, or cargo-tank cleaning;

(2) Except as provided in paragraph (g) of this section, holds a license issued under 46 CFR part 10 authorizing service aboard a vessel certified for voyages beyond any Boundary Line described in 46 CFR part 7, except on tankships or self-propelled tank vessels not certified for voyages beyond the Boundary Line; and

(3) Except as provided in paragraph (g) of this section and 46 CFR 13.113 (a) or (c), holds a Tankerman-PIC endorsement issued under 46 CFR part 13 that authorizes the holder to supervise the transfer of fuel oil, the transfer of liquid cargo in bulk, or cargo-tank cleaning, as appropriate to the product.

(b) On each tank barge required to be inspected under 46 U.S.C. 3703, the operator or agent of the vessel, or the person who arranges and hires a person to be in charge of a transfer of fuel oil, of a transfer of liquid cargo in bulk, or of cargo-tank cleaning, shall verify to his or her satisfaction that each PIC—

(1) Has sufficient training and experience with the relevant characteristics of the vessel on which he or she is engaged—including the cargo for transfer, the cargo-containment system, the cargo system (including transfer procedures, and shipboard-emergency equipment and procedures), the control and monitoring systems, the procedures for reporting pollution incidents, and, if installed, the COW, inert-gas, and vapor-control systems—to safely conduct either a transfer of liquid cargo in bulk or cargo-tank cleaning; and

(2) Except as provided in paragraph (g) of this section and 46 CFR part 13.113 (a) or (c), holds a Tankerman-PIC or Tankerman-PIC (Barge) endorsement issued under 46 CFR part 13 that authorizes the holder to supervise the transfer of fuel oil, the transfer of liquid cargo in bulk, or cargo-tank cleaning, as appropriate to the product and vessel.

(c) On each foreign tankship, the operator or agent of the vessel shall verify to his or her satisfaction that each PIC either of a transfer of liquid cargo in bulk or of cargo-tank cleaning—

(1) Has sufficient training and experience with the relevant characteristics of the vessel on which he or she is engaged, including the cargo for transfer,

the cargo-containment system, the cargo system (including transfer procedures, and shipboard-emergency equipment and procedures), the control and monitoring systems, the procedures for reporting pollution incidents, and, if installed, the systems for crude-oil washing, inert gas, and vapor control, to safely conduct either a transfer of liquid cargo in bulk or cargo-tank cleaning;

(2) Except as provided in paragraph (g) of this section, holds a license or other document issued by the flag state or its authorized agent authorizing service as master, mate, pilot, engineer, or operator on that vessel;

(3) Except as provided in paragraph (g) of this section, holds a Dangerous-Cargo Endorsement or Certificate issued by a flag state party to the International Convention on Standards of Training, Certification and Watchkeeping for Seafarers, 1978 (STCW), or other form of evidence acceptable to the Coast Guard, attesting the PIC's meeting the requirements of Chapter V of STCW as a PIC of the transfer of fuel oil, of the transfer of liquid cargo in bulk, or of cargo-tank cleaning;

(4) Is capable of reading, speaking, and understanding in English, or a language mutually-agreed-upon with the shoreside PIC of the transfer, all instructions needed to commence, conduct, and complete a transfer of fuel oil, a transfer of liquid cargo in bulk, or cargo-tank cleaning, except that the use of an interpreter meets this requirement if the interpreter—

(i) Fluently speaks the language spoken by each PIC;

(ii) Is immediately available to the PIC on the tankship at all times during the transfer or cargo-tank cleaning; and

(iii) Is knowledgeable about, and conversant with terminology of, ships, transfers, and cargo-tank cleaning; and

(5) Is capable of effectively communicating with all crewmembers involved in the transfer or cargo-tank cleaning, with or without an interpreter.

(d) On each foreign tank barge, the operator or agent of the vessel shall verify to his or her satisfaction that each PIC either of the transfer of liquid cargo in bulk or of cargo-tank cleaning—

(1) Has sufficient training and experience with the relevant characteristics of the vessel on which he or she is engaged—including the cargo for transfer, the cargo-containment system, the cargo system (including transfer procedures, and shipboard-emergency equipment and procedures), the control and monitoring systems, the procedures for reporting pollution incidents, and, if installed, the COW, inert-gas, and vapor-control systems—to safely conduct a transfer of fuel oil, a transfer of liquid cargo in bulk, or cargo-tank cleaning;

(2) Except as provided in paragraph (g) of this section, holds a Dangerous-Cargo Endorsement or Certificate issued by a flag state party to STCW, or other form of evidence acceptable to the Coast Guard, attesting the PIC's meeting the requirements of Chapter V of STCW as a PIC of the transfer of fuel oil, of the transfer of liquid cargo in bulk, or of cargo-tank cleaning;

(3) Is capable of reading, speaking, and understanding in English, or a language mutually-agreed-upon with the shoreside PIC of the transfer, all instructions needed to commence, conduct, and complete a transfer of fuel oil, a transfer of liquid cargo in bulk, or cargo-tank cleaning, except that the use of an interpreter meets this requirement if the interpreter—

(i) Fluently speaks the language spoken by each PIC;

(ii) Is immediately available to the PIC on the tankship at all times during the transfer or cargo-tank cleaning; and

(iii) Is knowledgeable about, and conversant with terminology of, ships, transfers, and cargo-tank cleaning; and

(4) Is capable of effectively communicating with all crewmembers involved in the transfer or cargo-tank cleaning, with or without an interpreter.

(e) The operator or agent of each vessel to which this section applies shall verify to his or her satisfaction that the PIC of any transfer of fuel oil requiring a Declaration of Inspection—

(1) On each inspected vessel required by 46 CFR chapter I to have a licensed person aboard, holds a valid license

issued under 46 CFR part 10 authorizing service as a master, mate, pilot, engineer, or operator aboard that vessel, or holds a valid merchant mariner's document endorsed as Tankerman-PIC;

(2) On each uninspected vessel, either complies with the requirements of paragraph (e)(1) of this section or carries a letter satisfying the requirements of § 155.715 and designating him or her as a PIC, unless equivalent evidence is immediately available aboard the vessel or at his or her place of employment.

(3) On each tank barge, for its own engine-driven pumps, either complies with paragraph (e)(1) or (2) of this section or has been instructed by the operator or agent of the vessel both in his or her duties and in the Federal statutes and regulations on water pollution that apply to the vessel; or

(4) On each foreign vessel, holds a license or certificate issued by a flag state party to STCW, or other form of evidence acceptable to the Coast Guard, attesting the qualifications of the PIC to act as master, mate, pilot, operator, engineer, or tankerman aboard that vessel.

(f) Except as provided in paragraph (g) of this section, the operator or agent of each self-propelled tank vessel carrying oil or hazardous material in bulk shall verify to his or her satisfaction that the PIC of the transfer of oil or hazardous material in bulk to or from a vessel, or of cargo-tank cleaning, holds a Tankerman-PIC endorsement on his or her MMD and either a license or a Certificate issued by a flag state party to STCW authorizing service as a master, mate, pilot, engineer, or operator aboard that vessel.

(g) The PIC of a cargo-tank cleaning on a vessel at a tank-cleaning facility or shipyard need not hold any of the licenses, documents, certificates, or endorsements required in paragraphs (a) through (f) of this section, if he or she is a National Fire Protection Association Certificated Marine Chemist.

[CGD 79–116, 60 FR 17141, Apr. 4, 1995, as amended by CGD 79–116, 61 FR 25126, May 8, 1997; CGD 79–116, 63 FR 35826, July 1, 1998]

§ 155.715 Contents of letter of designation as a person-in-charge of the transfer of fuel oil.

The letter of instruction required in § 155.710(e)(2) must designate the holder as a person-in-charge of the transfer of fuel oil and state that the holder has received sufficient formal instruction from the operator or agent of the vessel to ensure his or her ability to safely and adequately carry out the duties and responsibilities of the PIC described in 33 CFR 156.120 and 156.150.

[CGD 79–116, 63 FR 35826, July 1, 1998]

§ 155.720 Transfer procedures.

The operator of a vessel with a capacity of 250 or more barrels of oil, hazardous material, or liquefied gas as regulated in Table 4 of 46 CFR part 154 shall provide transfer procedures that meet the requirements of this part and part 156 of this chapter for transferring—

(a) To or from the vessel; and

(b) From tank to tank within the vessel.

[CGD 86–034, 55 FR 36254, Sept. 4, 1990, as amended by CGD 79–116, 62 FR 25127, May 8, 1997]

§ 155.730 Compliance with transfer procedures.

The vessel operator of each vessel required by § 155.720 to have transfer procedures shall maintain them current and shall require vessel personnel to use the transfer procedures for each transfer operation.

[CGD 75–124, 45 FR 7175, Jan. 31, 1980, as amended by CGD 86–034, 55 FR 36254, Sept. 4, 1990]

§ 155.740 Availability of transfer procedures.

The transfer procedures required by § 155.720 must be:

(a) Available for inspection by the COTP or OCMI whenever the vessel is in operation;

(b) Legibly printed in a language or languages understood by personnel engaged in transfer operations; and

(c) Permanently posted or available at a place where the procedures can be easily seen and used by members of the

crew when engaged in transfer operations.

[CGD 75–124, 45 FR 7175, Jan. 31, 1980, as amended by CGD 86–034, 55 FR 36254, Sept. 4, 1990]

§ 155.750 Contents of transfer procedures.

(a) The transfer procedures required by § 155.720 must contain, either in the order listed or by use of a cross-reference index page:

(1) A list of each product transferred to or from the vessel, including the following information:

(i) Generic or chemical name;

(ii) Cargo information as described in § 154.310(a)(5)(ii) of this chapter; and

(iii) Applicability of transfer procedures;

(2) A description of each transfer system on the vessel including:

(i) A line diagram of the vessel's transfer piping, including the location of each valve, pump, control device, vent, and overflow;

(ii) The location of the shutoff valve or other isolation device that separates any bilge or ballast system from the transfer system; and

(iii) A description of and procedures for emptying the discharge containment system required by §§ 155.310 and 155.320;

(3) The number of persons required to be on duty during transfer operations;

(4) The duties by title of each officer, person in charge, tankerman, deckhand, and any other person required for each transfer operation;

(5) Procedures and duty assignments for tending the vessel's moorings during the transfer of oil or hazardous material;

(6) Procedures for operating the emergency shutdown and communications means required by §§ 155.780 and 155.785, respectively;

(7) Procedures for topping off tanks;

(8) Procedures for ensuring that all valves used during the transfer operations are closed upon completion of transfer;

(9) Procedures for reporting discharges of oil or hazardous material into the water; and

(10) Procedures for closing and opening the vessel openings in § 155.815.

(11) Statements explaining that each hazardous materials transfer hose is marked with either the name of each product which may be transferred through the hose or with letters, numbers or other symbols representing all such products and the location in the transfer procedures where a chart or list of the symbols used and a list of the compatible products which may be transferred through the hose can be found for consultation before each transfer.

(b) Exemptions or alternatives granted must be placed in the front of the transfer procedures.

(c) The vessel operator shall incorporate each amendment to the transfer procedures under § 155.760 in the procedures with the related existing requirement, or at the end of the procedures if not related to an existing requirement.

(d) If a vessel is fitted with a vapor control system, the transfer procedures must contain a description of the vapor collection system on the vessel which includes:

(1) A line diagram of the vessel's vapor collection system piping, including the location of each valve, control device, pressure–vacuum relief valve, pressure indicator, flame arresters, and detonation arresters, if fitted;

(2) The location of spill valves and rupture disks, if fitted;

(3) The maximum allowable transfer rate determined in accordance with 46 CFR 39.30–1(d) (1) through (d)(3);

(4) The initial transfer rate for each tank that complies with 46 CFR 39.30–1(h);

(5) A table or graph of transfer rates and corresponding vapor collection system pressure drops calculated in accordance with 46 CFR 39.30–1(b);

(6) The relief settings of each spill valve, rupture disk, and pressure-vacuum relief valve; and

(7) A description of and procedures for operating the vapor collection system, including the:

(i) Pre-transfer equipment inspection requirements;

(ii) Vapor line connection;

(iii) Closed gauging system;

(iv) High level alarm system, if fitted; and

(v) Independent automatic shutdown system, if fitted.

(e) If a cargo tank of a tank vessel is fitted with an overfill device, the transfer procedures must contain a description of the overfill device, including:

(1) The tank overfill device system and specific procedures for the person in charge to—

(i) Monitor the level of cargo in the tank; and

(ii) Shut down transfer operations in time to ensure that the cargo level in each tank does not exceed the maximum amount permitted by § 155.775(b).

(2) Pre-transfer overfill device equipment inspection and test requirements.

(Approved by the Office of Management and Budget under control number 2115–0120)

[CGD 75–124, 45 FR 7175, Jan. 31, 1980, as amended by CGD 88–102, 55 FR 25445, June 21, 1990; CGD 86–034, 55 FR 36254, Sept. 4, 1990; CGD 92–027, 58 FR 39662, July 26, 1993; CGD 90–071a, 59 FR 53291, Oct. 21, 1994]

§ 155.760 Amendment of transfer procedures.

(a) The COTP or OCMI may require the vessel operator of any vessel that is required to have transfer procedures under § 155.720 to amend those procedures if the COTP or OCMI finds that the transfer procedures do not meet the requirements of this part.

(b) The COTP or OCMI shall notify the vessel operator in writing of any inadequacies in the oil transfer procedures. The vessel operator may submit written information, views, and arguments on and proposals for amending the procedures within 14 days from the date of the COTP or OCMI notice. After considering all relevant material presented, the COTP or OCMI shall notify the vessel operator of any amendment required or adopted, or the COTP or OCMI may rescind the notice. The amendment becomes effective 30 days after the vessel operator receives the notice, unless the vessel operator petitions the Commandant to review the COTP or OCMI notice, in which case its effective date is delayed pending a decision by the Commandant. Petitions to the Commandant must be submitted in writing via the COTP or OCMI who issued the requirement to amend.

(c) If the COTP or OCMI finds that there is a condition requiring immediate action to prevent the discharge or risk of discharge that makes the procedure in paragraph (b) of this section impractical or contrary to the public interest, he or she may issue an amendment effective on the date the vessel operator receives notice of it. In such a case, the COTP or OCMI includes a brief statement of the reasons for the findings in the notice, and the vessel operator may petition the Commandant, in any manner, to review the amendment. The petition does not postpone the amendment.

[CGD 75–124, 45 FR 7175, Jan. 31, 1980, as amended by CGD 86–034, 55 FR 36255, Sept. 4, 1990]

§ 155.770 Draining into bilges.

No person may intentionally drain oil or hazardous material from any source into the bilge of a vessel.

[CGD 86–034, 55 FR 36255, Sept. 4, 1990]

§ 155.775 Maximum cargo level of oil.

(a) For the purposes of this section, ''oil'' has the same meaning as provided in § 151.05 of this chapter.

(b) A cargo tank on a tank vessel may not be filled with oil higher than—

(1) 98.5 percent of the cargo tank volume; or

(2) The level at which the overfill alarm required by § 155.480 is set.

[CGD 90–071a, 59 FR 53291, Oct. 21, 1994]

§ 155.780 Emergency shutdown.

(a) A tank vessel with a capacity of 250 or more barrels that is carrying oil or hazardous material as cargo must have on board an emergency means to enable the person in charge of a transfer operation to a facility, to another vessel, or within the vessel to stop the flow of oil or hazardous material.

(b) The means to stop the flow may be a pump control, a quick-acting, power actuated valve, or an operating procedure. If an emergency pump control is used, it must stop the flow of oil or hazardous material if the oil or hazardous material could siphon through the stopped pump.

(c) The means to stop the flow must be operable from the cargo deck, cargo control room, or the usual operating

station of the person in charge of the transfer operation.

[CGD 86–034, 55 FR 36255, Sept. 4, 1990]

§ 155.785 Communications.

(a) During vessel to vessel transfers, each tank vessel with a capacity of 250 or more barrels of cargo that is carrying oil or hazardous material must have a means that enables continuous two-way voice communication between the persons in charge of the transfer operations on both vessels.

(b) Each vessel must have a means, which may be the communication system itself, that enables a person on board each vessel to effectively indicate his desire to use the means of communication required by paragraph (a) of this section.

(c) The means required by paragraph (a) of this section must be usable and effective in all phases of the transfer operation and all conditions of weather.

(d) Portable radio devices used to comply with paragraph (a) of this section during the transfer of flammable or combustible liquids must be intrinsically safe, as defined in 46 CFR 110.15–100(i), and meet Class I, Division I, Group D requirements as defined in 46 CFR 111.80.

[CGD 75–124, 45 FR 7175, Jan. 31, 1980; 45 FR 43705, June 30, 1980, as amended by CGD 86–034, 55 FR 36255, Sept. 4, 1990]

§ 155.790 Deck lighting.

(a) A self-propelled vessel with a capacity of 250 or more barrels of oil or hazardous material that is conducting transfer operations between sunset and sunrise must have deck lighting that adequately illuminates—

(1) Each transfer operations work area and each transfer connection point in use on the vessel; and

(2) Each transfer operations work area and each transfer connection point in use on each barge, if any, moored to the vessel to or from which oil or hazardous material is being transferred;

(b) Where the illumination is apparently inadequate the OCMI or COTP may require verification by instrument of the levels of illumination. On a horizontal plane 3 feet above the deck the illumination must measure at least:

(1) 5.0 foot candles at transfer connection points; and

(2) 1.0 foot candle in transfer operations work areas.

(c) Lighting must be located or shielded so as not to mislead or otherwise interfere with navigation on the adjacent waterways.

[CGD 75–124, 45 FR 7175, Jan. 31, 1980, as amended by CGD 86–034, 55 FR 36255, Sept. 4, 1990]

§ 155.800 Transfer hose.

Hose used to transfer oil or hazardous material must meet the requirements of § 154.500 of this chapter.

[CGD 75–124, 45 FR 7175, Jan. 31, 1980, as amended by CGD 86–034, 55 FR 36255, Sept. 4, 1990]

§ 155.805 Closure devices.

(a) Each end of each transfer hose on board which is not connected for the transfer of oil or hazardous material must be blanked off with butterfly valves, wafer-type resilient seated valves, blank flanges, or other means acceptable to the COTP or OCMI.

(b) New, unused hose is exempt from the requirement in paragraph (a) of this section.

[CGD 75–124, 45 FR 7175, Jan. 31, 1980, as amended by CGD 86–034, 55 FR 36255, Sept. 4, 1990]

§ 155.810 Tank vessel security.

The vessel operator of each tank vessel that contains more oil than the normal clingage and unpumpable bilge or sump residues in any cargo tank shall maintain surveillance of that vessel by using a person who is responsible for the security of the vessel and for keeping unauthorized persons off the vessel.

[CGD 75–124, 45 FR 7175, Jan. 31, 1980]

§ 155.815 Tank vessel integrity.

(a) Except as provided in paragraph (b) of this section, a tank vessel underway or at anchor must have all closure mechanisms on the following openings properly closed:

(1) Expansion trunk hatches;

(2) Ullage openings;

(3) Sounding ports;

(4) Tank cleaning openings; and

(5) Any other tank vessel openings that maintain the seaworthy condition of the tank vessel and prevent the inadvertent release of oil or hazardous material in the event of a tank vessel accident.

(b) No person may open any of the closure mechanisms in paragraph (a) of this section while the tank vessel is underway or at anchor except when authorized and supervised by a licensed officer or the tankerman required by 46 CFR 31.15–5(a).

[CGD 75–124, 45 FR 7175, Jan. 31, 1980, as amended by CGD 86–034, 55 FR 36255, Sept. 4, 1990]

§ 155.820 Records.

The vessel operator shall keep a written record available for inspection by the COTP or OCMI of:

(a) The name of each person currently designated as a person in charge of transfer operations.

(b) The date and result of the most recent test and inspection of each item tested or inspected as required by § 156.170 of this chapter;

(c) The hose information required by § 154.500(e) and (g) of this chapter unless that information is marked on the hose; and

(d) The Declaration of Inspection as required by § 156.150(f) of this chapter.

[CGD 75–124, 45 FR 7175, Jan. 31, 1980, as amended by CGD 86–034, 55 FR 36255, Sept. 4, 1990]

Subpart D—Response Plans

SOURCE: CGD 91–034, 61 FR 1081, Jan. 12, 1996, unless otherwise noted.

§ 155.1010 Purpose.

The purpose of this subpart is to establish requirements for oil spill response plans for certain vessels. The planning criteria in this subpart are intended for use in response plan development and the identification of resources necessary to respond to the oil spill scenarios prescribed during the planning process. The development of a response plan prepares the vessel owner or operator and the vessel's crew to respond to an oil spill. The specific criteria for response resources and their arrival times are not performance standards. They are planning criteria based on a set of assumptions that may not exist during an actual oil spill incident.

§ 155.1015 Applicability.

(a) Except as provided in paragraph (c) of this section, this subpart applies to each vessel that is constructed or adapted to carry, or that carries, oil in bulk as cargo or cargo residue, and that—

(1) Is a vessel of the United States;

(2) Operates on the navigable waters of the United States; or

(3) Transfers oil in a port or place subject to the jurisdiction of the United States.

(b) This subpart also applies to vessels which engage in oil lightering operations in the marine environment beyond the baseline from which the territorial sea is measured, when the cargo lightered is destined for a port or place subject to the jurisdiction of the United States.

(c) This subpart does not apply to the following types of vessels:

(1) Public vessels and vessels deemed public vessels under 14 U.S.C. 827.

(2) Vessels that, although constructed or adapted to carry oil in bulk as cargo or cargo residue, are not storing or carrying oil in bulk as cargo or cargo residue.

(3) Dedicated response vessels when conducting response operations.

(4) Vessels of opportunity when conducting response operations in a response area.

(5) Offshore supply vessels as defined in 46 U.S.C. 2101.

(6) Fishing or fishing tender vessels as defined in 46 U.S.C. 2101 of not more than 750 gross tons when engaged only in the fishing industry.

(7) Foreign flag vessels engaged in innocent passage.

(d) Vessels covered by this subpart that are not operating within the navigable waters or the exclusive economic zone of the United States must meet all requirements of this subpart except for—

(1) Identifying and ensuring, through contract or other approved means, the

availability of response resources including the shore-based spill management team;

(2) Providing the geographic-specific appendices required in §155.1035, 155.1040, or 155.1045, as appropriate; and

(3) Identifying and designating a qualified individual and alternate qualified individual required in §155.1026.

§155.1020 Definitions.

Except as otherwise defined in this section, the definitions in §155.110 apply to this subpart and subparts F and G of this part. For the purposes of this subpart only, the term:

Adverse weather means the weather conditions that will be considered when identifying response systems and equipment in a response plan for the applicable operating environment. Factors to consider include, but are not limited to, significant wave height, ice, temperature, weather-related visibility, and currents within the Captain of the Port (COTP) zone in which the systems or equipment are intended to function.

Animal fat means a non-petroleum oil, fat, or grease derived from animals and not specifically identified elsewhere in this part.

Average most probable discharge means a discharge of the lesser of 50 barrels of oil or 1 percent of the cargo from the vessel during cargo oil transfer operations to or from the vessel.

Bulk means any volume of oil carried in an integral tank of the vessel and oil transferred to or from a marine portable tank or independent tank while on board a vessel.

Captain of the Port (COTP) Zone means a zone specified in 33 CFR part 3 and, for coastal ports, the seaward extension of that zone to the outer boundary of the exclusive economic zone (EEZ).

Cargo means oil that is transported to and off-loaded at a destination by a vessel. It does not include—

(1) Oil carried in integral tanks, marine portable tanks, or independent tanks for use by machinery, helicopters, and boats carried aboard the vessel, or for use by helicopters that are directly supporting the vessel's primary operations; or

(2) Oil transferred from a towing vessel to a vessel in its tow to operate installed machinery other than the propulsion plant.

Contract or other approved means includes—

(1) A written contractual agreement between a vessel owner or operator and an oil spill removal organization. The agreement must identify and ensure the availability of specified personnel and equipment required under this subpart within stipulated response times in the specified geographic areas;

(2) Certification by the vessel owner or operator that specified personnel and equipment required under this subpart are owned, operated, or under the direct control of the vessel owner or operator, and are available within stipulated response times in the specified geographic areas;

(3) Active membership in a local or regional oil spill removal organization that has identified specified personnel and equipment required under this subpart that are available to respond to a discharge within stipulated response times in the specified geographic areas;

(4) A document which—

(i) Identifies the personnel, equipment, and services capable of being provided by the oil spill removal organization within stipulated response times in the specified geographic areas;

(ii) Sets out the parties' acknowledgment that the oil spill removal organization intends to commit the resources in the event of a response;

(iii) Permits the Coast Guard to verify the availability of the identified response resources through tests, inspections, and exercises; and

(iv) Is referenced in the response plan; or

(5) With the written consent of the oil spill removal organization, the identification of an oil spill removal organization with specified equipment and personnel which are available within stipulated response times in the specified geographic areas. This paragraph is an other approved means for only—

(i) A vessel carrying oil as secondary cargo to meet the requirements under §155.1045(i)(3);

(ii) A barge operating on rivers and canals to meet the requirements for

lightering capability under §§ 155.1050(l), 155.1052(g), 155.1230(g), and 155.2230(g);

(iii) A vessel to meet the salvage and firefighting requirements in §§ 155.1050(k), 155.1052(f), 155.1230(f), and 155.2230(f); and

(iv) A vessel to meet the resource requirements in § 155.1052(c), 155.1230(c), and 155.2230(c).

Dedicated response vessel means a vessel of which the service is limited exclusively to oil and hazardous substance spill response-related activities, including spill recovery and transport, tanker escorting, deployment of spill response equipment, supplies, and personnel, and spill response-related training, testing, exercises, and research.

Exclusive economic zone means the zone contiguous to the territorial sea of United States extending to a distance up to 200 nautical miles from the baseline from which the breadth of the territorial sea is measured.

Great Lakes means Lakes Superior, Michigan, Huron, Erie, and Ontario, their connecting and tributary waters, the Saint Lawrence River as far as Saint Regis, and adjacent port areas.

Higher volume port area means the following areas, including any water area within 50 nautical miles seaward of the entrance(s) to the specified port:

(1) Boston, MA.

(2) New York, NY.

(3) Delaware Bay and River to Philadelphia, PA.

(4) St. Croix, VI.

(5) Pascagoula, MS.

(6) Mississippi River from Southwest Pass, LA to Baton Rouge, LA. Note: Vessels destined for, departing from, or offloading at the Louisiana Offshore Oil Port are not considered to be operating in this higher volume port area.

(7) Lake Charles, LA.

(8) Sabine-Neches River, TX.

(9) Galveston Bay and Houston Ship Channel, TX.

(10) Corpus Christi, TX.

(11) Los Angeles/Long Beach Harbor, CA.

(12) San Francisco Bay, San Pablo Bay, Carquinez Strait, and Suisun Bay to Antioch, CA.

(13) Strait of Juan De Fuca at Port Angeles, WA to and including Puget Sound, WA.

(14) Prince William Sound, AK.

Inland area means the area shoreward of the boundary lines defined in 46 CFR part 7, except that in the Gulf of Mexico, it means the area shoreward of the lines of demarcation (COLREG lines) as defined in §§ 80.740 through 80.850 of this chapter. The inland area does not include the Great Lakes.

Maximum extent practicable means the planned capability to respond to a worst case discharge in adverse weather, as contained in a response plan that meets the criteria in this subpart or in a specific plan approved by the Coast Guard.

Maximum most probable discharge means a discharge of—

(1) 2,500 barrels of oil for vessels with an oil cargo capacity equal to or greater than 25,000 barrels; or

(2) 10% of the vessel's oil cargo capacity for vessels with a capacity of less than 25,000 barrels.

Nearshore area means the area extending seaward 12 miles from the boundary lines defined in 46 CFR part 7, except in the Gulf of Mexico. In the Gulf of Mexico, a nearshore area is one extending seaward 12 miles from the line of demarcation (COLREG lines) as defined in §§ 80.740 through 80.850 of this chapter.

Non-persistent or Group I oil means a petroleum-based oil that, at the time of shipment, consists of hydrocarbon fractions—

(1) At least 50% of which by volume, distill at a temperature of 340 degrees C (645 degrees F); and

(2) At least 95% of which by volume, distill at a temperature of 370 degrees C (700 degrees F).

Non-petroleum oil means oil of any kind that is not petroleum-based. It includes, but is not limited to, animal fats and vegetable oils.

Ocean means the open ocean, offshore area, and nearshore area as defined in this subpart.

Offshore area means the area up to 38 nautical miles seaward of the outer boundary of the nearshore area.

Oil field waste means non-pumpable drilling fluids with possible trace amounts of metal and oil.

Oil spill removal organization means an entity that provides response resources.

On-scene coordinator or OSC means the Federal official predesignated by the Coast Guard or Environmental Protection Agency to coordinate and direct Federal removal efforts at the scene of an oil or hazardous substance discharge as prescribed in the National Oil and Hazardous Substances Pollution Contingency Plan (National Contingency Plan) as published in 40 CFR part 300.

Open ocean means the area from 38 nautical miles seaward of the outer boundary of the nearshore area, to the seaward boundary of the exclusive economic zone.

Operating in compliance with the plan means operating in compliance with the provisions of this subpart, including ensuring the availability of the response resources by contract or other approved means and conducting the necessary training and exercises.

Operator means person who is an owner, a demise charterer, or other contractor, who conducts the operation of, or who is responsible for the operation of a vessel. For the purposes of this subpart only, the operator of a towing vessel is not, per se, considered the operator of a vessel being towed.

Other non-petroleum oil means an oil of any kind that is not a petroleum oil, an animal fat, or a vegetable oil.

Owner or vessel owner means any person holding legal or equitable title to a vessel; provided, however, that a person holding legal or equitable title to a vessel solely as security is not the owner. In a case where a Certificate of Documentation has been issued, the owner is the person or persons whose name or names appear on the vessel's Certificate of Documentation provided, however, that where a Certificate of Documentation has been issued in the name of a president or secretary of an incorporated company, such incorporated company is the owner.

Persistent oil means a petroleum-based oil that does not meet the distillation criteria for a non-persistent oil. For the purposes of this subpart, persistent oils are further classified based on specific gravity as follows:

(1) Group II—specific gravity of less than .85.

(2) Group III—specific gravity equal to or greater than .85 and less than .95.

(3) Group IV—specific gravity equal to or greater than .95 and less than or equal to 1.0.

(4) Group V—specific gravity greater than 1.0.

Petroleum oil means petroleum in any form including crude oil, fuel oil, mineral oil, sludge, oil refuse, and refined products.

Qualified individual and alternate qualified individual means a shore-based representative of a vessel owner or operator who meets the requirements of 33 CFR 155.1026.

Response activity means the containment and removal of oil from the water and shorelines, the temporary storage and disposal of recovered oil, or the taking of other actions as necessary to minimize or mitigate damage to public health or welfare or the environment.

Response resources means the personnel, equipment, supplies, and other capability necessary to perform the response activities identified in a response plan.

Rivers and canals mean bodies of water confined within the inland area, including the Intracoastal Waterways and other waterways artificially created for navigation, that have a project depth of 12 feet or less.

Secondary Cargo (see Vessels Carrying Oil as a Secondary Cargo)

Specific gravity means the ratio of the mass of a given volume of liquid at 15 degrees C (60 degrees F) to the mass of an equal volume of pure water at the same temperature.

Spill management team means the personnel identified to staff the organizational structure identified in a response plan to manage response plan implementation.

Substantial threat of such a discharge means any incident involving a vessel that may create a significant risk of discharge of cargo oil. Such incidents include, but are not limited to, groundings, strandings, collisions, hull damage, fire, explosion, loss of propulsion, flooding, on-deck spills, or other similar occurrences.

Tanker means a self-propelled tank vessel constructed or adapted primarily to carry oil or hazardous material in bulk in the cargo spaces.

Tier means the combination of required response resources and the

times within which the resources must arrive on scene. Appendix B of this part, especially Tables 5 and 6, provide specific guidance on calculating the response resources required by each tier. Sections 155.1050(g), 155.1135, 155.1230(d), and 155.2230(d) set forth the required times within which the response resources must arrive on scene. Tiers are applied in three categories:

(1) Higher volume port areas;

(2) The Great Lakes; and

(3) All other operating environments, including rivers and canals, inland, nearshore, and offshore areas.

Vegetable oil means a non-petroleum oil or fat not specifically identified elsewhere in this part that is derived from plant seeds, nuts, kernels or fruits.

Vessel of opportunity means a vessel engaged in spill response activities that is normally and substantially involved in activities other than spill response and not a vessel carrying oil as a primary cargo.

Vessels carrying oil as a primary cargo means all vessels except dedicated response vessels carrying oil in bulk as cargo or cargo residue that have a Certificate of Inspection issued under 46 CFR Chapter I, subchapter D.

Vessels carrying oil as a secondary cargo means vessels, other than vessels carrying oil as a primary cargo, carrying oil in bulk as cargo or cargo residue pursuant to a permit issued under 46 CFR 30.01–5, 70.05–30, or 90.05–35, an International Oil Pollution Prevention (IOPP) or Noxious Liquid Substance (NLS) certificate required by 33 CFR §§ 151.33 or 151.35; or any uninspected vessel that carries oil in bulk as cargo or cargo residue.

Worst case discharge means a discharge in adverse weather conditions of a vessel's entire oil cargo.

§ 155.1025 Operating restrictions and interim operating authorization.

(a) Vessels subject to this subpart may not perform the following functions, unless operating in compliance with a plan approved under § 155.1065:

(1) Handling, storing, or transporting oil on the navigable waters of the United States; or

(2) Transferring oil in any other port or place subject to U.S. jurisdiction.

(b) Vessels subject to this subpart may not transfer oil in a port or place subject to the jurisdiction of the United States, where the oil to be transferred was received from another vessel subject to this subpart during a lightering operation referred to in § 155.1015(b), unless both vessels engaged in the lightering operation were operating at the time in compliance with a plan approved under § 155.1065.

(c)(1) Notwithstanding the requirements of paragraph (a) of this section, a vessel may continue to handle, store, transport, transfer, or lighter oil for 2 years after the date of submission of a response plan pending approval of that plan, if the vessel owner or operator has received written authorization for continued operations from the Coast Guard.

(2) To receive this authorization, the vessel owner or operator must certify in writing to the Coast Guard that the owner or operator has identified and ensured the availability of, through contract or other approved means, the necessary private response resources to respond, to the maximum extent practicable, to a worst case discharge or substantial threat of such a discharge from their vessel as described in §§ 155.1050, 155.1052, 155.1230, or 155.2230, as appropriate.

(d) With respect to paragraph (b) of this section, a vessel may not continue to handle, store, transport, transfer, or lighter oil if—

(1) The Coast Guard determines that the response resources identified in the vessel's certification statement do not meet the requirements of this subpart;

(2) The contracts or agreements cited in the vessel's certification statement are no longer valid;

(3) The vessel is not operating in compliance with the submitted plan; or

(4) The period of this authorization expires.

(e) An owner or operator of a vessel may be authorized by the applicable COTP to have that vessel make one voyage to transport or handle oil in a geographic specific area not covered by the vessel's response plan. All requirements of this subpart must be met for any subsequent voyages to that geographic specific area. To be authorized,

the vessel owner or operator shall certify to the COTP in writing, prior to the vessel's entry into the COTP zone, that—

(1) A response plan meeting the requirements of this subpart (except for the applicable geographic specific appendix) or a shipboard oil pollution emergency plan approved by the flag state that meets the requirements of Regulation 26 of Annex I to the International Convention for the Prevention of Pollution from Ships, 1973 as modified by the Protocol of 1978 relating thereto, as amended (MARPOL 73/78) which is available from the National Technical Information Service, 5285 Port Royal Road, Springfield, VA 22161;

(2) The approved response plan or the required plan section(s) is aboard the vessel;

(3) The vessel owner or operator has identified and informed the vessel master and the COTP of the designated qualified individual prior to the vessel's entry into the COTP zone; and

(4) The vessel owner or operator has identified and ensured the availability of, through contract or other approved means, the private response resources necessary to respond, to the maximum extent practicable under the criteria in §§155.1050, 155.1052, 155.1230, or 155.2230, as appropriate, to a worst case discharge or substantial threat of discharge from the vessel in the applicable COTP zone.

§155.1026 Qualified individual and alternate qualified individual.

(a) The response plan must identify a qualified individual and at least one alternate who meet the requirements of this section. The qualified individual or alternate qualified individual must be available on a 24-hour basis.

(b) The qualified individual and alternate must—

(1) Speak fluent English;

(2) Except as set out in paragraph (c) of this section, be located in the United States;

(3) Be familiar with the implementation of the vessel response plan; and

(4) Be trained in the responsibilities of the qualified individual under the response plan.

(c) For Canadian flag vessels while operating on the Great Lakes or the Strait of Juan de Fuca and Puget Sound, WA, the qualified individual may be located in Canada if he or she meets all other requirements in paragraph (b) of this section.

(d) The owner operator shall provide each qualified individual and alternate qualified individual identified in the plan with a document designating them as a qualified individual and specifying their full authority to—

(1) Activate and engage in contracting with oil spill removal organization(s) and other response related resources identified in the plan;

(2) Act as a liaison with the predesignated Federal On-Scene Coordinator (OCS); and

(3) Obligate funds required to carry out response activities.

(e) The owner or operator of a vessel may designate an organization to fulfill the role of the qualified individual and alternate qualified individual. The organization must then identify a qualified individual and at least one alternate qualified individual who meet the requirements of this section. The vessel owner or operator is required to list in the response plan the organization, the person identified as the qualified individual, and the person or persons identified as the alternate qualified individual(s).

(f) The qualified individual is not responsible for—

(1) The adequacy of response plans prepared by the owner or operator; or

(2) Contracting or obligating funds for response resources beyond the full authority contained in their designation from the owner or operator of the vessel.

(g) The liability of a qualified individual is considered to be in accordance with the provisions of 33 U.S.C. 1321(c)(4).

§155.1030 General response plan requirements.

(a) The plan must cover all geographic areas of the United States in which the vessel intends to handle, store, or transport oil, including port areas and offshore transit areas.

(b) The plan must be written in English and, if applicable, in a language that is understood by the crew

members with responsibilities under the plan.

(c) A vessel response plan must be divided into the following sections:

(1) General information and introduction.

(2) Notification procedures.

(3) Shipboard spill mitigation procedures.

(4) Shore-based response activities.

(5) List of contacts.

(6) Training procedures.

(7) Exercise procedures.

(8) Plan review and update procedures.

(9) On board notification checklist and emergency procedures (unmanned tank barges only).

(10) Geographic-specific appendix for each COTP zone in which the vessel or vessels operate.

(11) An appendix for vessel-specific information for the vessel or vessels covered by the plan.

(d) A vessel owner or operator with multiple vessels may submit one plan for each class of vessel (i.e., manned vessels carrying oil as primary cargo, unmanned vessels carrying oil as primary cargo, and vessels carrying oil as secondary cargo) with a separate vessel-specific appendix for each vessel covered by the plan and a separate geographic-specific appendix for each COTP zone in which the vessel(s) will operate.

(e) The required contents for each section of the plan are contained in §§ 155.1035, 155.1040, and 155.1045, as applicable to the type or service of the vessel.

(f) The response plan for a barge carrying nonhazardous oil field waste may follow the same format as that for a vessel carrying oil as a secondary cargo under § 155.1045 in lieu of the plan required under § 155.1035 or § 155.1040.

(g) A response plan must be divided into the sections described in paragraph (c) of this section unless the plan is supplemented with a cross-reference table to identify the location of the information required by this subpart.

(h) The information contained in a response plan must be consistent with the—

(1) National Oil and Hazardous Substances Pollution Contingency Plan (NCP) (40 CFR part 300) and the Area Contingency Plan(s) (ACP) in effect on the date 6 months prior to the submission date of the response plan; or

(2) More recent NCP and ACP(s).

(i) Copies of the submitted and approved response plan must be available as follows:

(1) The owner or operator of all vessels, except for unmanned tank barges, shall ensure that one English language copy of the plan sections listed in paragraph (c) (1), (2), (3), (5), (10) and (11) of this section and the Coast Guard approval letter or notarized copy of the approval letter are maintained aboard the vessel. If applicable, additional copies of the required plan sections must be in the language understood by crew members with responsibilities under the plan and maintained aboard the vessel.

(2) The owner or operator of all unmanned tank barges shall ensure that one English language copy of the plan section listed in paragraph (c)(9) of this section and the Coast Guard approval letter or notarized copy of the approval letter are maintained aboard the barge.

(3) The vessel owner or operator shall maintain a current copy of the entire plan, and ensure that each person identified as a qualified individual and alternate qualified individual in the plan has a current copy of the entire plan.

(j) If an owner or operator of a United States flag vessel informs the Coast Guard in writing at the time of the plan submission according to the procedures of § 155.1065, the owner or operator may address the provisions of Regulation 26 of MARPOL 73/78 if the owner or operator—

(1) Develops a vessel response plan under § 155.1030 and §§ 155.1035, 155.1040, or 155.1045, as applicable;

(2) Expands the plan to cover discharges of all oils defined under MARPOL, including fuel oil (bunker) carried on board. The owner or operator is not required to include these additional oils in calculating the planning volumes that are used to determine the quantity of response resources that the owner or operator must ensure through contract or other approved means;

(3) Provides the information on authorities or persons to be contacted in the event of an oil pollution incident as

required by Regulation 26 of MARPOL 73/78. This information must include—

(i) An appendix containing coastal State contacts for those coastal States the exclusive economic zone of which the vessel regularly transits. The appendix should list those agencies or officials of administrations responsible for receiving and processing pollution incident reports; and

(ii) An appendix of port contacts for those ports at which the vessel regularly calls; and

(4) Expands the plan to include the procedures and point of contact on the ship for coordinating shipboard activities with national and local authorities in combating an oil spill incident. The plan should address the need to contact the coastal State to advise them of action(s) being implemented and determine what authorization(s), if any, are needed.

(5) Provides a cross reference section to identify the location of the information required by §155.1030(j).

(k) A vessel carrying oil as a secondary cargo may comply with the requirements of §155.1045 by having a response plan approved under Regulation 26 of MARPOL 73/78 with the addition of the following—

(1) Identification of the qualified individual and alternate that meets the requirements of §155.1026;

(2) A geographic specific appendix meeting the requirements of §155.1045(i), including the identification of a contracted oil spill removal organization;

(3) Identification of a spill management team;

(4) An appendix containing the training procedures required by 155.1045(f); and

(5) An appendix containing the exercise procedures required by 155.1045(g).

(l) For plans submitted prior to the effective date of this final rule, the owner or operator of each vessel may elect to comply with any or all of the provisions of this final rule by amending or revising the appropriate section of the previously submitted plan.

§155.1035 Response plan requirements for manned vessels carrying oil as a primary cargo.

(a) *General information and introduction.* This section of the response plan must include—

(1) The vessel's name, country of registry, call sign, official number, and International Maritime Organization (IMO) international number (if applicable). If the plan covers multiple vessels, this information must be provided for each vessel;

(2) The name, address, and procedures for contacting the vessel's owner or operator on a 24-hour basis;

(3) A list of the COTP zones in which the vessel intends to handle, store, or transport oil;

(4) A table of contents or index of sufficient detail to permit personnel with responsibilities under the response plan to locate the specific sections of the plan; and

(5) A record of change(s) page to record information on plan reviews, updates or revisions.

(b) *Notification procedures.* This section of the response plan must include the following notification information:

(1) A checklist with all notifications, including telephone or other contact numbers, in order of priority to be made by shipboard or shore-based personnel and the information required for those notifications. Notifications must include those required by—

(i) MARPOL 73/78 and 33 CFR part 153; and

(ii) Any applicable State.

(2) Identification of the person(s) to be notified of a discharge or substantial threat of a discharge of oil. If the notifications vary due to vessel location, the persons to be notified also must be identified in a geographic-specific appendix. This section must separately identify—

(i) The individual(s) or organization(s) to be notified by shipboard personnel; and

(ii) The individual(s) or organization(s) to be notified by shore-based personnel.

(3) The procedures for notifying the qualified individual(s) designated by the vessel's owner or operator.

(4) Descriptions of the primary and, if available, secondary communications methods by which the notifications will be made that should be consistent with the regulations in § 155.1035(b)(1).

(5) The information that is to be provided in the initial and any follow up notifications required by paragraph (b)(1) of this section.

(i) The initial notification may be submitted in accordance with IMO Resolution A648(16) ''General Principles for Ship Reporting Systems and Ship Reporting Requirements'' which is available through COMDT G–MSO–4, U.S. Coast Guard Headquarters, 2100 Second Street SW., Washington, DC 20593–0001. It must include at least the following information:

(A) Vessel name, country of registry, call sign, and official number (if any);

(B) Date and time of the incident;

(C) Location of the incident;

(D) Course, speed, and intended track of vessel;

(E) Radio station(s) and frequencies guarded;

(F) Date and time of next report;

(G) Type and quantity of oil on board;

(H) Nature and detail of defects, deficiencies, and damage (e.g. grounding, collision, hull failure, etc.);

(I) Details of pollution, including estimate of oil discharged or threat of discharge;

(J) Weather and sea conditions on scene;

(K) Ship size and type;

(L) Actions taken or planned by persons on scene;

(M) Current conditions of the vessel; and

(N) Number of crew and details of injuries, if any.

(ii) After the transmission of the initial notification, as much as possible of the information essential for the protection of the marine environment as is appropriate to the incident must be reported to the appropriate on-scene coordinator in a follow-up report. This information must include—

(A) Additional details on the type of cargo on board;

(B) Additional details on the condition of the vessel and ability to transfer cargo, ballast, and fuel;

(C) Additional details on the quantity, extent and movement of the pollution and whether the discharge is continuing;

(D) Any changes in the on-scene weather or sea conditions; and

(E) Actions being taken with regard to the discharge and the movement of the ship.

(6) Identification of the person(s) to be notified of a vessel casualty potentially affecting the seaworthiness of a vessel and the information to be provided by the vessel's crew to shore-based personnel to facilitate the assessment of damage stability and stress.

(c) *Shipboard spill mitigation procedures.* This section of the response plan must include—

(1) Procedures for the crew to mitigate or prevent any discharge or a substantial threat of such discharge of oil resulting from shipboard operational activities associated with internal or external cargo transfers. Responsibilities of vessel personnel should be identified by job title. These procedures must address personnel actions in the event of a—

(i) Transfer system leak;

(ii) Tank overflow; or

(iii) Suspected cargo tank or hull leak;

(2) Procedures in the order of priority for the crew to mitigate or prevent any discharge or a substantial threat of such a discharge in the event of the following casualties or emergencies:

(i) Grounding or stranding.

(ii) Collision.

(iii) Explosion or fire, or both.

(iv) Hull failure.

(v) Excessive list.

(vi) Equipment failure (e.g. main propulsion, steering gear, etc.);

(3) Procedures for the crew to deploy discharge removal equipment as required under subpart B of this part;

(4) The procedures for internal transfers of cargo in an emergency;

(5) The procedures for ship-to-ship transfers of cargo in an emergency:

(i) The format and content of the ship-to-ship transfer procedures must be consistent with the Ship to Ship Transfer Guide (Petroleum) published jointly by the International Chamber of Shipping and the Oil Companies International marine Forum (OCIMF).

(ii) The procedures must identify the response resources necessary to carry out the transfers, including—

(A) Fendering equipment (ship-to-ship only);

(B) Transfer hoses and connection equipment;

(C) Portable pumps and ancillary equipment;

(D) Lightering and mooring masters (ship-to-ship only); and

(E) Vessel and barge brokers (ship-to-ship only).

(iii) Reference can be made to a separate oil transfer procedure and lightering plan carried aboard the vessel, provided that safety considerations are summarized in the response plan.

(iv) The location of all equipment and fittings, if any, carried aboard the vessel to perform such transfers must be identified;

(6) The procedures and arrangements for emergency towing, including the rigging and operation of any emergency towing equipment, including that required by subpart B of this part, aboard the vessel;

(7) The location, crew responsibilities, and procedures for use of shipboard equipment which may be carried to mitigate an oil discharge;

(8) The crew responsibilities, if any, for recordkeeping and sampling of spilled oil. Any requirements for sampling must address safety procedures to be followed by the crew;

(9) The crew's responsibilities, if any, to initiate a response and supervise shore-based response resources;

(10) Damage stability and hull stress considerations when performing shipboard mitigation measures. This section must identify and describe—

(i) Activities in which the crew is trained and qualified to execute absent shore-based support or advice; and

(ii) The information to be collected by the vessel's crew to facilitate shore-based assistance; and

(11)(i) Location of vessel plans necessary to perform salvage, stability, and hull stress assessments. A copy of these plans must be maintained ashore by either the vessel owner or operator or the vessel's recognized classification society unless the vessel has prearranged for a shore-based damage stability and residual strength calculation program with the vessel's baseline strength and stability characteristics pre-entered. The response plan must indicate the shore location and 24-hour access procedures of the calculation program or the following plans:

(A) General arrangement plan.

(B) Midship section plan.

(C) Lines plan or table of offsets.

(D) Tank tables.

(E) Load line assignment.

(F) Light ship characteristics.

(ii) The plan must identify the shore location and 24-hour access procedures for the computerized, shore-based damage stability and residual structural strength calculation programs required by §155.240.

(d) *Shore-based response activities.* This section of the response plan must include the following information:

(1) The qualified individual's responsibilities and authority, including immediate communication with the Federal on-scene coordinator and notification of the oil spill removal organization(s) identified in the plan.

(2) If applicable, procedures for transferring responsibility for direction of response activities from vessel personnel to the shore-based spill management team.

(3) The procedures for coordinating the actions of the vessel owner or operator or qualified individual with the predesignated Federal on-scene coordinator responsible for overseeing or directing those actions.

(4) The organizational structure that will be used to manage the response actions. This structure must include the following functional areas and must further include information for key components within each functional area:

(i) Command and control;

(ii) Public information;

(iii) Safety;

(iv) Liaison with government agencies;

(v) Spill response operations;

(vi) Planning;

(vii) Logistics support; and

(viii) Finance.

(5) The responsibilities of, duties of, and functional job descriptions for each oil spill management team position within the organizational structure

identified in paragraph (d)(4) of this section.

(e) *List of contacts.* The name, location, and 24-hour contact information for the following key individuals and organizations must be included in this section of the response plan or, if more appropriate, in a geographic-specific appendix and referenced in this section of the response plan:

(1) Vessel owner or operator.

(2) Qualified individual and alternate qualified individual for the vessel's area of operation.

(3) Applicable insurance representatives or surveyors for the vessel's area of operation.

(4) The vessel's local agent(s) for the vessel's area of operation.

(5) Person(s) within the oil spill removal organization to notify for activation of that oil spill removal organization for the three spill scenarios identified in paragraph (i)(5) of this section for the vessel's area of operation.

(6) Person(s) within the identified response organization to notify for activating that organization to provide:

(i) The required emergency lightering required by § 155.1050(l), § 155.1052(g), § 155.1230(g), or § 155.2230(g), as applicable to the type of service of the vessel; and

(ii) The required salvage and firefighting required by § 155.1050(k), § 155.1052(e), § 155.1230(e), and § 155.2230(e), as applicable to the type of service of the vessel.

(7) Person(s) to notify for activation of the spill management team for the spill response scenarios identified in paragraph (i)(5) of this section for the vessel's area of operation.

(f) *Training procedures.* This section of the response plan must address the training procedures and programs of the vessel owner or operator to meet the requirements in § 155.1055.

(g) *Exercise procedures.* This section of the response plan must address the exercise program to be carried out by the vessel owner or operator to meet the requirements in § 155.1060.

(h) *Plan review, update, revision, amendment, and appeal procedure.* This section of the response plan must address—

(1) The procedures to be followed by the vessel owner or operator to meet the requirements of § 155.1070; and

(2) The procedures to be followed for any post-discharge review of the plan to evaluate and validate its effectiveness.

(i) *Geographic-specific appendices for each COTP zone in which a vessel operates.* A geographic-specific appendix must be included for each COTP zone identified. The appendices must include the following information or identify the location of such information within the plan:

(1) A list of the geographic areas (port areas, rivers and canals, Great Lakes, inland, nearshore, offshore, and open ocean areas) in which the vessel intends to handle, store, or transport oil within the applicable COTP zone.

(2) The volume and group of oil on which the required level of response resources are calculated.

(3) Required Federal or State notifications applicable to the geographic areas in which a vessel operates.

(4) Identification of the qualified individuals.

(5) Identification of the oil spill removal organization(s) that are identified and ensured available, through contract or other approved means, and the spill management team to respond to the following spill scenarios:

(i) Average most probable discharge.

(ii) Maximum most probable discharge.

(iii) Worst case discharge.

(6) The organization(s) identified to meet the requirements of paragraph (i)(5) of this section must be capable of providing the equipment and supplies necessary to meet the requirements of §§ 155.1050, 155.1052, 155.1230, and 155.2230, as appropriate, and sources of trained personnel to continue operation of the equipment and staff the oil spill removal organization(s) and spill management team identified for the first 7 days of the response.

(7) The appendix must list the response resources and related information required under §§ 155.1050, 155.1052, 155.1230, 155.2230, and Appendix B of this part, as appropriate.

(8) If an oil spill removal organization(s) has been evaluated by the Coast

Guard and their capability has been determined to equal or exceed the response capability needed by the vessel, the appendix may identify only the organization and their applicable classification and not the information required in paragraph (i)(7) of this section.

(9) The appendix must also separately list the companies identified to provide the salvage, vessel firefighting, lightering, and if applicable, dispersant capabilities required in this subpart.

(j) *Appendices for vessel-specific information.* This section must include for each vessel covered by the plan the following information:

(1) List of the vessel's principal characteristics.

(2) Capacities of all cargo, fuel, lube oil, ballast, and fresh water tanks.

(3) The total volume and cargo groups of oil cargo that would be involved in the—

(i) Maximum most probable discharge; and

(ii) Worst case discharge.

(4) Diagrams showing location of all tanks.

(5) General arrangement plan (can be maintained separately aboard the vessel providing the response plan identifies the location).

(6) Midships section plan (can be maintained separately aboard the vessel providing the response plan identifies the location).

(7) Cargo and fuel piping diagrams and pumping plan, as applicable (can be maintained separately aboard the vessel providing the response plan identifies the location).

(8) Damage stability data (can be maintained separately providing the response plan identifies the location).

(9) Location of cargo and fuel stowage plan for vessel (normally maintained separately aboard the vessel).

(10) Location of information on the name, description, physical and chemical characteristics, health and safety hazards, and spill and firefighting procedures for the oil cargo aboard the vessel. A material safety data sheet meeting the requirements of 29 CFR 1910.1200, cargo information required by 33 CFR 154.310, or equivalent will meet this requirement. This information can be maintained separately.

[CGD 91–034, 61 FR 1081, Jan. 12, 1996, as amended by CGD 96–026, 61 FR 33666, June 28, 1996]

§ 155.1040 Response plan requirements for unmanned tank barges carrying oil as a primary cargo.

(a) *General information and introduction.* This section of the response plan must include—

(1) A list of tank barges covered by the plan, which must include the country of registry, call sign, IMO international numbers (if applicable), and official numbers of the listed tank barges;

(2) The name, address, and procedures for contacting the barge's owner or operator on a 24-hour basis;

(3) A list of the COTP zones in which the tank barges covered by the plan intend to handle, store, or transport oil;

(4) A table of contents or index of sufficient detail to permit personnel with responsibilities under the response plan to locate the specific sections of the plan; and

(5) A record of change(s) page used to record information on plan reviews, updates or revisions.

(b) *Notification procedures.* This section of the response plan must include the following notification information:

(1) A checklist with all notifications. The checklist must include notifications required by MARPOL 73/78, 33 CFR part 153, and any applicable State, including telephone or other contact numbers, in the order of priority and the information required for those notifications to be made by the—

(i) Towing vessel;

(ii) Vessel owner or operator; or

(iii) Qualified individual.

(2) Identification of the person(s) to be notified of a discharge or substantial threat of a discharge of oil. If the notifications vary due to the location of the barge, the persons to be notified also must be identified in a geographic-specific appendix. This section must separately identify—

(i) The individual(s) or organization(s) to be notified by the towing vessel; and

(ii) The individual(s) or organization(s) to be notified by shore-based personnel.

(3) The procedures for notifying the qualified individuals designated by the barge's owner or operator.

(4) Identification of the primary and, if available, secondary communications methods by which the notifications will be made, consistent with the requirements of paragraph (b)(1) of this section.

(5) The information that is to be provided in the initial and any follow-up notifications required by paragraph (b)(1) of this section.

(i) The initial notification information must include at least the following information:

(A) Towing vessel name (if applicable);

(B) Tank barge name, country of registry, and official number;

(C) Date and time of the incident;

(D) Location of the incident;

(E) Course, speed, and intended track of towing vessel (if applicable);

(F) Radio station(s) frequencies guarded by towing vessel (if applicable);

(G) Date and time of next report;

(H) Type and quantity of oil on board;

(I) Nature and details of defects, deficiencies, and damage (e.g., grounding, collision, hull failure, etc.);

(J) Details of pollution, including estimate of oil discharged or threat of discharge;

(K) Weather and sea conditions on scene;

(L) Barge size and type;

(M) Actions taken or planned by persons on scene;

(N) Current condition of the barge; and

(O) Details of injuries, if any.

(ii) After the transmission of the initial notification, as much as possible of the information essential for the protection of the marine environment as is appropriate to the incident must be reported to the appropriate on-scene coordinator in a follow-up report. This information must include—

(A) Additional detail on the type of cargo on board;

(B) Additional details on the condition of the barge and ability to transfer cargo, ballast, and fuel;

(C) Additional details on the quantity, extent and movement of the pollution and whether the discharge is continuing;

(D) Any changes in the on-scene weather or sea conditions; and

(E) Actions being taken with regard to the discharge and the movement of the vessel.

(6) Identification of the person(s) to be notified of a vessel casualty potentially affecting the seaworthiness of a vessel and the information to be provided by the towing vessel personnel or tankermen, as applicable, to shore-based personnel to facilitate the assessment of damage stability and stress.

(c) *Shipboard spill mitigation procedures.* This section of the response plan must include—

(1) Procedures to be followed by the tankerman, as defined in 46 CFR 35.35–1, to mitigate or prevent any discharge or a substantial threat of such a discharge of oil resulting from operational activities and casualties. These procedures must address personnel actions in the event of a—

(i) Transfer system leak;

(ii) Tank overflow; or

(iii) Suspected cargo tank or hull leak;

(2) Procedures in the order of priority for the towing vessel or barge owner or operator to mitigate or prevent any discharge or a substantial threat of such a discharge of oil in the event of the following casualties or emergencies:

(i) Grounding or stranding;

(ii) Collision;

(iii) Explosion or fire, or both;

(iv) Hull failure;

(v) Excessive list; and

(3) Procedures for tankermen or towing vessel crew to employ discharge removal equipment required by subpart B of this part;

(4) The procedures for the internal transfer of cargo in an emergency;

(5) The procedures for ship-to-ship transfers of cargo in an emergency:

(i) The procedures must identify the response resources necessary to carry out the transfers, including—

(A) Fendering equipment (ship-to-ship only);

(B) Transfer hoses and connection equipment;

(C) Portable pumps and ancillary equipment; and

(D) Lightering vessels (ship-to-ship only).

(ii) Reference can be made to separate oil transfer procedures or a lightering plan provided that safety considerations are summarized in the response plan.

(iii) The location of all equipment and fittings, if any, to perform such transfers must be identified;

(6) The procedures and arrangements for emergency towing, including the rigging and operation of any emergency towing equipment, including that required by subpart B of this part aboard the barge;

(7) The location and procedures for use of equipment stowed aboard either the barge or towing vessel to mitigate an oil discharge;

(8) The responsibilities of the towing vessel crew and facility or fleeting area personnel, if any, to initiate a response and supervise shore-based response resources;

(9) Damage stability, if applicable, and hull stress considerations when performing on board mitigation measures. This section must identify and describe—

(i) Activities in which the towing vessel crew or tankerman is trained and qualified to execute absent shore-based support or advice;

(ii) The individuals who shall be notified of a casualty potentially affecting the seaworthiness of the barge; and

(iii) The information that must be provided by the towing vessel to facilitate the assessment of damage stability and stress; and

(10)(i) Location of barge plans necessary to perform salvage, stability, and hull stress assessments. A copy of these barge plans must be maintained ashore by either the barge owner or operator or the vessel's recognized classification society. The response plan must indicate the shore location and 24-hour access procedures of the following plans:

(A) General arrangement plan.

(B) Midship section plan.

(C) Lines plan or table of offsets, as available.

(D) Tank tables; and

(ii) Plans for offshore oil barges must identify the shore location and 24-hour access procedures for the computerized shore-based damage stability and residual structural strength calculation programs required by §155.240.

(d) *Shore-based response activities.* This section of the response plan must include the following information:

(1) The qualified individual's responsibilities and authority, including immediate communication with the Federal on-scene coordinator and notification of the oil spill removal organization(s) identified in the plan.

(2) If applicable, procedures for transferring responsibility for direction of response activities from towing vessel personnel or tankermen to the shore-based spill management team.

(3) The procedures for coordinating the actions of the barge owner or operator of qualified individual with the action of the predesignated Federal on-scene coordinator responsible for overseeing or directing those actions.

(4) The organizational structure that will manage the barge owner or operator's response actions. This structure must include the following functional areas and must further include information for key components within each functional area:

(i) Command and control;

(ii) Public information;

(iii) Safety;

(iv) Liaison with government agencies;

(v) Spill response operations;

(vi) Planning;

(vii) Logistics support; and

(viii) Finance.

(5) The responsibilities of, duties of, and functional job descriptions for each oil spill management team position within the organizational structure identified in paragraph (d)(4) of this section.

(e) *List of contacts.* The name, location, and 24-hour contact information for the following key individuals and organizations must be included in this section or, if more appropriate, in a geographic-specific appendix and referenced in this section:

(1) Barge owner or operator.

(2) Qualified individual and alternate qualified individual for the tank barge's area of operation.

(3) Applicable insurance representatives or surveyors for the barge's area(s) of operation.

(4) Person(s) within the oil spill removal organization to notify for activation of that oil spill removal organization for the spill scenarios identified in paragraph (j)(5) of this section for the barges's area(s) of operation.

(5) Person(s) within the identified response organization to notify for activating that organization to provide:

(i) The required emergency lightering required by §§ 155.1050(l), 155.1052(g), 155.1230(g), and 155.2230(g), as applicable to the type of service of the barge(s); and

(ii) The required salvage and fire fighting required by §§ 155.1050(k), 155.1052(e), 155.1230(e), and 155.2230(e), as applicable to the type of service of the barge(s).

(6) Person(s) to notify for activation of the spill management team for the spill response scenarios identified in paragraph (j)(5) of this section for the vessel's area of operation.

(f) *Training procedures.* This section of the response plan must address the training procedures and programs of the barge owner or operator to meet the requirements in § 155.1055.

(g) *Exercise procedures.* This section of the response plan must address the exercise program carried out by the barge owner or operator to meet the requirements in § 155.1060.

(h) *Plan review, update, revisions amendment, and appeal procedure.* This section of the response plan must address—

(1) The procedures to be followed by the barge owner or operator to meet the requirements of § 155.1070; and

(2) The procedures to be followed for any post-discharge review of the plan to evaluate and validate its effectiveness.

(i) *On board notification checklist and emergency procedures.* This portion of the response plan must be maintained in the documentation container aboard the unmanned barge. The owner or operator of an unmanned tank barge subject to this section shall provide the personnel of the towing vessel, fleeting area, or facility that the barge may be moored at with the information required by this paragraph and the responsibilities that the plan indicates will be carried out by these personnel. The on board notification checklist and emergency procedures must include—

(1) The toll-free number of the National Response Center;

(2) The name and procedures for contacting a primary qualified individual and at least one alternate on a 24-hour basis;

(3) The name, address, and procedure for contacting the vessel's owner or operator on a 24-hour basis;

(4) The list of information to be provided in the notification by the reporting personnel;

(5) A statement of responsibilities of and actions to be taken by reporting personnel after an oil discharge or substantial threat of such discharge; and

(6) The information contained in paragraph (c)(1) of this section.

(j) *Geographic-specific appendices for each COTP zone in which a tank barge operates.* A geographic-specific appendix must be included for each COTP zone identified. The appendices must include the following information or identify the location of such information within the plan:

(1) A list of the geographic areas (port areas, rivers and canals, Great Lakes, inland, nearshore, offshore, and open ocean areas) in which the barge intends to handle, store, or transport oil within the applicable COTP zone.

(2) The volume and group of oil on which the required level of response resources are calculated.

(3) Required Federal or State notifications applicable to the geographic areas in which the barge operates.

(4) Identification of the qualified individuals.

(5) Identification of the oil spill removal organization(s) that are identified and ensured available, through contract or other approved means and the spill management team to provide the response resources necessary to respond to the following spill scenarios:

(i) An average most probable discharge.

(ii) A maximum most probable discharge.

(iii) A worst case discharge to the maximum extent practicable.

(6) The organization(s) identified to meet the provisions of paragraph (j)(5) of this section must be capable of providing the equipment and supplies necessary to meet the provisions of §§ 155.1050, 155.1052, 155.1230, and 155.2230, as appropriate, and sources of trained personnel to continue operation of the equipment and staff the oil spill removal organization(s) and spill management team identified for the first seven days of the response.

(7) The appendix must list the response resources and related information required under §§ 155.1050, 155.1052, 155.1230, 155.2230, and Appendix B of this part, as appropriate.

(8) If the oil spill removal organization(s) providing the necessary response resources has been evaluated by the Coast Guard and their capability has been determined to equal or exceed the response capability needed by the vessel, the appendix may identify only the organization and their applicable classification and not the information required in paragraph (j)(7) of this section.

(9) The appendix must also separately list the companies identified to provide the salvage, barge firefighting, lightering, and if applicable, dispersant capabilities required in this subpart.

(k) *Appendices for barge-specific information.* Because many of the tank barges covered by a response plan may be of the same design, this information does not need to be repeated provided the plan identifies the tank barges to which the same information would apply. The information must be part of the response plan unless specifically noted. This section must include for each barge covered by the plan the following information:

(1) List of the principal characteristics of the vessel.

(2) Capacities of all cargo, fuel, lube oil, and ballast tanks.

(3) The total volumes and cargo group(s) of oil cargo that would be involved in the—

(i) Maximum most probable discharge; and

(ii) Worst case discharge.

(4) Diagrams showing location of all tanks aboard the barge.

(5) General arrangement plan (can be maintained separately providing that the location is identified).

(6) Midships section plan (can be maintained separately providing that the location is identified).

(7) Cargo and fuel piping diagrams and pumping plan, as applicable (can be maintained separately providing that the location is identified).

(8) Damage stability data, if applicable.

(9) Location of cargo and fuel stowage plan for barge(s) (normally maintained separately).

(10) Location of information on the name, description, physical and chemical characteristics, health and safety hazards, and spill and firefighting procedures for the oil cargo aboard the barge. A material safety data sheet meeting the requirements of 29 CFR 1910.1200, cargo information required by 33 CFR 154.310, or equivalent will meet this requirement. This information can be maintained separately.

§ 155.1045 Response plan requirements for vessels carrying oil as a secondary cargo.

(a) *General information and introduction.* This section of the response plan must include—

(1) The vessel's name, country of registry, call sign, official number, and IMO international number (if applicable). If the plan covers multiple vessels, this information must be provided for each vessel;

(2) The name, address, and procedures for contacting the vessel's owner or operator on a 24-hour basis;

(3) A list of COTP zones in which the vessel intends to handle, store, or transport oil;

(4) A table of contents or index of sufficient detail to permit personnel with responsibilities under the response plan to locate the specific sections of the plan; and

(5) A record of change(s) page used to record information on plan updates or revisions.

(6) As required in paragraph (c) of this section, the vessel owner or operator must list in his or her plan the total volume of oil carried in bulk as cargo.

(i) For vessels that transfer a portion of their fuel as cargo, 25 percent of the fuel capacity of the vessel plus the capacity of any oil cargo tank(s) will be assumed to be the cargo volume for determining applicable response plan requirements unless the vessel owner or operator indicates otherwise.

(ii) A vessel owner or operator can use a volume less than 25 percent if he or she submits historical data with the plan that substantiates the transfer of a lower percentage of its fuel capacity between refuelings.

(b) *Notification procedures.* This section of the response plan must include the following notification information:

(1) A checklist with all notifications, including telephone or other contact numbers, in the order of priority to be made by shipboard or shore-based personnel and the information required for those notifications. Notifications must include those required by—

(i) MARPOL 73/78 and 33 CFR part 153; and

(ii) Any applicable State.

(2) Identification of the person(s) to be notified of a discharge or substantial threat of discharge of oil. If notifications vary due to vessel location, the person(s) to be notified also must be identified in a geographic-specific appendix. This section must separately identify—

(i) The individual(s) or organization(s) to be notified by shipboard personnel; and

(ii) The individual(s) or organization(s) to be notified by shore-based personnel.

(3) The procedures for notifying the qualified individual and alternate qualified individual.

(4) Descriptions of the primary and, if available, secondary communication methods by which the notifications will be made, consistent with the requirements in paragraph (b)(1) of this section.

(5) The information that is to be provided in the initial and any follow-up notifications required by paragraph (b)(1) of this section.

(i) The initial notification may be submitted in accordance with IMO Resolution A648(16) ''General Principles for Ship Reporting Systems and Ship Reporting Requirements.'' It must include at least the following information:

(A) Vessel name, country of registry, call sign, IMO international number (if applicable), and official number (if any);

(B) Date and time of the incident;

(C) Location of the incident;

(D) Course, speed, and intended track of vessel;

(E) Radio station(s) and frequencies guarded;

(F) Date and time of next report;

(G) Type and quantity of oil on board;

(H) Nature and detail of defects, deficiencies, and damage (e.g., grounding, collision, hull failure, etc.);

(I) Details of pollution, including estimate of oil discharged or threat of discharge;

(J) Weather and sea conditions on scene;

(K) Ship size and type;

(L) Actions taken or planned by persons on scene;

(M) Current conditions of the vessel; and

(N) Number of crew and details of injuries, if any.

(ii) After the transmission of the initial notification, as much as possible of the information essential for the protection of the marine environment as is appropriate to the incident must be reported to the appropriate on-scene coordinator in a follow-up report. This information must include—

(A) Additional details on the type of cargo on board;

(B) Additional details on the condition of the vessel and ability to transfer cargo, ballast, and fuel;

(C) Additional details on the quantity, extent and movement of the pollution and whether the discharge is continuing;

(D) Any changes in the on-scene weather or sea conditions; and

(E) Actions being taken with regard to the discharge and the movement of the ship.

(c) *Shipboard spill mitigation procedures.* This section of the response plan must identify the vessel's total volumes of oil carried in bulk as cargo and meet the applicable requirements of this paragraph as in paragraph (a)(6) of this section.

(1) For vessels carrying 100 barrels or less of oil in bulk as cargo, the plan must include a basic emergency action checklist for vessel personnel including notification and actions to be taken to prevent or mitigate any discharge or substantial threat of such a discharge of oil from the vessel.

(2) For vessels carrying over 100 barrels of oil but not exceeding 5,000 barrels of oil in bulk as cargo, the plan must include—

(i) Detailed information on actions to be taken by vessel personnel to prevent or mitigate any discharge or substantial threat of such a discharge of oil from the vessel due to operational activities or casualties;

(ii) Detailed information on damage control procedures to be followed by vessel personnel;

(iii) Detailed procedures for internal or external transfer of oil in bulk as cargo in an emergency; and

(iv) Procedures for use of any equipment carried aboard the vessel for spill mitigation.

(3) For vessels carrying over 5,000 barrels of oil as a secondary cargo, the plan must provide the information required by §155.1035(c) for shipboard spill mitigation procedures.

(4) For all vessels, the plan must include responsibilities and actions to be taken by vessel personnel, if any, to initiate a response and supervise shore-based response resources.

(d) *Shore-based response activities.* This section of the response plan must include the following information:

(1) The qualified individual's responsibilities and authority, including immediate communication with the Federal on-scene coordinator and notification of the oil spill removal organization(s) identified in the plan.

(2) If applicable, procedures for transferring responsibility for direction of response activities from vessel personnel to the shore-based spill management team.

(3) The procedures for coordinating the actions of the vessel owner or operator with the actions of the predesignated Federal on-scene coordinator responsible for overseeing or directing those actions.

(4) The organizational structure that will be used to manage the response actions. This structure must include the following functional areas and must further include information for key components within each functional area:

(i) Command and control;

(ii) Public information;

(iii) Safety;

(iv) Liaison with government agencies;

(v) Spill response operations;

(vi) Planning;

(vii) Logistics support; and

(viii) Finance.

(5) The responsibilities, duties, and functional job description for each oil spill management team member within the organizational structure identified in paragraph (d)(4) of this section.

(e) *List of contacts.* The name, location, and 24-hour contact information for the following key individuals or organizations must be included in this section or, if more appropriate, in a geographic-specific appendix and referenced in this section:

(1) Vessel owner or operator, and if applicable, charterer.

(2) Qualified individual and alternate qualified individual for the vessel's area of operation.

(3) Vessel's local agent(s), if applicable, for the vessel's area of operation.

(4) Applicable insurance representatives or surveyors for the vessel's area of operation.

(5) Person(s) within the identified oil spill removal organization(s) to notify for activation of the oil spill removal organization(s) identified under paragraph (i)(3) of this section for the vessel's area of operation.

(6) Person(s) to notify for activation of the spill management team.

(f) *Training procedures.* (1) This section of the response plan must address the training procedures and programs of the vessel owner or operator. The vessel owner or operator shall ensure that—

(i) All personnel with responsibilities under the plan receive training in their assignments and refresher training as necessary, and participate in exercises required under paragraph (g) of this section. Documented work experience can be used instead of training; and

(ii) Records of this training are maintained aboard the vessel, at the U.S. location of the spill management team, or with the qualified individual. The plan must specify where the records are located.

(2) Nothing in this section relieves the vessel owner or operator from responsibility to ensure that all private shore-based response personnel are trained to meet the Occupational Safety and Health Administration (OSHA) standards for emergency response operations in 29 CFR 1910.120.

(g) *Exercise procedures.* This section of the response plan must address the exercise program carried out by the vessel owner or operator to evaluate the ability of vessel and shore-based personnel to perform their identified functions in the plan. The required exercise frequency for each category of vessel is as follows:

(1) For vessels carrying 100 barrels or less of oil as cargo—

(i) On board spill mitigation procedures and qualified individual notification exercises must be conducted annually; and

(ii) Shore-based oil spill removal organization exercises must be conducted biennially.

(2) For vessels carrying over 100 barrels and up to 5,000 barrels of oil in bulk as cargo—

(i) On board emergency procedures and qualified individual notification exercises must be conducted quarterly; and

(ii) Shore-based oil spill removal organization exercises must be conducted annually.

(3) Vessels carrying over 5,000 barrels of oil in bulk as cargo must meet the exercise requirement of § 155.1060.

(h) *Plan review, update, revision, amendment, and appeal procedures.* This section of the response plan must address—

(1) The procedures to be followed by the vessel owner or operator to meet the requirement of § 155.1070; and

(2) The procedures to be followed for any post-discharge review of the plan to evaluate and validate its effectiveness

(i) *Geographic-specific appendices for each COTP zone in which a vessel operates.* A geographic-specific appendix must be included for each COTP zone identified. The appendix must include the following information or identify the location of such information within the plan:

(1) Required Federal or State notifications applicable to the geographic areas in which a vessel operates.

(2) Identification of the qualified individuals.

(3) A list of the oil spill removal organization(s) and the spill management team(s) available to respond to the vessel's worst case oil discharge in each COTP zone in which a vessel operates. The oil spill removal organization(s) identified must be capable of commencing oil spill containment and on-water recovery within the response times listed for Tier 1 in § 155.1050(g); providing temporary storage of recovered oil; and conducting shoreline protection and cleanup operations. An oil spill removal organization may not be identified in the plan unless the organization has provided written consent to being identified in the plan as an available resource.

(j) *Appendices for vessel-specific information.* This section must include for each vessel covered by the plan the following information:

(1) List of the vessel's principal characteristics (i.e., length, beam, gross tonnage, etc.).

(2) Capacities of all cargo, fuel, lube oil, ballast, and fresh water tanks.

(3) The total volume and cargo groups of oil cargo that would be involved in the—

(i) Maximum most probable discharge; and

(ii) Worst case discharge.

(4) Diagrams showing location of all tanks.

(5) Cargo and fuel piping diagrams and pumping plan as applicable. These diagrams and plans can be maintained separately aboard the vessel providing the response plan identifies the location.

(6) Location of information on the name, description, physical and chemical characteristics, health and safety hazards, and spill and firefighting procedures for the oil cargo aboard the vessel. A material safety data sheet meeting the requirements of 29 CFR 1910.1200, cargo information required by

33 CFR 154.310, or the equivalent, will meet this requirement. This information can be maintained separately on board the vessel, providing the response plan identifies the location.

§155.1050 Response plan development and evaluation criteria for vessels carrying groups I through IV petroleum oil as a primary cargo.

(a) The following criteria must be used to evaluate the operability of response resources identified in the response plan for the specified operating environment:

(1) Table 1 of Appendix B of this part.

(i) The criteria in Table 1 of Appendix B of this part are to be used solely for identification of appropriate equipment in a response plan.

(ii) These criteria reflect conditions used for planning purposes to select mechanical response equipment and are not conditions that would limit response actions or affect normal vessel operations.

(2) Limitations that are identified in the Area Contingency Plans for the COTP zones in which the vessel operates, including—

(i) Ice conditions;

(ii) Debris;

(iii) Temperature ranges; and

(iv) Weather-related visibility.

(b) The COTP may reclassify a specific body of water or location within the COTP zone. Any reclassifications will be identified in the applicable Area Contingency Plan. Reclassifications may be to—

(1) A more stringent operating environment if the prevailing wave conditions exceed the significant wave height criteria during more than 35 percent of the year; or

(2) A less stringent operating environment if the prevailing wave conditions do not exceed the significant wave height criteria for the less stringent operating environment during more than 35 percent of the year.

(c) Response equipment must—

(1) Meet or exceed the criteria listed in Table 1 of Appendix B of this part;

(2) Be capable of functioning in the applicable operating environment; and

(3) Be appropriate for the petroleum oil carried.

(d) The owner or operator of a vessel that carries groups I through IV petroleum oil as a primary cargo shall identify in the response plan and ensure the availability of, through contract or other approved means, the response resources that will respond to a discharge up to the vessel's average most probable discharge.

(1) For a vessel that carries groups I through IV petroleum oil as its primary cargo, the response resources must include—

(i) Containment boom in a quantity equal to twice the length of the largest vessel involved in the transfer and capable of being deployed at the site of oil transfer operations—

(A) Within 1 hour of detection of a spill, when the transfer is conducted between 0 and 12 miles from the nearest shoreline; or

(B) Within 1 hour plus travel time from the nearest shoreline, based on an on-water speed of 5 knots, when the transfer is conducted over 12 miles up to 200 miles from the nearest shoreline; and

(ii) Oil recovery devices and recovered oil storage capacity capable of being at the transfer site—

(A) Within 2 hours of the detection of a spill during transfer operations, when the transfer is conducted between 0 and 12 miles from the nearest shoreline; or

(B) Within 1 hour plus travel time from the nearest shoreline, based on an on-water speed of 5 knots, when the transfer is conducted over 12 miles up to 200 miles from the nearest shoreline.

(2) For locations of multiple vessel transfer operations, a vessel may identify the same equipment as identified by other vessels, provided that each vessel has ensured access to the equipment through contract or other approved means. Under these circumstances, prior approval by the Coast Guard is not required for temporary changes in the contracted oil spill removal organization under §155.1070(c)(5).

(3) The owner or operator of a vessel conducting transfer operations at a facility required to submit a response plan under 33 CFR 154.1017 is required to plan for and identify the response resources required in paragraph (d)(1) of this section. However, the owner or operator is not required to ensure by

contract or other means the availability of such resources.

(e) The owner or operator of a vessel carrying groups I through IV petroleum oil as a primary cargo must identify in the response plan and ensure the availability of, through contract or other approved means, the response resources necessary to respond to a discharge up to the vessel's maximum most probable discharge volume.

(1) These resources must be positioned such that they can arrive at the scene of a discharge within—

(i) 12 hours of the discovery of a discharge in higher volume port areas and the Great Lakes;

(ii) 24 hours of the discovery of a discharge in all rivers and canals, inland, nearshore and offshore areas; and

(iii) 24 hours of the discovery of a discharge plus travel time from shore for open ocean areas.

(2) The necessary response resources include sufficient containment boom, oil recovery devices, and storage capacity for any recovery of up to the maximum most probable discharge planning volume.

(3) The response plan must identify the storage location, make, model, and effective daily recovery capacity of each oil recovery device that is identified for plan credit.

(4) The response resources identified for responding to a maximum most probable discharge must be positioned to be capable of meeting the planned arrival times in this paragraph. The COTP with jurisdiction over the area in which the vessel is operating must be notified whenever the identified response resources are not capable of meeting the planned arrival times.

(f) The owner or operator of a vessel carrying groups I through IV petroleum oil as a primary cargo must identify in the response plan and ensure the availability of, through contract or other approved means, the response resources necessary to respond to discharges up to the worst case discharge volume of the oil cargo to the maximum extent practicable.

(1) The location of these resources must be suitable to meet the response times identified for the applicable geographic area(s) of operation and response tier.

(2) The response resources must be appropriate for—

(i) The capacity of the vessel;

(ii) Group(s) of petroleum oil carried as cargo; and

(iii) The geographic area(s) of vessel operation.

(3) The resources must include sufficient boom, oil recovery devices, and storage capacity to recover the planning volumes.

(4) The response plan must identify the storage location, make, model, and effective daily recovery capacity of each oil recovery device that is identified for plan credit.

(5) The guidelines in Appendix B of this part must be used for calculating the quantity of response resources required to respond at each tier to the worst case discharge to the maximum extent practicable.

(6) When determining response resources necessary to meet the requirements of this paragraph (f)(6), a portion of those resources must be capable of use in close-to-shore response activities in shallow water. The following percentages of the response equipment identified for the applicable geographic area must be capable of operating in waters of 6 feet or less depth:

(i) Open ocean—none.

(ii) Offshore—10 percent.

(iii) Nearshore, inland, Great Lakes, and rivers and canals—20 percent.

(7) Response resources identified to meet the requirements of paragraph (f)(6) of this section are exempt from the significant wave height planning requirements of Table 1 of Appendix B of this part.

(g) Response equipment identified to respond to a worst case discharge must be capable of arriving on scene within the times specified in this paragraph for the applicable response tier in a higher volume port area, Great Lakes, and in other areas. Response times for these tiers from the time of discovery of a discharge are—

	Tier 1	Tier 2	Tier 3
Higher volume port area (except tankers in Prince William Sound covered by § 155.1135).	12 hrs	36 hrs	60 hrs
Great Lakes	18 hrs	42 hrs	66 hrs

	Tier 1	Tier 2	Tier 3
All other rivers & canals, inland, nearshore, and offshore areas.	24 hrs	48 hrs	72 hrs
Open ocean (plus travel time from shore).	24 hrs+	48 hrs+	72 hrs+

(h) For the purposes of arranging for response resources through contract or other approved means, response equipment identified for Tier 1 plan credit must be capable of being mobilized and enroute to the scene of a discharge within 2 hours of notification. The notification procedures identified in the plan must provide for notification and authorization for mobilization of identified Tier 1 response resources—

(1) Either directly or through the qualified individual; and

(2) Within 30 minutes of a discovery of a discharge or substantial threat of discharge.

(i) Response resources identified for Tier 2 and Tier 3 plan credit must be capable of arriving on scene within the time listed for the applicable tier.

(j) The response plan for a vessel carrying group II or III persistent petroleum oils as a primary cargo that operates in areas with year-round pre-approval for dispersant use may request a credit against up to 25% of the on-water oil recovery capability for each worst case discharge tier necessary to meet the requirements of this subpart. To receive this credit, the vessel owner or operator shall identify in the response plan and ensure, through contract or other approved means, the availability of the dispersants and the necessary resources to apply those agents appropriate for the type of oil carried and to monitor the effectiveness of the dispersants. The extent of the credit will be based on the volumes of dispersant available to sustain operations at manufacturers' recommended dosage rates. Dispersant resources identified for plan credit must be capable of being on scene within 12 hours of discovery of a discharge.

NOTE: Identification of these resources does not imply that they will be authorized for use. Actual authorization for use during a spill response will be governed by the provisions of the National Oil and Hazardous Substances Pollution Contingency Plan (40 CFR part 300) and the applicable Area Contingency Plan.

(k)(1) The owner or operator of a vessel carrying groups I through IV petroleum oil as a primary cargo must identify in the response plan and ensure the availability of, through contract or other approved means, the following resources:

(i) A salvage company with expertise and equipment.

(ii) A company with vessel firefighting capability that will respond to casualties in the area(s) in which the vessel will operate.

(2) Vessel owners or operators must identify intended sources of the resources required under paragraph (k)(1) of this section capable of being deployed to the areas in which the vessel will operate. Provider(s) of these services may not be listed in the plan unless they have provided written consent to be listed in the plan as an available resource.

(3) To meet this requirement in a response plan submitted for reapproval on or after February 18, 1998, the identified resources must be capable of being deployed to the port nearest to the area in which the vessel operates within 24 hours of notification.

(l) The owner or operator of a vessel carrying groups I through IV petroleum oil as a primary cargo must identify in the response plan and ensure the availability of, through contract or other approved means, certain response resources required by §155.1035(c)(5)(ii) or §155.1040(c)(5)(i), as appropriate.

(1) These resources must include—

(i) Fendering equipment;

(ii) Transfer hoses and connection equipment; and

(iii) Portable pumps and ancillary equipment necessary to offload the vessel's largest cargo tank in 24 hours of continuous operation.

(2) These resources must be capable of reaching the locations in which the vessel operates within the stated times following notification:

(i) Inland (except tankers in Prince William Sound covered by §155.1130), nearshore, and Great Lakes waters—12 hours.

(ii) Offshore waters and rivers and canals—18 hours.

(iii) Open ocean waters—36 hours.

(3) For barges operating on rivers and canals as defined in this subpart, the requirements of this paragraph (l)(3) may be met by listing resources capable of meeting the response times in paragraph (l)(2) of this section. Such resources may not be identified in a plan unless the response organization has provided written consent to be listed in a plan as an available resource.

(m) The owner or operator of a vessel carrying groups I through IV petroleum oil as a primary cargo must identify in the response plan and ensure the availability of, through contract or other approved means, response resources necessary to perform shoreline protection operations.

(1) The response resources must include the quantities of boom listed in Table 2 of Appendix B of this part, based on the areas in which the vessel operates.

(2) Vessels that intend to offload their cargo at the Louisiana Offshore Oil Port (LOOP) marine terminal are not required to comply with the requirements of this paragraph when they are within the offshore area and under one of the following conditions:

(i) Approaching or departing the LOOP marine terminal within the LOOP Shipping Safety Fairway, as defined in 33 CFR 166.200.

(ii) Moored at the LOOP marine terminal for the purposes of cargo transfer operations or anchored in the designated anchorage area awaiting discharge.

(n) The owner or operator of a vessel carrying groups I through IV petroleum oil as a primary cargo must identify in the response plan and ensure the availability of, through contract or other approved means, an oil spill removal organization capable of effecting a shoreline cleanup operation commensurate with the quantity of emulsified petroleum oil to be planned for in shoreline cleanup operations.

(1) The shoreline cleanup resources required must be determined as described in Appendix B of this part.

(2) Vessels that intend to offload their cargo at the Louisiana Offshore Oil Port (LOOP) marine terminal are not required to comply with the requirements of this paragraph when they are within the offshore area and under one of the following conditions:

(i) Approaching or departing the LOOP marine terminal within the LOOP Shipping Safety Fairway as defined in 33 CFR 166.200.

(ii) Moored at the LOOP marine terminal for the purposes of cargo transfer operations or anchored in the designated anchorage area awaiting discharge.

(o) Appendix B of this part sets out caps that recognize the practical and technical limits of response capabilities for which an individual vessel owner or operator can contract in advance. Table 6 in Appendix B lists the contracting caps that are applicable, as of February 18, 1993, and that are slated to apply on February 18, 1998. The owner or operator of a vessel carrying groups I through IV petroleum oil as a primary cargo, whose required daily recovery capacity exceeds the applicable contracting caps in Table 6, shall identify commercial sources of additional equipment equal to twice the cap listed for each tier or the amount necessary to reach the calculated planning volume, whichever is lower, to the extent that this equipment is available. The equipment so identified must be capable of arriving on scene no later than the applicable tier response times contained in § 155.1050(g) or as quickly as the nearest available resource permits. A response plan must identify the specific sources, locations, and quantities of this additional equipment. No contract is required.

(p) The Coast Guard will initiate a review of cap increases and other requirements contained within this subpart that are scheduled to be phased-in over time. Any changes in the requirements of this section will occur through a public notice and comment process.

(1) During this review, the Coast Guard will determine if the scheduled increase remains practicable, and will also establish a specific cap for 2003. The review will include—

(i) Increases in skimming efficiencies and design technology;

(ii) Oil tracking technology;

(iii) High rate response techniques;

(iv) Other applicable response technologies; and

(v) Increases in the availability of private response resources.

(2) All scheduled future requirements will take effect unless the Coast Guard determines that they are not practicable. Scheduled changes will be effective on February 18, 1998 and 2003 unless the review of the additional requirements have not been completed by the Coast Guard. If this occurs, the changes will not be effective until 90 days after publication of a FEDERAL REGISTER notice with the results of the review.

EFFECTIVE DATE NOTE: By USCG 98–3417, 63 FR 7071, Feb. 12, 1998, §155.1050, paragraph (k)(3), is suspended from Feb. 12, 1998 until Feb. 12, 2001.

§155.1052 Response plan development and evaluation criteria for vessels carrying group V petroleum oil as a primary cargo.

(a) Owners and operators of vessels that carry group V petroleum oil as a primary cargo must provide information in their plan that identifies—

(1) Procedures and strategies for responding to discharges up to a worst case discharge of group V petroleum oils to the maximum extent practicable; and

(2) Sources of the equipment and supplies necessary to locate, recover, and mitigate such a discharge.

(b) Using the criteria in Table 1 of Appendix B of this part, an owner or operator of a vessel carrying group V petroleum oil as a primary cargo must ensure that any equipment identified in a response plan is capable of operating in the conditions expected in the geographic area(s) in which the vessel operates. When evaluating the operability of equipment, the vessel owner or operator must consider limitations that are identified in the Area Contingency Plans for the COTP zones in which the vessel operates, including—

(1) Ice conditions;

(2) Debris;

(3) Temperature ranges; and

(4) Weather-related visibility.

(c) The owner or operator of a vessel carrying group V petroleum oil as a primary cargo must identify in the response plan and ensure, through contract or other approved means, the availability of required equipment, including—

(1) Sonar, sampling equipment, or other methods for locating the oil on the bottom or suspended in the water column;

(2) Containment boom, sorbent boom, silt curtains, or other methods for containing oil that may remain floating on the surface or to reduce spreading on the bottom;

(3) Dredges, pumps, or other equipment necessary to recover oil from the bottom and shoreline; and

(4) Other appropriate equipment necessary to respond to a discharge involving the type of oil carried.

(d) Response resources identified in a response plan under paragraph (c) of this section must be capable of being deployed within 24 hours of discovery of a discharge to the port nearest the area where the vessel is operating. An oil spill removal organization may not be listed in the plan unless the oil spill removal organization has provided written consent to be listed in the plan as an available resource.

(e) The owner or operator of a vessel carrying group V petroleum oil as a primary cargo shall identify in the response plan and ensure the availability of the following resources through contract or other approved means—

(1) A salvage company with appropriate expertise and equipment; and

(2) A company with vessel firefighting capability that will respond to casualties in the area(s) in which the vessel is operating.

(f) Vessel owners or operators must identify intended sources of the resources required under paragraph (e) of this section capable of being deployed to the areas in which the vessel will operate. A company may not be listed in the plan unless the company has provided written consent to be listed in the plan as an available resource. To meet this requirement in a response plan submitted for approval or reapproval on or after February 18, 1998, the vessel owner or operator must identify both the intended sources of this capability and demonstrate that the resources are capable of being deployed to the port nearest to the area where the vessel operates within 24 hours of discovery of a discharge.

(g) The owner or operator of a vessel carrying group V petroleum oil as a primary cargo shall identify in the response plan and ensure the availability of certain resources required by §§ 155.1035(c)(5)(ii) and 155.1040(c)(5)(i), as applicable, through contract or other approved means.

(1) Resources must include—

(i) Fendering equipment;

(ii) Transfer hoses and connection equipment; and

(iii) Portable pumps and ancillary equipment necessary to offload the vessel's largest cargo tank in 24 hours of continuous operation.

(2) Resources must be capable of reaching the locations in which the vessel operates within the stated times following notification:

(i) Inland, nearshore, and Great Lakes waters—12 hours.

(ii) Offshore waters and rivers and canals—18 hours.

(iii) Open ocean waters—36 hours.

(3) For barges operating in rivers and canals as defined in this subpart, the requirements of this paragraph (g)(3) may be met by listing resources capable of being deployed in an area within the response times in paragraph (g)(2) of this section. A vessel owner or operator may not identify such resources in a plan unless the response organization has provided written consent to be identified in a plan as an available resource.

EFFECTIVE DATE NOTE: By USCG 98–3417, 63 FR 7071, Feb. 12, 1998, § 155.1052, the last sentence in paragraph (f) is suspended from Feb. 12, 1998 until Feb. 12, 2001.

§ 155.1055 Training.

(a) A response plan submitted to meet the requirements of § 155.1035 must identify the training to be provided to persons having responsibilities under the plan, including members of the vessel crew, the qualified individual, and the spill management team. A response plan submitted to meet the requirements of § 155.1040 must identify the training to be provided to the spill management team, the qualified individual, and other personnel in § 155.1040 with specific responsibilities under the plan including tankermen and members of the towing vessel crew. The training program must differentiate between that training provided to vessel personnel and that training provided to shore-based personnel. Appendix C of this part provides additional guidance regarding training.

(b) A vessel owner or operator shall ensure the maintenance of records sufficient to document this training and make them available for inspection upon request by the Coast Guard. Records must be maintained for 3 years following completion of training. The response plan must identify the location of training records, which must be—

(1) On board the vessel;

(2) With the qualified individual; or

(3) At a U.S. location of the spill management team.

(c) A vessel owner or operator may identify equivalent work experience which fulfills specific training requirements.

(d) The vessel owner or operator shall ensure that any oil spill removal organization identified in a response plan to meet the requirements of this part maintains records sufficient to document training for the organization's personnel. These records must be available for inspection upon request by the Coast Guard. Records must be maintained for 3 years following completion of training.

(e) Nothing in this section relieves the vessel owner or operator from the responsibility to ensure that all private shore-based response personnel are trained to meet the Occupational Safety and Health Administration (OSHA) standards for emergency response operations in 29 CFR 1910.120.

(f) A training plan may be prepared in accordance with Training Elements for Oil Spill Response to satisfy the requirements of this section.

§ 155.1060 Exercises.

(a) A vessel owner or operator required by §§ 155.1035 and 155.1040 to have a response plan shall conduct exercise as necessary to ensure that the plan will function in an emergency. Both announced and unannounced exercises must be included. The following are the minimum exercise requirements for vessels covered by this subpart:

(1) Qualified individual notification exercises, which must be conducted quarterly;

(2) Emergency procedures exercises, which must be conducted quarterly;

(3) Shore-based spill management team tabletop exercises, which must be conducted annually. In a triennial period, at least one of these exercises must include a worst case discharge scenario;

(4) Oil spill removal organization equipment deployment exercises, which must be conducted annually; and

(5) An exercise of the entire response plan, which must be conducted every 3 years. The vessel owner or operator shall design the exercise program so that all components of the response plan are exercised at least once every 3 years. All of the components do not have to be exercised at one time; they may be exercised over the 3-year period through the required exercises or through an area exercise.

(b) Annually, at least one of the exercises listed in §155.1060(a) (2) and (4) must be unannounced. An unannounced exercise is one in which the personnel participating in the exercise have not been advised in advance of the exact date, time, and scenario of the exercise.

(c) A vessel owner or operator shall participate in unannounced exercises, as directed by the Coast Guard COTP. The objectives of the unannounced exercises will be to evaluate notifications and equipment deployment for responses to average most probable discharge spill scenarios outlined in vessel response plans. The unannounced exercises will be limited to four per area per year, an area being that geographic area for which a separate and distinct Area Contingency Plan has been prepared, as described in the Oil Pollution Act of 1990. After participating in an unannounced exercise directed by a COTP, the owner or operator will not be required to participate in another unannounced exercise for at least 3 years from the date of the exercise.

(d) A vessel owner or operator shall participate in area exercises as directed by the applicable on-scene coordinator. The area exercises will involve equipment deployment to respond to the spill scenario developed by the exercise design team, of which the vessel owner or operator will be a member. After participating in an area exercise, a vessel owner or operator will not be required to participate in another area exercise for at least 6 years.

(e) The vessel owner or operator shall ensure that adequate exercise records are maintained. The following records are required:

(1) On board the vessel, records of the qualified individual notification exercises and the emergency procedures exercises. These exercises may be documented in the ship's log or may be kept in a separate exercise log.

(2) At the United States' location of either the qualified individual, spill management team, the vessel owner or operator, or the oil spill removal organization, records of exercises conducted off the vessel. Response plans must indicate the location of these records.

(f) Records described in paragraph (e) of this section must be maintained and available to the Coast Guard for 3 years following completion of the exercises.

(g) The response plan submitted to meet the requirements of this subpart must specify the planned exercise program. The plan shall detail the exercise program, including the types of exercises, frequencies, scopes, objectives, and the scheme for exercising the entire response plan every 3 years.

(h) Compliance with the National Preparedness for Response Exercise Program (PREP) Guidelines will satisfy the vessel response plan exercise requirements. These guidelines are available from the United States Government Printing Office, North Capitol and H Sts., NW., Washington, DC 20402.

§155.1062 Inspection and maintenance of response resources.

(a) The owner or operator of a vessel required to submit a response plan under this part must ensure that—

(1) Containment booms, skimmers, vessels, and other major equipment listed or referenced in the plan are periodically inspected and maintained in

good operating condition, in accordance with manufacturer's recommendations and best commercial practices; and

(2) All inspections and maintenance are documented and that these records are maintained for 3 years.

(b) For equipment which must be inspected and maintained under this section the Coast Guard may—

(1) Verify that the equipment inventories exist as represented;

(2) Verify the existence of records required under this section;

(3) Verify that the records of inspection and maintenance reflect the actual condition of any equipment listed or referenced; and

(4) Inspect and require operational tests of equipment.

(c) This section does not apply to containment booms, skimmers, vessels, and other major equipment listed or referenced in the plan and ensured available through the written consent of an oil spill removal organization, as described in the definition of ''contract or other approved means'' at § 155.1020.

§ 155.1065 Procedures for plan submission, approval, requests for acceptance of alternative planning criteria, and appeal.

(a) An owner or operator of a vessel to which this subpart applies shall submit one complete English language copy of a vessel response plan to Commandant (G–MOR), Coast Guard, 2100 Second Street SW., Washington, DC 20593–0001. The plan must be submitted at least 60 days before the vessel intends to handle, store, transport, transfer, or lighter oil in areas subject to the jurisdiction of the United States.

(b) The owner or operator shall include a statement certifying that the plan meets the applicable requirements of subparts D, E, F, and G of this part and shall include a statement indicating whether the vessel(s) covered by the plan are manned vessels carrying oil as a primary cargo, unmanned vessels carrying oil as a primary cargo, or vessels carrying oil as a secondary cargo.

(c) If the Coast Guard determines that the plan meets all requirements of this subpart, the Coast Guard will notify the vessel owner or operator with an approval letter. The plan will be valid for a period of up to 5 years from the date of approval.

(d) If the Coast Guard reviews the plan and determines that it does not meet all of the requirements, the Coast Guard will notify the vessel owner or operator of the response plan's deficiencies. The vessel owner or operator must then resubmit the revised plan, or corrected portions of the plan, within the time period specified in the written notice provided by the Coast Guard.

(e) For those vessels temporarily authorized under § 155.1025 to operate without an approved plan pending formal Coast Guard approval, the deficiency provisions of § 155.1070(c), (d), and (e) will also apply.

(f) When the owner or operator of a vessel believes that national planning criteria contained elsewhere in this part are inappropriate to the vessel for the areas in which it is intended to operate, the owner or operator may request acceptance of alternative planning criteria by the Coast Guard. Submission of a request must be made 90 days before the vessel intends to operate under the proposed alternative and must be forwarded to the COTP for the geographic area(s) affected.

(g) An owner or operator of a United States flag vessel may meet the response plan requirements of Regulation 26 of MARPOL 73/78 and subparts D, E, F, and G of this part by stating in writing, according to the provisions of § 155.1030(j), that the plan submitted is intended to address the requirements of both Regulation 26 of MARPOL 73/78 and the requirements of subparts D, E, F, and G of this part.

(h) Within 21 days of notification that a plan is not approved, the vessel owner or operator may appeal that determination to the Assistant Commandant for Marine Safety and Environmental Protection. This appeal must be submitted in writing to Commandant (G–M), Coast Guard, 2100 Second Street SW., Washington, DC 20593–0001.

[CGD 91–034, 61 FR 1081, Jan. 12, 1996, as amended by CGD 96–026, 61 FR 33666, June 28, 1996; CGD 97–023, 62 FR 33364, June 19, 1997]

§155.1070 Procedures for plan review, revision, amendment, and appeal.

(a) A vessel response plan must be reviewed annually by the owner or operator.

(1) This review must occur within 1 month of the anniversary date of Coast Guard approval of the plan.

(2) The owner or operator shall submit any plan amendments to the Coast Guard for information or approval. Revisions to a plan must include a cover page that provides a summary of the changes being made and the pages being affected. Revised pages must further include the number of the revision and date of that revision.

(3) Any required changes must be entered in the plan and noted on the record of changes page. The completion of the annual review must also be noted on the record of changes page.

(b) The owner or operator of a vessel covered by subparts D, E, F, and G of this part shall resubmit the entire plan to the Coast Guard for approval—

(1) Six months before the end of the Coast Guard approval period identified in §155.1065(c); and

(2) Whenever there is a change in the owner or operator of the vessel, if that owner or operator provided the certifying statement required by §155.1065(b). If this change occurs, a new statement certifying that the plan continues to meet the applicable requirements of subparts D, E, F, and G of this part must be submitted.

(c) Revisions or amendments to an approved response plan must be submitted for approval by the vessel's owner or operator whenever there is—

(1) A change in the owner or operator of the vessel, if that owner or operator is not the one who provided the certifying statement required by §155.1065(b);

(2) A change in the vessel's operating area that includes ports or geographic area(s) not covered by the previously approved plan. A vessel may operate in an area not covered in a previously approved plan upon receipt of written acknowledgment by the Coast Guard that a new geographic-specific appendix has been submitted for approval by the vessel's owner or operator and the certification required in §155.1025(c) has been provided;

(3) A significant change in the vessel's configuration that affects the information included in the response plan;

(4) A change in the type of oil cargo carried aboard (oil group) that affects the required response resources, except as authorized by the COTP for purposes of assisting in an oil spill response activity;

(5) A change in the identification of the oil spill removal organization(s) or other response related resource required by §§155.1050, 155.1052, 155.1230, or 155.2230, as appropriate, except an oil spill removal organization required by §155.1050(d) which may be changed on a case by case basis for an oil spill removal organization previously classified by the Coast Guard which has been ensured available by contract or other approved means;

(6) A significant change in the vessel's emergency response procedures;

(7) A change in the qualified individual;

(8) The addition of a vessel to the plan. This change must include the vessel-specific appendix required by this subpart and the owner or operator's certification required in §155.1025(c); or

(9) Any other significant changes that affect the implementation of the plan.

(d) Thirty days in advance of operation, the owner or operator shall submit any revision or amendments identified in paragraph (c) of this section. The certification required in §155.1065(b) must be submitted along with the revisions or amendments.

(e) The Coast Guard may require a vessel owner or operator to revise a response plan at any time if it is determined that the response plan does not meet the requirements of this subpart. The Coast Guard will notify the vessel owner or operator in writing of any deficiencies and any operating restrictions. Deficiencies must be corrected and submitted for acceptance within the time period specified in the written notice provided by the Coast Guard or the plan will be declared invalid and any further storage, transfer, handling, transporting or lightering of oil in areas subject to the jurisdiction of the United States will be in violation of section 311(j)(5)(E) of the Federal Water

Pollution Control Act (FWPCA) (33 U.S.C. 1321(j)(5)(E)).

(f) A vessel owner or operator who disagrees with a deficiency determination may submit a petition for reconsideration to Assistant Commandant for Marine Safety and Environmental Protection, Commandant (G–M), Coast Guard Headquarters, 2100 Second Street, SW., Washington, DC 20593–0001 within the time period required for compliance or within 7 days from the date of receipt of the Coast Guard notice of a deficiency determination, whichever is less. After considering all relevant material presented, the Coast Guard will notify the vessel owner or operator of the final decision.

(1) Unless the vessel owner or operator petitions for reconsideration of the Coast Guard's decision, the vessel's owner or operator must correct the response plan deficiencies within the period specified in the Coast Guard's initial determination.

(2) If the vessel owner or operator petitions the Coast Guard for reconsideration, the effective date of the Coast Guard notice of deficiency determination may be delayed pending a decision by the Coast Guard. Petitions to the Coast Guard must be submitted in writing, via the Coast Guard official who issued the requirement to amend the response plan, within 5 days of receipt of the notice.

(g) Except as required in paragraph (c) of this section, amendments to personnel and telephone number lists included in the response plan do not require prior Coast Guard approval.

(h) The Coast Guard and all other holders of the response plan shall be advised of any revisions to personnel and telephone numbers and provided a copy of these revisions as they occur.

[CGD 91–034, 61 FR 1081, Jan. 12, 1996, as amended by CGD 96–026, 61 FR 33666, June 28, 1996; CGD 97–023, 62 FR 33364, June 19, 1997]

Subpart E—Additional Response Plan Requirements for Tankers Loading Cargo at a Facility Permitted Under the Trans-Alaska Pipeline Authorization Act

SOURCE: CGD 91–034, 61 FR 1097, Jan. 12, 1996, unless otherwise noted.

§ 155.1110 Purpose and applicability.

(a) This subpart establishes oil spill response planning requirements for an owner or operator of a tanker loading cargo at a facility permitted under the Trans-Alaska Pipeline Authorization Act (TAPAA) (43 U.S.C. 1651 *et seq.*) in Prince William Sound, Alaska, in addition to the requirements of subpart D of this part. The requirements of this subpart are intended for use in developing response plans and identifying response resources during the planning process, they are not performance standards.

(b) The information required in this subpart must be included in a Prince William Sound geographic-specific appendix to the vessel response plan required by subpart D of this part.

§ 155.1115 Definitions.

Except as provided in this section, the definitions in § 155.1020 apply to this subpart.

Prince William Sound means all State and Federal waters within Prince William Sound, Alaska, including the approach to Hinchinbrook Entrance out to and encompassing Seal Rock.

§ 155.1120 Operating restrictions and interim operating authorization.

The owner or operator of a tanker to which this subpart applies may not load cargo at a facility permitted under the Trans-Alaska Pipeline Authorization Act unless the requirements of this subpart and § 155.1025 have been met. The owner or operator of such a tanker shall certify to the Coast Guard that they have provided,

through an oil spill removal organization required by §155.1125, the necessary response resources to remove, to the maximum extent practicable, a worst case discharge or a discharge of 200,000 barrels of oil, whichever is greater, in Prince William Sound, AK.

§155.1125 Additional response plan requirements.

(a) The owner or operator of a tanker subject to this subpart shall include the requirements of this section in the Prince William Sound geographic-specific appendix required by subpart D of this part.

(1) The response plan must include identification of an oil spill removal organization that shall—

(i) Perform response activities;

(ii) Provide oil spill removal and containment training, including training in the operation of prepositioned equipment, for personnel, including local residents and fishermen, from the following locations in Prince William Sound—

(A) Valdez;

(B) Tatitlek;

(C) Cordova;

(D) Whittier;

(E) Chenega; and

(F) Fish hatcheries located at Port San Juan, Main Bay, Esther Island, Cannery Creek, and Solomon Gulch.

(iii) Consist of sufficient numbers of trained personnel with the necessary technical skills to remove, to the maximum extent practicable, a worst case discharge or a discharge of 200,000 barrels of oil, whichever is greater;

(iv) Provide a plan for training sufficient numbers of additional personnel to remove, to the maximum extent practicable, a worst case discharge or a discharge of 200,000 barrels of oil, whichever is greater; and

(v) Address the responsibilities required in §155.1035(d)(4).

(2) The response plan must include exercise procedures that must—

(i) Provide two exercises of the oil spill removal organization each year to ensure prepositioned equipment and trained personnel required under this subpart perform effectively;

(ii) Provide for both announced and unannounced exercises; and

(iii) Provide for exercises that test either the entire appendix or individual components.

(3) The response plan must identify a testing, inspection, and certification program for the prepositioned response equipment required in §155.1130 that must provide for—

(i) Annual testing and equipment inspection in accordance with the manufacturer's recommended procedures, to include—

(A) Start-up and running under load of all electrical motors, pumps, power packs, air compressors, internal combustion engines, and oil recovery devices; and

(B) Removal of no less than one-third of required boom from storage annually, such that all boom will have been removed and examined within a period of 3 years;

(ii) Records of equipment tests and inspection; and

(iii) Use of an independent entity to certify that the equipment is on-site and in good operating condition and that required tests and inspections have been performed. The independent entity must have appropriate training and expertise to provide this certification.

(4) The response plan must identify and give the location of the prepositioned response equipment required in §155.1130 including the make, model, and effective daily recovery rate of each oil recovery resource.

(b) The owner or operator shall submit to the COTP for approval, no later than September 30th of each calendar year, a schedule for the training and exercises required by the geographic-specific appendix for Prince William Sound for the following calendar year.

(c) All records required by this section must be available for inspection by the Coast Guard and must be maintained for a period of 3 years.

§155.1130 Requirements for prepositioned response equipment.

The owner or operator of a tanker subject to this subpart shall provide the following prepositioned response equipment, located within Prince William Sound, in addition to that required by §155.1035:

(a) On-water recovery equipment with a minimum effective daily recovery capacity of 30,000 barrels, capable of being on scene within 6 hours of notification of a discharge.

(b) On-water storage capacity of 100,000 barrels, capable of being on scene within 6 hours of notification of a discharge.

(c) Additional on-water recovery equipment with a minimum effective daily recovery capacity of 40,000 barrels capable of being on scene within 18 hours of notification of a discharge.

(d) On-water storage capacity of 300,000 barrels for recovered oily material, capable of being on scene within 24 hours of notification of a discharge.

(e) On-water oil recovery devices and storage equipment located in communities and at strategic locations.

(f) For sufficient protection of the environment in the locations identified in § 155.1125(a)(1)(ii)—

(1) Boom appropriate for the specific locations;

(2) Sufficient boats to deploy boom and sorbents;

(3) Sorbents including booms, sweeps, pads, blankets, drums and plastic bags;

(4) Personnel protective clothing and equipment;

(5) Survival equipment;

(6) First aid supplies;

(7) Buckets, shovels, and various other tools;

(8) Decontamination equipment;

(9) Shoreline cleanup equipment;

(10) Mooring equipment;

(11) Anchored buoys at appropriate locations to facilitate the positioning of defensive boom; and

(12) Other appropriate removal equipment for the protection of the environment as identified by the COTP.

(g) For each oil-laden tanker, an escorting response vessel which is fitted with skimming and on board storage capabilities practicable for the initial oil recovery planned for a cleanup operation, as identified by the oil spill removal organization.

(h) Lightering resources required in § 155.1050(l) capable of arriving on scene within 6 hours of notification of a discharge.

§ 155.1135 Response plan development and evaluation criteria.

For tankers subject to this subpart, the following response times must be used in determining the on-scene arrival time in Prince William Sound, for the response resources required by § 155.1050:

	Tier 1	Tier 2	Tier 3
Prince William Sound.	12 hrs	24 hrs	36 hrs

§ 155.1145 Submission and approval procedures.

An appendix prepared under this subpart must be submitted and approved in accordance with § 155.1065.

§ 155.1150 Plan revision and amendment procedures.

An appendix prepared and submitted under this subpart must be revised and amended, as necessary, in accordance with § 155.1070.

Subpart F—Response plan requirements for vessels carrying animal fats and vegetable oils as a primary cargo

SOURCE: CGD 91–034, 61 FR 1098, Jan. 12, 1996, unless otherwise noted.

§ 155.1210 Purpose and applicability.

This subpart establishes oil spill response planning requirements for an owner or operator of a vessel carrying animal fats and vegetable oils as a primary cargo. The requirements of this subpart are intended for use in developing response plans and identifying response resources during the planning process. They are not performance standards.

§ 155.1225 Response plan submission requirements.

An owner or operator of a vessel carrying animal fats and vegetable oils as a primary cargo shall submit a response plan in accordance with the requirements of this subpart, and with all sections of subpart D of this part, except §§ 155.1050 and 155.1052.

§155.1230 Response plan development and evaluation criteria.

(a) Owners and operators of vessels that carry animal fats or vegetable oils as a primary cargo must provide information in their plan that identifies—

(1) Procedures and strategies for responding to a worst case discharge of animal fats or vegetable oils to the maximum extent practicable; and

(2) Sources of the equipment and supplies necessary to contain, recover, and mitigate such a discharge.

(b) An owner or operator of a vessel carrying animal fats or vegetable oils as a primary cargo must ensure that any equipment identified in a response plan is capable of operating in the conditions expected in the geographic area(s) in which the vessel operates using the criteria in Table 1 of Appendix B of this part. When evaluating the operability of equipment, the vessel owner or operator must consider limitations that are identified in the Area Contingency Plans for the COTP zones in which the vessel operates, including—

(1) Ice conditions;

(2) Debris;

(3) Temperature ranges; and

(4) Weather-related visibility.

(c) The owner or operator of a vessel carrying animal fats or vegetable oils as a primary cargo must identify in the response plan and ensure, through contract or other approved means, the availability of required equipment including—

(1) Containment boom, sorbent boom, or other methods for containing oil floating on the surface or to protect shorelines from impact;

(2) Oil recovery devices appropriate for the type of animal fats or vegetable oils carried; and

(3) Other appropriate equipment necessary to respond to a discharge involving the type of animal fats or vegetable oils carried.

(d) Response resources identified in a response plan under paragraph (c) of this section must be capable of arriving on-scene within the applicable Tier 1 response times specified in this paragraph. An oil spill removal organization may not be listed in the plan unless the organization has provided written consent to be listed in the plan as an available resource. Response times from the time of discovery of a discharge are as follows:

	Tier 1	Tier 2	Tier 3
Higher volume port area.	12 hrs	N/A	N/A
Great Lakes	18 hrs	N/A	N/A
All other rivers and canals, inland, nearshore, and offshore areaas.	24 hrs	N/A	N/A
Open ocean (plus travel time from shore).	24 hrs+	N/A	N/A

(e) The owner or operator of a vessel carrying animal fats or vegetable oils as a primary cargo must identify in the response plan and ensure the availability of the following resources through contract or other approved means:

(1) A salvage company with appropriate expertise and equipment.

(2) A company with vessel firefighting capability that will respond to casualties in the area(s) in which the vessel is operating.

(f) Vessel owners or operators must identify intended sources of the resources required under paragraph (e) of this section capable of being deployed to the areas in which the vessel will operate. A company may not be listed in the plan unless the company has provided written consent to be listed in the plan as an available resource. To meet this requirement in a response plan submitted for approval or reapproval on or after February 18, 1998, the vessel owner or operator must identify both the intended sources of this capability and demonstrate that the resources are capable of being deployed to the port nearest to the area where the vessel operates within 24 hours of discovery of a discharge.

(g) The owner or operator of a vessel carrying animal fats or vegetable oils as a primary cargo must identify in the response plan, and ensure the availability of, through contract or other approved means, certain resources required by subpart D, §155.1035(c)(5)(ii) and §155.1040(c)(5)(i), as applicable.

(1) Resources must include—

(i) Fendering equipment;

(ii) Transfer hoses and connection equipment; and

(iii) Portable pumps and ancillary equipment necessary to offload the vessel's largest cargo tank in 24 hours of continuous operation.

(2) Resources must be capable of reaching the locations in which the vessel operates within the stated times following notification:

(i) Inland, nearshore, and Great Lakes waters—12 hours.

(ii) Offshore waters and rivers and canals—18 hours.

(iii) Open ocean waters—36 hours.

(3) For barges operating in rivers and canals as defined in this subpart, the requirements of this paragraph (g)(3) may be met by listing resources capable of being deployed in an area within the response times in paragraph (g)(2) of this section. A vessel owner or operator may not identify such resources in a plan unless the response organization has provided written consent to be identified in a plan as an available resource.

(h) The response plan for a vessel that is located in any environment with year-round preapproval for use of dispersants suitable for animal fats and vegetable oils and that handles, stores, or transports animal fats or vegetable oils may request a credit for up to 25 percent of the worst case planning volume set forth by subpart D of this part. To receive this credit, the vessel owner or operator must identify in the plan and ensure, by contract or other approved means, the availability of specified resources to apply the dispersants and to monitor their effectiveness. To extent of the credit will be based on the volumes of the dispersant available to sustain operations at the manufacturers' recommended dosage rates. Other spill mitigation techniques, including mechanical dispersal, may be identified in the response plan, provided they are in accordance with the NCP and the applicable ACP. Resources identified for plan credit should be capable of being on scene within 12 hours of a discovery of a discharge. Identification of these resources does not imply that they will be authorized for use. Actual authorization for use during the spill response will be governed by the provisions of the NCP and the applicable ACP.

Subpart G—Response Plan Requirements for Vessels Carrying Other Non-Petroleum Oils as a Primary Cargo

SOURCE: CGD 91–034, 61 FR 1099, Jan. 12, 1996, unless otherwise noted.

§ 155.2210 Purpose and applicability.

This subpart establishes oil spill response planning requirements for an owner or operator of a vessel carrying other non-petroleum oils as a primary cargo. The requirements of this subpart are intended for use in developing response plans and identifying response resources during the planning process. They are not performance standards.

§ 155.2225 Response plan submission requirements.

An owner or operator of a vessel carrying other non-petroleum oils as a primary cargo shall submit a response plan in accordance with the requirements of this subpart, and with all sections of subpart D of this part, except §§ 155.1050 and 155.1052.

§ 155.2230 Response plan development and evaluation criteria.

(a) Owners and operators of vessels that carry other non-petroleum oil as a primary cargo must provide information in their plan that identifies—

(1) Procedures and strategies for responding to a worst case discharge of other non-petroleum oils to the maximum extent practicable; and

(2) Sources of the equipment and supplies necessary to contain, recover, and mitigate such a discharge.

(b) An owner or operator of a vessel carrying other non-petroleum oil as a primary cargo must ensure that any equipment identified in a response plan is capable of operating in the conditions expected in the geographic area(s) in which the vessel operates using the criteria in Table 1 of Appendix B of this part. When evaluating the operability of equipment, the vessel owner or operator must consider limitations that are identified in the Area Contingency Plans for the COTP zones in which the vessel operates, including—

(1) Ice conditions;

(2) Debris;

(3) Temperature ranges; and

(4) Weather-related visibility.

(c) The owner or operator of a vessel carrying other non-petroleum oil as a primary cargo must identify in the response plan and ensure, through contract or other approved means, the availability of required equipment including—

(1) Containment boom, sorbent boom, or other methods for containing oil floating on the surface or to protect shorelines from impact;

(2) Oil recovery devices appropriate for the type of other non-petroleum oil carried; and

(3) Other appropriate equipment necessary to respond to a discharge involving the type of other non-petroleum oil carried.

(d) Response resources identified in a response plan under paragraph (c) of this section must be capable of arriving on-scene within the applicable Tier 1 response times specified in this paragraph. An oil spill removal organization may not be listed in the plan unless the organization has provided written consent to be listed in the plan as an available resource. Response times from the time of discovery of a discharge are as follow:

	Tier 1	Tier 2	Tier 3
Higher volume port area.	12 hrs	N/A	N/A
Great Lakes	18 hrs	N/A	N/A
All other rivers and canals, inland, nearshore, and offshore areas.	24 hrs	N/A	N/A
Open ocean (plus travel time from shore).	24 hrs+	N/A	N/A

(e) The owner or operator of a vessel carrying other non-petroleum oil as a primary cargo must identify in the response plan and ensure the availability of the following resources through contract or other approved means:

(1) A salvage company with appropriate expertise and equipment.

(2) A company with vessel firefighting capability that will respond to casualties in the area(s) in which the vessel is operating.

(f) Vessel owners or operators must identify intended sources of the resources required under paragraph (e) of this section capable of being deployed to the areas in which the vessel will operate. A company may not be listed in the plan unless the company has provided written consent to be listed in the plan as an available resource. To meet this requirement in a response plan submitted for approval or reapproval on or after February 18, 1998, the vessel owner or operator must identify both the intended sources of this capability and demonstrate that the resources are capable of being deployed to the port nearest to the area where the vessel operates within 24 hours of discovery of a discharge.

(g) The owner or operator of a vessel carrying other non-petroleum oil as a primary cargo must identify in the response plan, and ensure the availability of, through contract or other approved means, certain resources required by subpart D of this part, § 155.1035(c)(5)(ii) and § 155.1040(c)(5)(i) of this part, as applicable.

(1) Resources must include—

(i) Fendering equipment;

(ii) Transfer hoses and connection equipment; and

(iii) Portable pumps and ancillary equipment necessary to offload the vessel's largest cargo tank in 24 hours of continuous operation.

(2) Resources must be capable of reaching the locations in which the vessel operates within the stated times following notification:

(i) Inland, nearshore, and Great Lakes waters—12 hours.

(ii) Offshore waters and rivers and canals—18 hours.

(iii) Open ocean waters—36 hours.

(3) For barges operating in rivers and canals as defined in this subpart, the requirements of this paragraph (g)(3) may be met by listing resources capable of being deployed in an area within the response times in paragraph (g)(2) of this section. A vessel owner or operator may not identify such resources in a plan unless the response organization has provided written consent to be identified in a plan as an available resource.

(h) The response plan for a vessel that is located in any environment with year-round preapproval for use of dispersants and that handles, stores, or transports other non-petroleum oils

may request a credit for up to 25 percent of the worst case planning volume set forth by subpart D of this part. To receive this credit, the vessel owner or operator must identify in the plan and ensure, by contract or other approved means, the availability of specified resources to apply the dispersants and to monitor their effectiveness. The extent of the credit will be based on the volumes of the dispersant available to sustain operations at the manufacturers' recommended dosage rates. Identification of these resources does not imply that they will be authorized for use. Actual authorization for use during a spill response will be governed by the provisions of the NCP and the applicable ACP.

APPENDIX A TO PART 155—SPECIFICATIONS FOR SHORE CONNECTION

[See §§ 340, 350, 370 and 380 of this Part]

Item	Description	Dimension
1	Outside diameter.	215 mm. (8 in.).
2	Inside diameter	According to pipe outside diameter.
3	Bolt circle diameter.	183 mm. (7 3/16 in.).
4	Slots in flange	6 holes 22 mm. (7/8 in.) in diameter shall be equidistantly placed on a bolt circle of the above diameter, slotted to the flange periphery. The slot width is to be 22 mm. (7/8 in.).
5	Flange thickness.	20 mm. (3/4 in.).
6	Bolts and nuts	6, each of 20 mm. (3/4 in.) in diameter and of suitable length.

The flange must be of steel having a flat face, with a gasket of oilproof material, and must be suitable for a service pressure of 6 kg./cm.2 (85 p.s.i.).

The steel materials used must meet the material specifications of standard B16.5, Steel Pipe Flanges and Flanged Fittings of the American National Standards Institute. (See § 154.106 of this chapter.)

[CGD 75–124, 45 FR 7176, Jan. 31, 1980]

APPENDIX B TO PART 155—DETERMINING AND EVALUATING REQUIRED RESPONSE RESOURCES FOR VESSEL RESPONSE PLANS

1. Purpose

1.1 The purpose of this appendix is to describe the procedures for identifying response resources to meet the requirements of subparts D, E, F, and G of this part. These guidelines will be used by the vessel owner or operator in preparing the response plan and by the Coast Guard to review vessel response plans. Response plans submitted under subparts F and G of this part will be evaluated under the guidelines in section 2 and Table 1 of this appendix.

2. Equipment Operability and Readiness

2.1 All equipment identified in a response plan must be capable of operating in the conditions expected in the geographic area in which a vessel operates. These conditions vary widely based on the location and season. Therefore, it is difficult to identify a single stockpile of response equipment that will function effectively in every geographic location.

2.2 Vessels storing, handling, or transporting oil in more than one operating environment as indicated in Table 1 must identify equipment capable of successfully functioning in each operating environment. For example, vessels moving from the ocean to a river port must identify appropriate equipment designed to meet the criteria for transiting oceans, inland waterways, rivers, and canals. This equipment may be designed to operate in all of these environments or, more likely, different equipment may be designed for use in each area.

2.3 When identifying equipment for response plan credit, a vessel owner or operator must consider the inherent limitations in the operability of equipment components and response systems. The criteria in Table 1 of this appendix must be used for evaluating the operability in a given environment. These criteria reflect the general conditions in certain operating areas.

2.4 Table 1 of this appendix lists criteria for oil recovery devices and boom. All other equipment necessary to sustain or support response operations in a geographic area must be designed to function in the same conditions. For example, boats which deploy or support skimmers or boom must be capable of being safely operated in the significant wave heights listed for the applicable operating environment. The Coast Guard may require documentation that the boom identified in a response plan meets the criteria in Table 1 of this appendix. Absent acceptable documentation, the Coast Guard may require that the boom be tested to demonstrate that it meets the criteria in Table 1 of this appendix. Testing must be in accordance with certain American Society for Testing Materials (ASTM) standards [ASTM F 715–81 (Reapproved 1986), Standard Methods of Testing Spill Control Barrier Membrane Materials, and ASTM F 989–86, Standard Test Methods for Spill Control Barrier Tension Members], or other tests approved by the Coast Guard.

2.5 A vessel owner or operator must refer to the applicable Area Contingency Plan to determine if ice, debris, and weather-related visibility are significant factors in evaluating the operability of equipment. The Area

Contingency Plan will also identify the average temperature ranges expected in a geographic area in which a vessel operates. All equipment identified in a response plan must be designed to operate within those conditions or ranges.

2.6 The requirements of subparts D, E, F, and G of this part establish response resource mobilization and response times. The location that the vessel operates farthest from the storage location of the response resources must be used to determine whether the resources are capable of arriving on scene within the time required. A vessel owner or operator shall include the time for notification, mobilization, and travel time of resources identified to meet the maximum most probable discharge and Tier 1 worst case discharge requirements. For subparts D and E of this part, tier 2 and 3 resources must be notified and mobilized as necessary to meet the requirements for arrival on scene. An on-water speed of 5 knots and a land speed of 35 miles per hour is assumed, unless the vessel owner or operator can demonstrate otherwise.

2.7 For subparts D and E of this part, in identifying equipment, the vessel owner or operator shall list the storage location, quantity, and manufacturer's make and model, unless the oil spill removal organization(s) providing the necessary response resources have been evaluated by the Coast Guard, and their capability has been determined to equal or exceed the response capability needed by the vessel. For oil recovery devices, the effective daily recovery capacity, as determined using section 6 of this appendix, must be included. For boom, the overall boom height (draft plus freeboard) must be included. A vessel owner or operator is responsible for ensuring that identified boom has compatible connectors.

2.8 For subparts F and G of this part, in identifying equipment, the vessel owner or operator shall list the storage location, quantity, and manufacturer's make and model, unless the oil spill removal organization(s) providing the necessary response resources have been evaluated by the Coast Guard, and their capability has been determined to equal or exceed the response capability needed by the vessel. For boom, the overall boom height (draft plus freeboard) must be included. A vessel owner of operator is responsible for ensuring that identified boom has compatible connectors.

3. Determining Response Resources Required for the Average Most Probable Discharge

3.1 A vessel owner or operator shall identify and ensure, by contract or other approved means, that sufficient response resources are available to respond to the 50-barrel average most probable discharge at the point of an oil transfer involving a vessel that carries oil as a primary cargo. The equipment must be designed to function in the operating environment at the point of oil transfer. These resources must include—

3.1.1 Containment boom in a quantity equal to twice the length of the largest vessel involved in the transfer capable of being deployed within 1 hour of the detection of a spill at the site of oil transfer operations. If the transfer operation is more than 12 miles from shore, the containment boom must be deployed within 1 hour plus the travel time from the nearest shoreline at a speed of 5 knots.

3.1.2 Oil recovery devices with an effective daily recovery capacity of 50 barrels or greater available at the transfer site within 2 hours of the detection of an oil discharge.

3.1.3 Oil storage capacity for recovered oily material indicated in section 9.2 of this appendix.

4. Determining Response Resources Required for the Maximum Most Probable Discharge

4.1 A vessel owner or operator shall identify and ensure, by contract or other approved means, that sufficient response resources are available to respond to discharges up to the maximum most probable discharge volume for that vessel. The resources should be capable of containing and collecting up to 2,500 barrels of oil. All equipment identified must be designed to operate in the applicable operating environment specified in table 1 of this appendix.

4.2 To determine the maximum most probable discharge volume to be used for planning, use the lesser of—

4.2.1 2500 barrels; or

4.2.2 10 percent of the total oil cargo capacity.

4.3 Oil recovery devices necessary to meet the applicable maximum most probable discharge volume planning criteria must be located such that they arrive on scene within 12 hours of the discovery of a discharge in higher volume port areas and the Great Lakes, 24 hours in all other rivers and canals, inland, nearshore, and offshore areas, and 24 hours plus travel time from shore in all open ocean areas.

4.3.1 Because rapid control, containment, and removal of oil is critical to reduce spill impact, the effective daily recovery capacity for oil recovery devices must equal 50% of the planning volume applicable for the vessel as determined in section 4.2 of this appendix. The effective daily recovery capacity for oil recovery devices identified in the plan must be determined using the criteria in section 6 of this appendix.

4.4 In addition to oil recovery capacity, the vessel owner or operator must identify in the response plan and ensure the availability of, through contract or other approved means, sufficient boom available within the required response times for oil connection and containment, and for protection of

shoreline areas. While the regulation does not set required quantities of boom for oil collection and containment, the owner or operator of a vessel must still identify in a response plan and ensure, through contract or other approved means, the availability of the boom identified in the plan for this purpose.

4.5 The plan must indicate the availability of temporary storage capacity to meet the requirements of section 9.2 of this appendix. If available storage capacity is insufficient to meet this requirement, the effective daily recovery capacity must be downgraded to the limits of the available storage capacity.

4.6 The following is an example of a maximum most probable discharge volume planning calculation for equipment identification in a higher volume port area:

The vessel's cargo capacity is 10,000 barrels, thus the planning volume is 10 percent or 1,000 barrels. The effective daily recovery capacity must be 50 percent of the planning volume, for 500 barrels per day. The ability of oil recovery devices to meet this capacity will be calculated using the procedures in section 6 of this appendix. Temporary storage capacity available on scene must equal twice the daily recovery capacity as indicated in section 9 of this appendix, or 1000 barrels per day. This figure would represent the information the vessel owner or operator would use to identify and ensure the availability of, through contract or other approved means, the required response resources. The vessel owner would also need to identify how much boom was available for use.

5. Determining Response Resources Required for the Worst Case Discharge to the Maximum Extent Practicable

5.1 A vessel owner or operator shall identify and ensure, by contract or other approved means, that sufficient response resources are available to respond to the worst case discharge of oil cargo to the maximum extent practicable. Section 7 of this appendix describes the method to determine the required response resources.

5.2 Oil spill recovery devices identified to meet the applicable worst case discharge planning volume must be located such that they can arrive at the scene of a discharge within the time specified for the applicable response tier listed in §155.1050(g).

5.3 The effective daily recovery capacity for oil recovery devices identified in a response plan must be determined using the criteria in section 6 of this appendix. A vessel owner or operator shall identify the storage locations of all equipment that must be used to fulfill the requirements for each tier.

5.4 A vessel owner or operator shall identify the availability of temporary storage capacity to meet the requirements of section 9.2 of this appendix. If available storage capacity is insufficient to meet this requirement, then the effective daily recovery capacity must be downgraded to the limits of the available storage capacity.

5.5 When selecting response resources necessary to meet the response plan requirements, the vessel owner or operator must ensure that a portion of those resources are capable of being used in close-to-shore response activities in shallow water. The following percentages of the on-water response equipment identified for the applicable geographic area must be capable of operating in waters of 6 feet or less depth:

(i) Open ocean—none.

(ii) Offshore—10 percent.

(iii) Nearshore, inland, Great Lakes, and rivers and canals—20 percent.

5.6 In addition to oil spill recovery devices and temporary storage capacity, a vessel owner or operator shall identify in the response plan and ensure the availability of, through contract or other approved means, sufficient boom that can arrive on scene within the required response times for oil containment and collection. The specific quantity of boom required for collection and containment will depend on the specific recovery equipment and strategies employed. Table 2 of this appendix lists the minimum quantities of additional boom required for shoreline protection that a vessel owner or operator shall identify in the response plan and ensure the availability of, through contract or other approved means.

5.7 A vessel owner or operator shall also identify in the response plan and ensure, by contract or other approved means, the availability of an oil spill removal organization capable of responding to a shoreline cleanup operation involving the calculated volume of emulsified oil that might impact the affected shoreline. The volume of oil for which a vessel owner or operator should plan should be calculated through the application of factors contained in Tables 3 and 4 of this appendix. The volume calculated from these tables is intended to assist the vessel owner or operator in identifying a contractor with sufficient resources. This planning volume is not used explicitly to determine a required amount of equipment and personnel.

6. Determining Effective Daily Recovery Capacity for Oil Recovery Devices

6.1 Oil recovery devices identified by a vessel owner or operator must be identified by manufacturer, model, and effective daily recovery capacity. These capacities must be to meet the applicable planning criteria for the average most probable discharge; maximum most probable discharge; and worst case discharge to the maximum extent practicable.

6.2 For the purposes of determining the effective daily recovery capacity of oil recovery devices, the following method will be

used. This method considers potential limitations due to available daylight, weather, sea state, and percentage of emulsified oil in the recovered material. The Coast Guard may assign a lower efficiency factor to equipment listed in a response plan if it determines that such a reduction is warranted.

6.2.1 The following formula must be used to calculate the effective daily recovery capacity:

$R=T\times24\times E$

R—Effective daily recovery capacity

T—Throughput rate in barrels per hour (nameplate capacity)

E—20% efficiency factor (or lower factor as determined by the Coast Guard)

6.2.2 For those devices in which the pump limits the throughput of liquid, throughput rate will be calculated using the pump capacity.

6.2.3 For belt or mop type devices, the throughput rate will be calculated using data provided by the manufacturer on the nameplate rated capacity for the device.

6.2.4 Vessel owners or operators including in the response plan oil recovery devices whose throughput is not measurable using a pump capacity or belt or mop capacity may provide information to support an alternative method of calculation. This information must be submitted following the procedures in section 6.5 of this appendix.

6.3 As an alternative to section 6.2 of this appendix, a vessel owner or operator may submit adequate evidence that a different effective daily recovery capacity should be applied for a specific oil recovery device. Adequate evidence is actual verified performance data in spill conditions or test using certain ASTM standards [ASTM F 631–80, Reapproved 1985) Standard Method for Testing Full Scale Advancing Spill Removal Devices, and ASTM F 808–83 (1988), Standard Guide for Collecting Skimmer Performance Data in Uncontrolled Environments], or an equivalent test approved by the Coast Guard.

6.3.1 The following formula must be used to calculate the effective daily recovery capacity under this alternative:

$R=D\times U$

R—Effective daily recovery capacity

D—Average Oil Recovery Rate in barrels per hour (Item 26 in ASTM F 808; Item 13.1.15 in ASTM F 631; or actual performance data)

U—Hours per day that a vessel owner or operator can document capability to operate equipment under spill conditions. Ten hours per day must be used unless a vessel owner or operator can demonstrate that the recovery operation can be sustained for longer periods.

6.4 A vessel owner or operator submitting a response plan shall provide data that supports the effective daily recovery capacities for the oil recovery devices listed. The following is an example of these calculations:

A weir skimmer identified in a response plan has a manufacturer's rated throughput at the pump of 267 gallons per minute (gpm).

267 gpm=381 barrels per hour

$R=381\times24\times.2=1,829$ barrels per day

After testing using ASTM procedures, the skimmer's oil recovery rate is determined to be 220 gpm. The vessel owner or operator identifies sufficient resources available to support operations 12 hours per day.

220 gpm=314 barrels per hour

$R=314\times12=3,768$ barrels per day

A vessel owner or operator will be able to use the higher capacity if sufficient temporary oil storage capacity is available.

6.5 Determinations of alternative efficiency factors under section 6.2 or alternative effective daily recovery capacities under section 6.3 of this appendix will be made by Commandant (G–MOR), Coast Guard Headquarters, 2100 Second Street SW., Washington, DC 20593. Oil spill removal organizations or equipment manufacturers may submit required information on behalf of multiple vessel owners or operators.

7. Calculating the Worst Case Discharge Planning Volumes

7.1 A vessel owner or operator shall plan for a response to a vessel's worst case discharge volume of oil cargo. The planning for on-water recovery must take into account a loss of some oil to the environment due to evaporations and natural dissipation, potential increases in volume due to emulsification, and the potential for deposit of some oil on the shoreline.

7.2 The following procedures must be used to calculate the planning volume used by a vessel owner or operator for determining required on-water recovery capacity:

7.2.1 The following must be determined: the total volume of oil cargo carried; the appropriate cargo group for the type of petroleum oil carried [persistent (groups II, III, and IV) or non-persistent (group I)]; and the geographic area(s) in which the vessel operates. For vessels carrying mixed cargoes from different petroleum oil groups, each group must be calculated separately. This information is to be used with Table 3 of this appendix to determine the percentages of the total cargo volume to be used for removal capacity planning. This table divides the cargo volume into three categories: oil lost to the environment; oil deposited on the shoreline; and oil available for on-water recovery.

7.2.2 The on-water oil recovery volume must be adjusted using the appropriate emulsification factor found in Table 4 of this appendix.

7.2.3 The adjusted volume is multiplied by the on-water oil recovery resource mobilization factor found in Table 5 of this appendix from the appropriate operating area and response tier to determine the total on-water oil recovery capacity in barrels per day that must be identified or contracted for to arrive on scene within the applicable time for each response tier. Three tiers are specified. For higher volume port areas, the contracted tiers of resources must be located such that they can arrive on scene within 12, 36, and 60 hours of the discovery of an oil discharge. For the Great Lakes, these tiers are 18, 42, and 66 hours. For rivers and canals, inland, nearshore, and offshore, these tiers are 24, 48, and 72 hours. For the open ocean area, these tiers are 24, 48, and 72 hours with an additional travel time allowance of 1 hour for every additional 5 nautical miles from shore.

7.2.4 The resulting on-water recovery capacity in barrels per day for each tier is used to identify response resources necessary to sustain operations in the applicable geographic area. The equipment must be capable of sustaining operations for the time period specified in Table 3 of this appendix. A vessel owner or operator shall identify and ensure the availability of, through contract or other approved means, sufficient oil spill recovery devices to provide the effective daily oil recovery capacity required. If the required capacity exceeds the applicable cap described in Table 6 of this appendix, then a vessel owner or operator must contract only for the quantity of resources required to meet the cap, but shall identify sources of additional resources as indicated in § 155.1050(o). The owner or operator of a vessel whose planning volume exceeded the cap in 1993 should plan for additional capacity to be under contract by 1998 or 2003, as appropriate. For a vessel that carries multiple groups of oil, the required effective daily recovery capacity for each group is calculated and summed before applying the cap.

7.3 The following procedures must be used to calculate the planning volume for identifying shoreline cleanup capacity:

7.3.1 The following must be determined: the total volume of oil cargo carried; the appropriate cargo group for the type of petroleum oil carried [persistent (groups II, III, and IV) or non-persistent (group I)]; and the geographic area(s) in which the vessel operates. For a vessel carrying cargoes from different oil groups, each group must be calculated separately. Using this information, Table 3 of this appendix must be used to determine the percentages of the total cargo volume to be used for shoreline cleanup resource planning.

7.3.2 The shoreline cleanup planning volume must be adjusted to reflect an emulsification factor using the same procedure as described in section 7.2.2 of this appendix.

7.3.3 The resulting volume will be used to identify an oil spill removal organization with the appropriate shoreline cleanup capability.

7.4 The following is an example of the procedure described above:

A vessel with a 100,000 barrel capacity for #6 oil (specific gravity .96) will move from a higher volume port area to another area. The vessel's route will be 70 miles from shore.

Cargo carried: 100,000 bbls. Group IV oil Emulsification factor (from Table 4 of this appendix): 1.4 Areas transited: Inland, Nearshore, Offshore, Open ocean

Planned % on-water recovery (from Table 3 of this appendix):
Inland 50%
Nearshore 50%
Offshore 40%
Open ocean 20%

Planned % oil onshore recovery (from Table 3 of this appendix):
Inland 70%
Nearshore 70%
Offshore 30%
Open ocean 30%

General formula to determine planning volume:
(planning volume)=(capacity)×(% from Table 3 of this appendix)×(emulsification factor from Table 4 of this appendix)

Planning volumes for on-water recovery:
Inland 100,000×.5×1.4=70,000 bbls
Nearshore 100,000×.5×1.4=70,000 bbls
Offshore 100,000×.4×1.4=56,000 bbls
Open ocean 100,000×.2×1.4=28,000 bbls

Planning volumes for on shore recovery:
Inland 100,000×.7×1.4=98,000 bbls
Nearshore 100,000×.7×1.4=98,000 bbls
Offshore 100,000×.3×1.4=42,000 bbls
The vessel owner or operator must contract with a response resource capable of managing a 98,000-barrel shoreline cleanup in those areas where the vessel comes closer than 50 miles to shore.

Determining required resources for on-water recovery for each tier using mobilization factors: (barrel per day on-water recovery requirements)=(on-water planning volume as calculated above)×(mobilization factor from Table 5 of this appendix).

		Tier 1	Tier 2	Tier 3
Inland/Nearshore 70,000	×	.15	.25	.40
Offshore 56,000	×	.10	.165	.21
Open ocean 28,000	×	.06	.10	.12
equals (barrels per day)				
Inland/Nearshore		10,500	17,500	28,000

	Tier 1	Tier 2	Tier 3
Offshore	5,600	9,240	11,760
Open ocean	1,680	2,800	3,360

Since the requirements for Tier 1 for inland and nearshore exceed the caps, the vessel owner would only need to contract for 10,000 barrels per day for Tier 1. No additional equipment would be required to be identified because the required Tier 3 resources are below the Tier 3 caps.

10% of the on-water recovery capability for offshore, and 20% of the capability for inland/nearshore, for all tiers, must be capable of operating in water with a depth of 6 feet or less.

The vessel owner or operator would also be required to identify or contract for quantities of boom identified in Table 2 of this appendix for the areas in which the vessel operates.

8. Determining the Availability of High-Rate Response Methods

8.1 Response plans for a vessel carrying group II or III persistent oil as a primary cargo that operates in an area with year-round pre-approval for dispersant use may receive credit for up to 25 percent of their required on-water recovery capacity in that area for 1993 if the availability of these resources are ensured by contract or other approved means. For response plan credit, these resources must be capable of being on scene within 12 hours of the discovery of a discharge.

8.2 To receive credit against any required on-water recovery capacity, a response plan must identify the locations of dispersant stockpiles, methods of transporting to a shoreside staging area, and appropriate aircraft or vessels to apply the dispersant and monitor its effectiveness at the scene of an oil discharge.

8.2.1 Sufficient volumes of dispersants must be available to treat the oil at the dosage rate recommended by the dispersant manufacturer. Dispersants identified in a response plan must be on the National Contingency Plan Product Schedule maintained by the U.S. Environmental Protection Agency. (Some States have a list of approved dispersants and within State waters only they can be used.)

8.2.2 Dispersant application equipment identified in a response plan for credit must be located such that it can be mobilized to shoreside staging areas to meet the time requirements in section 8.1 of this appendix. Sufficient equipment capacity and sources of appropriate dispersants must be identified to sustain dispersant operations for at least 3 days.

8.2.3 Credit against on-water recovery capacity in pre-approved areas will be based on the ability to treat oil at a rate equivalent to this credit. For example, a 2,500 barrels per day credit against the 10,000 barrels per day on-water Tier 1 cap would require the vessel owner or operator to demonstrate the ability to treat 2,500 barrels per day of oil at the manufacturer's recommended dosage rate. Assuming a dosage rate of 10:1, the plan would need to show stockpiles and sources of 750 barrels of dispersants that would be available on scene at a rate of 250 barrels per day and the ability to apply the dispersant at the daily rate for 3 days in the area in which the vessel operates. Similar data would need to be provided for any additional credit against Tier 2 and 3 resources.

8.3 In addition to the equipment and supplies required, a vessel owner or operator shall identify a source of support to conduct the monitoring and post-use effectiveness evaluation required by applicable Local and Area Contingency Plans.

8.4 Identification of the resources for dispersant application does not imply that the use of this technique will be authorized. Actual authorization for use during a spill response will be governed by the provisions of the National Oil and Hazardous Substances Contingency Plan (40 CFR part 300) and the applicable Local or Area Contingency Plan.

8.5 In addition to the credit identified above, a vessel owners or operators that operates in areas pre-approved for dispersant use may reduce their required on-water recovery cap increases for 1998 and 2003 by up to 50% by identifying non-mechanical methods.

8.6 The use of in-situ burning as a non-mechanical response method is still being studied. Because limitations and uncertainties remain for the use of this method, it may not be used to reduce required oil recovery capacity in 1993. Use of this or other alternative high-rate methods for a portion of the required cap increase in 1998 will be determined during the cap increase review in 1996.

9. Additional Equipment Necessary to Sustain Response Operations

9.1 A vessel owner or operator is responsible for ensuring that sufficient numbers of trained personnel, boats, aerial spotting aircraft, sorbent materials, boom anchoring materials, and other resources are a available to sustain response operations to completion. All such equipment must be suitable

for use with the primary equipment identified in the response plan. A vessel owner or operator is not required to list these resources in the response plan, but shall certify their availability.

9.2 A vessel owner or operator shall evaluate the availability of adequate temporary storage capacity to sustain the effective daily recovery capacities from equipment identified in the plan. Because of the inefficiencies of oil spill recovery devices, response plans must identify daily storage capacity equivalent to twice the effective daily recovery capacity required on scene. This temporary storage capacity may be reduced if a vessel owner or operator can demonstrate by waste stream analysis that the efficiencies of the oil recovery devices, ability to decant water, or the availability of alternative temporary storage or disposal locations in the area(s) the vessel will operate will reduce the overall volume of oily material storage requirements.

9.3 A vessel owner or operator shall ensure that their planning includes the capability to arrange for disposal of recovered oil products. Specific disposal procedures will be addressed in the applicable Area Contingency Plan.

TABLE 1.—RESPONSE RESOURCE OPERATING CRITERIA

[Oil Recovery Devices]

Operating Environment	Significant Wave Height [1] (feet)	Sea State
Rivers & Canals	≤1	1
Inland	≤3	2
Great Lakes	≤4	2–3
Ocean	≤6	3–4

[Boom]

Boom Property	Use			
	Rivers & Canals	Inland	Great Lakes	Ocean
Significant Wave [1, 2] Height (feet)	≤1	≤3	≤4	≤6
Sea State	1	2	2–3	3–4
Boom height—in. (draft plus freeboard)	6–18	18–42	18–42	≥42
Reserve Buoyancy to Weight Ratio	2:1	2:1	2:1	3:1 to 4:1
Total Tensile Strength—lbs.	4,500	15–20,000	15–20,000	>20,000
Skirt Fabric Tensile Strength—lbs.	200	300	300	500
Skirt Fabric Tear Strength—lbs.	100	100	100	125

[1] Oil recovery devices and boom must be at least capable of operating in wave heights up to and including the values listed in Table 1 for each operating environment.

[2] Equipment identified as capable of operating in waters of 6 feet or less depth are exempt from the significant wave height planning requirement.

TABLE 2.—SHORELINE PROTECTION REQUIREMENTS

Location	Boom	Availability hours	
	Ensured by contract or other approved means (ft.)	Higher volume port area	Other areas
Persistent Oils			
Open Ocean	.....	.....	.....
Offshore	15,000	24	48
Nearshore/Inland/Great Lakes	30,000	12	24
Rivers & Canals	25,000	12	24
Non-Persistent Oils			
Open Ocean	.....	.....	.....
Offshore	.....	.....	.....
Nearshore/Inland/Great Lakes	10,000	12	24
Rivers & Canals	15,000	12	24

Spill Location	Nearshore/Inland/ Great Lakes			River		
Sustainability of on-water oil recovery	4 days			3 days		
Oil Group	% Natural Dissipation	% Recovered Floating oil	% Oil on shore	% Natural Dissipation	% Recovered Floating oil	% Oil on shore
I Non-persistent oils	80	20	10	80	10	10
II Light crudes and fuels	50	50	30	40	15	45
III Medium crudes and fuels	30	50	50	20	15	65
IV Heavy crudes /residual fuels	10	50	70	5	20	75

Note: Percentage may not sum to 100; reflects enhanced on-water recovery capacity

Table 3 Removal Capacity Planning Table

Spill Location	Open ocean			Offshore		
Sustainability of on–water oil recovery	10 days			6 days		
Oil Group	% Natural Dissipation	% Recovered Floating oil	% Oil on shore	% Natural Dissipation	% Recovered Floating oil	% Oil on shore
I Non–persistent oils	100	/	/	95	[5]*	/
II Light crudes	90	10	/	75	25	5
III Medium crudes and fuels	75	20	[5]*	60	40	20
IV Heavy crudes /residual fuels	50	20	[30]*	50	40	30

* Included in table for continuity; no planning required.

Table 3 Removal Capacity Planning Table

TABLE 4.—EMULSIFICATION FACTORS FOR PETROLEUM OIL CARGO GROUPS

Non-persistent oil 72 G:	
Group I	1.0
Persistent oil:	
Group II	1.8
Group III	2.0

TABLE 4.—EMULSIFICATION FACTORS FOR PETROLEUM OIL CARGO GROUPS—Continued

Group IV	1.4

TABLE 5.—ON-WATER OIL RECOVERY RESOURCE MOBILIZATION FACTORS

Area	Tier 1	Tier 2	Tier 3
Rivers and Canals	.30	.40	.60
Inland/Nearshore/Great Lakes	.15	.25	.40
Offshore	.10	.165	.21
Ocean	.06	.10	.12

Note: These mobilization factors are for total resources mobilized, not incremental resources.

TABLE 6.—RESPONSE CAPABILITY CAPS BY GEOGRAPHIC AREA

	Tier 1	Tier 2	Tier 3
As of February 18, 1993:			
All except rivers & canals & Great Lakes	10K bbls/day	20K bbls/day	40K bbls/day.
Great Lakes	5K bbls/day	10K bbls/day	20K bbls/day.
Rivers & canals	1,500 bbls/day	3,000 bbls/day	6,000 bbls/day.
February 18, 1998:			
All except rivers & canals & Great Lakes	12.5K bbls/day	25K bbls/day	50K bbls/day.
Great Lakes	6.35K bbls/day	12.3K bbls/day	25K bbls/day.
Rivers & canals	1,875 bbls/day	3,750 bbls/day	7,500 bbls/day.
February 18, 2003			
All except rivers & canals & Great Lakes	TBD	TBD	TBD
Great Lakes	TBD	TBD	TBD
Rivers & canals	TBD	TBD	TBD

Note: The caps show cumulative overall effective daily recovery capacity, not incremental increases.
K = Thousand
bbls = Barrels
TBD = To be determined

[CGD 91–034, 61 FR 1100, Jan. 12, 1996, as amended by CGD 96–026, 61 FR 33666, June 28, 1996]

APPENDIX C TO PART 155—TRAINING ELEMENTS FOR OIL SPILL RESPONSE PLANS

1. General

1.1 The portion of the plan dealing with training is one of the key elements of a response plan. This concept is clearly expressed by the fact that Congress, in writing the Oil Pollution Act of 1990, specifically included training as one of the sections required in a vessel or facility response plan. In reviewing submitted response plans, it has been noted that the plans often do not provide sufficient information in the training section of the plan for either the user or the reviewer of the plan. In some cases, plans simply state that the crew and others will be training in their duties and responsibilities, with no other information being provided. In other plans, information is simply given that required parties will receive the necessary worker safety training (HAZWOPER).

1.2 The training section of the plan need not be a detailed course syllabus, but it must contain sufficient information to allow the user and reviewer (or evaluator) to have an understanding of those areas that are believed to be critical. Plans should identify key skill areas and the training that is required to ensure that the individual identified will be capable of performing the duties prescribed to them. It should also describe how the training will be delivered to the various personnel. Further, this section of the plan must work in harmony with those sections of the plan dealing with exercises, the spill management team, and the qualified individual.

1.3 The material in this appendix C is not all-inclusive and is provided for guidance only.

2. Elements to be Addressed

2.1 To assist in the preparation of the training section of a vessel response plan, some of the key elements that should be addressed are indicated in the following sections. Again, while it is not necessary that the comprehensive training program for the company be included in the response plan, it is necessary for the plan to convey the elements that define the program as appropriate.

2.2 An effective spill response training program should consider and address the following:

2.2.1 Notification requirements and procedures.

2.2.2 Communication system(s) used for the notifications.

2.2.3 Procedures to mitigate or prevent any discharge or a substantial threat of a discharge of oil resulting from—

2.2.3.1 Operational activities associated with internal or external cargo transfers;

2.2.3.2 Grounding or stranding;

2.2.3.3 Collision;

2.2.3.4 Explosion or fire;

2.2.3.5 Hull failure;

2.2.3.6 Excessive list; or

2.2.3.7 Equipment failure.

2.2.4 Procedures and arrangements for emergency towing.

2.2.5 When performing shipboard mitigation measures—

2.2.5.1 Ship salvage procedures;

2.2.5.2 Damage stability; and

2.2.5.3 Hull stress considerations.

2.2.6 Procedures for transferring responsibility for direction of response activities from vessel and facility personnel to the spill management team.

2.2.7 Familiarity with the operational capabilities of the contracted oil spill removal organizations and the procedures to notify and activate such organizations.

2.2.8 Familiarity with the contracting and ordering procedures to acquire oil spill removal organization resources.

2.2.9 Familiarity with the Area Contingency Plans.

2.2.10 Familiarity with the organizational structures that will be used to manage the response actions.

2.2.11 Responsibilities and duties of the spill management team members in accordance with designated job responsibilities.

2.2.12 Responsibilities and authority of the qualified individual as described in the vessel response plan and company response organization.

2.2.13 Responsibilities of designated individuals to initiate a response and supervise shore-based response resources.

2.2.14 Actions to take, in accordance with designated job responsibilities, in the event of a transfer system leak, tank overflow, or suspected cargo tank or hull leak.

2.2.15 Information on the cargoes handled by the vessel or facility, including familiarity with—

2.2.15.1 Cargo material safety data sheets;

2.2.15.2 Chemical characteristics of the cargo;

2.2.15.3 Special handling procedures for the cargo;

2.2.15.4 Health and safety hazards associated with the cargo; and

2.2.15.5 Spill and firefighting procedures for the cargo.

2.2.16 Occupational Safety and Health Administration requirements for worker health and safety (29 CFR 1910.120).

3. Further Considerations

In drafting the training section of the response plan, some further considerations are noted below (these points are raised simply as a reminder):

3.1 The training program should focus on training provided to vessel personnel.

3.2 An organization is comprised of individuals, and a training program should be structured to recognize this fact by ensuring that training is tailored to the needs of the individuals involved in the program.

3.3 An owner or operator may identify equivalent work experience which fulfills specific training requirements.

3.4 The training program should include participation in periodic announced and unannounced exercises. This participation should approximate the actual roles and responsibilities of individuals as specified in the response plan.

3.5 Training should be conducted periodically to reinforce the required knowledge and to ensure an adequate degree of preparedness by individuals with responsibilities under the vessel response plan.

3.6 Training may be delivered via a number of different means; including classroom sessions, group discussions, video tapes, self study workbooks, resident training courses, on-the-job training, or other means as deemed appropriate to ensure proper instruction.

3.7 New employees should complete the training program prior to being assigned job responsibilities which require participation in emergency response situations.

4. Conclusion

The information in this appendix is only intended to assist response plan preparers in reviewing the content of and in modifying the training section of their response plans. It may be more comprehensive than is needed for some vessels and not comprehensive enough for others. The Coast Guard expects that plan preparers have determined the training needs of their organizations created by the development of the response plans and the actions identified as necessary to increase the preparedness of the company and its personnel to respond to actual or threatened discharges of oil from their vessels.

[CGD 91–034, 61 FR 1107, Jan. 12, 1996]

PART 156—OIL AND HAZARDOUS MATERIAL TRANSFER OPERATIONS

Subpart A—Oil and Hazardous Material Transfer Operations

Sec.
156.100 Applicability.
156.105 Definitions.
156.107 Alternatives.
156.110 Exemptions.
156.111 Incorporation by reference.
156.112 Suspension order.
156.113 Compliance with suspension order.
156.115 Person in charge: Limitations.
156.118 Advance notice of transfer.
156.120 Requirements for transfer.
156.125 Discharge cleanup.
156.130 Connection.
156.150 Declaration of inspection.
156.160 Supervision by person in charge.
156.170 Equipment tests and inspections.

Subpart B—Special Requirements for Lightering of Oil and Hazardous Material Cargoes

156.200 Applicability.
156.205 Definitions.
156.210 General.
156.215 Pre-arrival notices.
156.220 Reporting of incidents.
156.225 Designation of lightering zones.
156.230 Factors considered in designating lightering zones.

Subpart C—Lightering Zones and Operational Requirements for the Gulf of Mexico

156.300 Designated lightering zones.
156.310 Prohibited areas.
156.320 Maximum operating conditions.
156.330 Operations.

AUTHORITY: 33 U.S.C. 1231, 1321(j)(1) (C) and (D); 46 U.S.C. 3703a. Subparts B and C are also issued under 46 U.S.C. 3715.

Subpart A—Oil and Hazardous Material Transfer Operations

§ 156.100 Applicability.

This subpart applies to the transfer of oil or hazardous material on the navigable waters or contiguous zone of the United States to, from, or within each vessel with a capacity of 250 barrels or more; except that, this subpart does not apply to transfer operations within a public vessel.

[CGD 86–034, 55 FR 36255, Sept. 4, 1990]

§ 156.105 Definitions.

Except as specifically stated in a section, the definitions in § 154.105 of this chapter apply to this subpart.

[CGD 90–071a, 59 FR 53291, Oct. 21, 1994]

§ 156.107 Alternatives.

(a) The COTP may consider and approve alternative procedures, methods, or equipment standards to be used by a vessel or facility operator in lieu of any requirements in this part if:

(1) Compliance with the requirement is economically or physically impractical;

(2) The vessel or facility operator submits a written request for the alternative at least 30 days before operations under the alternative are proposed, unless the COTP authorizes a shorter time; and

(3) The alternative provides an equivalent level of safety and protection from pollution by oil or hazardous material, which is documented in the request.

(b) The COTP takes final approval or disapproval action on any alternative requested, in writing, within 30 days of receipt of the request.

[CGD 75–124, 45 FR 7177, Jan. 31, 1980, as amended by CGD 86–034, 55 FR 36255, Sept. 4, 1990]

§ 156.110 Exemptions.

(a) The Assistant Commandant for Marine Safety and Environmental Protection, acting for the Commandant, may grant an exemption or partial exemption from compliance with any requirement in this part, and the District Commander may grant an exemption or partial exemption from compliance with any operating condition or requirement in subpart C of this part, if:

(1) The vessel or facility operator submits an application for exemption via the COTP at least 30 days before operations under the exemption are proposed, unless the COTP authorizes a shorter time; and

(2) It is determined, from the application, that:

(i) Compliance with a specific requirement is economically or physically impractical;

(ii) No alternative procedures, methods, or equipment standards exist that would provide an equivalent level of safety and protection from pollution by oil or hazardous material; and

(iii) The likelihood of oil or hazardous material being discharged as a result of the exemption is minimal.

(b) If requested, the applicant must submit any appropriate information, including an environmental and economic assessment of the effects of and reasons for the exemption and proposed procedures, methods or equipment standards.

(c) The exemption may specify the procedures, methods, or equipment standards that will apply.

(d) An exemption is granted or denied in writing. The decision of the Assistant Commandant for Marine Safety and Environmental Protection is a final agency action.

[CGD 75–124, 45 FR 7177, Jan. 31, 1980, as amended by CGD 88–052, 53 FR 25122, July 1, 1988; CGD 86–034, 55 FR 36255, Sept. 4, 1990; CGD 93–081, 60 FR 45017, Aug. 29, 1995; CGD 96–026, 61 FR 33666, June 28, 1996; CGD 93–056, 61 FR 41461, Aug. 8, 1996; CGD0 97–023, 62 FR 33364, June 19, 1997]

§ 156.111 Incorporation by reference.

(a) Certain material is incorporated by reference into this part with the approval of the Director of the Federal Register under 5 U.S.C. 552(a) and 1 CFR part 51. To enforce any edition other than that specified in paragraph (b) of this section, the Coast Guard must publish notice of the change in the FEDERAL REGISTER; and the material must be available to the public. All approved material is available for inspection at the Office of the Federal Register, 800 North Capitol Street, NW., suite 700, Washington, DC, and at the U.S. Coast Guard, Office of Compliance (G–MOC), 2100 Second Street, SW, Washington, DC 20593–0001 and is available from the sources indicated in paragraph (b) of this section.

(b) The material approved for incorporation by reference in this part and the sections affected are as follows:

Oil Companies International Marine Forum (OCIMF)

15th Floor, 96 Victoria Street, London SW1E 5JW, England.

Ship to Ship Transfer Guide (Petroleum), Second Edition, 1988—156.330.

International Chamber of Shipping

12 Carthusian Street, London EC1M 6EB, England.

Guide to Helicopter/Ship Operations, Third Edition, 1989—156.330.

[CGD 93–081, 60 FR 45017, Aug. 29, 1995, as amended by CGD 96–026, 61 FR 33666, June 28, 1996]

§ 156.112 Suspension order.

The COTP or OCMI may issue a suspension order to suspend transfer operations to the vessel or facility operator when the COTP or OCMI finds there is

a condition requiring action to prevent the discharge or threat of discharge of oil or hazardous material, or when the COTP or OCMI is unable to verify compliance with the regulations through an inspection. A suspension order:

(a) May be effective immediately;

(b) Is issued in writing unless it is effective immediately and then it may be issued orally and followed up in writing;

(c) Includes a statement of each condition requiring correction to—

(1) Prevent the discharge of oil or hazardous material; or

(2) Comply with § 154.735 of this chapter; and

(d) Is withdrawn when the COTP, OCMI, or District Commander, as applicable, determines that the condition requiring action to prevent the discharge or threat of discharge of oil or hazardous material has been corrected or no longer exists.

[CGD 75–124, 45 FR 7177, Jan. 31, 1980, as amended by CGD 86–034, 55 FR 36255, Sept. 4, 1990]

§ 156.113 Compliance with suspension order.

(a) No vessel or facility operator to whom a suspension order has been issued may conduct transfer operations from the time the order is effective until that order is withdrawn by the applicable COTP, OCMI, or by the District Commander.

(b) The vessel or facility operator may request reconsideration of the suspension order either orally or in writing to the COTP or OCMI who issued it. The request may contain supporting documentation and evidence that the vessel or facility operator wishes to have considered.

(c) Any person not satisfied with a ruling made under the procedure contained in paragraph (b) of this section may appeal that ruling in writing, except as allowed under paragraph (e) of this section, to the Coast Guard District Commander of the district in which the suspension order was issued. The appeal may contain supporting documentation and evidence that the appellant wishes to have considered. The appeal does not stay the effect of the suspension order while the COTP or OCMI ruling is being reviewed. The District Commander issues a ruling after reviewing the appeal.

(d) The ruling by the District Commander is final agency action.

(e) If the delay in presenting a written appeal under paragraph (c) of this section would have a significant adverse impact on the appellant, the appeal may initially be presented orally. If an initial presentation of the appeal is made orally, the appellant must submit the appeal in writing within five days of the oral presentation to the District Commander to whom the oral appeal was made, containing, at a minimum the basis for the appeal and a summary of the material presented orally.

[CGD 75–124, 45 FR 7177, Jan. 31, 1980, as amended by CGD 86–034, 55 FR 36255, Sept. 4, 1990]

§ 156.115 Person in charge: Limitations.

(a) No person may serve as the person in charge of transfer operations on more than one vessel at a time during transfers between vessels or between two or more vessels and a facility unless authorized by the COTP.

(b) No person may serve as the person in charge of both a vessel and a facility during transfer operations unless authorized by the COTP.

[CGD 75–124, 45 FR 7177, Jan. 31, 1980, as amended by CGD 86–034, 55 FR 36255, Sept. 4, 1990]

§ 156.118 Advance notice of transfer.

(a) The COTP may require a facility operator to notify the COTP of the time and place of each transfer operation at least 4 hours before it begins for facilities that:

(1) Are mobile;

(2) Are in a remote location;

(3) Have a prior history of oil or hazardous material spills; or

(4) Conduct infrequent transfer operations.

(b) In the case of a vessel to vessel transfer, the COTP may require a vessel operator of a lightering or fueling vessel to notify the COTP of the time and place of each transfer operation, as specified by the COTP, at least 4 hours before it begins.

(c) No person may conduct such transfer operations until advance notice has been given as specified by the COTP.

NOTE: The notification may be accomplished by submitting a written schedule, periodically updated to be current.

[CGD 75–124, 45 FR 7177, Jan. 31, 1980, as amended by CGD 86–034, 55 FR 36255, Sept. 4, 1990]

§ 156.120 Requirements for transfer.

A transfer is considered to begin when the person in charge on the transferring vessel or facility and the person in charge on the receiving facility or vessel first meet to begin completing the declaration of inspection, as required by § 156.150 of this part. No person shall conduct an oil or hazardous material transfer operation unless:

(a) The vessel's moorings are strong enough to hold during all expected conditions of surge, current, and weather and are long enough to allow adjustment for changes in draft, drift, and tide during the transfer operation;

(b) Transfer hoses and loading arms are long enough to allow the vessel to move to the limits of its moorings without placing strain on the hose, loading arm, or transfer piping system;

(c) Each hose is supported to prevent kinking or other damage to the hose and strain on its coupling.

(d) Each part of the transfer system is aligned to allow the flow of oil or hazardous material;

(e) Each part of the transfer system not necessary for the transfer operation is securely blanked or shut off;

(f) The end of each hose and loading arm that is not connected for the transfer of oil or hazardous material is blanked off using the closure devices required by §§ 154.520 and 155.805 of this chapter;

(g) The transfer system is attached to a fixed connection on the vessel and the facility except that when a vessel is receiving fuel, an automatic back pressure shutoff nozzle may be used;

(h) Each overboard discharge or sea suction valve that is connected to the vessel's transfer or cargo tank system is sealed or lashed in the closed position; except when used to receive or discharge ballast in compliance with 33 CFR Part 157;

(i) Each transfer hose has no unrepaired loose covers, kinks, bulges, soft spots, or any other defect which would permit the discharge of oil or hazardous material through the hose material and no gouges, cuts, or slashes that penetrate the first layer of hose reinforcement (''reinforcement'' means the strength members of the hose, consisting of fabric, cord and/or metal);

(j) Each hose or loading arm in use meets §§ 154.500 and 154.510 of this chapter, respectively;

(k) Each connection meets § 156.130;

(l) Any monitoring devices required by § 154.525 of this chapter are installed and operating properly;

(m) The discharge containment equipment required by § 154.545 of this chapter is readily accessible or deployed as applicable;

(n) The discharge containment required by §§ 154.530, 155.310, and 155.320 of this chapter, as applicable, is in place and periodically drained to provide the required capacity;

(o) Each drain and scupper is closed by the mechanical means required by § 155.310;

(p) All connections in the transfer system are leak free except that a component in the transfer system, such as the packing glands of a pump, may leak at a rate that does not exceed the capacity of the discharge containment provided during the transfer operation;

(q) The communications required by §§ 154.560 and 155.785 of this chapter are operable for the transfer operation;

(r) The emergency means of shutdown required by §§ 154.550 and 155.780 of this chapter, as applicable, is in position and operable;

(s) There is a person in charge on the transferring vessel or facility and the receiving vessel or facility except as otherwise authorized under § 156.115;

(t) Each person in charge required by paragraph (s) of this section:

(1) Is at the site of the transfer operation and immediately available to the transfer personnel;

(2) Has in his or her possession a copy of the facility operations manual or vessel transfer procedures, as appropriate; and

(3) Conducts the transfer operation in accordance with the facility operations manual or vessel transfer procedures, as appropriate;

(u) The personnel required, under the facility operations manual and the vessel transfer procedures, to conduct the transfer operation:

(1) Are on duty; and

(2) Conduct the transfer operation in accordance with the facility operations manual or vessel transfer procedures, as appropriate;

(v) At least one person is at the site of the transfer operation who fluently speaks the language or languages spoken by both persons in charge;

(w) The person in charge of the transfer on the transferring vessel or facility and the person in charge of it on the receiving vessel or facility have held a conference, to ensure that each person in charge understands—

(1) The identity of the product to be transferred;

(2) The sequence of transfer operations;

(3) The transfer rate;

(4) The name or title and location of each person participating in the transfer operation;

(5) Details of the transferring and receiving systems including procedures to ensure that the transfer pressure does not exceed the maximum allowable working pressure (MAWP) for each hose assembly, loading arm and/or transfer pipe system;

(6) Critical stages of the transfer operation;

(7) Federal, state, and local rules that apply to the transfer of oil or hazardous material;

(8) Emergency procedures;

(9) Discharge containment procedures;

(10) Discharge reporting procedures;

(11) Watch or shift arrangement;

(12) Transfer shutdown procedures; and,

(13) If the persons use radios, a predetermined frequency for communications during the transfer, agreed upon by both.

(x) The person in charge of transfer operations on the transferring vessel or facility and the person in charge of transfer operations on the receiving vessel or facility agree to begin the transfer operation;

(y) Between sunset and sunrise the lighting required by §§ 154.570 and 155.790 of this chapter is provided; and

(z) For transfer operations between tank barges from sunset to sunrise, lighting is provided as described in § 155.790 of this chapter.

(aa) A transfer operation which includes collection of vapor emitted from a vessel's cargo tanks through a venting system not located on the vessel must have the following verified by the person in charge:

(1) Each manual valve in the vapor collection system is correctly positioned to allow the collection of cargo vapor;

(2) A vapor collection hose or arm is connected to the vessel's vapor connection;

(3) The electrical insulating device required by § 154.810(g) of this chapter or 46 CFR 39.40–3(c) is fitted between the facility vapor connection and the vessel vapor connection;

(4) The initial loading rate and the maximum transfer rate are determined;

(5) The maximum and minimum operating pressures at the facility vapor connection are determined;

(6) The tank barge overfill control system, if installed, is connected to the facility, tested, and operating properly;

(7) The following have been performed not more than 24 hours prior to the start of the transfer operation:

(i) Each alarm and automatic shutdown system required by subpart E of part 154 of this chapter and 46 CFR part 39 has been tested and found to be operating properly, and

(ii) Analyzers required by § 154.820(a), § 154.824 (d) and (e) of this chapter or 46 CFR 39.40–3(a) have been checked for calibration by use of a span gas;

(8) Each vapor recovery hose has no unrepaired loose covers, kinks, bulges, soft spots, or any other defect which would permit the discharge of vapor through the hose material, and no external gouges, cuts, or slashes that penetrate the first layer of hose reinforcement; and

(9) The oxygen content of the vessel's cargo tanks, if inerted, is at or below 8 percent by volume.

(bb) If the transfer operation involves loading oil, as defined in § 151.05 of this chapter, into a cargo tank, the overfill device required by § 155.480 of this chapter is installed and operating properly.

(cc) Smoking is not permitted in the facilities marine transfer area except in designated smoking areas.

(dd) Welding, hot work operations and smoking are prohibited on vessels during the transfer of flammable or combustible materials, except that smoking may be permitted in accommodation areas designated by the master.

(Approved by the Office of Management and Budget under control number 2115–0506)

[CGD 75–124, 45 FR 7177, Jan. 31, 1980, as amended by CGD 88–102, 55 FR 25445, June 21, 1990; CGD 86–034, 55 FR 36255, Sept. 4, 1990; CGD 90–071a, 59 FR 53291, Oct. 21, 1994; CGD 93–056, 61 FR 41461, Aug. 8, 1996; CGD 79–116, 62 FR 25127, May 8, 1997]

§ 156.125 Discharge cleanup.

(a) Each person conducting the transfer operation shall stop the transfer operation whenever oil or hazardous material from any source is discharged:

(1) In the transfer operation work area; or

(2) Into the water or upon the adjoining shoreline in the transfer area.

(b) Except as permitted under paragraph (c) of this section, no person may resume the transfer operation after it has been stopped under paragraph (a) of this section, unless:

(1) Oil or hazardous material discharged in the transfer operation work area is cleaned up; and

(2) Oil or hazardous material discharged into the water or upon the adjoining shoreline is cleaned up, or is contained and being cleaned up.

(c) The COTP may authorize resuming the transfer operation if it is deemed appropriate.

[CGD 75–124, 45 FR 7177, Jan. 31, 1980, as amended by CGD 86–034, 55 FR 36255, Sept. 4, 1990]

§ 156.130 Connection.

(a) Each person who makes a connection for transfer operations shall:

(1) Use suitable material in joints and couplings to ensure a leak-free seal;

(2) Use a bolt in at least every other hole, and in no case less than four bolts, in each temporary bolted connection that uses a flange that meets American National Standards Institute (ANSI) standard flange requirements under § 154.500(d)(2) of this chapter;

(3) Use a bolt in each hole in each temporary bolted connection that uses a flange other than one that meets ANSI standards;

(4) Use a bolt in each hole of each permanently connected flange;

(5) Use bolts of the correct size in each bolted connection; and

(6) Tighten each bolt and nut uniformly to distribute the load and sufficiently to ensure a leak free seal.

(b) A person who makes a connection for transfer operations must not use any bolt that shows signs of strain or is elongated or deteriorated.

(c) Except as provided in paragraph (d) of this section, no person may use a connection for transfer operations unless it is:

(1) A bolted or full threaded connection; or

(2) A quick-connect coupling acceptable to the Commandant.

(d) No person may transfer oil or hazardous material to a vessel that has a fill pipe for which containment cannot practically be provided unless an automatic back pressure shutoff nozzle is used.

[CGD 75–124, 45 FR 7177, Jan. 31, 1980, as amended by CGD 86–034, 55 FR 36256, Sept. 4, 1990]

§ 156.150 Declaration of inspection.

(a) No person may transfer oil or hazardous material to or from a vessel unless each person in charge, designated under §§ 154.710 and 155.700 of this chapter, has filled out and signed the declaration of inspection form described in paragraph (c) of this section.

(b) No person in charge may sign the declaration of inspection unless he or she has determined by inspection, and indicated by initialling in the appropriate space on the declaration of inspection form, that the facility or vessel, as appropriate, meets § 156.120.

(c) The declaration of inspection may be in any form but must contain at least:

(1) The name or other identification of the transferring vessel or facility and the receiving vessel or facility;

(2) The address of the facility or location of the transfer operation if not at a facility;

(3) The date and time the transfer operation is started;

(4) A list of the requirements in § 156.120 with spaces on the form following each requirement for the person in charge of the vessel or facility to indicate by initialling that the requirement is met for the transfer operation; and

(5) A space for the date, time of signing, signature, and title of each person in charge during transfer operations on the transferring vessel or facility and a space for the date, time of signing, signature, and title of each person in charge during transfer operations on the receiving facility or vessel certifying that all tests and inspections have been completed and that they are both ready to begin transferring product; and

(6) The date and time the transfer operation is completed.

(d) The form for the declaration of inspection may incorporate the declaration-of-inspection requirements under 46 CFR 35.35–30.

(e) The vessel and facility persons in charge shall each have a signed copy of the declaration of inspection available for inspection by the COTP during the transfer operation.

(f) The operators of each vessel and facility engaged in the transfer operation shall retain a signed copy of the declaration of inspection on board the vessel or at the facility for at least 1 month from the date of signature.

[CGD 75–124, 45 FR 7177, Jan. 31, 1980, as amended by CGD 86–034, 55 FR 36256, Sept. 4, 1990; CGD 93–056, 61 FR 41461, Aug. 8, 1996]

§ 156.160 Supervision by person in charge.

(a) No person may connect or disconnect a hose, top off a tank, or engage in any other critical procedures during the transfer operation unless the person in charge, required by § 156.120(s), supervises that procedure.

(b) No person may start the flow of oil or hazardous material to or from a vessel unless instructed to do so by either person in charge.

(c) No person may transfer oil or hazardous material to or from a vessel unless each person in charge is in the immediate vicinity and immediately available to the transfer personnel.

[CGD 75–124, 45 FR 7177, Jan. 31, 1980, as amended by CGD 86–034, 55 FR 36256, Sept. 4, 1990]

§ 156.170 Equipment tests and inspections.

(a) Except as provided in paragraph (d) of this section, no person may use any equipment listed in paragraph (c) of this section for transfer operations unless the vessel or facility operator, as appropriate, tests and inspects the equipment in accordance with paragraphs (b), (c) and (f) of this section and the equipment is in the condition specified in paragraph (c) of this section.

(b) During any test or inspection required by this section, the entire external surface of the hose must be accessible.

(c) For the purpose of paragraph (a) of this section:

(1) Each nonmetallic transfer hose must:

(i) Have no unrepaired loose covers, kinks, bulges, soft spots or any other defect which would permit the discharge of oil or hazardous material through the hose material, and no gouges, cuts or slashes that penetrate the first layer of hose reinforcement as defined in § 156.120(i).

(ii) Have no external deterioration and, to the extent internal inspection is possible with both ends of the hose open, no internal deterioration;

(iii) Not burst, bulge, leak, or abnormally distort under static liquid pressure at least 1½ times the maximum allowable working pressure; and

(iv) Hoses not meeting the requirements of paragraph (c)(1)(i) of this section may be acceptable after a static liquid pressure test is successfully completed in the presence of the COTP. The test medium is not required to be water.

(2) Each transfer system relief valve must open at or below the pressure at which it is set to open;

(3) Each pressure gauge must show pressure within 10 percent of the actual pressure;

(4) Each loading arm and each transfer pipe system, including each metallic hose, must not leak under static liquid pressure at least 1½ times the maximum allowable working pressure; and

(5) Each item of remote operating or indicating equipment, such as a remotely operated valve, tank level alarm, or emergency shutdown device, must perform its intended function.

(d) No person may use any hose in underwater service for transfer operations unless the operator of the vessel or facility has tested and inspected it in accordance with paragraph (c)(1) or (c)(4) of this section, as applicable.

(e) The test fluid used for the testing required by this section is limited to liquids that are compatible with the hose tube as recommended by the hose manufacturer.

(f) The frequency of the tests and inspections required by this section must be:

(1) For facilities, annually or not less than 30 days prior to the first transfer conducted past one year from the date of the last tests and inspections;

(2) For a facility in caretaker status, not less than 30 days prior to the first transfer after the facility is removed from caretaker status; and

(3) For vessels, annually or as part of the biennial and mid-period inspections.

(g) If a facility or vessel collects vapor emitted from a vessel cargo tank with a vapor control system, the system must not be used unless the following tests and inspections are satisfactorily completed:

(1) Each vapor hose, vapor collection arm, pressure or vacuum relief valve, and pressure sensor is tested and inspected in accordance with paragraphs (b), (c), and (f) of this section;

(2) Each remote operating or indicating device is tested for proper operation in accordance with paragraph (f) of this section;

(3) Each detonation arrester required by § 154.820, § 154.826(a), and § 154.828(a) of this chapter or 46 CFR 39.40–3(d), and each flame arrester required by § 154.826(a), § 154.828 (a) and (c) of this chapter has been inspected internally within the last year, or sooner if operational experience has shown that frequent clogging or rapid deterioration is likely; and

(4) Each hydrocarbon and oxygen analyzer required by § 154.820(a) and § 154.824 (d) and (e) of this chapter or 46 CFR 39.40–3(a) is calibrated:

(i) Within the previous two weeks, or

(ii) Within 24 hours prior to operation when the vapor control system is operated less frequently than once a week.

(h) Upon the request of the owner or operator, the COTP may approve alternative methods of compliance to the testing requirements of paragraph (c) of this section if the COTP determines that the alternative methods provide an equal level of protection.

(Approved by the Office of Management and Budget under control number 2115–0096)

[CGD 75–124, 45 FR 7177, Jan. 31, 1980, as amended by CGD 88–102, 55 FR 25445, June 21, 1990; CGD 86–034, 55 FR 36256, Sept. 4, 1990; CGD 93–056, 61 FR 41461, Aug. 8, 1996]

Subpart B—Special Requirements for Lightering of Oil and Hazardous Material Cargoes

SOURCE: CGD 78–180, 49 FR 11172, Mar. 26, 1984, unless otherwise noted.

§ 156.200 Applicability.

This subpart applies to each vessel to be lightered and each service vessel engaged in a lightering operation in the marine environment beyond the baseline from which the territorial sea is measured when the oil or hazardous material lightered is destined for a port or place subject to the jurisdiction of the U.S. This subpart does not apply to lightering operations involving public vessels, or to the dedicated response vessels and vessels of opportunity in accordance with the National Contingency Plan (40 CFR parts 9 and 300) when conducting response activities. These rules are in addition to the rules of subpart A of this part, as well as the rules in the applicable sections of parts 151, 153, 155, 156, and 157 of this chapter.

[CGD 93–081, 60 FR 45017, Aug. 29, 1995]

§ 156.205 Definitions.

(a) In addition to the terms defined in this section, the definitions in

§ 154.105 of this chapter apply to this subpart and to subpart C.

(b) As used in this subpart and subpart C:

Lightering or *Lightering operation* means the transfer of a cargo of oil or a hazardous material in bulk from one vessel to another, including all phases of the operation from the beginning of the mooring operation to the departure of the service vessel from the vessel to be lightered, except when that cargo is intended only for use as fuel or lubricant aboard the receiving vessel.

Marine environment means—

(1) The navigable waters of the United States;

(2) The waters of an area over which the United States asserts exclusive fishery management authority; and

(3) The waters superadjacent to the Outer Continental Shelf of the United States.

Service vessel means the vessel which receives a cargo of oil or a hazardous material from another vessel in a lightering operation.

Vessel to be lightered means the vessel which transports a cargo of oil or a hazardous material to a place within the marine environment for transfer of that cargo to another vessel for further transport to a port or place subject to the jurisdiction of the United States. The term ''vessel to be lightered'' does not include drilling rigs, or offshore supply vessels transferring cargo intended for use as fuel or lubricant aboard the receiving vessel.

Work includes any administrative duties associated with the vessel whether performed on board the vessel or onshore.

[CGD 78–180, 49 FR 11172, Mar. 26, 1984, as amended by CGD 86–034, 55 FR 36256, Sept. 4, 1990; CGD 90–052, 58 FR 48436, Sept. 15, 1993; CGD 93–081, 60 FR 45017, Aug. 29, 1995]

§ 156.210 General.

(a) No vessel may transfer oil or hazardous materials in a port or place subject to the jurisdiction of the United States, if the cargo has been lightered from another vessel, unless:

(1) The regulations in this subpart have been complied with;

(2) Both the vessel to be lightered and service vessel have, on board, at the time of transfer, a valid Certificate of Inspection, Certificate of Compliance, or a Tank Vessel Examination Letter, as would have been required under 46 U.S.C. 3710 or 3711, had the transfer taken place in a port or place subject to the jurisdiction of the United States; and

(3) The delivering and receiving vessels have on board at the time of transfer, evidence that each vessel is operating in compliance with section 311(j) of the Federal Water Pollution Control Act (33 U.S.C. 1321(j)) and applicable regulations issued under the authority of section 311(j) in the form of a Declaration of Inspection as required by § 156.150 and a vessel response plan if required under part 155 of this chapter.

NOTE: Under 46 U.S.C. 3715, the delivering and receiving vessels must have on board at the time of transfer, a Certificate of Financial Responsibility that would be required if the transfer had taken place in a location subject to the jurisdiction of the U.S. Regulations concerning Certificates of Financial Responsibility for vessels using the navigable waters of the U.S. are in part 130 of this chapter.

(4) The vessel to be lightered has on board, at the time of transfer, an International Oil Pollution Prevention (IOPP) Certificate or equivalent documentation of compliance with Annex I of the International Convention for the Prevention of Pollution from Ships, 1973, as modified by the Protocol of 1978 relating thereto (MARPOL 73/78), as would be required by Part 151 of this chapter for vessels in navigable waters of the United States. The IOPP Certificate or documentation of compliance shall be that prescribed by §§ 151.19 and 151.21 of this chapter, and shall be effective under the same timetable as specified in § 151.19.

(b) Lightering operations involving hazardous materials, other than oil, may be conducted only with the specific approval of the Commandant. A request to lighter hazardous materials, other than oil, must be submitted to Commandant (G–M) prior to the planned beginning of lightering operations. The request must include the information described in § 156.215(a) to the extent known, for the initial transfer, and the estimated frequency of subsequent lightering operations. After the entry into force of Annex II to

MARPOL 73/78, vessels lightering hazardous materials shall carry an International Pollution Prevention Certificate for the Carriage of Noxious Liquid Substances in Bulk (1973), if required by Annex II to MARPOL 73/78, or equivalent documentation of compliance with the annex.

(c) In an emergency, the COTP, upon request, may authorize a deviation from any rule in this part if the COTP determines that its application will endanger persons, property, or the environment.

(d) On vessels conducting lightering operations in a designated lightering zone, a licensed individual or seaman may not work, except in an emergency or a drill, more than 15 hours in any 24-hour period, or more than 36 hours in any 72-hour period, including the 24-hour and 72-hour periods prior to commencing lightering operations.

[CGD 78–180, 49 FR 11172, Mar. 29, 1984, as amended by CGD 88–052, 53 FR 25122, July 1, 1988; CGD 90–052, 58 FR 48436, Sept. 15, 1993; CGD 93–081, 60 FR 45017, Aug. 29, 1995]

§ 156.215 Pre-arrival notices.

(a) The master, owner or agent of each vessel to be lightered must give at least 24 hours advance notice to the Captain of the Port nearest the lightering location or zone, prior to arrival in the lightering location or zone. This advance notice must include:

(1) The vessel's name, call sign or official number, and registry:

(2) The cargo type (if oil) or shipping name (if hazardous material) and approximate amount on board;

(3) The number of transfers expected and the amount of cargo expected to be transferred during each transfer;

(4) The lightering location or zone to be used;

(5) The estimated time of arrival in the lightering location or zone;

(6) The estimated duration of transfer operations; and

(7) The name and destination of service vessel(s).

(b) In the event the estimated time of arrival in the lightering location or zone changes by more than six hours, the Master, owner or agent of each vessel to be lightered must advise the Captain of the Port of this change as soon as possible.

(c) Where lightering is conducted as a result of collision, grounding, tank rupture or any similar emergency, immediate notice must be given to the Captain of the Port.

(d) In addition to the other requirements in this section, the master, owner, or agent of a vessel that requires a Tank Vessel Examination (TVE) or other special Coast Guard inspection in order to lighter in a designated lightering zone must request the TVE or other inspection from the cognizant Captain of the Port at least 72 hours prior to commencement of lightering operations.

[CGD 78–180, 49 FR 11172, Mar. 26, 1984, as amended by CGD 90–052, 58 FR 48437, Sept. 15, 1993; CGD 93–081, 60 FR 45017, Aug. 29, 1995]

§ 156.220 Reporting of incidents.

(a) An immediate report must be made to the nearest Captain of the Port, by the service vessel, if fire, explosion, collision, grounding or any similar emergency, which poses a threat to the vessels involved, occurs during lightering.

(b) Any discharge of oil or hazardous material into the water shall be reported, by the service vessel, in accordance with the procedures specified in § 151.15 of this chapter.

§ 156.225 Designation of lightering zones.

The District Commander is delegated the authority to designate lightering zones and their operating requirements, where they are necessary for safety or environmental protection. When a lightering zone has been designated, lightering operations in a given geographic area may only be conducted within the designated lightering zone.

§ 156.230 Factors considered in designating lightering zones.

The following factors are considered in designating a lightering zone:

(a) The findings of the environmental analysis or, if prepared, the Environmental Impact Statement;

(b) The proximity of the zone to:

(1) Shipping lanes;

(2) Vessel traffic schemes or vessel separation systems;

(3) Anchorages;

(4) Fixed structures;

(5) Designated marine sanctuaries;

(6) Commercial and recreational fishing areas;

(7) Environmentally sensitive areas; and

(8) Designated units of the National Park System, National Wild and Scenic Rivers System, National Wilderness Preservation System, properties included on the National Register of Historic Places and National Registry of Natural Landmarks, and National Wildlife Refuge System.

(c) The traditional use of areas for lightering operations;

(d) The normal weather and sea conditions in the areas, and their effect on lightering operations, and the fate of possible cargo discharges;

(e) The depth of water and underwater obstructions that may adversely impact anchorages and clearance of vessels;

(f) Other relevant safety, environmental, or economic data.

Subpart C—Lightering Zones and Operational Requirements for the Gulf of Mexico

SOURCE: CGD 93–081, 60 FR 45017, Aug. 29, 1995, unless otherwise noted.

§ 156.300 Designated lightering zones.

The following lightering zones are designated in the Gulf of Mexico and are more than 60 miles from the baseline from which the territorial sea is measured:

(a) *Southtex—lightering zone.* This lightering zone and the geographic area for this zone are coterminous and consist of the waters bounded by a line connecting the following points beginning at:

Latitude N.	*Longitude W.*
27°40′00″,	93°00′00″, thence to
27°40′00″,	94°35′00″, thence to
28°06′30″,	94°35′00″, thence to
27°21′00″,	96°00′00″, thence to
26°30′00″,	96°00′00″, thence to
26°30′00″,	93°00′00″, and thence to the point of beginning.

(NAD 83)

(b) *Gulfmex No. 2—lightering zone.* This lightering zone and the geographic area for this zone are coterminous and consist of the waters bounded by a line connecting the following points beginning at:

Latitude N.	*Longitude W.*
27°53′00″,	89°00′00″, thence to
27°53′00″,	91°30′00″, thence to
26°30′00″,	91°30′00″, thence to
26°30′00″,	89°00′00″, and thence to the point of beginning.

(NAD 83)

(c) *Offshore Pascagoula No. 2—lightering zone.* This lightering zone and the geographic area for this zone are coterminous and consist of the waters bounded by a line connecting the following points beginning at:

Latitude N.	*Longitude W.*
29°20′00″,	87°00′00″, thence to
29°12′00″,	87°45′00″, thence to
28°39′00″,	88°00′00″, thence to
28°00′00″,	88°00′00″, thence to
28°00′00″,	87°00′00″, and thence to the point of beginning.

(NAD 83)

(d) *South Sabine Point—lightering zone.* This lightering zone and the geographic area for this zone are coterminous and consist of the waters bounded by a line connecting the following points beginning at:

Latitude N.	*Longitude W.*
28°30′00″,	92°38′00″, thence to
28°44′00″,	93°24′00″, thence to
28°33′00″,	94°00′00″, thence to
28°18′00″,	94°00′00″, thence to
28°18′00″,	92°38′00″, and thence to the point of beginning.

(NAD 83)

§ 156.310 Prohibited areas.

Lightering operations are prohibited within the following areas in the Gulf of Mexico:

(a) *Claypile—prohibited area.* This prohibited area consists of the waters bounded by a line connecting the following points beginning at:

Latitude N.	*Longitude W.*
28°15′00″,	94°35′00″, thence to
27°40′00″,	94°35′00″, thence to
27°40′00″,	94°00′00″, thence to
28°33′00″,	94°00′00″, and thence to the point of beginning.

(NAD 83)

(b) *Flower Garden—prohibited area.* This prohibited area consists of the waters bounded by a line connecting the following points beginning at:

Latitude N.	*Longitude W.*
27°40′00″,	94°00′00″, thence to
28°18′00″,	94°00′00″, thence to
28°18′00″,	92°38′00″, thence to
28°30′00″,	92°38′00″, thence to
28°15′00″,	91°30′00″, thence to
27°40′00″,	91°30′00″, and thence to the point of beginning.

(NAD 83)

(c) *Ewing—prohibited area.* This prohibited area consists of the waters bounded by a line connecting the following points beginning at:

Latitude N.	*Longitude W.*
27°53′00″,	91°30′00″, thence to
28°15′00″,	91°30′00″, thence to
28°15′00″,	90°10′00″, thence to
27°53′00″,	90°10′00″, and thence to the point of beginning.

(NAD 83)

§ 156.320 Maximum operating conditions.

Unless otherwise specified, the maximum operating conditions in this section apply to tank vessels operating within the lightering zones designated in this subpart.

(a) A tank vessel shall not attempt to moor alongside another vessel when either of the following conditions exist:

(1) The wind velocity is 56 km/hr (30 knots) or more; or

(2) The wave height is 3 meters (10 feet) or more.

(b) Cargo transfer operations shall cease and transfer hoses shall be drained when—

(1) The wind velocity exceeds 82 km/hr (44 knots); or

(2) Wave heights exceed 5 meters (16 feet).

§ 156.330 Operations.

(a) Unless otherwise specified in this subpart, or when otherwise authorized by the cognizant Captain of the Port (COTP) or District Commander, the master of a vessel lightering in a zone designated in this subpart shall ensure that all officers and appropriate members of the crew are familiar with the guidelines in paragraphs (b) and (c) of this section and that the requirements of paragraphs (d) through (l) of this section are complied with.

(b) Lightering operations should be conducted in accordance with the Oil Companies International Marine Forum Ship to Ship Transfer Guide (Petroleum), Second Edition, 1988, to the maximum extent practicable.

(c) Helicopter operations should be conducted in accordance with the International Chamber of Shipping Guide to Helicopter/Ship Operations, Third Edition, 1989, to the maximum extent practicable.

(d) The vessel to be lightered shall make a voice warning prior to the commencement of lightering activities via channel 13 VHF and 2182 Khz. The voice warning shall include:

(1) The names of the vessels involved;

(2) The vessels' geographical positions and general headings;

(3) A description of the operations;

(4) The expected time of commencement and duration of the operation; and

(5) Request for wide berth.

(e) In the event of a communications failure between the lightering vessels or the respective persons-in-charge of the transfer, or an equipment failure affecting the vessel's cargo handling capability or ship's maneuverability, the affected vessel shall suspend lightering activities and shall sound at least five short, rapid blasts on the vessel's whistle. Lightering activities shall remain suspended until corrective action has been completed.

(f) No vessel involved in a lightering operation may open its cargo system until the servicing vessel is securely moored alongside the vessel to be lightered.

(g) If any vessel not involved in the lightering operation or support activities approaches within 100 meters of vessels engaged in lightering, the vessel engaged in lightering shall warn the approaching vessel by sounding a loud hailer, ship's whistle, or any other appropriate means.

(h) Only a lightering tender, a supply boat, or a crew boat, equipped with a spark arrestor on its exhaust, or a tank vessel providing bunkers, may moor alongside a vessel engaged in lightering operations.

(i) Lightering operations shall not be conducted within 1 nautical mile of offshore structures or mobile offshore drilling units.

(j) No vessel engaged in lightering activities may anchor over charted pipelines, artificial reefs, or historical resources.

(k) All vessels engaged in lightering activities shall be able to immediately maneuver at all times while inside a designated lightering zone. The main propulsion system must not be disabled at any time.

(l) In preparing to moor alongside the vessel to be lightered, a service vessel shall not approach the vessel to be lightered closer than 1000 meters unless the service vessel is positioned broad on the quarter of the vessel to be lightered. The service vessel must transition to a nearly parallel heading prior to closing to within 50 meters of the vessel to be lightered.

PART 157—RULES FOR THE PROTECTION OF THE MARINE ENVIRONMENT RELATING TO TANK VESSELS CARRYING OIL IN BULK

Subpart A—General

Sec.
157.01 Applicability.
157.02 Incorportion by reference.
157.03 Definitions.
157.04 Authorization of classification societies.
157.05 Performing calculations for this part.
157.06 Appeals.
157.07 Equivalents.

Subpart B—Design, Equipment, and Installation

157.08 Applicability of Subpart B.
157.09 Segregated ballast.
157.10 Segregated ballast tanks and crude oil washing systems for certain new vessels.
157.10a Segregated ballast tanks, crude oil washing systems, and dedicated clean ballast tanks for certain new and existing vessels of 40,000 DWT or more.
157.10b Segregated ballast tanks, dedicated clean ballast tanks, and special ballast arrangements for tank vessels transporting Outer Continental Shelf oil.
157.10c Segregated ballast tanks, crude oil washing systems, and dedicated clean ballast tanks for certain new and existing tankships of 20,000 to 40,000 DWT.
157.10d Double hulls on tank vessels.
157.11 Pumping, piping and discharge arrangements.
157.12 Cargo monitor and control system.
157.13 Designated observation area.
157.15 Slop tanks in tank vessels.
157.17 Oily residue tank.
157.19 Cargo tank arrangement and size.
157.21 Subdivision and stability.
157.23 Cargo and ballast system information.
157.24 Submission of calculations, plans, and specifications.
157.24a Submission of calculations, plans, and specifications for existing vessels installing segregated ballast tanks.

Subpart C—Vessel Operation

157.25 Applicability of subpart C.
157.26 Operation of a tank vessel in violation of regulations.
157.27 Discharges: Tank vessels carrying oil exclusively on rivers, lakes, bays, sounds, and the Great Lakes, and seagoing tank vessels of less than 150 gross tons.
157.28 Discharges from tank barges exempted from certain design requirements.
157.29 Discharges: Seagoing tank vessels of 150 gross tons or more.
157.31 Discharges: Chemical additives.
157.33 Water ballast in oil fuel tanks.
157.35 Ballast added to cargo tanks.
157.37 Discharge of cargo residue.
157.39 Machinery space bilges.
157.41 Emergencies.
157.43 Discharges of clean and segregated ballast: Seagoing tank vessels of 150 gross tons or more.
157.45 Valves in cargo or ballast piping system.
157.47 Information for master.
157.49 Instruction manual.

Subpart D—Crude Oil Washing (COW) System on Tank Vessels

GENERAL

157.100 Plans for U.S. tank vessels: Submission.
157.102 Plans for foreign tank vessels: Submission.
157.104 Scale models.
157.106 Letter of acceptance.
157.108 Crude Oil Washing Operations and Equipment Manual for U.S. tank vessels: Submission.
157.110 Crude Oil Washing Operations and Equipment Manual for foreign tank vessels: Submission.
157.112 Approved Crude Oil Washing Operations and Equipment Manual.
157.114 Crude Oil Washing Operations and Equipment Manual: Not approved.
157.116 Required documents: U.S. tank vessels.

157.118 Required documents: Foreign tank vessels.
157.120 Waiver of required documents.

DESIGN, EQUIPMENT, AND INSTALLATION

157.122 Piping, valves, and fittings.
157.124 COW tank washing machines.
157.126 Pumps.
157.128 Stripping system.
157.130 Crude oil washing with more than one grade of crude oil.
157.132 Cargo tanks: Hydrocarbon vapor emissions.
157.134 Cargo tank drainage.
157.136 Two-way voice communications.
157.138 Crude Oil Washing Operations and Equipment Manual.

INSPECTIONS

157.140 Tank vessel inspections.
157.142 Letter of acceptance: Inspections.
157.144 Tank vessels of the same class: Inspections.
157.146 Similar tank design: Inspections on U.S. tank vessels.
157.147 Similar tank design: Inspections on foreign tank vessels.
157.148 COW system: Evidence for inspections.
157.150 Crude Oil Washing Operations and Equipment Manual: Recording information after inspections.

PERSONNEL

157.152 Person in charge of COW operations.
157.154 Assistant personnel.

COW OPERATIONS

157.155 COW operations: General.
157.156 COW operations: Meeting manual requirements.
157.158 COW operations: Changed characteristics.
157.160 Tanks: Ballasting and crude oil washing.
157.162 Crude oil washing during a voyage.
157.164 Use of inert gas system.
157.166 Hydrocarbon emissions.
157.168 Crew member: Main deck watch.
157.170 COW equipment: Removal.
157.172 Limitations on grades of crude oil carried.

Subpart E—Dedicated Clean Ballast Tanks on Tank Vessels

GENERAL

157.200 Plans for U.S. tank vessels: Submission.
157.202 Plans and documents for foreign tank vessels: Submission.
157.204 Letter of acceptance.
157.206 Dedicated Clean Ballast Tanks Operations Manual for U.S. tank vessels: Submission.
157.208 Dedicated Clean Ballast Tanks Operations Manual for foreign tank vessels: Submission.
157.210 Approved Dedicated Clean Ballast Tanks Operations Manual.
157.212 Dedicated Clean Ballast Tanks Operations Manual: Not approved.
157.214 Required documents: U.S. tank vessels.
157.216 Required documents: Foreign tank vessels.
157.218 Dedicated clean ballast tanks: Alterations.

DESIGN AND EQUIPMENT

157.220 Dedicated clean ballast tanks: Standards.
157.222 Pump and piping arrangements.
157.224 Dedicated Clean Ballast Tanks Operations Manual.

DEDICATED CLEAN BALLAST TANKS OPERATIONS

157.225 Dedicated clean ballast tanks operations: General.
157.226 Dedicated Clean Ballast Tanks Operations Manual: Procedures to be followed.
157.228 Isolating Valves: Closed during a voyage.

Subpart F—Exemption From § 157.10a or § 157.10c

157.300 Qualifications for exemptions under this part.
157.302 Applying for an exemption or requesting modification of an exemption.
157.304 Shore-based reception facility: standards.
157.306 Granting, denying, or modifying an exemption.
157.308 Revocation of exemption: procedure and appeals.
157.310 Exempted vessels: operations.

Subpart G—Interim Measures for Certain Tank Vessels Without Double Hulls Carrying Petroleum Oils

157.400 Purpose and applicability.
157.410 Emergency lightering requirements for oil tankers.
157.415 Bridge resource management policy and procedures.
157.420 Vessel specific watch policy and procedures.
157.430 Enhanced survey requirements.
157.435 Vital systems surveys.
157.440 Autopilot alarm or indicator.
157.445 Maneuvering performance capability.
157.450 Maneuvering and vessel status information.
157.455 Minimum under–keel clearance.
157.460 Additional operational requirements for tank barges.

Subpart H—Interim Measures for Certain Tank Vessels Without Double Hulls Carrying Animal Fat or Vegetable Oil

157.500 Purpose and applicability.
157.510 Operational measures.

Subpart I—Interim Measures for Certain Tank Vessels Without Double Hulls Carrying Other Non–Petroleum Oil

157.600 Purpose and applicability.
157.610 Operational measures.

APPENDICES TO PART 157

APPENDIX A—DAMAGE ASSUMPTIONS, HYPOTHETICAL OUTFLOWS, AND CARGO TANK SIZE AND ARRANGEMENTS
APPENDIX B—SUBDIVISION AND STABILITY ASSUMPTIONS
APPENDIX C—PROCEDURE FOR DETERMINING DISTRIBUTION OF SEGREGATED BALLAST TANKS TO PROVIDE PROTECTION AGAINST OIL OUTFLOW IN THE EVENT OF GROUNDING, RAMMING, OR COLLISION
APPENDIX D—EXAMPLE OF A PROCEDURE FOR DEDICATED CLEAN BALLAST TANKS OPERATIONS
APPENDIX E—SPECIFICATIONS FOR THE DESIGN, INSTALLATION AND OPERATION OF A PART FLOW SYSTEM FOR CONTROL OF OVERBOARD DISCHARGES
APPENDIX F—GUIDELINES AND SPECIFICATIONS FOR OIL DISCHARGE MONITORING AND CONTROL SYSTEMS FOR TANKERS
APPENDIX G—TIMETABLES FOR APPLICATION OF DOUBLE HULL REQUIREMENTS

AUTHORITY: 33 U.S.C. 1903; 46 U.S.C. 3703, 3703a (note); 49 CFR 1.46. Subparts G, H, and I are also issued under section 4115(b), Pub. L. 101–380, 104 Stat. 520; Pub. L. 104–55, 109 Stat. 546.

SOURCE: CGD 74–32, 40 FR 48283, Oct. 14, 1975, unless otherwise noted.

Subpart A—General

§ 157.01 Applicability.

(a) Unless otherwise indicated, this part applies to each vessel that carries oil in bulk as cargo and that is:

(1) Documented under the laws of the United States (a U.S. vessel); or

(2) Any other vessel that enters or operates in the navigable waters of the United States, or that operates, conducts ligtering under 46 U.S.C. 3715, or receives cargo from or transfers cargo to a deepwater port under 33 U.S.C. 1501 *et seq.*, in the United States Exclusive Economic Zone, as defined in 33 U.S.C. 2701(8).

(b) This part does not apply to a vessel exempted under 46 U.S.C. 2109 or 46 U.S.C. 3702.

[CGD 90–051, 57 FR 36238, Aug. 12, 1992, as amended by CGD 91–045, 61 FR 39788, July 30, 1996]

§ 157.02 Incorportion by reference.

(a) Certain material is incorporated by reference into this part with the approval of the Director of the Federal Register under 5 U.S.C. 552(a) and 1 CFR part 51. To enforce any edition other than that specified in paragraph (b) of this section, the Coast Guard must publish notice of change in the FEDERAL REGISTER; and the material must be available to the public. All approved material is available for inspection at the Office of the Federal Register, 800 North Capitol Street NW., suite 700, Washington, DC, and at the U.S. Coast Guard, Office of Operating and Environmental Standards (G–MSO), 2100 Second Street SW., Washington, DC 20593–0001, and is available from the sources indicated in paragraph (b) of this section.

(b) The material approved for incorporation by reference in this part and the sections affected are as follows:

International Maritime Organization (IMO)—4 Albert Embankment, London SE1 7SR, England.

IMO Assembly Resolution A.601(15), Provision and Display of Manoeuvring Information on Board Ships, Annex sections 1.1, 2.3, 3.1, and 3.2 with appendices, adopted on 19 November 1987 ..... 157.450

IMO Assembly Resolution A.744(18), Guidelines on the Enhanced Programme of Inspections During Surveys of Bulk Carriers and Oil Tankers, Annex B sections 1.1.3–1.1.4, 1.2–1.3, 2.1, 2.3–2.6, 3–8, and Annexes 1–10 with appendices, adopted 4 November 1993 ..... 157.430

IMO Assembly Resolution A.751(18), Interim Standards for Ship Manoeuvrability, Annex sections 1.2, 2.3–2.4, 3–4.2, and 5, adopted 4 November 1993 with Explanatory Notes in MSC/Circ. 644 dated 6 June 1994 ..... 157.445

Oil Companies International Marine Forum (OCIMF)—15th Floor, 96 Victoria Street, London, SW1E 5JW, England.
International Safety Guide for Oil Tankers and Terminals, Fourth Edition, Chapters 6, 7, and 10, 1996 ..... 157.435

[CGD 91–045, 61 FR 39788, July 30, 1996; 61 FR 41685, Aug. 9, 1996]

§157.03 Definitions.

Except as otherwise stated in a subpart:

Amidships means the middle of the length.

Animal fat means a non-petroleum oil, fat, or grease derived from animals and not specifically identified elsewhere in this part.

Ballast voyage means the voyage that a tank vessel engages in after it leaves the port of final cargo discharge.

Breadth or *B* means the maximum molded breadth of a vessel in meters.

Cargo tank length means the length from the forward bulkhead of the forwardmost cargo tanks, to the after bulkhead of the aftermost cargo tanks.

Center tank means any tank inboard of a longitudinal bulkhead.

Clean ballast means ballast which:

(1) If discharged from a vessel that is stationary into clean, calm water on a clear day, would not—

(i) Produce visible traces of oil on the surface of the water or on adjoining shore lines; or

(ii) Cause a sludge or emulsion to be deposited beneath the surface of the water or upon adjoining shore lines; or

(2) If verified by an approved cargo monitor and control system, has an oil content that does not exceed 15 p.m.

Combination carrier means a vessel designed to carry oil or solid cargoes in bulk.

Crude oil means any liquid hydrocarbon mixture occurring naturally in the earth, whether or not treated to render it suitable for transportation, and includes crude oil from which certain distillate fractions may have been removed, and crude oil to which certain distillate fractions may have been added.

Deadweight or *DWT* means the difference in metric tons between the lightweight displacement and the total displacement of a vessel measured in water of specific gravity 1.025 at the load waterline corresponding to the assigned summer freeboard.

Dedicated clean ballast tank means a cargo tank that is allocated solely for the carriage of clean ballast.

Domestic trade means trade between ports or places within the United States, its territories and possessions, either directly or via a foreign port including trade on the navigable rivers, lakes, and inland waters.

Double bottom means watertight protective spaces that do not carry any oil and which separate the bottom of tanks that hold any oil within the cargo tank length from the outer skin of the vessel.

Double hull means watertight protective spaces that do not carry any oil and which separate the sides, bottom, forward end, and aft end of tanks that hold any oil within the cargo tank length from the outer skin of the vessel as prescribed in §157.10d.

Doubles sides means watertight protective spaces that do not carry any oil and which separate the sides of tanks that hold any oil within the cargo tank length from the outer skin of the vessel.

Existing vessel means any vessel that is not a new vessel.

Fleeting or assist towing vessel means any commercial vessel engaged in towing astern, alongside, or pushing ahead, used solely within a limited geographic area, such as a particular barge fleeting area or commercial facility, and used solely for restricted service, such as making up or breaking up larger tows.

Foreign trade means any trade that is not domestic trade.

From the nearest land means from the baseline from which the territorial sea of the United States is established in accordance with international law.

Inland vessel means a vessel that is not oceangoing and that does not operate on the Great Lakes.

Instantaneous rate of discharge of oil content means the rate of discharge of

oil in liters per hour at any instant, divided by the speed of the vessel in knots at the same instant.

Integrated tug barge means a tug and a tank barge with a mechanical system that allows the connection of the propulsion unit (the tug) to the stern of the cargo carrying unit (the tank barge) so that the two vessels function as a single self-propelled vessel.

Large primary structural member includes any of the following:

(1) Web frames.

(2) Girders.

(3) Webs.

(4) Main brackets.

(5) Transverses.

(6) Stringers.

(7) Struts in transverse web frames when there are 3 or more struts and the depth of each is more than 1/15 of the total depth of the tank.

Length or *L* means the distance in meters from the fore side of the stem to the axis of the rudder stock on a waterline at 85 percent of the least molded depth measured from the molded baseline, or 96 percent of the total length on that waterline, whichever is greater. In vessels designed with drag, the waterline is measured parallel to the designed waterline.

Lightweight means the displacement of a vessel in metric tons without cargo, oil fuel, lubricating oil, ballast water, fresh water, and feedwater in tanks, consumable stores, and any persons and their effects.

Major conversion means a conversion of an existing vessel that:

(1) Substantially alters the dimensions or carrying capacity of the vessel, except a conversion that includes only the installation of segregated ballast tanks, dedicated clean ballast tanks, a crude oil washing system, double sides, a double bottom, or a double hull;

(2) Changes the type of vessel;

(3) Substantially prolongs the vessel's service life; or

(4) Otherwise so changes the vessel that it is essentially a new vessel, as determined by the Commandant (G–MOC).

MARPOL Protocol means the Protocol of 1978 Relating to the International Convention for the Prevention of Pollution from Ships, 1973, done at London on February 17, 1978. This Protocol incorporates and modifies the International Convention for the Prevention of Pollution from Ships, 1973, done at London on November 2, 1973.

New vessel means:

(1) A U.S. vessel in domestic trade that:

(i) Is constructed under a contract awarded after December 31, 1974;

(ii) In the absence of a building contract, has the keel laid or is at a similar stage of construction after June 30, 1975;

(iii) Is delivered after December 31, 1977; or

(iv) Has undergone a major conversion for which:

(A) The contract is awarded after December 31, 1974;

(B) In the absence of a contract, conversion is begun after June 30, 1975; or

(C) Conversion is completed after December 31, 1977; and

(2) A foreign vessel or a U.S. vessel in foreign trade that:

(i) Is constructed under a contract awarded after December 31, 1975;

(ii) In the absence of a building contract, has the keel laid or is at a similar stage of construction after June 30, 1976;

(iii) Is delivered after December 31, 1979; or

(iv) Has undergone a major conversion for which:

(A) The contract is awarded after December 31, 1975;

(B) In the absence of a contract, conversion is begun after June 30, 1976; or

(C) Conversion is completed after December 31, 1979.

Non-petroleum oil means oil of any kind that is not petroleum-based. It includes, but is not limited to, animal fat and vegetable oil.

Oceangoing has the same meaning as defined in § 151.05 of this chapter.

Officer in charge of a navigational watch means any officer employed or engaged to be responsible for navigating or maneuvering the vessel and for maintaining a continuous vigilant watch during his or her periods of duty and following guidance set out by the master, international or national regulations, and company policies.

Oil means oil of any kind or in any form including, but not limited to, petroleum, fuel oil, sludge, oil refuse, and oil mixed with wastes other than dredged spoil. This includes liquid hydrocarbons as well as animal and vegetable oils.

Oil fuel means any oil used as fuel for machinery in the vessel in which it is carried.

Oil spill response vessel means a vessel that is exclusively dedicated to operations to prevent or mitigate environmental damage due to an actual or impending accidental oil spill. This includes a vessel that performs routine service as an escort for a tank vessel, but excludes a vessel that engages in any other commercial activity, such as the carriage of any type of cargo.

Oil tanker means a vessel that is constructed or adapted primarily to carry crude oil or products in bulk as cargo. This includes a tank barge, a tankship, and a combination carrier, as well as a vessel that is constructed or adapted primarily to carry noxious liquid substances in bulk as cargo and which also carries crude oil or products in bulk as cargo.

Oily mixture means a mixture with any oil content.

Other non-petroleum oil means an oil of any kind that is not petroleum oil, an animal fat, or a vegetable oil.

Permeability of a space means the ratio of the volume within a space that is assumed to be occupied by water to the total volume of that space.

Petroleum oil means petroleum in any form including crude oil, fuel oil, mineral oil, sludge, oil refuse, and refined products.

Primary towing vessel means any vessel engaged in towing astern, alongside, or pushing ahead and includes the tug in an integrated tug barge. It does not include fleeting or assist towing vessels.

Product means any liquid hydrocarbon mixture in any form, except crude oil, petrochemicals, and liquefied gases.

Segregated ballast means the ballast water introduced into a tank that is completely separated from the cargo oil and oil fuel system and that is permanently allocated to the carriage of ballast.

Slop tank means a tank specifically designated for the collection of cargo drainings, washings, and other oil mixtures.

Tank means an enclosed space that is formed by the permanent structure of a vessel, and designed for the carriage of liquid in bulk.

Tank barge means a tank vessel not equipped with a means of self-propulsion.

Tank vessel means a vessel that is constructed or adapted primarily to carry, or that carries, oil or hazardous material in bulk as cargo or cargo residue, and that—

(1) Is a vessel of the United States;

(2) Operates on the navigable waters of the United States; or

(3) Transfers oil or hazardous material in a port or place subject to the jurisdiction of the United States. This does not include an offshore supply vessel, or a fishing vessel or fish tender vessel of not more than 750 gross tons when engaged only in the fishing industry.

Tankship means a tank vessel propelled by mechanical power or sail.

Vegetable oil means a non-petroleum oil or fat not specifically identified elsewhere in this part that is derived from plant seeds, nuts, kernels, or fruits.

Wing tank means a tank that is located adjacent to the side shell plating.

[CGD 96–026, 61 FR 33666, June 28, 1996; 61 FR 36786, July 12, 1996, as amended by CGD 91–045, 61 FR 39788, July 30, 1996]

§157.04 Authorization of classification societies.

(a) The Coast Guard may authorize any classification society (CS) to perform certain plan reviews, certifications, and inspections required by this part on vessels classed by that CS, except that only U.S. classification societies may be authorized to perform those plan reviews, inspections, and certifications for U.S. vessels.

(b) If a CS desires authorization to perform the plan reviews, certifications, and inspections required under this part, it must submit to the Commandant (G–MOC), U.S. Coast Guard, Washington, DC 20593–0001, evidence from the governments concerned showing that they have authorized the CS

to inspect and certify vessels on their behalf under the MARPOL Protocol.

(c) The Coast Guard notifies the CS in writing whether or not it is accepted as an authorized CS. If authorization is refused, reasons for the refusal are included.

(d) Acceptance as an authorized CS terminates unless the following are met:

(1) The authorized CS must have each Coast Guard regulation that is applicable to foreign vessels on the navigable waters of the United States.

(2) Each issue concerning equivalents to the regulations in this part must be referred to the Coast Guard for determination.

(3) Copies of any plans, calculations, records of inspections, or other documents relating to any plan review, inspection, or certification performed to meet this part must be made available to the Coast Guard.

(4) Each document certified under §§ 157.116(a)(2), 157.118(b)(1)(ii), and 157.216(b)(1)(ii) must be marked with the name or seal of the authorized CS.

(5) A copy of the final documentation that is issued to each vessel that is certified under this part must be referred to the Commandant (G–MOC), U.S. Coast Guard, Washington, D.C. 20593–0001.

(Reporting and recordkeeping requirements approved by the Office of Management and Budget under control number 2115–0520)

[CGD 82–28, 50 FR 11625, and 11630, Mar. 22, 1985, as amended by CGD 88–052, 53 FR 25122, July 1, 1988; CGD 96–026, 61 FR 33668, June 28, 1996]

§ 157.05 Performing calculations for this part.

In this part, unless the context requires otherwise:

(a) Formulas are in the International System of Units (SI);

(b) Values used in those formulas must be in the International System of Units; and

(c) Forward and after perpendiculars are located at the forward end and at the after end of the length. The forward perpendicular coincides with the foreside of the stem on the waterline on which the length of the vessel is measured.

§ 157.06 Appeals.

(a) Any person directly affected by an action taken under this part may request reconsideration by the Coast Guard official who is responsible for that action.

(b) Any person not satisfied with a ruling made under the procedure contained in paragraph (a) of this section may appeal that ruling in writing, except as allowed under paragraph (e) of this section, to the Coast Guard District Commander of the district in which the action was taken. The appeal may contain supporting documentation and evidence that the appellant wishes to have considered. If requested, the District Commander may stay the effect of the action being appealed while the ruling is being reviewed. The District Commander issues a ruling after reviewing the appeal submitted under this paragraph.

(c) Any person not satisfied with a ruling made under the procedure contained in paragraph (b) of this section may appeal that ruling in writing, except as allowed under paragraph (e) of this section, to the Assistant Commandant for Marine Safety and Environmental Protection, U.S. Coast Guard, Washington, DC 20593–0001. The appeal may contain supporting documentation and evidence that the appellant wishes to have considered. If requested, the Assistant Commandant for Marine Safety and Environmental Protection may stay the effect of the action being appealed while the ruling is being reviewed. The Chief, Marine Safety and Environmental Protection issues a ruling after reviewing the appeal submitted under this paragraph.

(d) Any decision made by the Assistant Commandant for Marine Safety and Environmental Protection under the procedure contained in paragraph (c) of this section is final agency action.

(e) If the delay in presenting a written appeal would have a significant adverse impact on the appellant, the appeal under paragraph (b) or (c) of this section may initially be presented orally. If an initial presentation of the appeal is made orally, the appellant must submit the appeal in writing within five days of the oral presentation to the Coast Guard official to whom the

oral presentation was made. The written appeal must contain, at a minimum the basis for the appeal and a summary of the material presented orally.

[CGD 77–058b, 45 FR 43706, June 30, 1980, as amended by CGD 88–052, 53 FR 25122, July 1, 1988; CGD 96–026, 61 FR 33667, 33668, June 28, 1996; CGD 97–023, 62 FR 33364, June 19, 1997]

§157.07 Equivalents.

The Coast Guard may accept an equivalent, in accordance with the procedure in 46 CFR 30.15–1, of a design or an equipment to fulfill a requirement in this Part, except an operational method may not be substituted for a design or equipment requirement that is also required under the MARPOL Protocol.

[CGD 82–28, 50 FR 11625, Mar. 22, 1985, as amended by CGD 97–023, 62 FR 33364, June 19, 1997]

Subpart B—Design, Equipment, and Installation

§157.08 Applicability of Subpart B.

NOTE: An ''oil tanker'' as defined in §157.03 includes barges as well as self-propelled vessels.

(a) Sections 157.10d and 157.11(g) apply to each vessel to which this part applies.

(b) Sections 157.11 (a) through (f), 157.12, 157.15, 157.19(b)(3), 157.33, and 157.37 apply to each vessel to which this part applies that carries 200 cubic meters or more of crude oil or products in bulk as cargo, as well as to each oceangoing oil tanker to which this part applies of 150 gross tons or more. These sections do not apply to a foreign vessel which remains beyond the navigable waters of the United States and does not transfer oil cargo at a port or place subject to the jurisdiction of the United States.

(c) Section 157.21 applies to each oil tanker to which this part applies of 150 gross tons or more that is oceangoing or that operates on the Great Lakes. This section does not apply to a foreign vessel which remains beyond the navigable waters of the United States and does not transfer oil cargo at a port or place subject to the jurisdiction of the United States.

(d) Sections in subpart B of 33 CFR part 157 that are not specified in paragraphs (a) through (c) of this section apply to each oceangoing oil tanker to which this part applies of 150 gross tons or more, unless otherwise indicated in paragraphs (e) through (m) of this section. These sections do not apply to a foreign vessel which remains beyond the navigable waters of the United States and does not transfer oil cargo at a port or place subject to the jurisdiction of the United States.

(e) Sections 157.11 (a) through (f), 157.12, and 157.15 do not apply to a vessel, except an oil tanker, that carries less than 1,000 cubic meters of crude oil or products in bulk as cargo and which retains oily mixtures on board and discharges them to a reception facility.

(f) Sections 157.11 (a) through (f), 157.12, 157.13, and 157.15 do not apply to a tank vessel that carries only asphalt, carbon black feedstock, or other products with similar physical properties, such as specific gravity and cohesive and adhesive characteristics, that inhibit effective product/water separation and monitoring.

(g) Sections 157.11 (a) through (f), 157.12, 157.13, 157.15, and 157.23 do not apply to a tank barge that cannot ballast cargo tanks or wash cargo tanks while underway.

(h) Sections 157.19 and 157.21 do not apply to a tank barge that is certificated by the Coast Guard for limited short protected coastwise routes if the barge is otherwise constructed and certificated for service exclusively on inland routes.

(i) Section 157.09(d) does not apply to any:

(1) U.S. vessel in domestic trade that is constructed under a contract awarded before January 8, 1976;

(2) U.S. vessel in foreign trade that is constructed under a contract awarded before April 1, 1977; or

(3) Foreign vessel that is constructed under a contract awarded before April 1, 1977.

(j) Sections 157.09 and 157.10a do not apply to a new vessel that:

(1) Is constructed under a building contract awarded after June 1, 1979;

(2) In the absence of a building contract, has the keel laid or is at a similar stage of construction after January 1, 1980;

(3) Is delivered after June 1, 1982; or

(4) Has undergone a major conversion for which:

(i) The contract is awarded after June 1, 1979;

(ii) In the absence of a contract, conversion is begun after January 1, 1980; or

(iii) Conversion is completed after June 1, 1982.

(k) Sections 157.09(b)(3), 157.10(c)(3), 157.10a(d)(3), and 157.10b(b)(3) do not apply to tank barges.

(l) Section 157.10b does not apply to tank barges if they do not carry ballast while they are engaged in trade involving the transfer of crude oil from an offshore oil exploitation or production facility on the Outer Continental Shelf of the United States.

(m) Section 157.12 does not apply to a U.S. vessel that:

(1) Is granted an exemption under Subpart F of this part; or

(2) Is engaged solely in voyages that are:

(i) Between ports or places within the United States, its territories or possessions;

(ii) Of less than 72 hours in length; and

(iii) At all times within 50 nautical miles of the nearest land.

(n) Section 157.10d does not apply to:

(1) A vessel that operates exclusively beyond the navigable waters of the United States and the United States Exclusive Economic Zone, as defined in 33 U.S.C. 2701(8);

(2) An oil spill response vessel;

(3) Before January 1, 2015—

(i) A vessel unloading oil in bulk as cargo at a deepwater port licensed under the Deepwater Port Act of 1974 (33 U.S.C. 1501 *et seq.*); or

(ii) A delivering vessel that is offloading oil in bulk as cargo in lightering activities—

(A) Within a lightering zone established under 46 U.S.C. 3715(b)(5); and

(B) More than 60 miles from the territorial sea base line, as defined in 33 CFR 2.05–10.

(4) A vessel documented under 46 U.S.C., Chapter 121, that was equipped with a double hull before August 12, 1992;

(5) A barge of less than 1,500 gross tons as measured under 46 U.S.C., Chapter 145, carrying refined petroleum in bulk as cargo in or adjacent to waters of the Bering Sea, Chukchi Sea, and Arctic Ocean and waters tributary thereto and in the waters of the Aleutian Islands and the Alaskan Peninsula west of 155 degrees west longitude; or

(6) A vessel in the National Defense Reserve Fleet pursuant to 50 App. U.S.C. 1744.

[CGD 75–240, 41 FR 54179, Dec. 13, 1976, as amended by CGD 77–058b, 45 FR 43707, June 30, 1980; CGD 79–152, 45 FR 82249, Dec. 15, 1980; CGD 76–088b, 48 FR 45720, Oct. 6, 1983; CGD 90–051, 57 FR 36239, Aug. 12, 1992; 57 FR 40494, Sept. 3, 1992; CGD 97–023, 62 FR 33364, June 19, 1997]

§ 157.09 Segregated ballast.

(a) A new vessel of 70,000 tons DWT or more must have segregated ballast tanks that have a total capacity to allow the vessel to meet the draft and trim requirements in paragraph (b) of this section without recourse to the use of oil tanks for water ballast.

(b) In any ballast condition during any part of a voyage, including that of lightweight with only segregated ballast, the vessel's drafts and trim must have the capability of meeting each of the following requirements:

(1) The molded draft amidship (dm) in meters without taking into account vessel deformation must not be less than dm in the following mathematical relationship:

$$dm=2.0+0.02L$$

(2) The drafts at the forward and after perpendiculars must correspond to those determined by the draft amidship as specified in paragraph (b)(1) of this section, in association with the trim by the stern of no more than 0.015L.

(3) The minimum allowable draft at the after perpendicular is that which is necessary to obtain full immersion of the propeller.

(c) The vessel may be designed to carry ballast water in cargo tanks during the condition described in § 157.35.

(d) Segregated ballast spaces, voids, and other noncargo-carrying spaces for

a vessel of conventional form must be distributed:

(1) So that the mathematical average of the hypothetical collision (O_c) and the hypothetical stranding (O_s) outflows as determined by the application of the procedures in §157.19 and Appendix B is 80 percent or less of the maximum allowable outflow (O_A) as determined by §157.19(b)(1); and

(2) To protect at least 45 percent of the sum of the side and bottom shell areas, based upon projected molded dimensions, within the cargo tank length. When the vessel design configuration does not provide for the spaces to be distributed to protect at least 45 percent of the side and bottom shell areas, the spaces must be distributed so that the mathematical average of the hypothetical collision (O_c) and the hypothetical stranding (O_s) outflows, determined by application of the procedures in §157.19 and Appendix B, is a further 2 percent less than the maximum allowable outflow (O_a) for each 1 percent by which the shell area protection coverage required is not achieved.

(e) A ballast space, void or other noncargo-carrying space used to meet requirements in paragraph (d) of this section must separate the cargo tank boundaries from the shell plating of the vessel by at least 2 meters.

(f) A vessel of conventional form for application of this section has:

(1) A block coefficient of .80 or greater,

(2) A length to depth ratio between 12 and 16, and

(3) A breadth to depth ratio between 1.5 and 3.5.

(g) Segregated ballast spaces, voids, and other noncargo-carrying spaces for a vessel not of conventional form must be distributed in a configuration acceptable to the Coast Guard.

[CGD 74–32, 40 FR 48283, Oct. 14, 1975, as amended by CGD 74–32, 40 FR 49328, Oct. 22, 1975; CGD 75–201, 41 FR 1482, Jan. 8, 1976]

§157.10 Segregated ballast tanks and crude oil washing systems for certain new vessels.

(a) This section applies to a new vessel that:

(1) Is constructed under a building contract awarded after June 1, 1979;

(2) In the absence of a building contract, has the keel laid or is at a similar stage of construction after January 1, 1980;

(3) Is delivered after June 1, 1982; or

(4) Has undergone a major conversion for which:

(i) The contract is awarded after June 1, 1979;

(ii) In the absence of a contract, conversion is begun after January 1, 1980; or

(iii) Conversion is completed after June 1, 1982.

(b) Each tank vessel under this section of 20,000 DWT or more that carries crude oil and of 30,000 DWT or more that carries products must have segregated ballast tanks that have a total capacity to allow the vessel to meet the draft and trim requirements in paragraph (c) of this section without recourse to the use of cargo tanks for water ballast.

(c) In any ballast condition during any part of a voyage, including that of lightweight with only segregated ballast, each tank vessel under paragraph (b) of this section must have the capability of meeting each of the following:

(1) The molded draft amidship (dm) in meters, without taking into account vessel deformation, must not be less than dm in the following mathematical relationship:

$$dm = 2.0 + 0.02L$$

(2) The drafts at the forward and after perpendiculars must correspond to those determined by the draft amidship under paragraph (c)(1) of this section, in association with a trim by the stern of no more than 0.015L.

(3) The minimum draft at the after perpendicular is that which is necessary to obtain full immersion of the propeller.

(d) Segregated ballast tanks required in paragraph (b) of this section, voids, and other spaces that do not carry cargo must be distributed:

(1) For a vessel to which §157.10d applies, in accordance with §157.10d(c)(4); or,

(2) For a vessel to which §157.10d does not apply, in accordance with the procedure contained in appendix C to this part.

(e) Each tank vessel under this section of 20,000 DWT or more that carries

crude oil must have a crude oil washing system that meets the design, equipment, and installation requirements in Subpart D of this part.

(f) Each tank vessel under this section may be designed to carry ballast water in cargo tanks as allowed under § 157.35.

[CGD 77–058b, 45 FR 43707, June 30, 1980, as amended by CGD 90–051, 57 FR 36239, Aug. 12, 1992]

§ 157.10a Segregated ballast tanks, crude oil washing systems, and dedicated clean ballast tanks for certain new and existing vessels of 40,000 DWT or more.

(a) An existing vessel of 40,000 DWT or more that carries crude oil and a new vessel of 40,000 DWT or more but less than 70,000 DWT that carries crude oil must have:

(1) Segregated ballast tanks with a total capacity to meet the draft and trim requirements in paragraph (d) of this section; or

(2) A crude oil washing system that meets the design, equipment, and installation requirements of Subpart D of this part.

(b) [Reserved]

(c) An existing vessel of 40,000 DWT or more that carries products and a new vessel of 40,000 DWT or more but less than 70,000 DWT that carries products must have:

(1) Segregated ballast tanks with a total capacity to meet the draft and trim requirements in paragraph (d) of this section; or

(2) Dedicated clean ballast tanks that have a total capacity to meet the draft and trim requirements in paragraph (d) of this section and that meet the design and equipment requirements under Subpart E of this part.

(d) In any ballast condition during any part of a voyage, including that of lightweight with either segregated ballast in segregated ballast tanks or clean ballast in dedicated clean ballast tanks, each tank vessel under paragraph (a)(1), or (c) of this section must have the capability of meeting each of the following without recourse to the use of cargo tanks for water ballast:

(1) The molded draft amidship (dm) in meters, without taking into account vessel deformation, must not be less than dm in the following mathematical relationship:

$$dm=2.0+0.02L$$

(2) The drafts at the forward and after perpendiculars must correspond to those determined by the draft amidship under paragraph (d)(1) of this section, in association with a trim by the stern of no more than 0.015L.

(3) The minimum draft at the after perpendicular is that which is necessary to obtain full immersion of the propeller.

(e) Each tank vessel that meets paragraph (a)(1), or (c) of this section may be designed to carry ballast water in cargo tanks as allowed under § 157.35.

NOTE: Segregated ballast tanks located in wing tanks provide protection against oil outflow in the event of a collision, ramming, or grounding.

[CGD 77–058b, 45 FR 43707, June 30, 1980, as amended by CGD 82–28, 50 FR 11626, Mar. 22, 1985; USCG–1998–3799, 63 FR 35531, June 30, 1998]

§ 157.10b Segregated ballast tanks, dedicated clean ballast tanks, and special ballast arrangements for tank vessels transporting Outer Continental Shelf oil.

(a) Each tank vessel that is engaged in the transfer of crude oil from an offshore oil exploitation or production facility on the Outer Continental Shelf of the United States on or after June 1, 1980 must, if segregated ballast tanks or dedicated clean ballast tanks are not required under § 157.09, § 157.10 or § 157.10a, have one of the following:

(1) Segregated ballast tanks with a total capacity to meet the draft and trim requirements in paragraph (b) of this section.

(2) Dedicated clean ballast tanks having a total capacity to meet the draft and trim requirements in paragraph (b) of this section and meeting the design and equipment requirements under Subpart E of this part.

(3) Special ballast arrangements acceptable to the Coast Guard.

(b) In any ballast condition during any part of a voyage, including that of lightweight with either segregated ballast in segregated ballast tanks or clean ballast in dedicated clean ballast tanks, each vessel under paragraph (a)(1) or (a)(2) of this section must have

the capability of meeting each of the following:

(1) The molded draft amidship (dm), in meters, without taking into account vessel deformation, must not be less than ''dm'' in the following mathematical relationship:

dm=2.00+0.020L for vessels of 150 meters or more in length

dm=1.25+0.025L for vessels less than 150 meters in length

(2) The drafts, in meters, at the forward and after perpendiculars must correspond to those determined by the draft amidship under paragraph (b)(1) of this section, in association with a trim, in meters, by the stern (t) of no more than ''t'' in the following mathematical relationship:

t=0.015L for vessels of 150 meters or more in length

t=1.5+0.005L for vessels less than 150 meters in length

(3) The minimum draft at the after perpendicular is that which is necessary to obtain full immersion of the propeller.

(c) Special ballast arrangements are accepted under the procedures in paragraph (d) of this section if:

(1) The vessel is dedicated to one specific route;

(2) Each offshore transfer facility on the route is less than 50 miles from shore;

(3) The duration of the ballast voyage is less than 10 hours;

(4) They prevent the mixing of ballast water and oil; and

(5) They provide suitable draft and trim to allow for the safe navigation of the vessel on the intended route.

(d) The owner or operator of a vessel that meets paragraph (c) of this section must apply for acceptance of the special ballast arrangement, in writing, to the Officer in Charge, Marine Inspection, of the zone in which the vessel operates. The application must contain:

(1) The specific route on which the vessel would operate;

(2) The type of ballast to be carried;

(3) The location of the ballast on the vessel;

(4) Calculations of draft and trim for maximum ballast conditions; and

(5) The associated operating requirements or limitations necessary to ensure safe navigation of the vessel.

NOTE: Operating requirements or limitations necessary to ensure safe navigation of the vessel could include (but are not limited to) weather conditions under which the vessel would not operate and weather conditions under which cargo would be carried in certain cargo tanks on the ballast voyage.

(e) The Coast Guard will inform each applicant for special ballast arrangements under paragraph (d) of this section whether or not the arrangements are accepted. If they are not accepted, the reasons why they are not accepted will be stated.

(f) Each tank vessel under this section may be designed to carry ballast water in cargo tanks, as allowed under §157.35.

[CGD 79–152, 45 FR 82249, Dec. 15, 1980]

§157.10c Segregated ballast tanks, crude oil washing systems, and dedicated clean ballast tanks for certain new and existing tankships of 20,000 to 40,000 DWT.

(a) This section applies to each tankship of 20,000 DWT or more, but less then 40,000 DWT, except each one that—

(1) Is constructed under a building contract awarded after June 1, 1979;

(2) In the absence of a building contract, has the keel laid or is at a similar stage of construction after January 1, 1980;

(3) Is delivered after June 1, 1982; or

(4) Has undergone a major conversion, for which—

(i) The contract is awarded after June 1, 1979; or

(ii) Conversion is completed after June 1, 1982.

(b) On January 1, 1986, or 15 years after the date it was delivered to the original owner or 15 years after the completion of a major conversion, whichever is later, a vessel under this section that carries crude oil must have—

(1) Segregated ballast tanks that have a total capacity to allow the vessel to meet the draft and trim requirements in §157.09(b); or

(2) A crude oil washing system that meets the design, equipment, and installation requirements of §§157.122 through 157.138.

(c) On January 1, 1986, or 15 years after the date it was delivered to the original owner or 15 years after the completion of a major conversion, whichever is later, a vessel under this section that carries product must have—

(1) Segregated ballast tanks that have total capacity to allow the vessel to meet the draft and trim requirements in § 157.09(b); or

(2) Dedicated clean ballast tanks that meet the design and equipment requirements under §§ 157.220, 157.222, and 157.224 and have total capacity to allow the vessel to meet the draft and trim requirements in § 157.09(b).

(d) If the arrangement of tanks on a vessel under this section is such that, when using the tankage necessary to comply with the draft and trim requirements in §157.09(b), the draft amidships exceeds the minimum required draft by more the 10 percent, or the arrangement results in the propeller being fully immersed by more than 10 percent of its diameter, alternative arrangements may be accepted provided—

(1) At least 80 percent of the propeller diameter is immersed; and

(2) The moulded draft amidships is at least 80 percent of that required under § 157.09(b)(1).

[CGD 82–28, 50 FR 11626, Mar. 22, 1985; 50 FR 12800, Apr. 1, 1985]

§ 157.10d Double hulls on tank vessels.

(a) With the exceptions stated in § 157.08(n), this section applies to a tank vessel—

(1) For which the building contract is awarded after June 30, 1990;

(2) That is delivered after December 31, 1993;

(3) That undergoes a major conversion for which;

(i) The contract is awarded after June 30, 1990; or

(ii) Conversion is completed after December 31, 1993; or

(4) That is otherwise required to have a double hull by 46 U.S.C. 3703a(c).

NOTE: 46 U.S.C. 3703a(c) is shown in appendix G to this part.

(b) Each vessel to which this section applies must be fitted with:

(1) A double hull in accordance with this section; and

(2) If § 157.10 applies, segregated ballast tanks and a crude oil washing system in accordance with that section.

(c) Except on a vessel to which § 157.10d(d) applies, tanks within the cargo tank length that carry any oil must be protected by double sides and a double bottom as follows:

(1) Double sides must extend for the full depth of the vessel's side or from the uppermost deck, disregarding a rounded gunwale where fitted, to the top of the double bottom. At any cross section, the molded width of the double side, measured at right angles to the side shell plating, from the side of tanks containing oil to the side shell plating, must not be less than the distance w as shown in Figure 157.10d(c) and specified as follows:

(i) For a vessel of 5,000 DWT and above: w=[0.5+(DWT/20,000)] meters; or, w=2.0 meters (79 in.), whichever is less, but in no case less than 1.0 meter (39 in.).

(ii) For a vessel of less than 5,000 DWT: w=[0.4+(2.4)(DWT/20,000)] meters, but in no case less than 0.76 meter (30 in.).

(iii) For a vessel to which paragraph (a)(4) of this section applies: w=0.76 meter (30 in.), provided that the double side was fitted under a construction or conversion contract awarded prior to June 30, 1990.

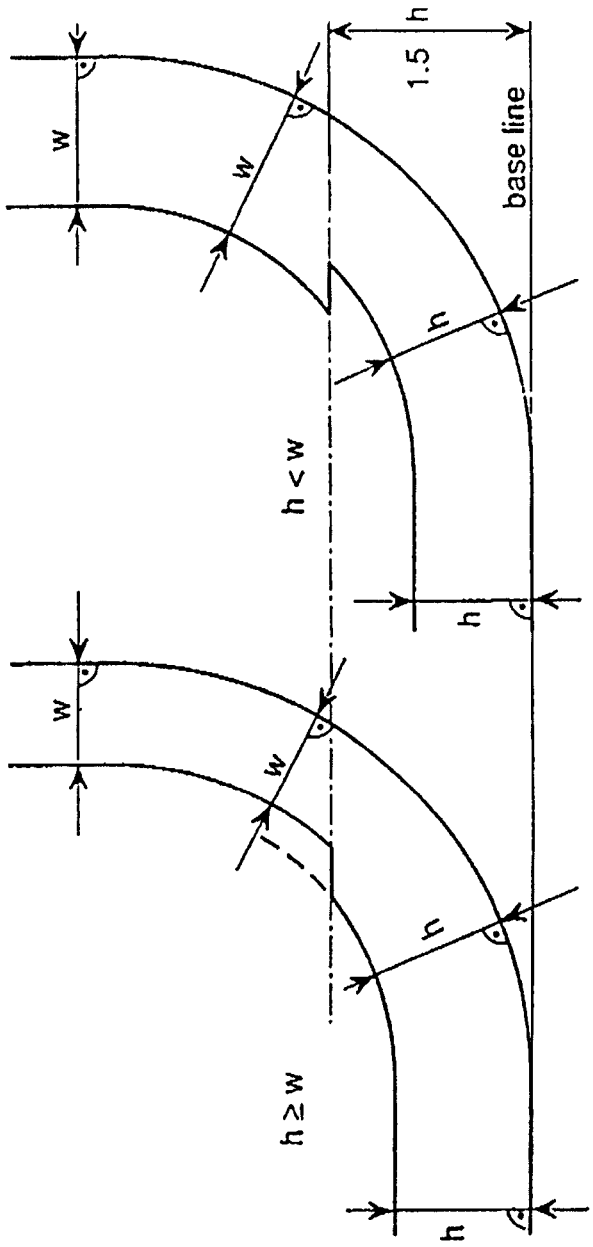

FIGURE 157.10d(c) Minimum Double Hull Dimensions

(2) At any cross section, the molded depth of the double bottom, measured at right angles to the bottom shell plating, from the bottom of tanks containing oil to the bottom shell plating, must not be less than the distance *h* as shown in Figure 157.10d(c) and specified as follows:

(i) For a vessel of 5,000 DWT and above: h=B/15; or, h=2.0 meters (79 in.), whichever is less, but in no case less than 1.0 meter (39 in.).

(ii) For a vessel of less than 5,000 DWT: h=B/15, but in no case less than 0.76 meter (30 in.).

(iii) For a vessel to which paragraph (a)(4) of this section applies: h=B/15; or, h=2.0 meters (79 in.), whichever is the lesser, but in no case less than 0.76 meter (30 in.), provided that the double bottom was fitted under a construction or conversion contract awarded prior to June 30, 1990.

(3) For a vessel built under a contract awarded after September 11, 1992, within the turn of the bilge or at cross sections where the turn of the bilge is not clearly defined, tanks containing oil must be located inboard of the outer shell—

(i) For a vessel of 5,000 DWT and above: At levels up to 1.5h above the base line, not less than the distance h, as shown in Figure 157.10d(c) and specified in paragraph (c)(2) of this section. At levels greater than 1.5h above the base line, not less than the distance w, as shown in Figure 157.10d(c) and specified in paragraph (c)(1) of this section.

(ii) For a vessel of less than 5,000 DWT: Not less than the distance h above the line of the mid-ship flat bottom, as shown in Figure 157.10d(c)(3)(ii) and specified in paragraph (c)(2) of this section. At levels greater than h above the line of the mid-ship flat bottom, not less than the distance w, as shown in Figure 157.10d(c)(3)(ii) and specified in paragraph (c)(1) of this section.

Figure 157.10d(c)(3)(ii) - Minimum Double Hull Dimensions Within the Turn of the Bilge of Vessels Under 5,000 DWT

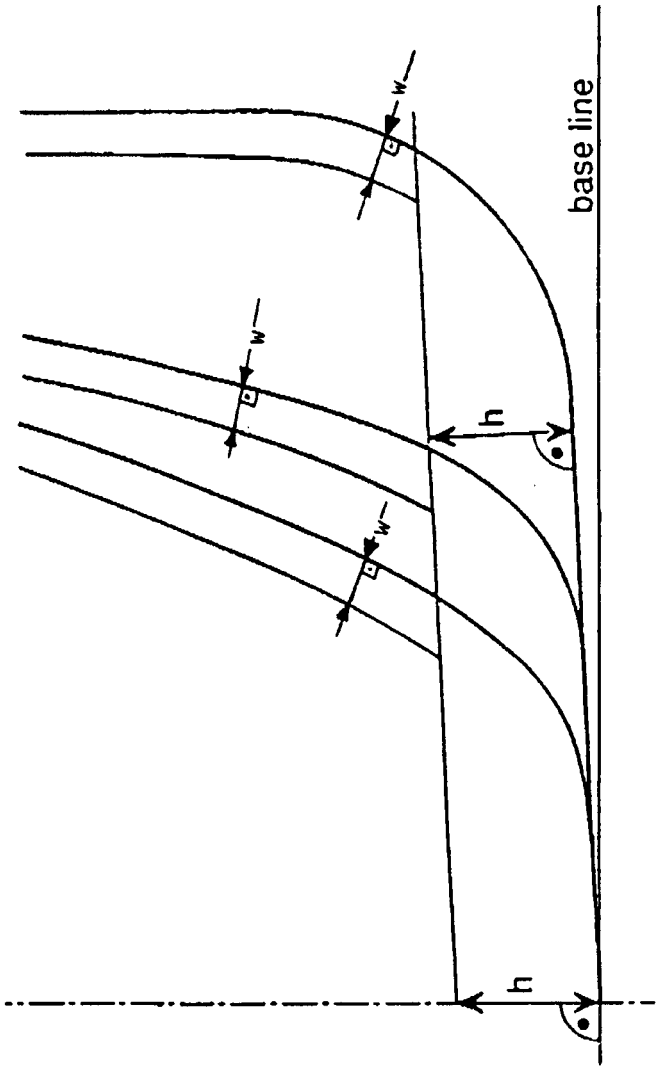

(4) For a vessel to which §157.10(b) applies that is built under a contract awarded after September 11, 1992.

(i) The aggregate volume of the double sides, double bottom, forepeak tanks, and afterpeak tanks must not be less than the capacity of segregated

ballast tanks required under § 157.10(b). Segregated ballast tanks that may be provided in addition to those required under § 157.10(b) may be located anywhere within the vessel.

(ii) Double side and double bottom tanks used to meet the requirements of § 157.10(b) must be located as uniformly as practicable along the cargo tank length. Large inboard extensions of individual double side and double bottom tanks, which result in a reduction of overall side or bottom protection, must be avoided.

(d) A vessel of less than 10,000 DWT that is constructed and certificated for service exclusively on inland or limited short protected coastwise routes must be fitted with double sides and a double bottom as follows:

(1) A minimum of 61 cm. (2 ft.) from the inboard side of the side shell plate, extending the full depth of the side or from the main deck to the top of the double bottom, measured at right angles to the side shell; and

(2) A minimum of 61 cm. (2 ft.) from the top of the bottom shell plating, along the full breadth of the vessel's bottom, measured at right angles to the bottom shell.

(3) For a vessel to which paragraph (a)(4) of this section applies, the width of the double sides and the depth of the double bottom may be 38 cm. (15 in.), in lieu of the dimensions specified in paragraphs (d)(1) and (d)(2) of this section, provided that the double side and double bottom tanks were fitted under a construction or conversion contract awarded prior to June 30, 1990.

(4) For a vessel built under a contract awarded after September 11, 1992, a minimum 46 cm. (18 in.) clearance for passage between framing must be maintained throughout the double sides and double bottom.

(e) Except as provided in paragraph (e)(3) of this section, a vessel must not carry any oil in any tank extending forward of:

(1) The collision bulkhead; or

(2) In the absence of a collision bulkhead, the transverse plane perpendicular to the centerline through a point located:

(i) The lesser of 10 meters (32.8 ft.) or 5 percent of the vessel length, but in no case less than 1 meter (39 in.), aft of the forward perpendicular;

(ii) On a vessel of less than 10,000 DWT tons that is constructed and certificated for service exclusively on inland or limited short protected coastwise routes, the lesser of 7.62 meters (25 ft.) or 5 percent of the vessel length, but in no case less than 61 cm. (2 ft.), aft of the headlog or stem at the freeboard deck; or

(iii) On each vessel which operates exclusively as a box or trail barge, 61 cm. (2 ft.) aft of the headlog.

(3) This paragraph does not apply to independent fuel oil tanks that must be located on or above the main deck within the areas described in paragraphs (e)(1) and (e)(2) of this section to serve adjacent deck equipment that cannot be located further aft. Such tanks must be as small and as far aft as is practicable.

(f) On each vessel, the cargo tank length must not extend aft to any point closer to the stern than the distance equal to the required width of the double side, as prescribed in § 157.10d(c)(1) or § 157.10d(d)(1).

[CGD 90–051, 57 FR 36239, Aug. 12, 1992]

§ 157.11 Pumping, piping and discharge arrangements.

(a) Each tank vessel must have a fixed piping system for transferring cargo residues and other oily mixtures from cargo tanks to slop tanks and for discharging oily mixtures to the sea and to reception facilities. On a vessel that has two or more independent piping arrangements, the arrangements collectively form the fixed piping system required by this paragraph.

(b) Each fixed piping system required by paragraph (a) of this section must have:

(1) At least two manifolds on the weather deck for transferring oily mixtures to reception facilities, one of which is on the port side of the vessel and one of which is on the starboard side; and

(2) Except as provided in paragraph (c) of this section, at least one discharge point that:

(i) Is used for discharges to the sea;

(ii) Is on a port or starboard weather deck or on the vessel's side above the

waterline of its deepest ballast condition; and

(iii) Has an automatic stop valve that is actuated by a cargo monitor signal, except that manual valves may be provided on new vessels of less than 4,000 tons deadweight and on existing vessels.

(c) An above waterline discharge point is not required on an existing vessel if its fixed piping system meets Paragraphs 3 and 4 of Appendix E of this part.

(d) Each tank vessel under §157.09, §157.10a, or §157.10b that carries crude oil must have:

(1) Equipment that drains each cargo pump and oil piping line of oil residue;

(2) Oil piping lines for the draining of oil residue from cargo pumps and other oil piping lines to a cargo tank or a slop tank; and

(3) An oil piping line that meets paragraph (f) of this section and is connected to the cargo discharge piping on the outboard side of the manifold valves for the draining of oil residue from cargo pumps and other oil piping lines to a receptacle on the shore.

(e) Each tank vessel under §157.10 must have:

(1) Oil piping lines that are designed and installed to minimize oil retention in those lines;

(2) Equipment that drains each cargo pump and oil piping line of oil residue;

(3) Oil piping lines for the draining of oil residue from cargo pumps and other oil piping lines to a cargo tank or slop tank; and

(4) An oil piping line that meets paragraph (f) of this section and is connected to the cargo discharge piping on the outboard side of the manifold valves for the draining of oil residue from cargo pumps and other oil piping lines to a receptacle on the shore.

(f) Each oil piping line under paragraph (d)(3) or (e)(4) of this section must have a cross-sectional area of 10 percent or less of the cross-sectional area of the main cargo discharge piping line, except if the oil piping line under paragraph (d)(3) of this section is installed before January 1, 1980, that piping line may have a cross-sectional area of 25 percent or less of the cross-sectional area of the main cargo discharge piping line.

(g) Each tank vessel to which §157.10d applies that is built under a contract awarded after September 11, 1992 must be arranged so that:

(1) Except for short lengths of completely welded (or equivalent) piping,

(i) Ballast piping and other piping to ballast tanks, such as sounding and vent piping, do not pass through cargo tanks, and

(ii) Cargo piping and other piping to cargo tanks do not pass through ballast tanks;

(2) Suction wells in cargo tanks that protrude into the double bottom are as small as practicable and extend no closer to the bottom shell plating than 0.5*h*, as specified in §157.10d(c)(2) or §157.10d(d)(2), as applicable; and

(3) On a vessel that is constructed and certificated for service exclusively on inland, Great Lakes, or limited short protected coastwise routes, any oil piping that is located within double hull spaces must be placed as far from the outer shell as is practicable and must be fitted with valves at the point of connection to the tank served, to prevent oil outflow in the event of damage to the piping. Such valves must be closed whenever the vessel is underway with any oil in tanks served by the associated piping, except as necessary during transfer operations.

NOTE: Piping location requirements for an oceangoing vessel are in §157.19(d). Related operating requirements are in §157.45.

[CGD 74–32, 40 FR 48283, Oct. 14, 1975, as amended by CGD 80–78, 45 FR 43704, June 30, 1980; CGD 77–058b, 45 FR 43708, June 30, 1980; CGD 79–152, 45 FR 82250, Dec. 15, 1980; CGD 76–088b, 48 FR 45720, Oct. 6, 1983; CGD 90–051, 57 FR 36244, Aug. 12, 1992]

§157.12 Cargo monitor and control system.

(a) Each vessel must have, for each type of cargo oil that it carries, at least one cargo monitor that is designed for use with that oil.

(b) Each monitor installed on a U.S. vessel must be approved under 46 CFR 162.050. Each monitor installed on a foreign vessel must be approved:

(1) Under 46 CFR 162.050; or

(2) As meeting IMO Resolution A.393(X) by a country that has ratified the MARPOL Protocol.

(c) Each monitor must be installed in accordance with Paragraphs 4, 5, and 6

of Appendix F to this part and be fitted with the control system prescribed by paragraphs 6.1.4.2 through 6.1.4.5.5 of that appendix.

[CGD 76–088b, 48 FR 45720, Oct. 6, 1983, as amended by USCG–1998–3799, 63 FR 35531, June 30, 1998]

§ 157.13 Designated observation area.

Each new vessel must have a designated observation area on the weather deck or above that is:

(a) Located where the effluent from each discharge point and manifold described in §157.11 can be visually observed; and

(b) Equipped with:

(1) A means to directly stop the discharge of effluent into the sea; or

(2) A positive communication system, such as a telephone or a radio, between the observation area and the discharge control position.

[CGD 74–32, 40 FR 48283, Oct. 14, 1975, as amended by CGD 76–088b, 48 FR 45720, Oct. 6, 1983]

§ 157.15 Slop tanks in tank vessels.

(a) *Number.* A tank vessel must have the following number of slop tanks that comply with the requirements of this section:

(1) A new vessel of less than 70,000 tons DWT and an existing vessel must have at least one slop tank.

(2) A new vessel of 70,000 tons DWT or more must have at least two slop tanks.

(b) *Capacity.* Slop tanks must have the total capacity to retain slops from tank washings, oil residues, and dirty ballast residues of three percent or more of the oil carrying capacity, except two percent capacity is allowed if there are:

(1) Segregated ballast tanks that meet the requirements in § 157.09, § 157.10, § 157.10a, or § 157.10b; or

(2) No eductors arrangements that use water in addition to the washing water.

(c) *Design.* A slop tank required in this section:

(1) Must minimize turbulence, entrainment of oil, and the creation of an emulsion by the use of separate inlet and outlet connections; and

(2) May carry bulk oil when not being used as a slop tank.

[CGD 74–32, 40 FR 48283, Oct. 14, 1975]

EDITORIAL NOTE: For FEDERAL REGISTER citations affecting § 157.15, see the List of CFR Sections Affected in the Finding Aids section of this volume.

§ 157.17 Oily residue tank.

(a) A tank vessel of 400 gross tons or more must have a tank that receives and holds oily residue resulting from purification of fuel and lubricating oil and from oil leakages in machinery spaces.

(b) Each oily residue tank required in paragraph (a) of this section must have an adequate capacity that is determined by the:

(1) Type of machinery installed on the vessel; and

(2) Maximum fuel oil capacity.

(c) Each oily residue tank on a new vessel must be designed to facilitate:

(1) Cleaning; and

(2) Discharging to a reception facility.

[CGD 74–32, 40 FR 48283, Oct. 14, 1975, as amended by CGD 80–78, 45 FR 43704, June 30, 1980]

§ 157.19 Cargo tank arrangement and size.

(a) This section applies to:

(1) A U.S. or foreign vessel that is delivered after January 1, 1977;

(2) A U.S. vessel that is delivered before January 1, 1977, for which the building contract is awarded after January 1, 1972, or, if there is no building contract, the keel is laid or the vessel is at a similar stage of construction after June 30, 1972; and

(3) A foreign vessel that is delivered before January 1, 1977, for which the building contract is awarded after January 1, 1974, or, if there is no building contract, the keel is laid or the vessel is at a similar stage of construction after June 30, 1974.

(b) As determined in accordance with the procedures contained in Appendix A of this part, each cargo tank must be of such size and arrangement that:

(1) The hypothetical outflow for side damage (O_c) or for bottom damage (O_s) anywhere within the length of the vessel must not exceed O_A (30,000 cubic meters or $(400)\times(\sqrt[3]{\text{DWT}})$ whichever is

greater, limited to a maximum of 40,000 cubic meters);

(2) The volume of each wing tank and center tank is less than the allowable volume of a wing tank (VOL_W) and the allowable volume of a center tank (VOL_C) respectively; and

(3) The length of a tank is less than the allowable length of a tank (l_a).

(c) If a cargo transfer system interconnects two or more cargo tanks, the system must have valves to segregate the tanks from each other.

(d) If a line of piping that runs through a cargo tank in a position less than t_c from the vessel's side or less than v_s from the vessel's bottom as defined in Appendix A of this part, has a branch, that branch must have a stop valve:

(1) Within each cargo tank into which the branch opens; or

(2) Outside each tank into which the branch opens in a location that is immediately adjacent to the point at which the branch enters the tank.

(e) If piping that serves suction wells is installed within a double bottom, that piping must be:

(1) Fitted with valves located at the point of connection to the tank served to prevent oil outflow in the event of damage to the piping; and

(2) Designed to be installed as high from the bottom shell as possible.

[CGD 74–32, 40 FR 48283, Oct. 14, 1975, as amended by CGD 75–240, 41 FR 54180, Dec. 13, 1976; CGD 76–088b, 48 FR 45720, Oct. 6, 1983]

CROSS REFERENCE: See 33 CFR 151.50 (39 FR 30125) for an interpretative rule concerning tank arrangement and size limitations applicable to seagoing tank barges.

§157.21 Subdivision and stability.

A new vessel that is a U.S. vessel must meet the following subdivision and damage stability criteria after assuming side and bottom damages, as defined in Appendix B of this Part. A U.S. vessel that meets the requirements in this section is considered by the Coast Guard as meeting 46 CFR 42.20–5.

(a) The final waterline, taking into account sinkage, heel, and trim, must be below the lower edge of an opening through which progressive flooding may take place, such as an air pipe, or any opening that is closed by means of a weathertight door or hatch cover. This opening does not include an opening closed by a:

(1) Watertight manhole cover;

(2) Flush scuttle;

(3) Small watertight cargo tank hatch cover that maintains the high integrity of the deck;

(4) Remotely operated watertight sliding door; or

(5) Side scuttle of the non-opening type.

(b) In the final stage of flooding, the angle of heel due to unsymmetrical flooding must not exceed 25 degrees, except that this angle may be increased to 30 degrees if no deck edge immersion occurs.

(c) For acceptable stability in the final stage of flooding, the righting lever curve must have a range of at least 20 degrees beyond the position of equilibrium in association with a maximum residual righting lever of at least 0.1 meter. For the calculations required in this section, weathertight openings or openings fitted with automatic closures (e.g., a vent fitted with a ball check valve), need not be considered as points of downflooding within the range of residual stability, but other openings must be accounted for in the calculation.

[CGD 74–32, 40 FR 48283, Oct. 14, 1975, as amended by CGD 75–240, 41 FR 54180, Dec. 13, 1976]

§157.23 Cargo and ballast system information.

(a) Each tank vessel to which this part applies must have an instruction manual that describes the automatic and manual operation of the cargo and ballast system in the vessel.

(b) The format and information contained in the instruction manual required in paragraph (a) of this section must be similar to the manual entitled ''Clean Seas Guide for Oil Tankers'' which can be obtained from the International Chamber of Shipping, 30–32 St. Mary Axe, London, England, EC3A 8ET.

§157.24 Submission of calculations, plans, and specifications.

The owner, builder or designer of a new vessel to which this part applies shall submit the documentation specified in this section to the Coast Guard

before that vessel enters the navigable waters of the United States. The owner, builder, or designer of a vessel that must comply with § 157.10d shall submit the documentation specified in this section to the Coast Guard before that vessel enters the navigable waters of the United States or the U.S. Exclusive Economic Zone.

(a) Calculations to substantiate compliance with the tank arrangement and size requirements under § 157.19, or a letter from the government of the vessel's flag state that certifies compliance with:

(1) Section 157.19; or

(2) Regulations 24 of Annex I of the International Convention for the Prevention of Pollution from Ships, 1973.

(b) Except for a new vessel that is a foreign vessel, calculations to substantiate compliance with subdivisions and damage stability requirements under § 157.21.

(c) Plans and calculations to substantiate compliance with the applicable segregated ballast and double hull requirements in §§ 157.09, 157.10, 157.10a, 157.10b, or 157.10d, or certification from the government of the vessel's flag state that the vessel complies with the segregated ballast and double hull requirements in:

(1) Sections 157.09, 157.10, 157.10a, 157.10b, or 157.10d, as applicable; or

(2) For a vessel to which § 157.10d does not apply, Regulations 13 and 13E of the MARPOL Protocol.

(d) Plans and specifications for the vessel that include:

(1) Design characteristics;

(2) A lines plan;

(3) Curves of form (hydrostatic curves) or hydrostatic tables;

(4) A general arrangement plan of each deck and level;

(5) Inboard and outboard profile plans showing oiltight and watertight bulkheads;

(6) A midship section plan;

(7) A capacity plan showing the capacity and the vertical and longitudinal centers of gravity of each cargo space, tank, and similar space;

(8) Tank sounding tables or tank capacity tables;

(9) Draft mark locations;

(10) Detailed plans of watertight doors; and

(11) Detailed plans of vents.

[CGD 75–240, 41 FR 54180, Dec. 13, 1976, as amended by CGD 77–058b, 45 FR 43708, June 30, 1980; CGD 79–152, 45 FR 82250, Dec. 15, 1980; CGD 90–051, 57 FR 36244, Aug. 12, 1992]

§ 157.24a Submission of calculations, plans, and specifications for existing vessels installing segregated ballast tanks.

(a) Before modifications are made to a U.S. tank vessel to meet § 157.10a(a)(1), § 157.10a(c)(1), § 157.10c(b)(1), or § 157.10c(c)(1), the vessel's owner or operator must submit the following to the Officer in Charge, Marine Inspection, of the zone where the modification will be made or to the appropriate Coast Guard technical office listed in 157.100(b):

(1) A drawing or diagram of the pumping and piping system for the segregated ballast tanks.

(2) A drawing of the segregated ballast tank arrangement.

(3) Documentation, calculations, or revised stability information to show that the vessel, with the addition of the segregated ballast tanks, meets the stability standards for load line assignment in 46 CFR Part 42.

(4) Documentation, calculations, or a revised loading manual to show that the vessel, with the addition of the segregated ballast tanks, meets the structural standards in 46 CFR Part 32.

(5) Plans and calculations to show that the vessel, as modified, complies with the segregated ballast capacity and distribution requirements in § 157.10a.

(b) Before each foreign vessel under § 157.10a(a)(1) or § 157.10a(c)(1) enters the navigable waters of the United States, the owner or operator of that vessel must—

(1) Submit to the Commandant (G–MOC), U.S. Coast Guard, Washington, D.C. 20593–0001—

(i) A letter from the authority that assigns the load line to the vessel finding that the location of the segregated ballast tanks is acceptable; and

(ii) Plans and calculations to substantiate compliance with the segregated ballast capacity requirements in § 157.09(b); or

(2) Submit to the Officer in Charge, Marine Inspection, of the zone in which

the first U.S. port call is made, a letter or document from the government of vessel's flag state certifying that the vessel complies with the segregated ballast capacity requirements in §157.09(b) or Regulation 13 of the MARPOL Protocol.

(c) On January 1, 1986, or 15 years after the date it was delivered to the original owner, or 15 years after the completion of a major conversion, whichever is later, before that vessel enters the navigable waters of the United States, the owner or operator of an existing foreign vessel under §157.10c(b)(1) or §157.10c(c)(1) must—

(1) Submit to the Commandant (G–MOC), U.S. Coast Guard, Washington, D.C. 20593–0001—

(i) A letter from the authority that assigns the load line to the vessel finding that the location of the segregated ballast tanks is acceptable; and

(ii) Plans and calculations to substantiate compliance with the applicable segregated ballast capacity requirements in §157.09(b) or §157.10c(d); or

(2) Submit to the Officer in Charge, Marine Inspection, of the zone in which the first U.S. port call is made a letter from an authorized CS or the government of the vessel's flag state certifying that the vessel complies with the segregated ballast capacity requirements in §157.09(b) or §157.10c(d).

(Reporting and recordkeeping requirements approved by the Office of Management and Budget under control number 2115–0520)

[CGD 82–28, 50 FR 11626 and 11630, Mar. 22, 1985, as amended by CGD 88–052, 53 FR 25122, July 1, 1988; CGD 96–026, 61 FR 33668, June 28, 1996]

Subpart C—Vessel Operation

§157.25 Applicability of subpart C.

(a) This subpart applies to each vessel to which this part applies of 150 gross tons or more, unless otherwise indicated, that carries crude oil or products in bulk as cargo. This subpart does not apply to a foreign vessel which remains beyond the navigable waters of the United States and does not transfer oil cargo at a port or place subject to the jurisdiction of the United States.

(b) Sections 157.29, 157.31, 157.37(a)(5), 157.37(a)(6) and 157.43 apply to foreign vessels when they discharge into the navigable waters of the United States.

(c) Sections 157.35, 157.37, except paragraphs (a)(5) and (a)(6), 157.39, 157.45, and 157.47 do not apply to foreign vessels.

[CGD 76–088b, 48 FR 45720, Oct. 6, 1983, as amended by CGD 90–051, 57 FR 36244, Aug. 12, 1992]

§157.26 Operation of a tank vessel in violation of regulations.

No person may cause or authorize the operation of a tank vessel in violation of the regulations in this part.

[CGD 77–058b, 45 FR 43708, June 30, 1980]

§157.27 Discharges: Tank vessels carrying oil exclusively on rivers, lakes, bays, sounds, and the Great Lakes, and seagoing tank vessels of less than 150 gross tons.

Unless a tank vessel carrying oil exclusively on rivers, lakes, bays, sounds, and the Great Lakes, or a seagoing tank vessel of less than 150 gross tons discharges clean ballast or segregated ballast, the vessel must:

(a) Retain on board any oily mixture; or

(b) Transfer an oily mixture to a reception facility.

§157.28 Discharges from tank barges exempted from certain design requirements.

The person in charge of a tank barge exempted under §157.08(g) from the requirements in §§157.11, 157.13, 157.15, and 157.23 shall ensure that while the barge is proceeding en route:

(a) Cargo tanks are not ballasted or washed; and

(b) Oil or oily mixtures are not discharged.

[CGD 74–32, 40 FR 48283, Oct. 14, 1975, as amended by CGD 76–088b, 48 FR 45721, Oct. 6, 1983; CGD 90–051, 57 FR 36244, Aug. 12, 1992]

§157.29 Discharges: Seagoing tank vessels of 150 gross tons or more.

Unless a seagoing tank vessel of 150 gross tons or more discharges an oily mixture in compliance with the requirements in §157.37, §157.39, or §157.43, the vessel must:

(a) Retain the mixture; or

(b) Transfer the mixture to a reception facility.

§ 157.31 Discharges: Chemical additives.

No person may use a chemical additive to circumvent the discharge requirements in §§ 157.27, 157.29, 157.37, 157.39, and 157.43.

§ 157.33 Water ballast in oil fuel tanks.

A new vessel may not carry ballast water in an oil fuel tank.

§ 157.35 Ballast added to cargo tanks.

The master of a tank vessel with segregated ballast tanks or dedicated clean ballast tanks under § 157.09, § 157.10, § 157.10a(a)(1), § 157.10a(b), § 157.10a(c), § 157.10b(a), § 157.10c(b)(1), or § 157.10c(c) shall ensure that ballast water is carried in a cargo tank only if—

(a) The vessel encounters abnormally severe weather conditions;

(b) More ballast water than can be carried in segregated ballast tanks or dedicated clean ballast tanks is necessary for the safety of the vessel;

(c) The ballast water is processed and discharged in compliance with § 157.37; and

(d) On a new vessel under § 157.10 that carries crude oil, the ballast water is only carried in a cargo tank that is crude oil washed in accordance with Subpart D of this part during or after the most recent discharge of crude oil from that tank.

[CGD 77–058b, 45 FR 43708, June 30, 1980, as amended by CGD 82–28, 50 FR 11626, Mar. 22, 1985]

§ 157.37 Discharge of cargo residue.

(a) A tank vessel may not discharge an oily mixture into the sea from a cargo tank, slop tank, or cargo pump room bilge unless the vessel:

(1) Is more than 50 nautical miles from the nearest land;

(2) Is proceeding en route;

(3) Is discharging at an instantaneous rate of oil content not exceeding 60 liters per nautical mile;

(4) Is an existing vessel and the total quantity of oil discharged into the sea does not exceed 1/15,000 of the total quantity of the cargo that the discharge formed a part, or is a new vessel and the total quantity of oil discharged into the sea does not exceed 1/30,000 of the total quantity of the cargo that the discharge formed a part;

(5) Discharges:

(i) Through the above waterline discharge point described in § 157.11(b)(2);

(ii) In accordance with Paragraph 5 of Appendix E to this part, if the vessel is an existing vessel with a Part Flow System meeting that appendix; or

(iii) Below the waterline in accordance with paragraph (e) of this section;

(6) Has in operation a cargo monitor and control system required by § 157.12 that is designed for use with the oily mixture being discharged, except that the system may be operated manually if:

(i) The automatic system fails during a ballast voyage;

(ii) The failure is recorded in the Oil Record Book;

(iii) The master ensures that the discharge is constantly monitored visually and promptly terminated when oil is detected in the discharge; and

(iv) The system is operated manually only until the ballast voyage is completed; and

(7) Is outside the ''Special Areas'' defined in Regulation 1 (10) of Annex I to the MARPOL Protocol.

(b) A seagoing tank vessel of 150 gross tons or more that carries asphalt or other products whose physical properties inhibit effective product/water separation and monitoring must transfer all residues and tank washings from such cargoes to a reception facility.

(c) Each cargo monitor must be maintained and operated in accordance with its instructions manual.

(d) All discharge data recorded by a cargo monitor must be retained for at least three years. The data for the most recent year must be retained on board the vessel.

(e) Ballast containing an oily mixture may be discharged below the waterline at sea by gravity if:

(1) The ballast is not from a slop tank;

(2) Examination with an oil-water interface detector shows that oil-water separation has taken place; and

(3) The oil layer is high enough in the tank so that it will not be discharged.

(The information collection requirement contained in paragraph (d) of this section was approved by the Office of Management and Budget under OMB control number 2115–0518)

[CGD 74–32, 40 FR 48283, Oct. 14, 1975, as amended by CGD 76–088b, 48 FR 45721, Oct. 6, 1983]

§157.39 Machinery space bilges.

(a) A tank vessel may discharge an oily mixture from a machinery space bilge that is combined with an oil cargo mixture if the vessel discharges in compliance with §157.37.

(b) A tank vessel may discharge an oily mixture from a machinery space bilge that is not combined with an oil cargo mixture if the vessel:

(1) Is more than 12 nautical miles from the nearest land;

(2) Is proceeding en route;

(3) Is discharging an effluent with an oil content of less than 100 parts per million; and

(4) Has in operation an oil discharge monitoring and control system approved by the Coast Guard (specification regulation to be proposed) and oil water separating equipment approved by the Coast Guard (specification regulation to be proposed).

§157.41 Emergencies.

Sections 157.27, 157.29, 157.37, and 157.39 do not apply to a tank vessel that discharges into the sea oil or oily mixtures:

(a) For the purpose of securing the safety of the vessel or for saving life at sea; or

(b) As a result of damage to the vessel or its equipment if:

(1) Reasonable precautions are taken after the occurrence of the damage or discovery of the discharge for the purpose of preventing or minimizing the discharge; and

(2) The owner, master or person in charge did not intend to cause damage, or did not act recklessly and with knowledge that damage of the environment would probably result.

§157.43 Discharges of clean and segregated ballast: Seagoing tank vessels of 150 gross tons or more.

(a) Clean ballast may not be discharged overboard unless the discharge is verified as clean ballast through use of an approved cargo monitor or, if discharged before the required cargo monitor installation date, by visual examination of the ballast contents immediately before discharge. This paragraph applies to discharges of clean ballast:

(1) From dedicated clean ballast tanks; and

(2) Into the navigable waters of the United States from any other tank.

(b) Segregated ballast may not be discharged overboard unless a visual examination, or a test of the ballast contents with an oil/water interface detector, immediately before the discharge shows that there is no oil mixture in the ballast. Use of a cargo monitor is not required. This paragraph applies to discharges of segregated ballast:

(1) Into the navigable waters of the United States; and

(2) Below the waterline at sea from an existing vessel that does not have an above the waterline discharge point for segregated ballast.

(c) All discharges of clean ballast and segregated ballast must be through an above waterline discharge point described in §157.11(b)(2), except that:

(1) A vessel may discharge clean ballast and segregated ballast below the waterline when in port or at an offshore terminal.

(2) A vessel may discharge clean ballast and segregated ballast at sea by gravity below the waterline.

(3) An existing vessel that does not have above waterline discharge points for dedicated clean ballast tanks may discharge clean ballast from those tanks below the waterline at sea.

(4) An existing vessel that does not have above waterline discharge points for segregated ballast tanks may discharge segregated ballast below the waterline at sea.

(d) This section applies only to seagoing tank vessels of 150 gross tons or more.

[CGD 76–088b, 48 FR 45721, Oct. 6, 1983; 48 FR 46985, Oct. 17, 1983]

§ 157.45 Valves in cargo or ballast piping system.

When a tank vessel is at sea and the tanks contain oil, valves and closing devices in the cargo or ballast piping system or in the transfer system must be kept closed except they may be opened for cargo or ballast transfer to trim the vessel.

§ 157.47 Information for master.

A master or person in charge of a new vessel shall operate the vessel in accordance with the information required in 46 CFR 31.10–30(d) that includes the following:

(a) Stability information.

(b) Damage stability information determined in accordance with the criteria contained in Appendix B of this part.

(c) Loading and distribution of cargo information determined in compliance with the damage stability criteria required in Appendix B of this part.

[CGD 74–32, 40 FR 48283, Oct. 14, 1976, as amended by CGD 75–240, 41 FR 54180, Dec. 13, 1976]

§ 157.49 Instruction manual.

The master of a tank vessel shall ensure that the instruction manual under § 157.23 is available and used when the cargo or ballast systems are operated.

Subpart D—Crude Oil Washing (COW) System on Tank Vessels

SOURCE: CGD 77–058b, 45 FR 43709, June 30, 1980, unless otherwise noted.

GENERAL

§ 157.100 Plans for U.S. tank vessels: Submission.

(a) Before each U.S. tank vessel having a COW system under § 157.10(e), § 157.10a(a)(2), or § 157.10c(b)(2) is inspected under § 157.140, the owner or operator of that vessel must submit to the Coast Guard plans that include—

(1) A drawing or diagram of the COW pumping and piping system that meets 46 CFR 56.01–10(d);

(2) The design of each COW machine;

(3) The arrangement, location, and installation of the COW machines; and

(4) Except as allowed in § 157.104, the projected direct impingement pattern of crude oil from the nozzles of the COW machines on the surfaces of each tank, showing the surface areas not reached by direct impingement.

(b) Plans under paragraph (a) of this section must be submitted to the Officer in Charge, Marine Inspection, of the zone in which the COW system is installed or to the Commanding Officer, U.S. Coast Guard Marine Safety Center, 400 7th Street, SW., Washington, DC 20590–0001.

(Reporting and recordkeeping requirements approved by the Office of Management and Budget under control number 2115–0520)

[CGD 77–058b, 45 FR 43709, June 30, 1980, as amended by CGD 82–28, 50 FR 11626 and 11630, Mar. 22, 1985; CDG 85–048a, 51 FR 15481, Apr. 24, 1986; USCG–1998–3799, 63 FR 35531, June 30, 1998]

§ 157.102 Plans for foreign tank vessels: Submission.

If the owner or operator of a foreign tank vessel having a COW system under § 157.10(e), § 157.10a(a)(2), or § 157.10c(b)(2), desires the letter from the Coast Guard under § 157.106 accepting the plans submitted under this paragraph, the owner or operator must submit to the Commandant (G–MOC), U.S. Coast Guard, Washington, DC 20593–0001, plans that include—

(a) A drawing or diagram of the COW pumping and piping system that meets 46 CFR 56.01–10(d);

(b) The design of each COW machine;

(c) The arrangement, location, and installation of the COW machines; and

(d) Except as allowed in § 157.104, the projected direct impingement pattern of crude oil from the nozzles of the COW machines on the surfaces of each tank, showing the surface areas not reached by direct impingement.

(Reporting and recordkeeping requirements approved by the Office of Management and Budget under control number 2115–0520)

[CGD 77–058b, 45 FR 43709, June 30, 1980, as amended by CGD 82–28, 50 FR 11627 and 11630, Mar. 22, 1985; CGD 88–052, 53 FR 25122, July 1, 1988; CGD 96–026, 61 FR 33668, June 28, 1996]

§ 157.104 Scale models.

If the pattern under § 157.100(a)(4) or § 157.102(d) cannot be shown on a plan, a scale model of each tank must be built

for Coast Guard inspection to simulate, by a pinpoint of light, the projected direct impingement pattern on the surfaces of the tank.

§ 157.106 Letter of acceptance.

The Coast Guard informs the submitter by letter that the plans submitted under § 157.100 or § 157.102 are accepted if:

(a) The plans submitted show that the COW system meets this subpart; or

(b) The plans submitted and the scale model under § 157.104 show that the COW system meets this subpart.

§ 157.108 Crude Oil Washing Operations and Equipment Manual for U.S. tank vessels: Submission.

Before each U.S. tank vessel having a COW system under § 157.10(e), § 157.10a(a)(2), or § 157.10c(b)(2) is inspected under § 157.140, the owner or operator of that vessel must submit two copies of a manual that meets § 157.138, to the Officer in Charge, Marine Inspection, of the zone in which the COW system is installed or to the appropriate Coast Guard field technical office listed in § 157.100(b).

(Reporting and recordkeeping requirements approved by the Office of Management and Budget under control number 2115–0520)

[CGD 82–28, 50 FR 11627 and 11630, Mar. 22, 1985]

§ 157.110 Crude Oil Washing Operations and Equipment Manual for foreign tank vessels: Submission.

If the owner or operator of a foreign tank vessel having a COW system under § 157.10(e), § 157.10a(a)(2), or § 157.10c(b)(2) desires a Coast Guard approved *Crude Oil Washing Operations and Equipment Manual* under § 157.112, the owner or operator must submit two copies of a manual that meets § 157.138 to the Commandant (G–MOC), U.S. Coast Guard, Washington, DC 20593–1000.

(Reporting and recordkeeping requirements approved by the Office of Management and Budget under control number 2115–0520)

[CGD 82–28, 50 FR 11627 and 11630, Mar. 22, 1985, as amended by CGD 88–052, 53 FR 25122, July 1, 1988; CGD 96–026, 61 FR 33668, June 28, 1996]

§ 157.112 Approved Crude Oil Washing Operations and Equipment Manual.

If the manuals submitted under § 157.108 or § 157.110 meet § 157.138, the Coast Guard approves the manuals and forwards one of the approved manuals to the submitter.

§ 157.114 Crude Oil Washing Operations and Equipment Manual: Not approved.

If the manuals submitted under § 157.108 or § 157.110 are not approved, the Coast Guard forwards a letter to the submitter with the reasons why the manuals were not approved.

§ 157.116 Required documents: U.S. tank vessels.

The owner, operator, and master of a U.S. tank vessel having a COW system under § 157.10(e), § 157.10a(a)(2), or § 157.10c(b)(2) shall ensure that the vessel does not engage in a voyage unless the vessel has on board the following:

(a) The *Crude Oil Washing Operations and Equipment Manual* that—

(1) Is approved under § 157.112; or

(2) Bears a certification by an authorized CS that the manual contains the information required under § 157.138.

(b) Evidence of acceptance of the tank vessel's COW system consisting of—

(1) A document from an authorized CS that certifies the vessel meets § 157.10c(b)(2) and each amending letter by the authorized CS approving changes in the design, equipment, or installation; or

(2) The letter of acceptance under § 157.106 and each amending letter issued under § 157.158(c).

(c) Evidence that the COW system passed the required inspections by—

(1) A document from an authorized CS that the vessel has passed the inspections under § 157.140; or

(2) The letter of acceptance under § 157.142 after passing the inspection under § 157.140.

(Reporting and recordkeeping requirements approved by the Office of Management and Budget under control number 2115–0520)

[CGD 82–28, 50 FR 11627 and 11630, Mar. 22, 1985]

§ 157.118 Required documents: Foreign tank vessels.

(a) The owner, operator, and master of a foreign tank vessel under § 157.10(e) or § 157.10a(a)(2) shall ensure that the vessel does not enter the navigable waters of the United States or transfer cargo at a port or place subject to the jurisdiction of the United States unless the vessel has on board—

(1) The *Crude Oil Washing Operations and Equipment Manual* that—

(i) Is approved under § 157.112; or

(ii) Meets the manual standards in Resolution 15 of the MARPOL Protocol and bears the approval of the government of the vessel's flag state; and

(2) Either—

(i) A document from the government of the vessel's flag state that certifies that the vessel complies with Resolution 15 of the MARPOL Protocol; or

(ii) The following letters issued by the Coast Guard:

(A) The letter of acceptance issued under § 157.106.

(B) The letter of acceptance issued under § 157.142.

(C) Each amending letter issued under § 157.158(c).

(b) On January 1, 1986, or 15 years after the date it was delivered to the original owner or 15 years after the completion of a major conversion, whichever is later, the owner, operator, and master of a foreign vessel having a COW system under § 157.10c(b)(2) shall ensure that the vessel does not enter the navigable waters of the United States or transfer cargo at a port or place subject to the jurisdiction of the United States unless the vessel has on board—

(1) The *Crude Oil Washing Operations and Equipment Manual* that—

(i) Is approved under § 157.112; or

(ii) Bears a certification by an authorized CS or the government of the vessel's flag state that the manual contains the information required under § 157.138;

(2) Evidence that the COW system passed the required inspections by—

(i) A document from an authorized CS or the government of the vessel's flag state certifying that the vessel passed the inspections under § 157.140; or

(ii) The letter of acceptance under § 157.142 after passing the inspection under § 157.140; and

(3) Either—

(i) A document from an authorized CS or the government of the vessel's flag state certifying that the vessel complies with the design, equipment and installation standards in §§ 157.122 through 157.136 and any amending letters approving changed COW system characteristics; or

(ii) The letter of acceptance under § 157.106 and any amending letters issued under § 157.158(c).

(Reporting and recordkeeping requirements approved by the Office of Management and Budget under control number 2115–0520)

[CGD 82–28, 50 FR 11627 and 11630, Mar. 22, 1985]

§ 157.120 Waiver of required documents.

The Coast Guard waives the requirement for the letter under § 157.116(b), if a U.S. tank vessel engages in a voyage, or under § 157.118(b)(2)(ii), if a foreign tank vessel enters the navigable waters of the United States or transfers cargo at a port or place subject to the jurisdiction of the United States, for the purpose of being inspected under § 157.140.

DESIGN, EQUIPMENT, AND INSTALLATION

§ 157.122 Piping, valves, and fittings.

(a) Except as allowed in paragraph (o) of this section, the piping, valves, and fittings of each COW system must:

(1) Meet 46 CFR Part 56; and

(2) Be of steel or an equivalent material accepted by the Commandant.

(b) The piping of each COW system must be permanently installed.

(c) The piping of each COW system must be separate from other piping systems on the vessel, except that the vessel's cargo piping may be a part of the COW piping if the cargo piping meets this section.

(d) The piping of each COW system must have overpressure relief valves or other means accepted by the Commandant to prevent overpressure in the piping of the COW system, unless the maximum allowable working pressure of that system is greater than the shut-

off head of each pump that meets §157.126(b).

(e) Each overpressure relief valve must discharge into the suction side of a pump that meets §157.126(b).

(f) The piping and equipment of a COW system may not be in machinery spaces.

(g) Each hydrant valve for water washing in the piping of a COW system must:

(1) Have adequate strength to meet 46 CFR Part 56 for the working pressure for which the system is designed; and

(2) Be capable of being blanked off.

(h) Each sensing instrument must have an isolating valve at its connection to the piping of the COW system, unless the opening to that connection is 0.055 inches (1.4 millimeters) or smaller.

(i) If the washing system for cargo tanks has a steam heater used when water washing, it must be located outside the engine room and must be capable of being isolated from the piping of the COW system by:

(1) At least two shut-off valves in the inlet piping and at least two shut-off valves in the outlet piping; or

(2) Blank flanges identifiable as being closed (e.g., spectacle flanges).

(j) If the COW system has a common piping system for oil washing and water washing, that piping system must be designed to drain the crude oil into a slop tank or a cargo tank.

(k) The piping of a COW system must be securely attached to the tank vessel's structure with pipe anchors.

(l) When COW machines are used as pipe anchors, there must be other means available for anchoring the piping if these machines are removed.

(m) There must be a means to allow movement of the COW system piping as a result of thermal expansion and flexing of the tank vessel.

(n) The supply piping attached to each deck mounted COW machine and each COW machine that is audio inspected under §157.155(a)(4)(ii) must have a shut-off valve.

(o) On combination carriers, piping of the COW system installed between each COW machine located in a cargo tank hatch cover and an adjacent location just outside the hatch coaming, may be flexible hose with flanged connections that is acceptable by the Commandant.

§157.124 COW tank washing machines.

(a) COW machines must be permanently mounted in each cargo tank.

(b) The COW machines in each tank must have sufficient nozzles with the proper diameter, working pressure, movement, and timing to allow the tank vessel to pass the inspections under §157.140.

(c) Each COW machine and its supply piping must be supported to withstand vibration and pressure surges.

(d) There must be one portable drive unit available on board the vessel for every three COW machines that use portable drive units during COW operations required by §157.160 before each ballast voyage.

(e) Except as allowed in paragraph (f) of this section, each cargo tank must have COW machines located to wash all horizontal and vertical areas of the tank by direct impingement, jet deflection, or splashing to allow the tank vessel to pass the inspections under §157.140. The following areas in each tank must not be shielded from direct impingement by large primary structural members or any other structural member determined to be equivalent to a large primary structural member by the Commandant when reviewing the plans submitted under §157.100 or §157.102:

(1) 90 percent or more of the total horizontal area of the:

(i) Tank bottom;

(ii) Upper surfaces of large primary structural members; and

(iii) Upper surfaces of any other structural member determined to be equivalent to a large primary structural member by the Commandant.

(2) 85 percent or more of the total vertical area of the tank sides and swash bulkheads.

(f) Each cargo tank on a vessel having a COW system under §157.10a(a)(2) or §157.10c(b)(2) with complicated internal structural members does not have to meet paragraph (e) of this section if the following areas of each cargo tank are washed by direct impingement and the tank vessel can pass the inspections under §157.140:

(1) 90 percent or more of the total horizontal area of all the:

(i) Tank bottoms;

(ii) Upper surfaces of large primary structural members; and

(iii) Upper surfaces of any other structural member determined to be equivalent to a large primary structural member by the Commandant.

(2) 85 percent or more of the total vertical area of all the tank sides and swash bulkheads.

(g) Each single nozzle COW machine that is mounted to the deck must have a means located outside of the cargo tank that indicates the arc and rotation of the movement of the COW machine during COW operations.

(h) Each multi-nozzle COW machine that is mounted to the deck must have a means located outside of the cargo tank that indicates the movement of the COW machine during COW operations.

(i) Each COW machine mounted to or close to the bottom of a tank without a means located outside of the cargo tank that indicates movement of the machine must not be programmable.

NOTES: 1. In the calculations to meet § 157.124 (e) or (f), areas that are shielded from direct impingement by structural members other than large primary structural members or swash bulkheads can be calculated as areas being washed by direct impingement.

2. One or more types of COW machines could be used to meet § 157.124 (e) or (f).

[CGD 77–058b, 45 FR 43709, June 30, 1980, as amended by CGD 82–28, 50 FR 11627, Mar. 22, 1985]

§ 157.126 Pumps.

(a) Crude oil must be supplied to the COW machines by COW system pumps or cargo pumps.

(b) The pumps under paragraph (a) of this section must be designed and arranged with sufficient capacity to meet the following:

(1) A sufficient pressure and flow is supplied to allow the simultaneous operation of those COW machines designed to operate simultaneously.

(2) If an eductor is used for tank stripping, enough driving fluid is provided by the pumps to allow the eductor to meet § 157.128(a).

(c) There must be means on the tank vessel to maintain the pressure under paragraph (b) of this section when shore terminal back pressure is less than the pressure under paragraph (b) of this section.

(d) The COW system must have two or more pumps that are capable of supplying oil to the COW machines.

(e) The COW system must be designed to meet the requirements of this subpart with any one pump not operating.

§ 157.128 Stripping system.

(a) Each tank vessel having a COW system under § 157.10(e), § 157.10a(a)(2), or § 157.10c(b)(2) must have a stripping system that is designed to remove crude oil from—

(1) Each cargo tank at 1.25 times the rate at which all the COW machines that are designed to simultaneously wash the bottom of the tank, are operating; and

(2) The bottom of each tank to allow the tank vessel to pass the inspection under § 157.140(a)(2).

(b) Each cargo tank must be designed to allow the level of crude oil in the tank to be determined by:

(1) Hand dipping at the aftermost portion of the tank and three other locations; or

(2) Any other means accepted by the Commandant.

(c) Each stripping system must have at least one of the following devices for stripping oil from each cargo tank:

(1) A positive displacement pump.

(2) A self-priming centrifugal pump.

(3) An eductor

(4) Any other device accepted by the Commandant.

(d) There must be a means in the stripping system piping between the device under paragraph (c) of this section and each cargo tank to isolate each tank from the device.

(e) If the stripping system has a positive displacement pump or a self-priming centrifugal pump, the stripping system must have the following:

(1) In the stripping system piping:

(i) A pressure gauge at the inlet connection to the pump; and

(ii) A pressure gauge at the discharge connection to the pump.

(2) At least one of the following monitoring devices to indicate operation of the pump.

(i) Flow indicator.

(ii) Stroke counter.

(iii) Revolution counter.

(f) If the stripping system has an eductor, the stripping system must have:

(1) A pressure gauge at each driving fluid intake and at each discharge; and

(2) A pressure/vacuum gauge at each suction intake.

(g) The equipment required under paragraphs (e) and (f) of this section must have indicating devices in the cargo control room or another location that is accepted by the Commandant.

[CGD 77–058b, 45 FR 43709, June 30, 1980, as amended by CGD 82–28, 50 FR 11627, Mar. 22, 1985]

§157.130 Crude oil washing with more than one grade of crude oil.

If a tank vessel having a COW system under §§157.10(e), 157.10a(a)(2), or 157.10c(b)(2) carries more than one grade of crude oil, the COW system must be capable of washing the cargo tanks with the grades of crude oil that the vessel carries.

[CGD 82–28, 50 FR 11627, Mar. 22, 1985]

§157.132 Cargo tanks: Hydrocarbon vapor emissions.

Each tank vessel having a COW system under §157.10a(a)(2) or §157.10c(b)(2) without sufficient segregated ballast tanks or dedicated clean ballast tanks to allow the vessel to depart from any port in the United States without ballasting cargo tanks must have—

(a) A means to discharge hydrocarbon vapors from each cargo tank that is ballasted to a cargo tank that is discharging crude oil; or

(b) Any other means accepted by the Commandant that prevents hydrocarbon vapor emissions when the cargo tanks are ballasted in port.

[CGD 77–058b, 45 FR 43709, June 30, 1980, as amended by CGD 82–28, 50 FR 11628, Mar. 22, 1985]

§157.134 Cargo tank drainage.

Each cargo tank must be designed for longitudinal and transverse drainage of crude oil to allow the tank vessel to pass the inspections under §157.140.

§157.136 Two-way voice communications.

Each tank vessel having a COW system under §157.10(e), §157.10a(a)(2), or §157.10c(b)(2) must have a means that enables two-way voice communications between the main deck watch required under §157.168 and each cargo discharge control station.

[CGD 82–28, 50 FR 11628, Mar. 22, 1985]

§157.138 Crude Oil Washing Operations and Equipment Manual.

(a) Each *Crude Oil Washing Operations and Equipment Manual* must include the following information:

(1) The text of the Annex of Resolution 15 of the MARPOL Protocol.

(2) A line drawing of the tank vessel's COW system showing the locations of pumps, piping, and COW machines.

(3) A description of the COW system.

(4) The procedure for the inspection of the COW system during COW operations.

(5) Design characteristic information of the COW system that includes the following:

(i) Pressure and flow of the crude oil pumped to the COW machines.

(ii) Revolutions, number of cycles, and length of cycles of each COW machine.

(iii) Pressure and flow of the stripping suction device.

(iv) Number and location of COW machines operating simultaneously in each cargo tank.

(6) The design oxygen content of the gas or mixture of gases that is supplied by the inert gas system to each cargo tank.

(7) The results of the inspections recorded when passing the inspections under §157.140.

(8) Characteristics of the COW system recorded during the COW operations when passing the inspections under §157.140 that includes the following:

(i) Pressure and flow of the crude oil pumped to the COW machines.

(ii) Revolutions, number of cycles, and length of cycles of each COW machine.

(iii) Pressure and flow of the stripping device.

(iv) Number and location of COW machines operating simultaneously in each cargo tank.

(9) The oxygen content of the gas or mixture of gases that is supplied by the inert gas system to each cargo tank recorded during COW operations when passing the inspections under § 157.140.

(10) The volume of water used for water rinsing recorded during COW operations when passing the inspections under § 157.140.

(11) The trim conditions of the tank vessel recorded during COW operations when passing the inspections under § 157.140.

(12) The procedure for stripping cargo tanks of crude oil.

(13) The procedure for draining and stripping the pumps and piping of the COW system, cargo system, and stripping system after each crude oil cargo discharge.

(14) The procedure for crude oil washing cargo tanks that includes the following:

(i) The tanks to be crude oil washed to meet § 157.160.

(ii) The order in which those tanks are washed.

(iii) The single-stage or multi-stage method of washing each tank.

(iv) The number of COW machines that operate simultaneously in each tank.

(v) The duration of the crude oil wash and water rinse.

(vi) The volume of water to be used for water rinse in each tank.

(15) The procedures and equipment needed to prevent leakage of crude oil from the COW system.

(16) The procedures and equipment needed if leakage of crude oil from the COW system occurs.

(17) The procedures for testing and inspecting the COW system for leakage of crude oil before operating the system.

(18) The procedures and equipment needed to prevent leakage of crude oil from the steam heater under § 157.122(i) to the engine room.

(19) The number of crew members needed to conduct the following:

(i) The discharge of cargo.

(ii) The crude oil washing of cargo tanks.

(iii) The simultaneous operations in paragraphs (a)(19) (i) and (ii) of this section.

(20) A description of the duties of each crew member under paragraph (a)(19) of this section.

(21) The procedures for ballasting and deballasting cargo tanks.

(22) The step by step procedure for the inspection of the COW system by vessel personnel before COW operations begin that includes the procedure for inspecting and calibrating each instrument. (Operational Checklist)

(23) The intervals for on board inspection and maintenance of the COW equipment. Informational references to technical manuals supplied by the manufacturers may be included in this part of the manual.

(24) A list of crude oils that are not to be used in COW operations.

(25) The procedure to meet § 157.155(a)(4).

(b) In addition to meeting paragraph (a) of this section, each *Crude Oil Washing Operations and Equipment Manual* on a tank vessel having a COW system under § 157.10a(a)(2) or § 157.10c(b)(2) must include the following:

(1) The procedure to meet § 157.166.

(2) The procedures to meet § 157.155(b).

[CGD 77–058b, 45 FR 43709, June 30, 1980, as amended by CGD 82–28, 50 FR 11628, Mar. 22, 1985]

INSPECTIONS

§ 157.140 Tank vessel inspections.

(a) Before issuing a letter under § 157.142, the Coast Guard makes an initial inspection of each U.S. tank vessel having a COW system under § 157.10(e), § 157.10(a)(2), or § 157.10c(b)(2) and each foreign tank vessel whose owner or operator submitted the plans under § 157.102 to determine whether or not, when entering a port, the cargo tanks that carry crude oil meet the following:

(1) After each tank is crude oil washed but not water rinsed, except the bottom of the tank may be flushed with water and stripped, each tank is essentially free of oil clingage or deposits of oil, or both to a degree acceptable to the Coast Guard inspector.

(2) After the tanks that are to be used as ballast tanks when leaving the port are crude oil washed and stripped but not water rinsed or bottom flushed, they are filled with water and the total volume of crude oil floating on top of the water in these tanks is 0.085 percent or less of the total volume of these tanks.

(b) Except on a tank vessel under § 157.10(e), if the initial inspection under paragraph (a) of this section has been passed and the vessel arrives at the first cargo loading port after completing a ballast voyage, the Coast Guard monitors the discharge of effluent from those tanks that have been crude oil washed, water rinsed, stripped, and filled with ballast water to determine whether or not the oil content of the effluent is 15 ppm or less.

[CGD 77–058b, 45 FR 43709, June 30, 1980, as amended by CGD 82–28, 50 FR 11628, Mar. 22, 1985]

§ 157.142 Letter of acceptance: Inspections.

If the inspections under § 157.140 are passed, the Coast Guard issues to the tank vessel a letter that states that the vessel complies with this subpart.

§ 157.144 Tank vessels of the same class: Inspections.

(a) If more than one tank vessel is constructed from the same plans, the owner or operator may submit a written request to the Commandant (G–MOC), U.S. Coast Guard, Washington, D.C. 20593–0001, for only one of those tank vessels to be inspected under § 157.140.

(b) Only one tank vessel of the class is inspected under § 157.140, if the Commandant accepts the request submitted under paragraph (a) of this section.

[CGD 77–058b, 45 FR 43709, June 30, 1980, as amended by CGD 82–28, 50 FR 11630, Mar. 22, 1985; CGD 88–052, 53 FR 25122, July 1, 1988; CGD 96–026, 61 FR 33668, June 28, 1996]

§ 157.146 Similar tank design: Inspections on U.S. tank vessels.

(a) If a U.S. tank vessel has tanks similar in dimensions and internal structure, the owner or operator may submit a written request to the Officer in Charge, Marine Inspection, of the zone in which the COW system is inspected, for only one of those tanks to be inspected under § 157.140(a)(1).

(b) Only one tank of a group of tanks similar in dimensions and internal structure is inspected under § 157.140(a)(1), if the Officer in Charge, Marine Inspection, accepts the request submitted under paragraph (a) of this section.

§ 157.147 Similar tank design: Inspections on foreign tank vessels.

(a) If a foreign tank vessel has tanks similar in dimensions and internal structure, the owner or operator may submit a written request to the Commandant (G–MOC), U.S. Coast Guard, Washington, D.C. 20593–0001, for only one of those tanks to be inspected under § 157.140(a)(1).

(b) Only one tank of a group of tanks similar in dimensions and internal structure is inspected under § 157.140(a)(1), if the Commandant accepts the request submitted under paragraph (a) of this section.

[CGD 77–058b, 45 FR 43709, June 30, 1980, as amended by CGD 82–28, 50 FR 11630, Mar. 22, 1985; CGD 88–052, 53 FR 25122, July 1, 1988; CGD 96–026, 61 FR 33668, June 28, 1996]

§ 157.148 COW system: Evidence for inspections.

(a) Before the inspections under § 157.140 are conducted by the Coast Guard, the owner or operator of a foreign tank vessel that is to be inspected must submit to the Coast Guard inspector evidence that the COW system has been installed in accordance with the plans accepted under § 157.106.

(b) Before the inspections under § 157.140 are conducted by the Coast Guard, the owner or operator of a tank vessel that is to be inspected must submit to the Coast Guard inspector evidence that the COW piping system has passed a test of 1½ times the design working pressure.

§ 157.150 Crude Oil Washing Operations and Equipment Manual: Recording information after inspections.

After passing the inspections under § 157.140, the owner, operator, and master shall ensure that the following are

recorded in the *Crude Oil Washing Operations and Equipment Manual* approved under § 157.112:

(a) The results of the inspections under § 157.140.

(b) The following characteristics used to pass the inspections under § 157.140:

(1) Pressure and flow of the crude oil pumped to the COW machines.

(2) Revolutions, number of cycles, and length of cycles of each COW machine.

(3) Pressure and flow of the stripping suction device.

(4) Number and location of COW machines operating simultaneously in each cargo tank.

(5) Volume of water used for water rinsing.

(6) Trim conditions of the tank vessel.

PERSONNEL

§ 157.152 Person in charge of COW operations.

The owner, operator, and master of a tank vessel having a COW system under § 157.10(e), § 157.10(a)(2), or § 157.10c(b)(2) shall ensure that the person designated as the person in charge of COW operations—

(a) Knows the contents in the *Crude Oil Washing Operations and Equipment Manual* approved by the Coast Guard under § 157.112 or by the government of the vessel's flag state;

(b) On at least two occasions, has participated in crude oil washing of cargo tanks, one of those occasions occurring on:

(1) The tank vessel on which the person assumes duties as the person in charge of COW operations; or

(2) A tank vessel that is similar in tank design and which has COW equipment similar to that used on the tank vessel on which the person assumes duties as the person in charge of COW operations; and

(c) Has one year or more of tank vessel duty that includes oil cargo discharge operations and:

(1) Crude oil washing of cargo tanks; or

(2) Has completed a training program in crude oil washing operations that is approved by the Coast Guard or the government of the vessel's flag state.

NOTE: Standards of a Coast Guard approved training program are to be developed.

[CGD 77–058b, 45 FR 43709, June 30, 1980, as amended by CGD 82–28, 50 FR 11628, Mar. 22, 1985]

§ 157.154 Assistant personnel.

The owner, operator, and master of a tank vessel having a COW system under § 157.10(e), § 157.10a(a)(2), or § 157.10c(b)(2) shall ensure that each member of the crew that has a designated responsibility during COW operations—

(a) Has six months or more of tank vessel duty that includes oil cargo discharge operations;

(b) Has been instructed in the COW operation of the tank vessel; and

(c) Is familiar with the contents of the *Crude Oil Washing Operations and Equipment Manual* approved by the Coast Guard under § 157.112 or by the government of the vessel's flag state.

[CGD 77–058b, 45 FR 43709, June 30, 1980, as amended by CGD 82–28, 50 FR 11628, Mar. 22, 1985]

COW OPERATIONS

§ 157.155 COW operations: General.

(a) The master of a tank vessel having a COW system under § 157.10(e), § 157.10a(a)(2), or 157.10c(b)(2) shall ensure that—

(1) Before crude oil washing a cargo tank, the level in each tank with crude oil that is used as a source for crude oil washing is lowered at least one meter;

(2) A tank used as a slop tank is not used as a source for crude oil washing until:

(i) Its contents are discharged ashore or to another tank; and

(ii) The tank contains only crude oil;

(3) During COW operations:

(i) The valves under § 157.122(i)(1) are shut; or

(ii) The blanks under § 157.122(i)(2) are installed;

(4) The rotation of each COW machine mounted to or close to the bottom of each cargo tank is verified by:

(i) A visual inspection of a means located outside of the cargo tank that indicates movement of the machine during COW operations;

(ii) An audio inspection during COW operations; or

(iii) An inspection on a ballast voyage, with water as the fluid flowing through the machine;

(5) During the audio inspection under paragraph (a)(4)(ii) of this section, the COW machine being inspected is the only one operating in that tank;

(6) Before the inspection under paragraph (a)(4)(iii) of this section, the tank that has the COW machine being inspected in it, is gas freed;

(7) Each COW machine that is inspected under paragraph (a)(4)(iii) of this section is inspected at least once after every sixth COW operation of that machine, but no less that once every 12 months;

(8) After each stripping operation is completed, each tank:

(i) Is sounded by a means under § 157.128(b); and

(ii) Contains no oil except a minimal quantity near the stripping suction;

(9) Before the tank vessel begins each ballast voyage, each cargo tank and each cargo main, stripping, and COW piping is stripped of crude oil and the strippings are conveyed ashore through the piping under §§ 157.11(d)(3) or 157.11(e)(4);

(10) Before water washing the cargo tanks, the piping of the COW system is drained of crude oil;

(11) When the cargo tanks are not being water washed, the hydrant valves under § 157.122(g) are blanked off;

(12) If COW machines that are used as anchors for the piping of the COW system are removed, the means available under § 157.122(l) for anchoring the piping are installed;

(13) The fire main is not connected to the COW system; and

(14) On combination carriers, if flexible hoses under § 157.122(o) are used, those hoses are protectively stowed when not installed in the COW piping system.

(b) In addition to meeting paragraph (a) of this section, the master of a tank vessel having a COW system under § 157.10a(a)(2) or § 157.10c(b)(2) shall ensure that—

(1) Before ballasting cargo tanks upon leaving a port, each cargo pump, manifold, and piping that is used for ballasting the cargo tanks is drained of all crude oil; and

(2) Before ballasting or deballasting cargo tanks, except when ballasting cargo tanks to leave a port, the cargo piping that is used for ballasting or deballasting the cargo tanks is water washed.

[CGD 77–058b, 45 FR 43709, June 30, 1980, as amended by CGD 82–28, 50 FR 11628, Mar. 22, 1985]

§ 157.156 COW operations: Meeting manual requirements.

Except as allowed in § 157.158, the master of a foreign tank vessel having a COW system under §§ 157.10(e), 157.10a(a)(2), or 157.10c(b)(2) that has the *Crude Oil Washing Operations and Equipment Manual* approved under § 157.112 and is operating in the navigable waters of the United States or transferring cargo at a port or place subject to the jurisdiction of the United States and the master of a U.S. tank vessel having a COW system under § 157.10(e), § 157.10a(a)(2), or § 157.10c(b)(2) shall ensure that during each COW operation—

(a) The procedures listed in the *Crude Oil Washing Operations and Equipment Manual* are followed; and

(b) The characteristics recorded in the *Crude Oil Washing Operations and Equipment Manual* under § 157.150(b) are met.

[CGD 77–058b, 45 FR 43709, June 30, 1980, as amended by CGD 82–28, 50 FR 11628, Mar. 22, 1985]

§ 157.158 COW operations: Changed characteristics.

The COW system may be operated with characteristics that do not meet those recorded under § 157.150(b) only if:

(a) The tank vessel passes the inspections under § 157.140 using the changed characteristics;

(b) The changed characteristics used to pass the inspections under § 157.140 are recorded in the *Crude Oil Washing Operations and Equipment Manual* approved under § 157.112; and

(c) The Coast Guard issues to the tank vessel an amending letter stating that the tank vessel complies with this subpart with these characteristics.

§ 157.160 Tanks: Ballasting and crude oil washing.

(a) The owner, operator, and master of a tank vessel under § 157.10(e) shall ensure that:

(1) Ballast water is carried in a cargo tank only as allowed under § 157.35;

(2) For sludge control, at least 25 percent of the cargo tanks are crude oil washed before each ballast voyage and that each cargo tank is crude oil washed at least once every fourth time crude oil is discharged from the tank, but no tank need be crude oil washed more than once during each 120 day period;

(3) Ballast water in a cargo tank that is crude oil washed but not water rinsed during or after the most recent discharge of crude oil from that tank is discharged in accordance with § 157.37(a); and

(4) Cargo tanks are not crude oil washed during a ballast voyage.

(b) The owner, operator, and master of a tank vessel having a COW system under § 157.10a(a)(2) or § 157.10c(b)(2) shall ensure that—

(1) Ballast water is carried only in a cargo tank that is crude oil washed during or after the most recent discharge of crude oil from that tank;

(2) Before each ballast voyage a sufficient number of cargo tanks have been crude oil washed during or after the most recent discharge of crude oil from those tanks to allow ballast water to be carried in cargo tanks:

(i) With a total capacity to meet the draft and trim requirements in § 157.10a(d); and

(ii) For the vessel's trading pattern and expected weather conditions;

(3) For sludge control, at least 25 percent of the cargo tanks not used for carrying ballast water under paragraph (b)(2)(i) of this section are crude oil washed before each ballast voyage, and that each cargo tank is crude oil washed at least once every fourth time crude oil is discharged from the tank, but no tank need be crude oil washed more than once during each 120 day period;

(4) Cargo tanks are not crude oil washed during a ballast voyage; and

(5) Ballast water in a cargo tank that is crude oil washed but not water rinsed during or after the most recent discharge of crude oil from that tank is discharged in accordance with § 157.37(a).

[CGD 77–058b, 45 FR 43709, June 30, 1980, as amended by CGD 82–28, 50 FR 11628, Mar. 22, 1985]

§ 157.162 Crude oil washing during a voyage.

The master of a tank vessel having a COW system under § 157.10(e), § 157.10a(a)(2), or § 157.10c(b)(2) shall ensure that each cargo tank that is crude oil washed during a voyage other than a ballast voyage—

(a) Remains empty so that the tank may be inspected upon arrival at the next discharge port; and

(b) If it is to be used as a ballast tank when leaving the discharge port, is ballasted before the vessel departs from that discharge port so that the tank may be inspected under § 157.140(a)(2).

[CGD 77–058b, 45 FR 43709, June 30, 1980, as amended by CGD 82–28, 50 FR 11628, Mar. 22, 1985]

§ 157.164 Use of inert gas system.

(a) The master of a tank vessel having a COW system under § 157.10(e), § 157.10a(a)(2), or § 157.10c(b)(2) shall ensure the following:

(1) Before each cargo tank is crude oil washed, the oxygen content in the tank is measured at each of the following locations in the tank:

(i) One meter from the deck.

(ii) In the center of the ullage space.

(2) Before each cargo tank with partial bulkheads is crude oil washed, each area of that tank formed by each partial bulkhead is measured in accordance with paragraph (a)(1) of this section.

(3) Before each cargo tank is crude oil washed, the oxygen content in that tank is 8 percent or less by volume at the locations under paragraph (a)(1) of this section.

(4) During COW operations, the following are maintained in each cargo tank being crude oil washed:

(i) A gas or a mixture of gases with an oxygen content of 8 percent or less by volume.

(ii) A positive atmospheric pressure.

(5) During COW operations, a crew member monitors the instrumentation

under 46 CFR 32.53–60(a)(1), except if that instrumentation has an alarm that sounds in the cargo control room when the oxygen content exceeds 8 percent by volume.

(b) Crude oil washing of the cargo tanks must be terminated when paragraph (a)(4) of this section is not met and crude oil washing of that tank may not be resumed until the requirements of paragraph (a)(4) of this section are met.

[CGD 77–058b, 45 FR 43709, June 30, 1980, as amended by CGD 82–28, 50 FR 11628, Mar. 22, 1985]

§ 157.166 Hydrocarbon emissions.

If the tank vessel having a COW system under § 157.10a(a)(2) or § 157.10c(b)(2) transfers cargo at a port in the United States that is in an area designated in 40 CFR Part 81 as an area that does not meet the national primary ambient air quality ozone standard under 40 CFR Part 50, issued under the Clean Air Act, as amended (42 U.S.C. 1857), the master of the vessel shall ensure that when cargo tanks are ballasted in that port the hydrocarbon vapors in each tank are contained by a means under § 157.132.

NOTE: Questions relating to whether or not a particular port is located in an area designated in 40 CFR Part 81 as an area that does not meet the national primary ambient air quality standard under 40 CFR Part 50 should be directed to the Plans Analysis Section of the Environmental Protection Agency at (919) 541–5665.

[CGD 82–28, 50 FR 11628, Mar. 22, 1985]

§ 157.168 Crew member: Main deck watch.

During COW operations, the master shall ensure that at least one member of the crew with a designated responsibility for monitoring COW operations is on the main deck at all times.

§ 157.170 COW equipment: Removal.

(a) Whenever a deck mounted COW machine is removed from the tank, the master shall ensure that:

(1) The supply piping to that machine is blanked off; and

(2) The tank opening is sealed by a secured plate made of steel or an equivalent material accepted by the Commandant.

(b) If the equipment for the COW system is removed from a cargo tank for the carriage of cargoes other than crude oil and then reinstalled, the master shall ensure that, before COW operations are conducted, the system has no crude oil leakage.

§ 157.172 Limitations on grades of crude oil carried.

If a tank vessel having a COW system meeting § 157.10a(a)(2) or § 157.10c(b)(2) does not have segregated ballast tanks or dedicated clean ballast tanks that meet § 157.10c(c)(2), the owner, operator, and master shall ensure that the vessel carries only the grades of crude oil that can be used for crude oil washing.

[CGD 82–28, 50 FR 11628, Mar. 22, 1985]

Subpart E—Dedicated Clean Ballast Tanks on Tank Vessels

SOURCE: CGD 77–058b, 45 FR 43714, June 30, 1980, unless otherwise noted.

GENERAL

§ 157.200 Plans for U.S. tank vessels: Submission.

(a) Before modifications are made to a U.S. vessel to meet § 157.10a(b), § 157.10b(a)(2), § 157.10a(c)(2), or § 157.10c(c)(2), the owner or operator must submit to the Coast Guard plans or documents that include the following:

(1) The dedicated clean ballast tank arrangement.

(2) Documentation, calculations, or revised stability information to show that the vessel, with the addition of the dedicated clean ballast tanks, meets the stability standards for load line assignment in 46 CFR Part 42.

(3) Documentation, calculations, or a loading manual to show that the vessel, with the addition of the dedicated clean ballast tanks, meets the structural standards in 46 CFR Part 32.

(4) A drawing or diagram of the pumping and piping system for the dedicated clean ballast tanks.

(b) Plans under paragraph (a) of this section must be submitted to the Officer in Charge, Marine Inspection, of the zone in which the dedicated clean ballast tank system is installed or to

the Commanding Officer, U.S. Coast Guard Marine Safety Center, 400 7th Street, SW., Washington, DC 20590–0001.

(Reporting and recordkeeping requirements approved by the Office of Management and Budget under control number 2115–0520)

[CGD 77–058b, 45 FR 43714, June 30, 1980, as amended by CGD 79–152, 45 FR 82250, Dec. 15, 1980; CGD 82–28, 50 FR 11628, and 11630, Mar. 22, 1985; CGD 85–048a, 51 FR 15481, Apr. 24, 1986; USCG–1998–3799, 63 FR 35531, June 30, 1998]

§ 157.202 Plans and documents for foreign tank vessels: Submission.

The owner or operator of a foreign tank vessel under § 150.10a(b), § 157.10a(c)(2), or § 157.10b(a)(2) who desires the letter from the Coast Guard under § 157.204 accepting the plans submitted under this paragraph, and the owner or operator of a foreign tank vessel under § 150.10c(c)(2) must submit to the Commandant (G–MOC), U.S. Coast Guard, Washington, D.C. 20593–0001—

(a) Plans that include:

(1) The dedicated clean ballast tank arrangement; and

(2) A drawing or diagram of the pumping and piping system for the dedicated clean ballast tanks; and

(b) Documentation from the authority that assigned the load line to the tank vessel that states that the location of the dedicated clean ballast tanks is acceptable to that authority.

[CGD 77–058b, 45 FR 43714, June 30, 1980, as amended by CGD 82–28, 50 FR 11629, Mar. 22, 1985; CGD 88–052, 53 FR 25122, July 1, 1988; CGD 96–026, 61 FR 33668, June 28, 1996]

§ 157.204 Letter of acceptance.

The Coast Guard informs the submitter by letter that the plans submitted under § 157.200 or the plans and documents submitted under § 157.202 are accepted, if the plans submitted under § 157.200 or the plans and documents submitted under § 157.202 show that the dedicated clean ballast tank system meets this subpart.

§ 157.206 Dedicated Clean Ballast Tanks Operations Manual for U.S. tank vessels: Submission.

The owner or operator of a U.S. tank vessel meeting § 157.10a(b), §157.10a(c)(2), § 157.10b(a)(2), or § 157.10c(c)(2) must submit two copies of a manual that meets § 157.224 to the Officer in Charge, Marine Inspection, of the zone in which the dedicated clean ballast tank system is installed or to the appropriate Coast Guard field technical office listed in § 157.200(b).

(Reporting and recordkeeping requirements approved by the Office of Management and Budget under control number 2115–0520)

[CGD 82–28, 50 FR 11629, and 11630, Mar. 22, 1985]

§ 157.208 Dedicated Clean Ballast Tanks Operations Manual for foreign tank vessels: Submission.

If the owner or operator of a foreign tank vessel meeting § 157.10a(b), § 157.10a(c)(2), § 157.10b(a)(2), or § 157.10c(c)(2) desires a Coast Guard approved *Dedicated Clean Ballast Tanks Operations Manual* under § 157.210, the owner or operator must submit two copies of a manual that meets § 157.224 to the Commandant (G–MOC), U.S. Coast Guard, Washington, D.C. 20593–0001.

(Reporting and recordkeeping requirements approved by the Office of Management and Budget under control number 2115–0520)

[CGD 82–28, 50 FR 11629, and 11630, Mar. 22, 1985, as amended by CGD 88–052, 53 FR 25122, July 1, 1988; CGD 96–026, 61 FR 33668, June 28, 1996]

§ 157.210 Approved Dedicated Clean Ballast Tanks Operations Manual.

If the manuals submitted under § 157.206 or § 157.208 meet § 157.224, the Coast Guard approves the manuals and forwards one of the approved manuals to the submitter.

§ 157.212 Dedicated Clean Ballast Tanks Operations Manual: Not approved.

If the *Dedicated Clean Ballast Tanks Operations Manual* submitted under § 157.206 or § 157.208 is not approved, the Coast Guard forwards a letter to the submitter with the reasons why the manual was not approved.

§ 157.214 Required documents: U.S. tank vessels.

The owner, operator, and master of a U.S. tank vessel meeting § 157.10a(b), § 157.10a(c)(2), § 157.10b(a)(2), or

§ 157.10c(c)(2) shall ensure that the vessel does not engage in a voyage unless the vessel has on board—

(a) The letter under § 157.204 accepting the dedicated clean ballast tank system plans;

(b) The Coast Guard approved *Dedicated Clean Ballast Tanks Operations Manual* under § 157.210; and

(c) Any amending letters issued under § 157.218 approving alterations.

(Reporting and recordkeeping requirements approved by the Office of Management and Budget under control number 2115–0520)

[CGD 77–058b, 45 FR 43714, June 30, 1980, as amended by CGD 82–28, 50 FR 11629, and 11630, Mar. 22, 1985]

§ 157.216 Required documents: Foreign tank vessels.

(a) The owner, operator, and master of a foreign tank vessel meeting § 157.10a(b), § 157.10a(c)(2), § 157.10b(a)(2), or § 157.10c(c)(2) shall ensure that the vessel does not enter the navigable waters of the United States or transfer cargo at a port or place subject to the jurisdiction of the United States unless the vessel has on board—

(1) The *Dedicated Clean Ballast Tank Operations Manual* that—

(i) Is approved under § 157.210; or

(ii) Is certified by the government of the vessel's flag state because it meets the manual standards in Resolution 14 of the MARPOL Protocol; and

(2) Either of the following:

(i) A letter from the government of the vessel's flag state that certifies that the vessel complies with Resolution 14 of the MARPOL Protocol.

(ii) The letter of acceptance under § 157.204 and each amending letter issued under § 157.218(c).

(b) On January 1, 1986, or 15 years after the date it was delivered to the original owner or 15 years after the completion of a major conversion, whichever is later, the owner, operator, and master of a foreign tank vessel under § 157.10c(c)(2) shall ensure that the vessel does not enter the navigable waters of the United States or transfer cargo at a port or place subject to the jurisdiction of the United States unless the vessel has on board—

(1) The *Dedicated Clean Ballast Tank Operations Manual* that—

(i) Is approved under § 157.210; or

(ii) Bears a certification by an authorized CS or the government of the vessel's flag state that the manual meets § 157.224; and

(2) Either of the following:

(i) A letter from an authorized CS or the government of the vessel's flag state certifying the vessel complies with §§ 157.220 and 157.222, and any amending letters issued approviding alterations.

(ii) The letter of acceptance under § 157.204 and each amending letter issued under § 157.218.

(Reporting and recordkeeping requirements approved by the Office of Management and Budget under control number 2115–0520)

[CGD 82–28, 50 FR 11629, and 11630, Mar. 22, 1985]

§ 157.218 Dedicated clean ballast tanks: Alterations.

The dedicated clean ballast tanks or equipment on a tank vessel that has a letter issued under § 157.204 may not be altered so that they no longer meet the plans accepted under that section unless:

(a) The owner or operator of that vessel submits plans that show the alterations to the Coast Guard official to which the plans were submitted under § 157.200 or § 157.202;

(b) The owner or operator of that vessel submits changes to the manual under § 157.224 that show and describe the alterations to the Coast Guard official to which the manuals were submitted under § 157.206 or § 157.208; and

(c) The Coast Guard issues to the tank vessel an amending letter stating that the vessel, as altered, complies with this subpart.

DESIGN AND EQUIPMENT

§ 157.220 Dedicated clean ballast tanks: Standards.

(a) Cargo tanks that are designated as dedicated clean ballast tanks must allow the tank vessel to meet the draft and trim requirements under §§ 157.10a(d) and 157.10b(b).

(b) Each tank under paragraph (a) of this section must be:

(1) A wing tank; or

(2) Any other tank that is accepted by the Commandant.

[CGD 77–058b, 45 FR 43714, June 30, 1980, as amended by CGD 79–152, 45 FR 82250, Dec. 15, 1980]

§ 157.222 Pump and piping arrangements.

(a) Dedicated clean ballast tanks must be connected to the least practicable:

(1) Number of pumps; and

(2) Amount of piping.

(b) Each piping system that is arranged to convey clean ballast and cargo must be designed to be flushed to the slop tank with water.

(c) The piping system of each dedicated clean ballast tank must be arranged so that oily water does not enter any dedicated clean ballast tank when the piping system is flushed.

(d) The piping system of each dedicated clean ballast tank must have at least two valves that isolate that tank from each cargo tank.

(e) The piping system of the dedicated clean ballast tanks must have a sample point that is located in a vertical section of discharge piping.

NOTE: An example of a sample point is shown in 46 CFR Figure 162.050–17(e).

§ 157.224 Dedicated Clean Ballast Tanks Operations Manual.

Each *Dedicated Clean Ballast Tanks Operations Manual* must include the following information:

(a) The text of the Annex of Resolution 14 of the MARPOL Protocol.

(b) A description of the dedicated clean ballast tanks system.

(c) A procedure for dedicated clean ballast tanks operations.

NOTE: Appendix D is an example of such a procedure.

DEDICATED CLEAN BALLAST TANKS OPERATIONS

§ 157.225 Dedicated clean ballast tanks operations: General.

The master of a tank vessel meeting § 157.10a(b), § 157.10a(c)(2), § 157.10b(a)(2), or § 157.10c(c)(2) shall ensure that—

(a) Before clean ballast in any dedicated clean ballast tank is discharged or transferred, the pump and piping system for conveying the clean ballast are flushed with water;

(b) Before any dedicated clean ballast tank is ballasted, the pump and piping system for conveying the ballast are flushed with water;

(c) Before the pump and piping system of the dedicated clean ballast tanks are used for cargo transfer:

(1) If water in the dedicated clean ballast tanks is used for flushing the pump and piping system, the volume of water for flushing is equal to at least 10 times the volume of the piping to be flushed;

(2) The piping system is drained of fluid; and

(3) The valves under § 157.222(d) are closed;

(d) Flushing water is pumped from a sea chest or a dedicated clean ballast tank through the pump and piping system of the dedicated clean ballast tanks and then to a slop tank;

(e) Clean ballast from each dedicated clean ballast tank is discharged in accordance with § 157.43;

(f) When the pump and piping system are being flushed:

(1) The oil content of the flushing water in the piping system is monitored; and

(2) The pump and piping system are flushed until the oil content of the flushing water in the piping stabilizes; and

(g) If any pump or piping system that is flushed to meet paragraph (f) of this section is used to convey cargo during an emergency, that pump or piping system is flushed again to meet paragraph (f) of this section before being used to convey clean ballast.

[CGD 77–058b, 45 FR 43714, June 30, 1980, as amended by CGD 82–28, 50 FR 11629, Mar. 22, 1985]

§ 157.226 Dedicated Clean Ballast Tanks Operations Manual: Procedures to be followed.

The master of a foreign tank vessel meeting § 157.10a(b), § 157.10a(c)(2), § 157.10b(a)(2), or § 157.10c(c)(2) that has the *Dedicated Clean Ballast Tanks Operations Manual* approved under § 157.210 and is operating in the navigable waters of the United States or transferring cargo at a port or place subject to the jurisdiction of the United States and the master of a U.S. tank vessel meeting § 157.10a(b), § 157.10a(c)(2),

§157.10b(a), or §157.10c(c)(1) shall ensure that the procedure listed in the *Dedicated Clean Ballast Tanks Operations Manual* are followed.

[CGD 82–28, 50 FR 11629, Mar. 22, 1985]

§157.228 Isolating Valves: Closed during a voyage.

(a) The master of each U.S. tank vessel under §157.10a(b), §157.10a(c)(2), §157.10b(a)(2), or §157.10c(c)(2) shall ensure that the valves under §157.222(d) remain closed during each voyage.

(b) The master of each foreign tank vessel meeting §157.10a(b), §157.10a(c)(2), §157.10b(a)(2), or §157.10c(c)(2) shall ensure that the valves under §157.222(d) remain closed when the vessel is on a voyage in the navigable waters of the United States.

[CGD 82–28, 50 FR 11629, Mar. 22, 1985]

Subpart F—Exemption From §157.10a or §157.10c

SOURCE: CGD 79–126, 46 FR 3513, Jan. 15, 1981, unless otherwise noted.

§157.300 Qualifications for exemptions under this part.

(a) Each vessel under §157.10a or §157.10c of this part may qualify for an exemption from the requirements of §157.10a or §157.10c of this part if—

(1) The vessel loads and discharges cargo only at ports or places within the United States, its territories, or its possessions; and

(2) The application for exemption meets §157.302.

(b) Except where the owner can show good cause, a vessel is not granted an exemption under this subpart if a previous exemption for the vessel has been revoked by the Coast Guard under §157.308(a)(1) or §157.308 (a)(2).

[CGD 79–126, 46 FR 3513, Jan. 15, 1981, as amended by CGD 82–28, 50 FR 11630, Mar. 22, 1985]

§157.302 Applying for an exemption or requesting modification of an exemption.

(a) Each application for an exemption or modification must be in writing and submitted to the Commandant (G–MOC), U.S. Coast Guard, Washington, D.C. 20593–0001.

(b) Each application for exemption must include the following: (1) The name and official number of the vessel for which the exemption is requested.

(2) A list of each port or place where the vessel would load cargo.

(3) The name, address, and telephone number for each shore-based reception facility at each port listed under paragraph (b)(2) of this section where the vessel would discharge its ballast water and cargo residues, including:

(i) The name or title of the person at each facility who should be contacted for information concerning the operation of the reception facility; and

(ii) A statement from the facility owner disclosing whether or not, based on current operating conditions, the facility has the capability of processing the anticipated volume and type of discharges from the vessel without adversely affecting the service of the facility to current users.

(4) The number of the permit under the National Pollutant Discharge Elimination System (NPDES permit) issued to each listed shore-based reception facility.

(5) A list of each type of oil cargo that the vessel would load.

(6) A description of the method by which the vessel would discharge ballast water and cargo residues to each listed shore based reception facility.

(c) Each request for modification to an exemption must include the following:

(1) The name and official number of the vessel for which the modification to the exemption is requested.

(2) The reason for requesting modification of the exemption.

(3) Any additional information which is pertinent to the modification.

[CGD 79–126, 46 FR 3513, Jan. 15, 1981, as amended by CGD 82–28, 50 FR 11630, Mar. 22, 1985; CGD 88–052, 53 FR 25122, July 1, 1988; CGD 96–026, 61 FR 33668, June 28, 1996]

§157.304 Shore-based reception facility: standards.

No shore-based reception facility may be listed to meet §157.302(b)(3) unless that reception facility has:

(a) A valid NPDES permit which allows it to process the ballast water and cargo residues of the vessel for which the exemption is being requested; and

(b) The capacity to receive and store a volume of dirty ballast water equivalent to 30 percent of the deadweight, less the segregated ballast volume, of the vessel for which the exemption is being requested.

§ 157.306 Granting, denying, or modifying an exemption.

(a) The Assistant Commandant for Marine Safety and Environmental Protection issues a written decision concerning the grant or denial of each exemption or modification requested under § 157.302.

(b) If the exemption or request for modification is denied, the decision under paragraph (a) of this section includes the reasons for the denial.

(c) Any person directly affected by, and not satisfied with, a decision made under paragraph (a) of this section may appeal that decision, in writing, to the Commandant (G–MOC), U.S Coast Guard, Washington, DC 20593–0001. The appeal may contain any supporting documentation or evidence that the appellant wishes to have considered.

(d) The Commandant, U.S. Coast Guard issues a ruling after reviewing the appeal submitted under paragraph (c) of this section. This ruling is final agency action.

[CGD 79–126,46 FR 3513, Jan. 15, 1981, as amended by CGD 88–052, 53 FR 25122, July 1, 1988; CGD 96–026, 61 FR 33668, June 28, 1996; CGD 97–023, 62 FR 33364, June 19, 1997]

§ 157.308 Revocation of exemption: procedure and appeals.

(a) The Officer in Charge, Marine Inspection may consider the revocation of the exemption granted under this subpart when:

(1) Requested by the vessel's owner;

(2) There is evidence that the vessel's owner, operator, or master has failed to comply with the requirements of this subpart; or

(3) There have been changes to the NPDES permit of a reception facility listed to meet § 157.304(b)(3) that would adversely affect the ability of that facility to process the vessel's discharges.

(b) The Officer in Charge, Marine Inspection, of the zone in which an occurrence under paragraph (a)(2) or (a)(3) of this section takes place notifies the owner, operator, and master of the exempted vessel of the specific reasons for considering the revocation of the exemption.

(c) Evidence or arguments for the retention of the exemption that are submitted to the Officer in Charge, Marine Inspection within thirty days of receipt of the notice under paragraph (b) of this section will be considered before a ruling is made.

(d) If the owner is not satisfied with the ruling made under this section by the Officer in Charge, Marine Inspection, that ruling may be appealed under the procedure in § 157.06 of this part.

§ 157.310 Exempted vessels: operations.

The owner, operator, and master of each vessel that has been granted an exemption under this subpart must ensure that:

(a) The vessel trades only between ports or places within the United States, its territories or possessions;

(b) The vessel loads cargo only at ports or places listed in the exemption;

(c) Except as allowed under § 157.41 (a) and (b) of this part, any ballast water, except segregated ballast discharged in accordance with § 157.43(b) of this part, and any tank washing or cargo residues are:

(1) Retained on board; or

(2) Transferred to a shore-based reception facility that is listed in the application for exemption, or in the case of an emergency or a shipyard entry, an alternative acceptable to the cognizant Officer in Charge, Marine Inspection;

(d) The vessel loads only those cargoes listed in the exemption; and

(e) The letter under § 157.306 that grants the exemption is on board the vessel; or

(f) The certificate of inspection bearing the following endorsement is on board the vessel:

Exempted under 33 CFR 157.306 from the requirements of *(33 CFR 157.10a or 157.10c, whichever is appropriate, will be inserted).* This vessel may not discharge cargo in any foreign port, nor may it load cargo in a port other than the following: (*a list of ports contained in the application that is accepted by the Coast*

Guard for the exempted vessel will be inserted here).

[CGD 79–126, 46 FR 3513, Jan. 15, 1981, as amended by CGD 82–28, 50 FR 11630, Mar. 22, 1985]

Subpart G—Interim Measures for Certain Tank Vessels Without Double Hulls Carrying Petroleum Oils

SOURCE: CGD 91–045, 59 FR 40188, Aug. 5, 1994, unless otherwise noted.

§ 157.400 Purpose and applicability.

(a) The purpose of this subpart is to establish mandatory safety and operational requirements to reduce environmental damage resulting from petroleum oil spills.

(b) This subpart applies to each tank vessel specified in § 157.01 of this part that—

(1) Is 5,000 gross tons or more;

(2) Carries petroleum oil in bulk as cargo or cargo residue; and

(3) Is not equipped with a double hull meeting § 157.10d of this part, or an equivalent to the requirements of § 157.10d, but required to be equipped with a double hull at a date set forth in 46 U.S.C. 3703a (b)(3) and (c)(3).

[CGD 91–045, 61 FR 39788, July 30, 1996]

§ 157.410 Emergency lightering requirements for oil tankers.

Each oil tanker, to which this subpart applies, shall carry the equipment listed in paragraphs (a), (b), and (c) of this section. This equipment shall be located on the main deck, in the cargo control room, in the pump room, or in the forecastle locker. This equipment must be protected from the weather and must be stored in one separate and marked location which is as convenient to the cargo manifold, as is practicable.

(a) Reducers, adapters, bolts, washers, nuts, and gaskets to allow at least two simultaneous transfer connections to be made from the vessel's cargo manifold to 15-centimeter (6-inch), 20-centimeter (8-inch), and 25-centimeter (10-inch) cargo hoses. All reducers must be permanently marked with sizes.

(b) One extra set of adapters, bolts, washers, nuts, and gaskets per reducer set must be carried as spares.

(c) Reducers, bolts, and gaskets must meet the requirements of 46 CFR 56.25. Cast iron and malleable iron must not be used.

[CGD 91–045, 59 FR 40188, Aug. 5, 1994, as amended by CGD 91–045, 61 FR 39789, July 30, 1996; USCG–1998–3799, 63 FR 35531, June 30, 1998]

§ 157.415 Bridge resource management policy and procedures.

(a) Not later than February 1, 1997, a tankship owner or operator shall provide written policy and procedures to masters and officers in charge of the navigational watch concerning the need for continuously reassessing how bridge-watch resources are being allocated and used, based on bridge resource management principles. This written policy and procedures must include vessel and crew specific examples that address the following:

(1) The number of qualified individuals that should be on watch to ensure that all duties can be performed effectively.

(2) The appropriate qualifications of all members of the navigational watch, the importance of confirming that all members of the watch are fit for duty, and the need to ensure that all members of the navigational watch are not impaired by fatigue.

(3) The need to take into account any known limitation in qualifications or fitness of individuals when making navigational and operational decisions.

(4) The need to be clear and unambiguous in assigning duties and the need to establish that the individual understands his or her responsibilities.

(5) The need to perform tasks in a clear order of priority and to adjust the priority of tasks as circumstances may require.

(6) The importance of assigning and reassigning members of the watch to locations where they can perform their duties most effectively.

(7) Conditions that warrant task reassignment among members of the watch.

(8) The instruments and equipment necessary for the effective performance of each task and appropriate actions if

the instruments and equipment are not available or not functioning properly.

(9) The need for, and examples of, clear, immediate, reliable, and relevant communication among members of the navigational watch.

(10) The action to be taken to suppress, remove, and avoid nonessential activity and distractions on the bridge.

(11) The importance of collecting, processing, and interpreting all essential information and making it conveniently available to other members of the navigational watch and the pilot, as necessary to perform their duties.

(12) The need to ensure that nonessential materials are not placed on the bridge.

(13) The need to ensure that members of the navigational watch are prepared to respond at all times efficiently and effectively to changes in circumstances.

(b) Beginning not later than February 1, 1997, a tank barge owner or operator shall not permit the barge to be towed unless those individuals assigned to duties that are similar to the duties of the officer in charge of a navigational watch on the primary towing vessel have been provided written bridge resource management policy and procedures as specified in paragraph (a) of this section.

[CGD 91–045, 61 FR 39789, July 30, 1996]

§ 157.420 Vessel specific watch policy and procedures.

(a) Not later than February 1, 1997, the owner or operator of a tankship shall provide written policy and procedures to masters concerning the need for each individual who is newly employed on board the vessel to have a reasonable opportunity to become familiar with the shipboard equipment, operating procedures, and other arrangements needed for the proper performance of their duties, before being assigned to such duties. This written policy and procedures shall be followed by the master and shall include the following:

(1) Allocation of a reasonable and appropriate time period for each newly employed individual to allow him or her the opportunity to become acquainted with the following:

(i) The specific equipment the individual will be using or operating; and

(ii) The vessel specific watchkeeping, safety, environmental protection, and emergency procedures and arrangements the individual needs to know to perform the assigned duties properly.

(2) Designation of a knowledgeable crew member who will be responsible for ensuring that an opportunity is provided to each newly employed individual to receive essential information in a language the individual understands.

(b) Beginning not later than February 1, 1997, a tank barge owner or operator shall not permit the barge to be towed unless those individuals assigned to duties as master or operator on the primary towing vessel have been provided written policy and procedures as specified in paragraph (a) of this section.

[CGD 91–045, 61 FR 39789, July 30, 1996]

§ 157.430 Enhanced survey requirements.

Beginning at each tank vessel's next regularly scheduled drydock examination and continuing as required under 46 CFR part 31, or, for each foreign flagged tank vessel, beginning at the next drydock and continuing as required under the foreign vessel's flag administration, a tank vessel owner or operator shall—

(a) Implement an enhanced survey program that complies with the standards of IMO Resolution A.744(18), Annex B sections 1.1.3–1.1.4, 1.2–1.3, 2.1, 2.3–2.6, 3–8, and Annexes 1–10 with appendices;

(b) Implement a vessel specific survey program that provides a level of protection equivalent to the requirements in paragraph (a)(1) of this section and is approved by the Commandant (G–MOC). A written request for program equivalency under this paragraph must be submitted to the Commandant (G–MOC); or

(c) For a tankship of less than 20,000 deadweight tons (dwt) carrying crude oil, a tankship of less than 30,000 dwt carrying product, or a tank barge, implement an enhanced survey program that—

(1) Includes oversight of the program by the Coast Guard, the vessel's flag

administration, an authorized classification society as described in § 157.04 of this part, or a licensed professional engineer;

(2) Has the frequency of survey which is no less than the inspections required by 46 CFR subpart 31.10;

(3) Has survey scope and recordkeeping requirements that are comparable to the requirements of paragraph (a)(1) of this section; and

(4) Includes keeping a copy of the most recent survey on board the vessel or, upon request by the Coast Guard, making the surveys available within 24 hours for examination.

[CGD 91–045, 61 FR 39789, July 30, 1996]

§ 157.435 Vital systems surveys.

(a) A tank vessel owner or operator shall ensure that surveys of the following systems are conducted:

(1) *Cargo systems.* The survey must include the examination and testing of the items listed in chapters 6, 7, and 10 of the International Safety Guide for Oil Tankers and Terminals, if applicable, prior to cargo transfer operations.

(2) *Mooring systems.* The survey must include a visual examination of the emergency towline, the anchor releasing mechanism, and mooring lines prior to entering the port or place of destination, if weather permits, or prior to getting underway.

(b) Surveys must be conducted by company management personnel, company designated individuals, or vessel officers knowledgeable about the equipment operating parameters and having the authority, capability, and responsibility to initiate corrective action when the equipment is not functioning properly.

(c) The results of the survey required in paragraph (a) of this section, including the material condition of each system, must be recorded in the tank vessel's deck log or other onboard documentation.

[CGD 91–045, 61 FR 39789, July 30, 1996; 61 FR 41685, Aug. 9, 1996]

§ 157.440 Autopilot alarm or indicator.

(a) A tankship owner or operator shall ensure that each installed autopilot unit without automatic manual override has an audible and visual alarm, which is distinct from other required bridge alarms, that will activate if the helm is manually moved while the autopilot is engaged.

(b) A tank barge owner or operator shall ensure that each autopilot unit without automatic manual override installed on the primary towing vessel has a means to clearly indicate the autopilot status and warns personnel of the requirement to disengage the autopilot if positive rudder control is needed.

[CGD 91–045, 61 FR 39790, July 30, 1996]

§ 157.445 Maneuvering performance capability.

(a) A tankship owner or operator shall ensure that maneuvering tests in accordance with IMO Resolution A.751(18), sections 1.2, 2.3–2.4, 3–4.2, and 5 (with Explanatory Notes in MSC/Circ.644) have been conducted by July 29, 1997. Completion of maneuvering performance tests must be shown by—

(1) For a foreign flag tankship, a letter from the flag administration or an authorized classification society, as described in § 157.04 of this part, stating the requirements in paragraph (a) of this section have been met; or

(2) For a U.S. flag tankship, results from the vessel owner confirming the completion of the tests or a letter from an authorized classification society, as described in § 157.04 of this part, stating the requirements in paragraph (a) of this section have been met.

(b) If a tankship undergoes a major conversion or alteration affecting the control systems, control surfaces, propulsion system, or other areas which may be expected to alter maneuvering performance, the tankship owner or operator shall ensure that new maneuvering tests are conducted as required by paragraph (a) of this section.

(c) If a tankship is one of a class of vessels with identical propulsion, steering, hydrodynamic, and other relevant design characteristics, maneuvering performance test results for any tankship in the class may be used to satisfy the requirements of paragraph (a) of this section.

(d) The tankship owner or operator shall ensure that the performance test results, recorded in the format of Appendix 6 of the Explanatory Notes in

MSC/Circ.644, are prominently displayed in the wheelhouse.

(e) Prior to entering the port or place of destination and prior to getting underway, the tankship master shall discuss the results of the performance tests with the pilot while reviewing the anticipated transit and the possible impact of the tankship's maneuvering capability on the transit.

[CGD 91–045, 61 FR 39790, July 30, 1996; 61 FR 41685, Aug. 9, 1996]

§ 157.450 Maneuvering and vessel status information.

A tankship owner, master, or operator shall comply with IMO Resolution A.601(15), Annex sections 1.1, 2.3, 3.1, and 3.2, with appendices.

[CGD 91–045, 61 FR 39790, July 30, 1996]

§ 157.455 Minimum under-keel clearance.

(a) The owner or operator of a tankship, that is not fitted with a double bottom that covers the entire cargo tank length, shall provide the tankship master with written under-keel clearance guidance that includes—

(1) Factors to consider when calculating the ship's deepest navigational draft;

(2) Factors to consider when calculating the anticipated controlling depth;

(3) Consideration of weather or environmental conditions; and

(4) Conditions which mandate when the tankship owner or operator shall be contacted prior to port entry or getting underway; if no such conditions exist, the guidance must contain a statement to that effect.

(b) Prior to entering the port or place of destination and prior to getting underway, the master of a tankship that is not fitted with the double bottom that covers the entire cargo tank length shall plan the ship's passage using guidance issued under paragraph (a) of this section and estimate the anticipated under-keel clearance. The tankship master and the pilot shall discuss the ship's planned transit including the anticipated under-keel clearance. An entry must be made in the tankship's official log or in other onboard documentation reflecting discussion of the ship's anticipated passage.

(c) The owner or operator of a tank barge, that is not fitted with a double bottom that covers the entire cargo tank length, shall not permit the barge to be towed unless the primary towing vessel master or operator has been provided with written under-keel clearance guidance that includes—

(1) Factors to consider when calculating the tank barge's deepest navigational draft;

(2) Factors to consider when calculating the anticipated controlling depth;

(3) Consideration of weather or environmental conditions; and

(4) Conditions which mandate when the tank barge owner or operator shall be contacted prior to port entry or getting underway; if no such conditions exist, the guidance must contain a statement to that effect.

[CGD 91–045, 62 FR 49608, Sept. 23, 1997]

§ 157.460 Additional operational requirements for tank barges.

(a) *Emergency steering capability*. The owner or operator of each tank barge shall not permit the barge to be towed unless, by November 27, 1997, the primary towing vessel has—

(1) A steering gear system with a main power unit, an alternative power unit, and two remote steering gear control systems, except that separate steering wheels or steering levers are not required. The steering gear control systems must be arranged so that if the system in operation fails, the other system can be brought into immediate operation from a position on the navigating bridge; or

(2) Twin screw propulsion with separate control systems for each propeller.

(b) *Fendering system*. An owner or operator of a tank barge shall not permit the barge to be towed unless the primary towing vessel and any fleeting or assist towing vessels have a fendering system that is of substantial size and composition to prevent metal to metal contact between the towing vessel and the barge during maneuvering operations.

[CGD 91–045, 61 FR 39790, July 30, 1996; 61 FR 41685, Aug. 9, 1996]

Subpart H—Interim Measures for Certain Tank Vessels Without Double Hulls Carrying Animal Fat or Vegetable Oil

SOURCE; CGD 91–045, 61 FR 39791, July 30, 1996, unless otherwise noted.

§ 157.500 Purpose and applicability.

(a) The purpose of this subpart is to establish mandatory safety and operational requirements to reduce environmental damage resulting from the discharge of animal fat or vegetable oil.

(b) This subpart applies to each tank vessel specified in § 157.01 of this part that—

(1) Is 5,000 gross tons or more;

(2) Carries animal fat or vegetable oil in bulk as cargo or cargo residue; and

(3) Is not equipped with a double hull meeting § 157.10d of this part, or an equivalent to the requirements of § 157.10d, but required to be equipped with a double hull at a date set forth in 46 U.S.C. 3703a (b)(3) and (c)(3).

§ 157.510 Operational measures.

An owner or operator of a tank vessel that carries animal fat or vegetable oil in bulk as cargo or cargo residue shall comply with the requirements in all sections of subpart G of this part.

Subpart I—Interim Measures for Certain Tank Vessels Without Double Hulls Carrying Other Non–Petroleum Oil

SOURCE; CGD 91–045, 61 FR 39791, July 30, 1996, unless otherwise noted.

§ 157.600 Purpose and applicability.

(a) The purpose of this subpart is to establish mandatory safety and operational requirements to reduce environmental damage resulting from the discharge of other non-petroleum oil.

(b) This subpart applies to each tank vessel specified in § 157.01 of this part that—

(1) Is 5,000 gross tons or more;

(2) Carries other non-petroleum oil in bulk as cargo or cargo residue; and

(3) Is not equipped with a double hull meeting § 157.10d of this part, or an equivalent to the requirements of § 157.10d, but required to be equipped with a double hull at a date set forth in 46 U.S.C. 3703a (b)(3) and (c)(3).

§ 157.610 Operational measures.

An owner or operator of a tank vessel that carries other non-petroleum oil in bulk as cargo or cargo residue shall comply with the requirements in all sections of subpart G of this part.

APPENDICES TO PART 157

APPENDIX A—DAMAGE ASSUMPTIONS, HYPOTHETICAL OUTFLOWS, AND CARGO TANK SIZE AND ARRANGEMENTS

1. *Source.* The procedures for the damage assumption calculations contained in this Appendix conform to Regulations 22, 23, and 24 of Annex I of the International Convention for the Prevention of the Pollution from Ships, 1973, done at London, November 2, 1973.

2. *Assumptions.* For the purpose of calculating hypothetical outflow from tank vessels, three dimensions of the extent of damage of a parallelepiped on the side and bottom of the vessel are assumed.

(a) For side damage, the conditions are as follows:

Damage	Conditions
(1) Longitudinal extent l_c	$\frac{1}{3} L^{2/3}$ or 14.5 m, whichever is less.
(2) Transverse extent (t_c) (inboard from the vessel's side at right angles to the centerline at the level corresponding to the assigned summer freeboard).	B —or 11.5 m, whichever is 5 less.
(3) Vertical extent (v_c)	From the base line upwards without limit.

(b) For bottom damage, two conditions to be applied individually to the stated portions of the vessel, as follows:

Damage	Conditions	
	For 0.3L from the forward perpendicular of ship	Any other part of ship
(1) Longitudinal extent (ls)	L/10	L/10 or 5 meters, whichever is less.
(2) Transverse extent (ts)	B/6 or 10 meters, whichever is less but not less than 5 meters.	5 meters.

Damage	Conditions	
	For 0.3L from the forward perpendicular of ship	Any other part of ship
(3) Vertical extent from the base line (v_s).	*B*/15 or 6 meters, whichever is less	*B*/15 or 6 meters, whichever is less.

3. *Hypothetical Outflow of Oil.* (a) The hypothetical outflow of oil in the case of side damage (O_c) and bottom damage (O_s) is calculated by the following formula with respect to compartments breached by damage to all conceivable locations along the length of the vessel to the extent as defined in section 2 of this Appendix.

(1) For side damages: Formula

$O_c = \Sigma W_i + \Sigma K_i C_i$

(2) For bottom damage: Formula II

$O_s = \frac{1}{3}(\Sigma Z_i W_i + \Sigma Z_i C_i)$

Where:

W_i=Volume of a wing tank assumed to be breached by the damage as specified in section 2 of this Appendix; W_i for a segregated ballast tank may be taken equal to zero;

C_i=Volume of a center tank assumed to be breached by the damage as specified in section 2 of this Appendix; C_i for a segregated ballast tank may be taken equal to zero;

$$K_i = 1 - \frac{b_i}{t_c}$$

when b_i is equal to or greater than t_c, K_i is equal to zero;

$$Z_i = 1 - \frac{h_i}{v_s}$$

when h_i is equal to or greater than v_s, Z_i is equal to zero;

b_i=Minimum width of wing tank under consideration measured inboard from the vessel's side at right angles to the centerline at the level corresponding to the assigned summer freeboard; and

h_i=Minimum depth of the double bottom under consideration; where no double bottom is fitted, h_i is equal to zero.

(b) If a void space or segregated ballast tank of a length less than l_c is located between wing oil tanks, O_c in formula I of this section may be calculated on the basis of volume W_i being the actual volume of one such tank (where they are of equal capacity) or the smaller of the two tanks (if they differ in capacity), adjacent to such space, multiplied by S_i as defined below and taking for all other wing tanks involved in such a collision the value of the actual full volume.

$$S_i = 1 - \frac{l_i}{l_c}$$

Where l_i=length of void space or segregated ballast tank under consideration.

(c) Credit is only given in respect to double bottom tanks which are either empty or carrying clean water when cargo is carried in the tanks above.

(1) If the double bottom does not extend for the full length and width of the tank involved, the double bottom is considered nonexistent and the volume of the tanks above the area of the bottom damage must be included in formula II of this section even if the tank is not considered breached because of the installation of such a partial double bottom.

(2) Suction wells may be neglected in the determination of the value h_i if such wells are not excessive in area and extend below the tank for a minimum distance and in no case more than half the height of the double bottom. If the depth of such a well exceeds half the height of the double bottom, h_i is taken equal to the double bottom height minus the well height.

(d) In the case where bottom damage simultaneously involves four center tanks, the value of O_s may be calculated according to formula III as follows:

$O_s = \frac{1}{4}(\Sigma Z_i W_i + \Sigma Z_i C_i)$

(e) Credit for reduced oil outflow from bottom damage may be applied to formula III for an installed emergency high suction cargo transfer system that:

(1) transfers within two hours oil equal to one half of the volume of the largest tank involved;

(2) has sufficient ballast or cargo tankage available to receive the transferred oil; and

(3) has the high suction piping installed at a height not less than the vertical extent of bottom damage (v_s).

4. *Allowable volumes of cargo tanks.*

(a) The allowable volume of a wing cargo tank (VOL_w) is equal to seventy-five percent of O_A. In a segregated ballast tank vessel VOL_w may equal O_A for a wing cargo oil tank located between two segregated ballast tanks each of length greater than l_c and width greater than t_c.

(b) The allowable volume of a center cargo tank (VOL_c) is 50,000 cubic meters.

5. *Allowable length of cargo tanks.*

The length of each cargo tank (*1* a) must not exceed 10 meters or the distance calculated from (a), (b), or (c), as appropriate, whichever is greater:

(a) Where no longitudinal bulkhead is provided inside the cargo tanks: *1* a=[0.5(bi/B)+0.1] L, but not to exceed 0.2L.

(b) Where a centerline longitudinal bulkhead is provided inside the cargo tanks: *1* a=[0.25(bi/B)+0.15] L, but not to exceed 0.2L.

(c) Where two or more longitudinal bulkheads are provided inside the cargo tanks:

(1) For wing cargo tanks: *1* a = 0.2L.

(2) For center cargo tanks:

(i) If (bi/B) is equal to or greater than 0.2, *1* a = 0.2L.

(ii) If (bi/B) is less than 0.2:

(A) Where no centerline longitudinal bulkhead is provided, *1* a = [0.5(bi/B) + 0.1] L.

(B) Where a centerline longitudinal bulkhead is provided, *1* a = [0.25(bi/B) + 0.15] L.

(d) ''bi'' is the minimum distance from the ship's side to the outer longitudinal bulkhead of the tank in question, measured inboard at right angles to the centerline at the level corresponding to the assigned summer freeboard.

[CGD 74–32, 40 FR 48283, Oct. 14, 1975, as amended by CGD 74–32, 40 FR 49328, Oct. 22, 1975; CGD 90–051, 57 FR 36245, Aug. 12, 1992]

APPENDIX B—SUBDIVISION AND STABILITY ASSUMPTIONS

1. *Source.* The procedures for the loading assumption calculations contained in this Appendix conform to Regulation 25 of Annex I of the International Convention for the Prevention of the Pollution from Ships, 1973, done at London, November 2, 1973.

2. *Loading Assumptions.* For the purpose of calculating subdivision and damage stability for a tank vessel, the operating drafts must reflect actual partial or full load conditions consistent with trim and strength of the vessel. Ballast conditions need not be considered if the tank vessel is not carrying oil in cargo tanks excluding oily residues. Loading condition must reflect the specific gravities of the cargo.

3. *Damage Assumptions.*

(a) Damage is applied to all conceivable locations along the length of the vessel as follows:

(1) For a vessel of more than 225 meters in length, anywhere in the vessel's length.

(2) For a vessel of more than 150 meters, but not exceeding 225 meters in length, anywhere in the vessel's length except where the after or forward bulkhead bounding a machinery space located aft is involved in the damage assumption. The machinery space is calculated as a single floodable compartment.

(3) For a vessel 150 meters or less in length, anywhere in the vessel's length between adjacent transverse bulkheads except the machinery space.

(b) The extent and the character of the assumed side or bottom damage, as defined in section 2 of Appendix A of this part, must be applied except longitudinal bottom damage within 0.3L from the forward perpendicular must be assumed to be the same as that for side damage. If any damage of lesser extent results in a more severe condition, such damage must be assumed.

(c) If damage involves transverse bulkheads as specified in paragraphs (a)(1) and (2) of this section, transverse watertight bulkheads must be spaced at least at a distance equal to the longitudinal extent of the assumed damage specified in paragraph (b) of this section in order to be considered effective. Where transverse bulkheads are spaced at a lesser distance, one or more of these bulkheads within such extent of damage must be assumed as nonexistent for the purpose of determining flooded compartments.

(d) If the damages between adjacent transverse watertight bulkheads is within the definition contained in paragraph (a)(3) of this section, no main transverse bulkhead or a transverse bulkhead bounding side tanks or double bottom tanks is to be assumed damaged, unless:

(1) the spacing of the adjacent bulkheads is less than the longitudinal extent of assumed damage defined in paragraph (b) of this section; or

(2) there is a step or a recess in a transverse bulkhead of more than 3.05 meters in length, located within the extent of penetrations of assumed damage. The step formed by the after peak bulkhead and after peak tank top is not regarded as a step for these calculations.

(e) If pipes, ducts, or tunnels are situated within the assumed extent of damage, there must be arrangements so that progressive flooding may not thereby extend to compartments other than those assumed to be floodable for each case of damage.

4. *Characteristic and Condition Assumption for Calculations.*

(a) Account must be taken of any empty or partially filled tanks, the specific gravity of cargoes carried, and any outflow of liquids from damaged compartments.

(b) The permeabilities are assumed as follows:

Intended space use	Permeability
Stores	0.60
Accommodation	0.95
Machinery	0.85
Voids	0.95
Consumable liquids	[1] 0 or 0.95
Other liquids	[2] 10 or 0.95

[1] Whichever results in the more severe requirements.

[2] The permeability of partially filled compartments must be consistent with actual density and the amount of liquid carried.

(c) The buoyancy of any superstructure directly above the side damage is to be disregarded. The unflooded parts of superstructures beyond the extent of damage may be taken into consideration if they are separated from the damaged space by watertight bulkheads and no progressive flooding of these intact spaces takes place. Class I doors

are allowed in watertight bulkheads in the superstructure.

(d) The free surface effect is to be calculated:

(1) at an angle of heel of 5 degrees for each individual compartment; or

(2) by assessing the shift of liquids by moment of transference calculations.

(e) In calculating the effect of free surfaces of consumable liquids, it is to be assumed that, for each type of liquid, at least one transverse pair or a single centerline tank has a free surface and the tank or combination of tanks to be taken into account is to be those where the effect of free surface is the greatest.

APPENDIX C—PROCEDURE FOR DETERMINING DISTRIBUTION OF SEGREGATED BALLAST TANKS TO PROVIDE PROTECTION AGAINST OIL OUTFLOW IN THE EVENT OF GROUNDING, RAMMING, OR COLLISION

1. *Source.* The procedure for determining the distribution of segregated ballast tanks contained in this appendix conforms to Regulation 13E of the MARPOL Protocol.

2. *Procedure.* Protective location of segregated ballast tanks, voids, and other spaces that do not carry cargo which are within the cargo tank length is determined from the following:

$$\Sigma PA_c + \Sigma PA_s = J[L_t(B + 2D)]$$

Where:

PA_c=the side shell area in square meters based on projected molded dimensions for each segregated ballast tank, void, or other space that does not carry cargo and which complies with paragraph 2(b) of this appendix;

PA_s=the bottom shell area in square meters based on projected molded dimensions for each segregated ballast tank, void, or other space that does not carry cargo and which complies with paragraph 2(b) of this appendix;

L_t=the length in meters between the forward and after extremities of the cargo tanks;

B=the maximum breadth of the ship in meters measured amidship to the molded line of the frame; and

D=the molded depth in meters measured vertically from the top of the keel plate to the top of the freeboard deck beam at the side amidships. In tank vessels having rounded gunwales, the molded depth is measured from the top of the keel plate to the point of intersection of the molded lines of the deck and side shell plating, the lines being extended as though the gunwale were of angular design.

(a) *Method of determining a value for J.*

(1) For tank vessels for 20,000 DWT, J=0.45.

(2) For tank vessels of 200,000 DWT or more:

(i) J=0.30; or

(ii) J=the greater of 0.20, or

$$0.30 - \left[a - \frac{(O_c + O_s)}{40_A} \right] ,$$

where:

a=0.25 for tank vessels of 200,000 DWT.

a=0.40 for tank vessels of 300,000 DWT.

a=0.50 for tank vessels of 420,000 DWT.

For values of DWT between 200,000 and 300,000 DWT, 300,000 and 420,000 DWT, and greater than 420,000 DWT, the value of ''a'' is determined by linear interpolation.

O_c = as calculated in Appendix A of this part.

O_s = as calculated in Appendix A of this part.

O_A = the allowable oil outflow meeting §157.19(b)(1) of this part.

(3) For values of DWT between 20,000 and 200,000 DWT, the value of ''J'' is determined by linear interpolation between 0.45 and 0.30 respectively.

(b) PA_c and PA_s: *Criteria for determining the segregated ballast tanks, voids, and other spaces that do not carry cargo.*

The following criteria are to be met for a segregated ballast tank, void, or space that does not carry cargo, to be used in determining PA_c and PA_s:

(1) The minimum width of each wing tank or space, either of which extends for the full depth of the vessel's side or from the main deck to the top of the double bottoms is 2 meters or more. The width is measured inboard from the vessel's side shell plating at right angles to the vessel's center line. If a wing tank or space has a width anywhere within it that is less than 2 meters, that wing tank or space is not used when calculating PA_c.

(2) The minimum vertical depth of each double bottom tank or space is B/15 or 2 meters, whichever is smaller. If a double bottom tank or space has a depth less than B/15 or 2 meters, whichever is smaller, anywhere within it, the double bottom or space is not to be used when calculating PA_s.

(3) The minimum width of a wing tank or space is not measured in the way of—

(i) the turn of the bilge area; or

(ii) a rounded gunwale area.

(4) The minimum depth of a double bottom tank or space is not measured in the way of the turn of the bilge area.

[CGD 77–058b, 45 FR 43716, June 30, 1980]

APPENDIX D—EXAMPLE OF A PROCEDURE FOR DEDICATED CLEAN BALLAST TANKS OPERATIONS

1. *Source.* The example procedure for dedicated clean ballast tanks operation contained in this appendix conforms to the

Annex of Resolution 14 of the MARPOL Protocol.

2. *Example Procedure.* Dedicated clean ballast tanks operational procedure:

(a) Before arrival at the loading port:

(1) Transfer all remaining slop to a cargo tank.

(2) Ensure that the pumping and piping designated for clean ballast operation have been properly cleaned to accommodate simultaneous discharge of clean ballast while loading.

(3) Ensure that all valves to the slop tank and the cargo tanks are closed.

(4) Perform visual inspection of all dedicated clean ballast tanks and their contents, if any, for signs of contamination.

(5) Discharge a sufficient amount of clean ballast water to ensure that remaining ballast water and cargo to be loaded will not exceed the permissible deadweight or draft. Leave a sufficient amount of water for flushing the piping, and as a minimum, a quantity equal to 10 times the volume of the affected piping.

(6) Ensure that all valves to the dedicated clean ballast tanks are closed.

(7) If no further ballast discharge is anticipated, drain the clean ballast piping.

(b) In the loading port:

(1) Perform normal loading operations of cargo tanks.

(2) Ensure sufficient slop tank capacity is available for subsequent reception of cargo pump and piping flushings.

(3) When applicable, discharge remaining clean ballast before entire piping system is used for loading. Leave the required minimum quantity of flushing water in ballast tanks.

(4) Ensure that all valves to the dedicated clean ballast tanks are closed.

(5) Ensure that all valves to the cargo tank are closed upon completion of loading.

(c) After departure from the loading port:

(1) Flush appropriate pumping and piping with sufficient water from dedicated clean ballast tanks into a slop tank.

(2) Ensure that valves to the slop tank are closed before pumping the remaining clean water overboard and monitoring oil content of the water.

(3) Ensure that all valves in the dedicated clean ballast tanks are closed.

(d) Before arrival at the unloading port:

(1) Ensure that all valves to the slop tank and cargo tanks are closed.

(2) Recheck that the pumping and piping designated for clean ballast operation have been properly cleaned.

(3) Ballast through clean cargo pumps and piping, considering the port's draft requirements.

(4) Ensure that all valves in the dedicated clean ballast tanks are closed.

(e) In the unloading port:

(1) Allocate pumping and piping intended for clean ballast operation.

(2) Perform normal unloading operations.

(3) As soon as draft conditions permit, complete ballasting to departure conditions.

(4) Ensure that all valves to the dedicated clean ballast tanks are closed.

(5) Complete unloading.

(f) After departure from the unloading port:

(1) Flush pumps and piping servicing the dedicated clean ballast tanks into the slop tank.

(2) Top up dedicated clean ballast tanks.

(3) Process the slop tank content in accordance with load on top (LOT) procedures.

[CGD 77–058b, 45 FR 43717, June 30, 1980]

APPENDIX E—SPECIFICATIONS FOR THE DESIGN, INSTALLATION AND OPERATION OF A PART FLOW SYSTEM FOR CONTROL OF OVERBOARD DISCHARGES

Source. Appendix 2 to Annex 5 of IMO's Marine Environment Protection Committee document MEPC/Circ. 97. Paragraphs 1 and 2 are printed for information. Paragraphs 3, 4, and 5 are incorporated into §§ 157.11 and 157.37.

Note: Information in square brackets on Figure 1 has been added by the Coast Guard for clarity.

1 *Purpose*

The purpose of these Specifications is to provide specific design criteria and installation and operational requirements for the part flow system referred to in Regulation 18(6)(e) of Annex I of the International Convention for the Prevention of Pollution from Ships, 1973 as modified by the Protocol of 1978 relating thereto.

2 *Application*

2.1 Existing oil tankers may, in accordance with Regulation 18(6)(e) of Annex I of MARPOL 73/78, discharge dirty ballast water and oil contaminated water from cargo tank areas below the waterline, provided part of the flow is led through permanent piping to a readily accessible location on the upper deck or above where it may be visually observed during the discharge operation and provided that the arrangements comply with the requirements established by the Administration and which shall at least contain all the provisions of these Specifications.

2.2 The part flow concept is based on the principle that the observation of a representative part flow of the overboard effluent is equivalent to observing the entire effluent stream. These specifications provide the details of the design installation, and operation of a part flow system.

3 *General Provisions*

3.1 The part flow system shall be so fitted that it can effectively provide a representative sample of the overboard effluent for visual display under all normal operating conditions.

3.2 The part flow system is in many respects similar to the sampling system for an oil discharge monitoring and control system but shall have pumping and piping arrangements separate from such a system, or combined equivalent arrangements acceptable to the Administration.

3.3 The display of the part flow shall be arranged in a sheltered and readily accessible location on the upper deck or above, approved by the Administration (e.g. the entrance to the pump room). Regard should be given to effective communication between the location of the part flow display and the discharge control position.

3.4 Samples shall be taken from relevant sections of the overboard discharge piping and be passed to the display arrangement through a permanent piping system.

3.5 The part flow system shall include the following components:

.1 Sampling probes;

.2 Sample water piping system;

.3 Sample feed pump(s);

.4 Display arrangement;

.5 Sample discharge arrangement; and, subject to the diameter of the sample piping:

.6 Flushing arrangement.

.3.6 The part flow system shall comply with the applicable safety requirements.

4 *System Arrangement*

4.1 Sampling points.

4.1.1 Sampling point locations:

.1 Sampling points shall be so located that relevant samples can be obtained of the effluent being discharged through outlets below the waterline which are being used for operational discharges.

.2 Sampling points shall as far as practicable be located in pipe sections where a turbulent flow is normally encountered.

.3 Sampling points shall as far as practicable be arranged in accessible locations in vertical sections of the discharge piping.

4.1.2 Sampling probes:

.1 Sampling probes shall be arranged to protrude into the pipe a distance of about one fourth of the pipe diameter.

.2 Sampling probes shall be arranged for easy withdrawal for cleaning.

.3 The part flow system shall have a stop valve fitted adjacent to each probe, except that were the probe is mounted in a cargo line, two stop valves shall be fitted in series, in the sample line.

.4 Sampling probes should be of corrosion resistant and oil resistant material, of adequate strength, properly jointed and supported.

.5 Sampling probes shall have a shape that is not prone to becoming clogged by particle contaminants and should not generate high hydrodynamic pressures at the sampling probe tip. Figure 1 is an example of one suitable shape of a sampling probe.

.6 Sampling probes shall have the same nominal bore as the sample piping.

4.2 Sample piping:

.1 The sample piping shall be arranged as straight as possible between the sampling points and the display arrangement. Sharp bends and pockets where settled oil or sediment may accumulate should be avoided.

.2 The sample piping shall be so arranged that sample water is conveyed to the display arrangement within 20 seconds. The flow velocity in the piping should not be less than 2 metres per second.

.3 The diameter of the piping shall not be less than 40 millimetres if no fixed flushing arrangement is provided and shall not be less than 25 millimetres if a pressurized flushing arrangement as detailed in paragraph 4.4 is installed.

.4 The sample piping should be of corrosion-resistant and oil-resistant material, of adequate strength, properly jointed and supported.

.5 Where several sampling points are installed the piping shall be connected to a valve chest at the suction side of the sample feed pump.

4.3 Sample feed pump:

.1 The sample feed pump capacity shall be suitable to allow the flow rate of the sample water to comply with 4.2.2.

4.4 Flushing arrangement:

.1 If the diameter of sample piping is less than 40 millimetres, a fixed connexion from a pressurized sea or fresh water piping system shall be installed to enable flushing of the sample piping system.

4.5 Display arrangement:

.1 The display arrangement shall consist of a display chamber provided with a sight glass. The chamber should be of a size that will allow a free fall stream of the sample water to be clearly visible over a length of at least 200 millimetres. The Administration may approve equivalent arrangements.

.2 The display arrangement shall incorporate valves and piping in order to allow a part of the sample water to bypass the display chamber to obtain a laminar flow for display in the chamber.

.3 The display arrangement shall be designed to be easily opened and cleaned.

.4 The internal of the display chamber shall be white except for the background wall which shall be so coloured in order to facilitate the observation of any change in the quality of the sample water.

.5 The lower part of the display chamber shall be shaped as a funnel for collection of the sample water.

.6 A test cock for taking a grab sample shall be provided in order that a sample of the water can be examined independent of that in the chamber.

.7 The display arrangement shall be adequately lighted to facilitate visual observation of the sample water.

4.6 Sample discharge arrangement:

.1 The sample water leaving the display chamber shall be routed to the sea or to a slop tank through piping of adequate diameter.

5 *Operation*

5.1 When a discharge of dirty ballast water or other oil contaminated water from the cargo tank area is taking place through an outlet below the waterline, the part flow system shall provide sample water from the relevant discharge outlet at all times.

5.2 The sample water should be observed particularly during those phases of the discharge operation when the greatest possibility of oil contamination occurs. The discharge shall be stopped whenever any traces of oil are visible in the flow and when the oil content meter reading indicates oil content exceeds permissible limits.

5.3 On those systems that are fitted with flushing arrangements, the sample piping should be flushed after contamination has been observed and additionally it is recommended that the sample piping be flushed after each period of usage.

5.4 The ship's cargo and ballast handling manuals and, where applicable, those manuals required for crude oil washing systems or dedicated clean ballast tanks operation shall clearly describe the use of the part flow system in conjunction with the ballast discharge and the slop tank decanting procedures.

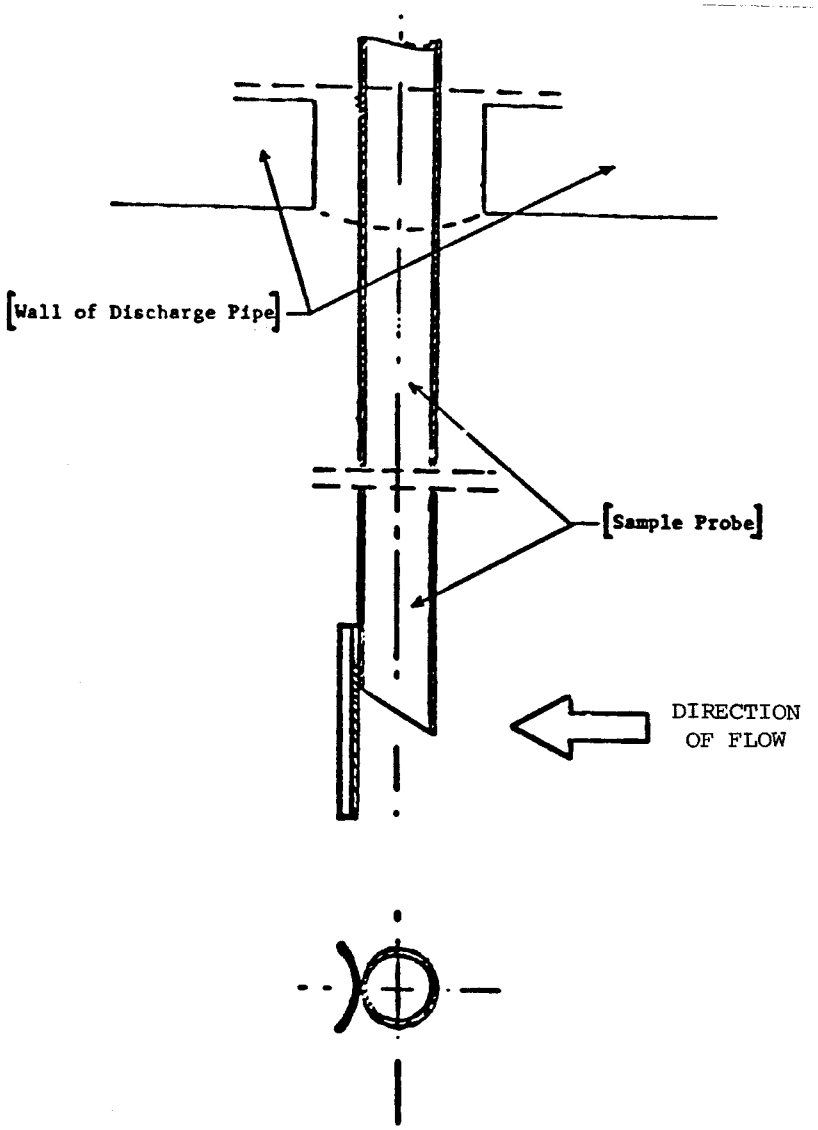

FIGURE 1

SAMPLING PROBE FOR A PART FLOW DISPLAY SYSTEM

[CGD 75–124a, 48 FR 45721, Oct. 6, 1983]

APPENDIX F—GUIDELINES AND SPECIFICATIONS FOR OIL DISCHARGE MONITORING AND CONTROL SYSTEMS FOR TANKERS

Source. IMO Resolution A.496(XII). Paragraphs 1, 2, 3, and 7 are printed for information. Paragraphs 4, 5, and 6 are incorporated into §157.12.

Mandatory Language. Wherever the word ''should'' is used in this appendix, substitute the word ''shall''. Compliance with these provisions is mandatory.

Note. Numbered footnotes have been added by the Coast Guard for clarity. Footnotes in the original text have been inserted parenthetically in the text and are identified by an asterisk.

1 *Purpose*

1.1 The purpose of these Guidelines and Specifications is:

.1 To provide a uniform interpretation of the requirements of Regulation 15(3)(a) of Annex I to the MARPOL 73/78 Convention(*1*), and

.2 To assist Administrations in determining appropriate design, construction and operational parameters for oil discharge monitoring and control systems when such systems are fitted in ships flying the flag of their State.

2 *Background*

2.1 The requirements of Annex I to the MARPOL 73/78 Convention relating to oil content monitoring of oil tanker ballast and tank washing water are contained in Regulation 15(3)(a), which stipulates that oil tankers of 150 tons gross tonnage and above shall be equipped with an approved oil discharge monitoring and control system and that the system shall record continuously:

.1 The discharge of oil in litres per nautical mile and total quantity of oil discharge; or

.2 In lieu of the total quantity of oil discharged, the oil content of the effluent and rate of discharge.

In both cases the record shall be ''identifiable as to time and date'' and shall be kept for at least three years.

2.2 Regulation 15 also stipulates that the system shall come into operation when there is any discharge of effluent into the sea and shall be such as will ensure that any discharge of oily mixture is automatically stopped when the instantaneous rate of discharge of oil exceeds that permitted by Regulation 9(1)(a). In existing oil tankers the stopping of the discharge may be performed manually and the rate of discharge may be estimated from the pump characteristics.

2.3 A test and performance specification for the basic oil content meter, indicating oil content in ppm, has been adopted by Resolution A.393(X).

2.4 Resolution A.445(XI) recognizes the need for early installation of oil discharge monitoring and control systems in order that operational experience can be gained. That resolution further invites the Marine Environment Protection Committee (MEPC) to develop guidelines for the progressive installation of oil discharge monitoring and control systems for new and existing oil tankers.

3 *Application*

3.1 An oil discharge monitoring and control system, approved by the Administration, shall be fitted in every oil tanker of 150 tons gross tonnage and above, and shall be fitted in:

.1 New (*as defined in Regulation 1(6))(*2*) tankers, on the date of entry into force of the Convention;

.2 Existing tankers, within three years of the date of entry into force of the Convention.

3.2 Existing tankers operating with a tank cleaning procedure using crude oil washing in accordance with Regulation 13(8) or with dedicated clean ballast tanks in accordance with Regulation 13(9) must fit an oil content meter not later than the first scheduled shipyard visit after entry into force of the Convention.

3.3 An incentive scheme to encourage the early installation of oil discharge monitoring and control systems (Resolution A.445(XI)) has been developed which allows different requirements depending on the date of installation of the system and the size and building date of the oil tanker. The terms used in the description of the various requirements are defined in section 4 below.

4 *Definitions*

4.1 ''Oil discharge monitoring and control system''

4.1.1 Oil discharge monitoring and control system is a general term covering any one of the units referred to in paragraphs 4.2, 4.3, and 4.4.

4.2 ''Control unit''

4.2.1 A control unit is a system which receives automatic signals of:

.1 Oil content;

.2 Flow rate of discharge;

.3 Ship's speed;

.4 Date and time (G.M.T.); and

.5 Discharge valve position (open or closed).

4.2.2 The unit shall make automatic recordings of:

.1 Instantaneous rate of discharge of oil;

.2 Total quantity of oil discharged;

.3 Date and time (G.M.T.);

.4 Discharge valve position (open or closed);

.5 Alarm condition;

.6 Failure (i.e. no flow, fault etc.); and

.7 Override action (i.e. manual override, flushing, calibration etc.).

4.2.3 The unit shall be fitted with a starting interlock and discharge valve control capability. The unit shall meet the specifications contained in the relevant paragraphs of section 6.

4.3 ''Computing unit''.

4.3.1 A computing unit is a system which receives automatic signals of:

.1 Oil content;

.2 Date and time (G.M.T.);

.3 Discharge valve activation;

.4 Flow rate of discharge; and

.5 Ship's speed in knots.

The flow rate and ship's speed may be manually inserted into the unit.

4.3.2 The unit shall make automatic recordings of:

.1 Instantaneous rate of discharge of oil;

.2 Total quantity of oil discharged;

.3 Date and time (G.M.T.);

.4 Discharge valve position (open or closed);

.5 Alarm condition;

.6 Failure (i.e. no flow, fault etc.);

.7 Override action;

.8 Manual input (i.e. speed, flow); and

.9 Oil content if the flow rate has been manually inserted.

4.3.3 Unless explicitly stated in the Implementation Requirements (see section 5 below) the unit need not be fitted with a starting interlock or discharge valve control capability.

4.3.4 The unit shall meet the specifications contained in the relevant paragraphs of section 6.

4.4 ''Calculating unit''.

4.4.1 A calculating unit is a system which received automatic signals of:

.1 Oil content;

.2 Flow rate of discharge; and

.3 Ship's speed.

The flow rate and ship's speed may be manually inserted into the unit.

4.4.2 The unit shall make an automatic recording of:

.1 Oil content, unless the oil content meter is provided with a recorder.

4.4.3 The unit shall display:

.1 Instantaneous rate of discharge of oil;

.2 Total quantity of oil discharged, unless permitted to be calculated manually.

4.4.4 The time and date, instantaneous rate of discharge of oil and, the total quantity of oil discharged may be recorded manually.

4.4.5 The unit need not be fitted with a starting interlock nor discharge valve control capability.

4.4.6 The unit shall meet the specifications contained in the relevant paragraphs of section 6.

4.5 ''Starting interlock'' is an automatic device which prevents the initiation of the opening of the discharge valve before the monitoring and control system is fully operational when use of this system is required by the Convention.

4.6 The ''discharge valve control'' is an automatic device which initiates the sequence to stop the overboard discharge.

5 *Implementation Requirements*

5.1 To assist in the implementation of Resolution A.445(XI), an implementation scheme has been developed by the MEPC which provides slightly different requirements for oil discharge monitoring and control systems depending on size and building date of the oil tanker. The scheme also allows for different requirements, depending on the installation date of the system.

5.2 Under the implementation scheme contained in paragraph 5.4 oil tankers of 150 tons gross tonnage and above have been arranged into five categories. Each category of oil tanker shall be fitted with an oil discharge monitoring and control system as set out below. The definitions given in section 4 should be consulted for a description of the different systems.

5.3 The implementation scheme set out in paragraph 5.4 gives details, with reference to paragraph 4, of the minimum equipment required to comply with this scheme. Where it is expedient to fit equipment of a higher category than required no objection shall be raised to this arrangement.

5.4 Implementation scheme:

5.4.1 Category I—

.1 An oil tanker of this category is of 4,000 tons deadweight and above and is a ''new ship'' as defined in Regulation 1(6) of Annex I of MARPOL 73/78 and the oil discharge monitoring and control system is installed on or after 1 June 1982.

.2 This category of ship shall be fitted with a control unit as defined under paragraph 4.2.

5.4.2 Category II—

.1 An oil tanker of this category is of 4,000 tons deadweight and above and is a ''new ship'' as defined in Regulation 1(6) of Annex I of MARPOL 73/78 and the oil discharge monitoring and control system is installed before 1 June 1982.

.2 This category of ship shall be fitted with a computing unit as defined under paragraph 4.3.

.3 The system shall also be fitted with a starting interlock and a discharge valve control.

5.4.3 Category III—

.1 An oil tanker of this category is of 150 tons gross tonnage and above, but less than 4,000 tons deadweight and is a ''new ship'' as defined in Regulation 1(6) of Annex I of MARPOL 73/78.

.2 This category of ship shall be fitted with a computing unit as defined under paragraph 4.3.

.3 No automatic devices are required to activate overboard discharge valve closure, neither is a starting interlock required.

5.4.4 Category IV(a)—

.1 An oil tanker of this category is of 20,000 tons deadweight and above and is an ''existing ship'' as defined in Regulation 1(7) of Annex I of MARPOL 73/78 and the oil discharge monitoring and control system is installed between one year and three years after the date of entry into force of MARPOL 73/78.

.2 This category of ship shall be fitted with a computing unit as defined under paragraph 4.3.

.3 The system shall also be fitted with a starting interlock, but need not be fitted with a discharge valve control.

.4 For oil tankers within this category up to and including 100,000 tons deadweight, where the overboard discharge has local manual control or where control is provided by means of extension rods, Administrations may grant waivers or exemptions from the requirement to fit a starting interlock system (*3*).

5.4.5 Category IV(b)—

.1 An oil tanker of this category is of 20,000 tons deadweight and above and is an ''existing ship'' as defined in Regulation 1(7) of Annex I of MARPOL 73/78 and the oil discharge monitoring and control system is installed not later than one year after the date of entry into force of MARPOL 73/78.

.2 This category of ship shall be fitted with a computing unit as defined under paragraph 4.3.

.3 No automatic devices are required to activate overboard discharge valve closure, neither is a starting interlock required.

5.4.6 Category V(a)—

.1 An oil tanker of this category is of 150 tons gross tonnage and above but less than 20,000 tons deadweight and is an ''existing ship'' as defined in Regulation 1(7) of Annex I of MARPOL 73/78 and the oil discharge monitoring and control system is installed between one year and three years after the entry into force of MARPOL 73/78.

.2 This category of ship shall be fitted with a calculating unit as defined under paragraph 4.4.

.3 No automatic devices are required to activate overboard discharge valve closure, neither is a starting interlock required.

5.4.7 Category V(b)—

.1 An oil tanker of this category is of 150 tons gross tonnage and above but less than 20,000 tons deadweight and is an ''existing ship'' as defined in Regulation 1(7) of Annex I to MARPOL 73/78 and the oil discharge monitoring and control system is installed not later than one year after the entry into force of MARPOL 73/78.

.2 This category of ship shall be fitted with a calculating unit as defined under paragraph 4.4. However, the total quantity of oil discharged may be computed manually.

.3 No automatic devices are required to activate overboard discharge valve closure, neither is a starting interlock required.

5.5 Shown at the Appendix is a summary, in tabular form, of the implementation requirements (*4*).

6 *Technical Specifications*

6.1 Oil discharge monitoring and control system:

6.1.1 The oil discharge monitoring and control system shall be so fitted that it can effectively monitor and control the discharge of any effluent into the sea through those overboard discharge outlets permitted by Regulation 18(2) which in the opinion of the Administration are necessary to fulfill the operational requirements of the tanker (*5*). The system should additionally cover:

.1 The gravitational discharge of ballast water from cargo tanks; and

.2 The midship cargo manifold arrangement when used to meet the requirements of Regulation 18.

6.1.2 The discharge of dirty ballast water or oil contaminated water into the sea through outlets which are not controlled by the monitoring and control system is an infringement of the Convention (*6*).

6.1.3 The system should function effectively, according to the criteria shown below, under all environmental conditions which vessels are normally assumed to encounter, and shall be designed and constructed to withstand the environmental conditions as specified in paragraph 6.1.6 of these Guidelines and Specifications:

.1 Except where manual operation of the system is permitted the system shall be so designed that no ballast discharge can take place unless the monitor is in the normal operating mode and the relevant sampling point has been connected to the monitor.

.2 Preferably the system should have a minimum number of discharge outlets and sampling points so arranged that discharge can take place via only one sampling point at a time.

.3 Where it is intended that more than one line is used for simultaneous discharge purposes, one oil content meter (*7*), together with a flow meter, shall be installed per discharge line. These instruments shall be connected to a common processing unit.

.4 In order to avoid alarms due to short term high oil concentration signals (spikes) causing indications of high instantaneous rates of discharge, the short term high ppm signal may be suppressed for a maximum of 10 seconds by employing a delay relay. Alternatively, the instantaneous rate of discharge may be the average during the preceding 20

seconds or less as computed from instantaneous ppm values produced by the oil content meter with intervals of a maximum of 5 seconds.

6.1.4 The system should comprise the following:

.1 An oil content meter to measure the oil content of the effluent in parts per million. This meter shall be approved in accordance with the provisions contained in resolution A.393(X)(*8*) and certified to take into account the range of cargoes carried;

.2 A flow rate system to indicate the quantity of effluent being discharged in a unit of time (see also paragraphs 6.3.7 and 6.3.8);

.3 A vessel speed indicating device; to give the vessel's speed in knots (see also paragraphs 6.4.2 and 6.4.3);

.4 A sampling system to convey a representative sample of the effluent to the oil content meter;

.5 A control section which includes:

.5.1 A processor, which accepts signals of oil content, flow rate and the vessel's speed and converts them into litres per nautical mile and the total quantity of oil discharged (see also paragraph 6.5.3);

.5.2 A transmitting device to provide alarms and, where required, command signals to the discharge control arrangement;

.5.3 A recording device to provide, where required, a continuous record of the effluent discharge;

.5.4 A manual override system to be used in the event of failure of the monitoring and control system; and

.5.5 Where required a transmitting device to provide signals to a starting interlock preventing the discharge of effluent before the oil content meter is fully operative.

6.1.5 The electrical components of the system installed in a hazardous area of a vessel shall meet the appropriate safety requirements (*As contained in the provisions of IEC Publication 92 or its equivalent.)(*9*) provided for these areas.

6.1.6 The control section of an oil discharge monitoring and control system shall be capable of operating satisfactorily under the following environmental conditions:

.1 *Ambient air temperature:* 0° C to 55° C in enclosed spaces; −25° C to 55° C on open decks

.2 *Vibration:* 2.0 Hz to 13.2 Hz, with displacement amplitude of ±1.0 mm 13.2 Hz to 80.0 Hz, with an acceleration amplitude of ±0.7 g

.3 *Voltage variations for alternating current:* permanent variation of ±10%

.4 *Inclination:* inclination at angles of up to 22.5° in any place from the normal operational position

6.2 Sampling system:

6.2.1 Sampling points should be so located that relevant samples can be obtained from those outlets that are used for operational discharges in accordance with paragraph 6.1.1. The sampling probes located in the overboard discharge lines and the piping system connecting the sampling probes to the oil content meter should meet the following requirements:

.1 The piping and probes shall be of corrosion-resistant and oil-resistant material, of adequate strength, properly jointed and supported;

.2 The system shall have a stop valve fitted adjacent to each probe, except that where the probe is mounted in a cargo line, e.g. to the midship cargo manifold arrangement, two stop valves shall be fitted, in series, in the sample line;

.3 Sampling probes should be arranged for easy withdrawal and should as far as practicable be mounted at an accessible location in a vertical section of the discharge line. If a sampling point has to be made in a horizontal section then suitable arrangements should be made to obtain representative samples. Sampling probes should normally penetrate inside the discharge pipe to a distance of one quarter the diameter of that pipe;

.4 Means shall be provided for cleaning the probes and piping system by the provision of permanent clean water flushing arrangements or some other equivalent method, especially in the case of probes mounted in a cargo line. The design of the probes and piping should be such as to minimize their clogging by oil, oily residue and other matter;

.5 The velocity of the fluid in the piping shall be such that, taking into consideration the length of the piping, the overall response time should be as short as possible between an alteration in the mixture being pumped and the alteration in the meter reading and in any case not more than 40 seconds;

.6 The location of sampling probes in relation to any point of flow diversion to a slop tank shall be selected with regard to the need for sampling the oily water in the recirculation mode;

.7 The arrangements for driving the sampling pump or any other pumps such as those provided for washing windows shall have regard to the safety requirements of the space in which the pump is located;

.8 The flushing arrangements should be such that where necessary they can be utilized for stabilizing the oil content meter and for correcting zero setting;

.9 Sample water when returned to the slop tank shall not be allowed to free fall into the tank.

6.3 Flow rate indicating system:

6.3.1 A flow meter for measuring the rate of discharge should be installed in a vertical section of a discharge line or in any other section of discharge line as appropriate, so as to be always filled with the liquid.

6.3.2 A flow meter should employ an operating principle which is suitable for shipboard use and, where relevant, can be used in large diameter pipes.

6.3.3 A flow meter should be suitable for the full range of flow rates that may be encountered during normal operation. Alternatively, arrangements such as the use of two flow meters of different ranges or a restriction of the operational flow rate range may be necessary to meet this requirement.

6.3.4 The flow meter, as installed, should have an accuracy of ±15 percent, or better, of the instantaneous rate throughout the operating range.

6.3.5 Any component part of the flow meter in contact with the effluent discharge including associated piping, if fitted, shall be of corrosion-resistant and oil-resistant material of adequate strength.

6.3.6 The design of the flow metering arrangements shall have regard to the safety requirements of the space in which such metering arrangements are located.

6.3.7 In ships fitted with a computing unit the flow rate may be determined from the pump characteristics and the data manually inserted into the unit.

6.3.8 In ships fitted with a calculating unit the flow rate may be manually inserted into the unit. The flow rate is to be estimated from the best available source e.g. pump characteristics, speed of pump(s), ullages or knowledge of pumping rates for particular tanks on the ship.

6.3.9 In oil tankers where the gravitational discharges of ballast water from the cargo tanks is an established practice, in accordance with Regulation 18(6)(d), means, such as calibration curves, shall be provided to estimate the flow rate of discharge.

6.4 Vessel's speed indicating system:

6.4.1 The automatic speed signal required for the control unit shall be obtained from the vessel's speed indicating device (*See ''Recommendation on Performance Standards for Devices to Indicate Speed and Distance (Annex to Resolution A.478(XII)).) by means of a repeater signal. This information shall be readily available in a form that can be accepted by a processor. The speed information used may be either speed over the ground or speed through the water depending upon the speed measuring equipment installed on board.

6.4.2 In ships where a computing unit is required the vessel's speed may be manually inserted into the unit. This data shall be obtained from the ship's log or from an indicating device which transmits signals which need not be in a form which can be accepted by a computer system.

6.4.3 The vessel's speed on ships required to install a calculating unit may be obtained from the ship's log or from the navigation charts and shall be estimated from the most reliable source.

6.5 Processor and transmitting device:

6.5.1 The processor should receive, at time intervals not exceeding 5 seconds, signals from the oil content meter, the flow rate measuring system, and the vessel's speed indicator and automatically compute the following:

.1 Instantaneous rate of discharge of oil in litres per nautical mile; and

.2 Total quantity of oil discharged per voyage in cubic meters or litres.

6.5.2 When the calculations of the processor exceed the limits imposed by Regulation 9(1)(a) (iv) and (v) (*10*) the transmitting device will provide alarms and, in new ships, it will also provide command signals to the discharge valve control which will cause the discharge of effluent into the sea to stop.

6.5.3 In existing ships fitted with a calculating unit where the unit is installed early, the total quantity of oil discharged may be computed manually.

6.6 Recording devices:

6.6.1 Control Unit—

.1 The recording device for a control unit should include a digital printer or an analogue recorder or the combination of both or a recorded visible display. The record shall be identifiable as to the time and date and shall be kept for at least three years (*11*).

.2 The data to be automatically recorded shall include at least the following items:

.2.1 Instantaneous rate of discharge of oil (litres per nautical mile);

.2.2 The total quantity of oil discharged (litres);

.2.3 Time and date (G.m.t.);

.2.4 The discharge valve position (open or closed);

.2.5 Alarm condition;

.2.6 Failure (i.e. no flow, fault, etc.); and

.2.7 Override action (i.e. manual override, flushing, calibrating, etc.).

6.6.2 Computing Unit—

.1 The recording device for a computing unit should include a digital printer or an analogue recorder or the combination of both or a recorded visible display. The record shall be identifiable as to the time and date and shall be kept for at least three years (*11*). Manual input information should be identifiable on the record.

.2 The data to be automatically recorded shall include at least the following items:

.2.1 Instantaneous rate of discharge of oil (litres per nautical mile);

.2.2 The total quantity of oil discharged (litres);

.2.3 Time and date (G.m.t.);

.2.4 Manual input information;

.2.5 The valve position (open or closed);

.2.6 Alarm condition;

.2.7 Failure (i.e. no flow, fault, etc.);

.2.8 Override action (i.e. manual override, flushing, calibration, etc.); and

.2.9 Oil content if flow rate is manually inserted.

6.6.3 Calculating Unit—

.1 An automatic recording device is not required for a calculating unit, but, where fitted, the recording device should include a digital printer or an analogue recorder or the combination of both or a recorded acceptable visible display. The record shall be identifiable as to time and date, which may be entered manually, and shall be kept for at least three years (*11*).

.2 The data to be automatically recorded on the above-mentioned recording device shall include at least the following item: Oil content in ppm, unless the oil content meter is provided with a recorder.

6.6.4 Recording for digital printers.

Occasions of recordings. Data required in paragraphs 6.6.1.2, 6.6.2.2, and 6.6.3.2 of these Specifications shall be printed out with the following minimum frequency:

.1 When the discharge is started;

.2 When the discharge is stopped;

.3 At intervals of not more than 10 minutes;

.4 When an alarm condition is developed;

.5 When normal conditions are restored;

.6 At the change of valve order or valve position;

.7 When introducing input data;

.8 Whenever the computed rate of discharge varies by 10 litres/nautical mile, unless an equivalent trend-indicating arrangement is provided;

.9 When selecting zero setting or calibration mode; and

.10 On manual command.

6.6.5 Recording for analogue recorders.

Data required in paragraphs 6.6.1.2, 6.6.2.2 and 6.6.3.2 of these Specifications should be continuously recorded in such a way as would satisfy the following requirements:

.1 The chart speed should be indicated. If the speed is controllable, the recorder shall be provided with a marker to identify the speed of the chart paper; and

.2 Means shall be provided to enable the chart paper to be interpreted as to time, date and readings after it has been removed from the recorder.

6.7 Data display.

6.7.1 The current data shall be visibly displayed.

6.7.2 The recording device and the data display should be located in a position easily accessible to the person in charge of the operation of discharging the effluent overboard.

6.8 Manually operated alternatives.

6.8.1 The alternative means and information for use in case of any one failure in the system should be as follows:

.1 Oil Content meter: visual observation of the surface of the water (*12*);

.2 Sampling pump: visual observation of the surface of the water;

.3 Flow meter: pump characteristics, etc.;

.4 Vessel's speed indicating device: main engine R.P.M., etc.;

.5 Processor: manual calculation and manual recording; and

.6 Discharge valve control: manual operation of pumps and valves.

6.9 Alarm conditions resulting in the stopping of discharge.

6.9.1 Audio-visual alarms shall be initiated for any of the following conditions:

.1 Whenever the instantaneous rate of discharge of oil exceeds 60 litres per nautical mile;

.2 When the total quantity of oil discharged reaches the allowable limit prescribed by the provisions of the relevant Regulations;

.3 Failure of the system's operation, such as:

.3.1 Power failure;

.3.2 Loss of sample;

.3.3 Failure of the measuring or recording system; or

.3.4 When the input signal of the sensors exceeds the effective capacity of the system.

6.10 Location of alarm indicator

6.10.1 The alarm indicator of the system shall be installed in the cargo control room where provided and/or other places where it will attract immediate attention and action.

7 Equipment, Operation and Maintenance Manuals

7.1 Administrations shall ensure that approved equipment, operational and/or maintenance manuals for the various items comprising the oil discharge monitoring and control systems are on board the vessel. These manuals shall cover the oil content meter, control, computing or calculating unit, flow meter and ship's speed indicator, where required.

FOOTNOTES: (ADDED BY THE U.S. COAST GUARD FOR CLARITY.)

(*1*) The ''MARPOL 73/78 Convention'' is referred to as the MARPOL Protocol'' in 33 CFR, Part 157.

(*2*) Also defined in §157.03(i).

(*3*) The Coast Guard has determined that a starting interlock system is not required on Category IV(a) vessels that are 100,000 DWT or less.

(*4*) The Coast Guard is not publishing this Appendix.

(*5*) Section 157.11(b)(2) requires at least one discharge point.

(*6*) Section 157.37(a) requires all overboard discharges of oily mixtures to be monitored.

(*7*) The ''oil content meter'' is referred to as a ''cargo monitor'' in 33 CFR Part 157 and 46 CFR Subpart 162.050.

(*8*) Approval under 46 CFR Subpart 162.050 constitutes compliance with this resolution.

Section 157.12(b) requires that monitors installed on U.S. vessels must be approved under 46 CFR Subpart 162.050.

(*9*) U.S. vessels are required to meet 46 CFR Parts 110–113, Electrical Engineering Regulations, which also constitutes compliance with IEC Publication 92.

(*10*) Sections 157.37(a) (3) and (4) impose the same limits. These limits relate to instantaneous rate and total quantity of oil discharged.

(*11*) Section 157.37(d) also requires that discharge data be kept for three years.

(*12*) Section 157.37(a)(6) also requires visual observation of the discharge if the system fails.

[CGD 75–124a, 48 FR 45723, Oct. 6, 1983]

APPENDIX G—TIMETABLES FOR APPLICATION OF DOUBLE HULL REQUIREMENTS

1. *Source.* These timetables conform to 46 U.S.C. 3703a(c).

2. *Timetables.*

(a) In this section, the age of a vessel is determined from the later of the date on which the vessel is—

(1) Delivered after original construction;

(2) Delivered after completion of a major conversion; or

(3) Qualified for documentation under section 4136 of the Revised Statutes of the United States (46 U.S.C. app. 14).

(b) A vessel of less than 5,000 gross tons for which a building contract or contract for major conversion was placed before June 30, 1990, and that is delivered under that contract before January 1, 1994, and a vessel that had its appraised salvage value determined by the Coast Guard before June 30, 1990, and that qualifies for documentation under section 4136 of the Revised Statutes of the United States (46 U.S.C. app. 14) before January 1, 1994, may not operate in the navigable waters or the Exclusive Economic Zone of the United States after January 1, 2015, unless equipped with a double hull or with a double containment system determined by the Coast Guard to be as effective as a double hull for the prevention of a discharge of oil.

(c) A vessel for which a building contract or contract for major conversion was placed before June 30, 1990, and that is delivered under that contract before January 1, 1994, and a vessel that had its appraised salvage determined by the Coast Guard before June 30, 1990, and that qualifies for documentation under 46 CFR subpart 67.19 before January 1, 1994, may not operate in the navigable waters or Exclusive Economic Zone of the United States unless equipped with a double hull—

(1) In the case of vessel of at least 5,000 gross tons but less than 15,000 gross tons—

(i) After January 1, 1995, if the vessel is 40 years old or older and has a single hull, or is 45 years old or older and has a double bottom or double sides;

(ii) After January 1, 1996, if the vessel is 39 years old or older and has a single hull, or is 44 years old or older and has a double bottom or double sides;

(iii) After January 1, 1997, if the vessel is 38 years old or older and has a single hull, or is 43 years old or older and has a double bottom or double sides;

(iv) After Janaury 1, 1998, is the vessel is 37 years old or older and has a single hull, or is 42 years old or older and has a double bottom or double sides;

(v) After January 1, 1999, if the vessel is 36 years old or older and has a single hull, or is 41 years old or older and has a double bottom or double sides;

(vi) After January 1, 2000, if the vessel is 35 years old or older and has a single hull, or is 40 years old or older and has a double bottom or double sides;

(vii) After January 1, 2005, if the vessel is 25 years old or older and has a single hull, or is 30 years old or older and has a double bottom or double sides;

(2) In the case of a vessel of at least 15,000 gross tons but less than 30,000 gross tons—

(i) After January 1, 1995, if the vessel is 40 years old or older and has a single hull, or is 45 years old or older and has a double bottom or double sides;

(ii) After January 1, 1996, if the vessel is 38 years old or older and has a single hull, or is 43 years old or older and has a double bottom or double sides;

(iii) After January 1, 1997, if the vessel is 36 years old or older and has a single hull, or is 41 years old or older and has a double bottom or double side;

(iv) After January 1, 1998, if the vessel is 34 years old or older and has a single hull, or is 39 years old or older and has a double bottom or double sides;

(v) After January 1, 1999, if the vessel is 32 years old or older and has a single hull, or is 37 years old or older and has a double bottom or double sides;

(vi) After January 1, 2000, if the vessel is 30 years old or older and has a single hull, or is 35 years old or older and has a double bottom or double sides;

(vii) After January 1, 2001, if the vessel is 29 years old or older and has a single hull, or is 34 years old or older and has a double bottom or double sides;

(viii) After January 1, 2002, if the vessel is 28 years old or older and has a single hull, or is 33 years old or older and has a double bottom or double sides;

(ix) After January 1, 2003, if the vessel is 27 years old or older and has a single hull, or is 32 years old or older and has a double bottom or double sides;

(x) After Janaury 1, 2004, if the vessel is 26 years old or older and has a single hull, or is 31 years old or older and has a double bottom or double sides;

(xi) After January 1, 2005, if the vessel is 25 years old or older and has a single hull, or is 30 years old or older and has a double bottom or double sides; and

(3) In the case of a vessel of at least 30,000 gross tons—

(i) After January 1, 1995, if the vessel is 28 years old or older and has a single hull, or is 33 years old or older and has a double bottom or double sides;

(ii) After January 1, 1996, if the vessel is 27 years old or older and has a single hull, or is 32 years old or older and has a double bottom or double sides;

(iii) After January 1, 1997, if the vessel is 26 years old or older and has a single hull, or is 31 years old or older and has a double bottom or double sides;

(iv) After January 1, 1998, if the vessel is 25 years old or older and has a single hull, or is 30 years old or older and has a double bottom or double sides;

(v) After January 1, 1999, if the vessel is 24 years old or older and has a single hull, or is 29 years old or older and has a double bottom or double sides;

(vi) After January 1, 2000, if the vessel is 23 years old or older and has a single hull, or is 28 years old or older and has a double bottom or double sides;

(d) Except as provided in paragraph (b) of this section—

(1) A vessel that has a single hull may not operate after January 1, 2010, and

(2) A vessel that has a double bottom or double sides may not operate after January 1, 2015.

NOTE: Double sides and double bottoms must meet the relevant requirements in §157.10d (c) or (d), as appropriate. A vessel will be considered to have a single hull if it has neither double sides nor a double bottom that meets the relevant requirements in §157.10d(c) or §157.10d(d).

[CGD 90–051, 57 FR 36245, Aug. 12, 1992]

PART 158—RECEPTION FACILITIES FOR OIL, NOXIOUS LIQUID SUBSTANCES, AND GARBAGE

Subpart A—General

Sec.
158.100 Purpose.
158.110 Applicability.
158.115 Penalties for violation.
158.120 Definitions and acronyms.
158.130 Delegations.
158.133 Which ports and terminals must provide reception facilities?
158.135 Which ports and terminals must have Certificates of Adequacy?
158.140 Applying for a Certificate of Adequacy.
158.150 Waivers and alternatives.
158.160 Issuance and termination of a Certificate of Adequacy.
158.163 Reception facility operations.
158.165 Certificate of Adequacy: Change of information.
158.167 Reporting inadequate reception facilities.

SUSPENSION, REVOCATION, AND APPEALS

158.170 Grounds for suspension.
158.172 Notification of a suspension order.
158.174 Suspension of a Certificate of Adequacy: Procedure.
158.176 Effect of suspension of a Certificate of Adequacy.
158.178 Actions during a suspension.
158.180 Certificate of Adequacy: Procedures after revocation or the part no longer applies.
158.190 Appeals.

Subpart B—Criteria for Reception Facilities: Residues and Mixtures Containing Oil

158.200 General.
158.210 Ports and terminals loading crude oil.
158.220 Ports and terminals loading more than 1,000 metric tons of oil other than crude oil or bunker oil.
158.230 Ports and terminals other than ports and terminals under §§158.210, 158.220, and 158.240.
158.240 Ship repair yards.
158.250 Standard discharge connection.

Subpart C—Criteria for Certifying That a Port's or Terminal's Facilities Are Adequate for Receiving NLS Residue

158.300 Purpose.
158.310 Reception facilities: General.
158.320 Reception facilities: Capacity, and exceptions.
158.330 Ports and terminals: Equipment.

Subpart D—Criteria for Adequacy of Reception Facilities: Garbage

158.400 Purpose.
158.410 Reception facilities: General.
158.420 Reception facilities: Capacity and exceptions.

Subpart E—Port and Terminal Operations

158.500 Draining cargo area and piping systems.
158.520 Following the instruction manual.

AUTHORITY: 33 U.S.C. 1903(b); 49 CFR 1.46.

Subpart A—General

SOURCE: CGD 85–010, 52 FR 7761, Mar. 12, 1987, unless otherwise noted.

§ 158.100 Purpose.

This part establishes the following:

(a) Criteria for determining the adequacy of reception facilities.

(b) Procedures for certifying that reception facilities are adequate for receiving—

(1) Residues and mixtures containing oil from oceangoing tankers and any other oceangoing ships of 400 gross tons or more;

(2) NLS residue from oceangoing ships; or

(3) Garbage from ships.

(c) Standards for ports and terminals to reduce NLS residue.

[CGD 85–010, 52 FR 7761, Mar. 12, 1987, as amended by CGD 88–002, 54 FR 18407, Apr. 28, 1989]

§ 158.110 Applicability.

(a) Subparts B, C, and E apply to each port and each terminal located in the United States or subject to the jurisdiction of the United States that is—

(1) Used by oceangoing tankers, or any other oceangoing ships of 400 gross tons or more, carrying residues and mixtures containing oil, or by oceangoing ships to transfer NLSs, except those ports and terminals that are used only by—

(i) Tank barges that are not configured and are not equipped to ballast or wash cargo tanks while proceeding enroute;

(ii) Ships carrying NLS operating under waivers under 46 CFR 153.491(b); or

(2) A ship repair yard that services oceangoing ships carrying oil or NLS residue.

(b) Subpart D applies to each port and terminal located in the United States or subject to the jurisdiction of the United States.

[CGD 88–002, 54 FR 18407, Apr. 28, 1989]

§ 158.115 Penalties for violation.

(a) A person who violates MARPOL 73/78, the Act, or the regulations of this part is liable for a civil penalty not to exceed $25,000 for each violation, as provided by 33 U.S.C. 1908(b)(1). Each day of a continuing violation constitutes a separate violation.

(b) A person who makes a false, fictitious statement or fraudulent representation in any matter in which a statement or representation is required to be made to the Coast Guard under MARPOL 73/78, the Act, or the regulations of this part, is liable for a civil penalty not to exceed $5,000 for each statement or representation, as provided by 33 U.S.C. 1908(b)(2).

(c) A person who knowingly violates MARPOL 73/78, the Act, or the regulations of this part is liable for a fine for each violation, of not more than $50,000 dollars, or imprisonment for not more than 5 years, or both, as provided by 33 U.S.C. 1908(a).

[CGD 88–002, 54 FR 18407, Apr. 28, 1989]

§ 158.120 Definitions and acronyms.

As used in this part:

Bunker oil means oil loaded into bunker tanks for use as fuel.

Captain of the Port (COTP) means the Coast Guard officer commanding a Captain of the Port Zone described in Part 3 of this chapter.

Certificate of Adequacy means a document issued by the Coast Guard or other authorized agency that certifies a port or terminal meets the requirements of this part with respect to reception facilities required under the Act and MARPOL 73/78, and has Form A, Form B, or Form C attached.

Clean ballast has the same meaning as in § 157.03(e) of this chapter.

Commandant means Commandant, U.S. Coast Guard.

Commercial fishing facility means docks, piers, processing houses, or other facilities which receive commercial fishery products from ships.

Daily vessel average means the total number of oceangoing tankers, or any other oceangoing ships of 400 gross tons or more, carrying residues and mixtures containing oil, serviced over a typical continuous 12 month period, divided by 365.

Form A means the application for a reception facility Certificate of Adequacy for oil, Coast Guard form USCG–CG–5401A (9–85).

Form B means the application for a reception facility Certificate of Adequacy for NLS, Coast Guard form USCG–CG–5401B(2–87).

Form C means the application for a Certificate of Adequacy for a Reception Facility for Garbage, Coast Guard form USCG–CG–5401C. ''Garbage'' means all kinds of victual, domestic, and operational waste, excluding fresh fish and parts thereof, generated during the normal operation of the ship and liable to be disposed of continuously or periodically, except dishwater, graywater, and those substances that are defined or listed in other annexes to MARPOL 73/78. ''Harmful substance'' means any substance which, if introduced into the sea, is liable to create hazards to human health, harm living resources and marine life, damage amenities or interfere with other legitimate uses of the sea, and includes any substance subject to control by MARPOL 73/78.

High viscosity NLS includes Category A NLSs having a viscosity of at least 25 mPa.s at 20 °C and of at least 25 mPa.s at the time they are unloaded, high viscosity Category B NLSs, and high viscosity Category C NLSs.

High viscosity Category B NLS means any Category B NLS having a viscosity of at least 25 mPa.s at 20 °C and at least 25 mPa.s at the time it is unloaded.

High viscosity Category C NLS means any Category C NLS having a viscosity of at least 60 mPa.s at 20 °C and at least 60 mPa.s at the time it is unloaded.

MARPOL Protocol (MARPOL 73/78) stands for the International Convention for the Prevention of Pollution from Ships, 1973, (done at London, November 2, 1973), as modified by the Protocol of 1978 relating to the International Convention for the Prevention of Pollution from Ships 1973 (done at London on February 17, 1978), as amended, (1985).

Medical waste means isolation wastes, infectious agents, human blood and blood products, pathological wastes, sharps, body parts, contaminated bedding, surgical wastes and potentially contaminated laboratory wastes, dialysis wastes, and such additional medical items as prescribed by the Administrator of the EPA by regulation. ''Mineral and oil industry shorebase'' means a place or onshore structure or facility which is a base of operations for ships serving the mineral and oil industry.

Noxious liquid substance (NLS) means—

(1) Each substance listed in § 151.47 or § 151.49 of this chapter;

(2) Each substance having an ''A'', ''B'', ''C'', or ''D'' beside it's name in the column headed ''Pollution Category'' in Table 1 of 46 CFR Part 153; and

(3) Each substance that is identified as an NLS in a written permission issued under 46 CFR 153.900(d).

Oceangoing ship means a ship that—

(1) Is operated under the authority of the United States and engages in international voyages;

(2) Is operated under the authority of the United States and is certificated for ocean service;

(3) Is operated under the authority of the United States and is certificated for coastwise service beyond three miles from land;

(4) Is operated under the authority of the United States and operates at any time seaward of the outermost boundary of the territorial sea of the United States as defined in § 2.05 of this chapter; or

(5) Is operated under the authority of a country other than the United States.

NOTE: A Canadian or U.S. ship being operated exclusively on the Great Lakes of North America or their connecting and tributary waters, or exclusively on the internal waters of the United States and Canada, is not an ''oceangoing ship.''

Oil means petroleum in any form including crude oil, fuel oil, sludge, oil refuse, and refined products (other than petrochemicals that are subject to the provisions of Annex II of MARPOL 73/78) and without limiting the generality of the forgoing, includes the substances listed in Appendix I of Annex I of MARPOL 73/78.

Person has the same meaning as in § 151.05(n) of this chapter.

Person in charge means an owner, operator, or a person authorized to act on behalf of a port or terminal.

NOTE: The ''person in charge'' under this part is not necessarily the same person as the ''person in charge'' referred to in Parts

151, 154, 155, and 156 of this chapter (as defined in § 154.105 of this chapter.)

Prewash means a tank washing operation that meets the procedure in 46 CFR 153.1120.

Port means—

(1) A group of terminals that combines to act as a unit and be considered a port for the purposes of this part;

(2) A port authority or other organization that chooses to be considered a port for the purposes of this part; or

(3) A place or facility that has been specifically designated as a port by the COTP.

Reception facility means anything capable of receiving shipboard residues and mixtures containing oil or NLS residue, or receiving garbage, including, but not limited to—

(1) Fixed piping that conveys residues and mixtures from the ship to a storage or treatment system;

(2) Tank barges, railroad cars, tank trucks, or other mobile facilities;

(3) Containers or other receptacles that are used as temporary storage for garbage; or

(4) Any combination of fixed and mobile facilities. ''Recreational boating facility'' means a facility that is capable of providing wharfage or other services for 10 or more recreational vessels. It includes, but is not limited to, marinas, boatyards, and yacht clubs, but does not include a place or facility containing only an unattended launching ramp.

Regulated NLS cargo includes each Category A or high viscosity or solidifying Category B or C NLS cargo listed in Table 1 of 46 CFR Part 153 that contains a reference to § 153.908(a) or § 153.908(b) in the ''Special Requirements'' column of that table and is unloaded at the port or terminal within a typical continuous 12 month period either before or after application is made for a Certificate of Adequacy.

Residues and mixtures containing NLSs (NLS residue) means—

(1) Any Category A, B, C, or D NLS cargo retained on the ship because it fails to meet consignee specifications;

(2) Any part of a Category A, B, C or D NLS cargo remaining on the ship after the NLS is discharged to the consignee, including but not limited to puddles on the tank bottom and in sumps, clingage in the tanks, and substance remaining in the pipes; or

(3) Any material contaminated with Category A, B, C, or D NLS cargo, including but not limited to bilge slops, ballast, hose drip pan contents, and tank wash water.

Segregated ballast has the same meaning as contained in § 157.03(r) of this chapter.

Ship means a vessel of any type whatsoever, operating in the marine environment. This includes hydrofoils, air cushion vehicles, submersibles, floating craft whether self-propelled or not, and fixed or floating drilling rigs or other platforms.

Solidifying NLS means a Category A, B, or C NLS that has a melting point—

(1) Greater than 0 °C but less than 15 °C and a temperature, measured under the procedure in 46 CFR 153.908(d), that is less than 5 °C above its melting point at the time it is unloaded; or

(2) 15 °C or greater and has a temperature, measured under the procedure in 46 CFR 153.908(d), that is less than 10 °C above its melting point at the time it is unloaded.

Tank barge has the same meaning as contained in 46 CFR 30.10–65.

Tanker means a ship constructed or adapted primarily to carry oil in bulk in the cargo spaces.

Terminal means an onshore facility or an offshore structure located in the navigable waters of the United States or subject to the jurisdiction of the United States and used, or intended to be used, as a port or facility for the transfer or other handling of a harmful substance.

NOTE: The Coast Guard interprets commercial fishing facilities, recreational boating facilities, and mineral and oil industry shorebases to be terminals for the purposes of Annex V of MARPOL 73/78, since these facilities normally provide wharfage and other services, including garbage handling, for ships. ''The Act'' means the Act to Prevent Pollution from Ships, as amended, (33 U.S.C. 1901–1911).

The Act means the Act to Prevent Pollution from Ships (94 Stat. 2297, 33 U.S.C. 1901 *et seq*).

[CGD 85–010, 52 FR 7761, Mar. 12, 1987, as amended by CGD 88–002, 54 FR 18407, Apr. 28, 1989]

§ 158.130 Delegations.

Each COTP is delegated the authority to—

(a) Conduct inspections at ports and terminals required to have reception facilities under this part;

(b) Issue Certificates of Adequacy;

(c) Grant waivers under § 158.150;

(d) Designate ports; and

(e) Deny entry of ships to any port or terminal, except when a ship is entering under force majeure, that does not have—

(1) A Certificate of Adequacy if required under § 158.135; or

(2) Reception facilities for garbage required under Subpart D of this part.

[CGD 88–002, 54 FR 18408, Apr. 28, 1989]

§ 158.133 Which ports and terminals must provide reception facilities?

(a) A port or terminal which receives oceangoing tankers, or any other oceangoing ship of 400 gross tons or more, carrying residues and mixtures containing oil, must have a reception facility which meets Subpart B of this part.

(b) A port or terminal which receives oceangoing ships carrying NLSs must have a reception facility which meets Subpart C of this part.

(c) All ports and terminals under the jurisdiction of the United States, including commercial fishing facilities, mineral and oil shorebases, and recreational boating facilities, must have a reception facility which meets Subpart D of this part.

[CGD 88–002, 54 FR 18408, Apr. 28, 1989]

§ 158.135 Which ports and terminals must have Certificates of Adequacy?

To continue to receive ships, a port or terminal must hold one or more Certificates of Adequacy to show compliance with—

(a) Subpart B of this part if it receives oceangoing tankers, or any other oceangoing ship of 400 gross tons or more, carrying residues and mixtures containing oil.

(b) Subpart C of this part if it receives oceangoing ships carrying NLSs.

(c) Subpart D of this part if it receives—

(1) The ships under paragraph (a) or (b) of this section; or

(2) Fishing vessels which offload more than 500,000 pounds of commercial fishery products from all ships during a calendar year.

[CGD 88–002, 54 FR 18408, Apr. 28, 1989]

§ 158.140 Applying for a Certificate of Adequacy.

(a) To continue to receive ships at a port or terminal required by § 158.135 to have a Certificate of Adequacy for its reception facilities, the person in charge must apply to the Coast Guard for a certificate as follows:

(1) Applicants for a Certificate of Adequacy required by § 158.135(a) or (b) must apply to the COTP of the Zone in which the port or terminal is located using Form A or Form B, respectively.

(2) An applicant for a Certificate of Adequacy required by section 158.135(c) must apply on Form C to the COTP of the Zone in which the port or terminal is located.

(b) Applications for Certificates of Adequacy, Forms A, B, or C, may be obtained from the local Coast Guard COTP.

[CGD 88–002, 54 FR 18408, Apr. 28, 1989, as amended by CGD 96–026, 61 FR 33668, June 28, 1996; 61 FR 36629, July 12, 1996]

§ 158.150 Waivers and alternatives.

(a) If the person in charge believes that a requirement in this part is unreasonable or impracticable for the port's or terminal's operations, the person in charge may submit a request for a waiver to the COTP. This application must—

(1) Be in writing; and

(2) Include the—

(i) Reasons why the requirement is unreasonable or impracticable;

(ii) Proposed alternatives that meet MARPOL 73/78; and

(iii) Additional information requested by the COTP.

(b) If the COTP allows the alternative proposed under paragraph (a)(2)(ii) of this section, the waiver—

(1) Is in writing; and

(2) States each alternative that applies and the requirement under this part for which the alternative is substituted.

(c) The person in charge shall ensure that each waiver issued under paragraph (b) of this section is attached to the Certificate of Adequacy issued for the port or terminal.

§ 158.160 Issuance and termination of a Certificate of Adequacy.

(a) After reviewing an application made under § 158.140(a)(1), the COTP determines by inspection the following:

(1) When the application is made on Form A, whether or not the reception facility meets Subpart B of this part.

(2) When the application is made on Form B, whether or not the reception facility and the port, or the reception facility and the terminal, meet Subpart C of this part.

NOTE: If in the instruction manual required by § 158.330(b) there is a certification by a registered professional engineer licensed by a state or the District of Columbia that the backpressure requirements under § 158.330(a) are met, the COTP determines whether or not to accept this finding.

(b) After the inspections under paragraph (a) are conducted, and after consulting with the Administrator of the Environmental Protection Agency (EPA) or his or her designee, the COTP.

(1) Issues a Certificate of Adequacy to the person in charge for the port or terminal; or

(2) Denies the application and informs the person in charge in writing of the reasons for the denial.

(c) After reviewing an application made under § 158.140(a)(2), the COTP——

(1) Issues a Certificate of Adequacy to the person in charge for the port or terminal; or

(2) Denies the application and informs the person in charge in writing of the reasons for the denial.

(d) In order to remain valid, the Certificate of Adequacy must have attached to it any waivers that are granted under § 158.150 when the Certificate of Adequacy is issued.

(e) Each Certificate of Adequacy remains valid until—

(1) Suspended;

(2) Revoked; or

(3) This part no longer applies to the port or terminal.

[CGD 88–002, 54 FR 18408, Apr. 28, 1989, as amended by CGD 96–026, 61 FR 33668, June 28, 1996]

§ 158.163 Reception facility operations.

(a) Each person in charge and each person who is in charge of a reception facility shall ensure that the reception facility does not operate in a manner that violates any requirement under this part.

(b) A copy of the Certificate of Adequacy issued for the port or terminal must be—

(1) At each port and terminal under this part; and

(2) Available for inspection by the COTP and the master, operator, person who is in charge of a ship, or agent for a ship.

(c) Ports and terminals required to have an Operations Manual under this chapter or 46 CFR Chapter 1 must have a copy of the Certificate of Adequacy issued for the port or terminal, including any waivers, attached to that Operations Manual.

[CGD 85–010, 52 FR 7761, Mar. 12, 1987, as amended by CGD 88–002, 54 FR 18409, Apr. 28, 1989]

§ 158.165 Certificate of Adequacy: Change of information.

(a) Except as required in paragraph (b) of this section, the person in charge shall notify the COTP in writing within 10 days after any information required in section 2, 3A, 3G, or 3H, of Form A or section 2, 5A, or 5C of Form B changes.

(b) The person in charge shall notify the COTP in writing within 30 days after any information required in the following is changed:

(1) Form A, sections 1, 3B, 3C, 3E, 3F, 3I, or 3J.

(2) Form B, sections 1, 3, 4, 5B, 5D, 5E, 5F or 5G.

(3) Form C, sections A1, B1, B2, or D4.

(c) The person in charge shall maintain at the port or terminal a copy of the information submitted under paragraphs (a) and (b) of this section, until a corrected Certificate of Adequacy is received from the COTP.

[CGD 85–010, 52 FR 7761, Mar. 12, 1987, as amended by CGD 88–002, 54 FR 18409, Apr. 28, 1989; 55 FR 35988, Sept. 4, 1990]

§ 158.167 Reporting inadequate reception facilities.

Any person may report to the local Coast Guard COTP that reception facilities required by these regulations or MARPOL 73/78 are inadequate. Reports of inadequate reception facilities may be made orally, in writing or by telephone.

[CGD 88–002, 54 FR 18409, Apr. 28, 1989]

SUSPENSION, REVOCATION, AND APPEALS

§ 158.170 Grounds for suspension.

The COTP may suspend a Certificate of Adequacy if—

(a) Deficiencies recur or significantly affect the adequacy of the reception facility;

(b) Continued operations will result in undue delay to ships calling at the port or terminal;

(c) There is a failure to accept NLS residue from a ship after it's cargo tanks are prewashed in accordance with 46 CFR 153.1120; or

(d) There is a substantial threat of discharge of oil or NLS into or upon the navigable waters of the United States or adjoining shorelines.

§ 158.172 Notification of a suspension order.

(a) If the COTP has grounds for an immediate suspension of or is considering suspending a Certificate of Adequacy, the COTP notifies the person in charge of the intended action. Each notification of a suspension order, whether oral or written, includes—

(1) The grounds for the suspension;

(2) The date when the suspension becomes effective; and

(3) Information on how the suspension may be withdrawn, including all corrective actions required.

(b) If the suspension order is made orally, the COTP issues a suspension order in writing within five days after the initial notification.

§ 158.174 Suspension of a Certificate of Adequacy: Procedure.

(a) If no evidence or arguments are submitted in response to a notification of a suspension order, the suspension is effective on the date stated in the order.

(b) If any petition for withdrawing a suspension order is submitted in response to a notification of a suspension order, the COTP considers the evidence or arguments and notifies the person in charge of any action taken including—

(1) Denial of the petition for withdrawing a suspension order;

(2) Initiation of civil or criminal penalty action under Subpart 1.07 of Part 1 of this chapter; or

(3) Withdrawing the suspension order.

§ 158.176 Effect of suspension of a Certificate of Adequacy.

After the COTP notifies the person in charge and places a suspension order in effect, the COTP denies entry of ships to the port or terminal while the Certificate of Adequacy is suspended.

§ 158.178 Actions during a suspension.

(a) If a Certificate of Adequacy is suspended for longer than a five day period, the person in charge shall return it to the COTP within five days after the suspension becomes effective.

(b) After the suspension is in effect, the COTP may—

(1) Terminate the suspension order after receiving information from the person in charge that corrective action has been taken; or

(2) Revoke the Certificate of Adequacy if no significant action is undertaken by the person in charge to meet any measures ordered by the COTP.

§ 158.180 Certificate of Adequacy: Procedures after revocation or the part no longer applies.

(a) If a Certificate of Adequacy is revoked, the person in charge shall return it to the COTP within five days after the revocation becomes effective.

(b) When this part no longer applies to the port or terminal, the person in charge shall return the Certificate of Adequacy to the COTP within 30 days after this part no longer applies.

(c) After the Certificate of Adequacy has been returned to the COTP under paragraph (a) or (b) of this section, an application for a new Certificate of Adequacy may be submitted under § 158.140.

§ 158.190 Appeals.

(a) Any person directly affected by an action taken under this part may request reconsideration by the Coast Guard officer responsible for that action.

(b) Except as provided under paragraph (e) of this section, the person affected who is not satisfied with a ruling after having it reconsidered under paragraph (a) of this section may—

(1) Appeal that ruling in writing within 30 days after the ruling to the Coast Guard District Commander of the district in which the action was taken; and

(2) Supply supporting documentation and evidence that the appellant wishes to have considered.

(c) The District Commander issues a ruling after reviewing the appeal submitted under paragraph (b) of this section. Except as provided under paragraph (e) of this section, the person affected who is not satisfied with this ruling may—

(1) Appeal that ruling in writing within 30 days after the ruling to the Assistant Commandant for Marine Safety and Environmental Protection, U.S. Coast Guard, Washington, DC, 20593; and

(2) Supply supporting documentation and evidence that the appellant wishes to have considered.

(d) After reviewing the appeal submitted under paragraph (c) of this section, the Assistant Commandant for Marine Safety and Environmental Protection issues a ruling which is final agency action.

(e) If the delay in presenting a written appeal has an adverse impact on the operations of the appellant, the appeal under paragraph (b) or (c) of this section—

(1) May be presented orally; and

(2) Must be submitted in writing within five days after the oral presentation—

(i) With the basis for the appeal and a summary of the material presented orally; and

(ii) To the same Coast Guard official who heard the oral presentation.

[CGD 85–010, 52 FR 7761, Mar. 12, 1987, as amended by CGD 96–026, 61 FR 33668, June 28, 1996; CGD 97–023, 62 FR 33364, June 19, 1997]

Subpart B—Criteria for Reception Facilities: Residues and Mixtures Containing Oil

SOURCE: CGD 78–035, 50 FR 36793, Sept. 9, 1985, unless otherwise noted.

§ 158.200 General.

(a) Except as allowed in paragraph (b) of this section, the facility used to meet Regulation 12 of Annex I to MARPOL 73/78 must—

(1) Be a reception facility as defined under § 158.120 that is available at the port or terminal;

(2) Hold each Federal, State, and local permit and license required by environmental laws and regulations concerning residues and mixtures containing oil; and

(3) Be capable of—

(i) Receiving residues and mixtures containing oil from oceangoing ships within 24 hours after notice by that ship;

(ii) Completing the reception of oily ballast from the ship in less than 10 hours after waste transfer operations begin; and

(iii) Completing the reception of other residues and mixtures containing oil in less than 4 hours after the transfer operation begins.

(b) Reception facilities for ship repair yards do not have to meet paragraphs (a)(3)(i) through (a)(3)(iii) of this section, but must be capable of completing transfer of residues and mixtures containing oil from each oceangoing ship before the ship departs from the ship repair yard.

[CGD 78–035, 50 FR 36793, Sept. 9, 1985, as amended by CGD 85–010, 52 FR 7764, Mar. 12, 1987]

§ 158.210 Ports and terminals loading crude oil.

The reception facility for a crude oil loading port or terminal must have the capacity for receiving—

(a) Sludge from on-board fuel and lubricating oil processing in the amount of 10 metric tons (11 short tons);

(b) Oily bilge water in the amount of 10 metric tons (11 short tons) or 2 metric tons (2.2 short tons) multiplied by the daily vessel average, whichever quantity is greater; and

(c) Oily ballast in the amount of 30% of the deadweight tonnage of the largest of the oceangoing tankers loading crude oil at the port or terminal that do not have clean ballast tanks (CBT), segregated ballast tanks (SBT), or crude oil washing (COW) meeting Part 157 of this subchapter, multiplied by one or the daily vessel average, whichever quantity is greater.

[CGD 78–035, 50 FR 36793, Sept. 9, 1985, as amended by CGD 85–010, 52 FR 7764, Mar. 12, 1987]

§ 158.220 Ports and terminals loading more than 1,000 metric tons of oil other than crude oil or bunker oil.

The reception facility for an oil loading port or terminal that loads a daily average of more than 1,000 metric tons (1,100 short tons) of oil other than crude oil or bunker oil to oceangoing tankers must have the capacity for receiving—

(a) Sludge from on-board fuel and lubricating oil processing in the amount of 10 metric tons (11 short tons);

(b) Oily bilge water in the amount of 10 metric tons (11 short tons) or 2 metric tons (2.2 short tons) multiplied by the daily vessel average, whichever quantity is greater;

(c) Oily ballast in the amount of 30% of the deadweight tonnage of the largest of the oceangoing tankers loading oil other than crude oil or bunker oil, at the port or terminal, that do not have CBT or SBT meeting Part 157 of this chapter, multiplied by one or the daily vessel average, whichever quantity is greater; and

(d) Cargo residue in the amount of 0.2% of the total cargo capacity of the largest of the oceangoing tankers loading oil other than crude oil or bunker oil, at the port or terminal, multiplied by one or the daily vessel average, whichever quantity is greater.

[CGD 78–035, 50 FR 36793, Sept. 9, 1985, as amended by CGD 85–010, 52 FR 7764, Mar. 12, 1987]

§ 158.230 Ports and terminals other than ports and terminals under §§ 158.210, 158.220, and 158.240.

Reception facilities for ports and terminals other than those under §§ 158.210, 158.220, and 158.240 of this subpart and those that are used exclusively by non-self-propelled tank barges, must have the capacity for receiving—

(a) Sludge from on-board fuel and lubricating oil processing in the amount of 10 metric tons (11 short tons), or 1 metric ton (1.1 short tons) multiplied by the daily vessel average, whichever quantity is greater; and

(b) Oily bilge water in the amount of 10 metric tons (11 short tons) or 2 metric tons (2.2 short tons) multiplied by the daily vessel average, whichever quantity is greater.

[CGD 78–035, 50 FR 36793, Sept. 9, 1985, as amended by CGD 85–010, 52 FR 7764, Mar. 12, 1987]

§ 158.240 Ship repair yards.

The reception facility that services oceangoing ships using a ship repair yard must have a capacity for receiving—

(a) An amount of ballast from bunker tanks, and the wash water and residues from the cleaning of bunker tanks and sludge tanks, equal to 8% of the bunker capacity of the largest oceangoing ship serviced;

(b) An amount of oily solids from cargo tanks equal to 0.1% of the deadweight tonnage of the largest oceangoing tanker serviced;

(c) An amount of oily ballast water and wash water from in-port tank washing equal to—

(1) 1,500 metric tons (1,650 short tons), or;

(2) 4½% of the deadweight tonnage of the largest oceangoing tanker serviced; and

(d) An amount of liquid cargo residues based on the following percentages of deadweight tonnage of the largest oceangoing tanker serviced:

(1) For crude oil oceangoing tankers, 1%.

(2) For black product oceangoing tankers, 0.5%

(3) For white product oceangoing tankers, 0.2%

§ 158.250 Standard discharge connection.

Each reception facility that received oily bilge water must have a standard discharge connection that—

(a) Meets § 155.430 of this subchapter; and

(b) Attaches to each hose or pipe that removes oily bilge water from oceangoing ships.

[CGD 78–035, 50 FR 36793, Sept. 9, 1985]

Subpart C—Criteria for Certifying That a Port's or Terminal's Facilities Are Adequate for Receiving NLS Residue

SOURCE: CGD 85–010, 52 FR 7764, Mar. 12, 1987, unless otherwise noted.

§158.300 Purpose.

The purpose of this subpart is to supply the criteria needed for ports and terminals under §158.110 used by oceangoing ships carrying NLS cargo or NLS residue to meet Regulation 7 of Annex II to MARPOL 73/78.

§158.310 Reception facilities: General.

(a) Except as allowed in paragraph (b) of this section, each reception facility, in order to pass the inspection under §158.160, must—

(1) Be a reception facility as defined under §158.120;

(2) Be available at the port or terminal;

(3) Meet the requirements of §158.320;

(4) Hold each Federal, State, and local permit and license required by environmental laws and regulations concerning NLS residue;

(5) Be capable of receiving NLS residue from an oceangoing ship within 24 hours after notice by that ship of the need for reception facilities; and

(6) Be capable of completing the transfer of NLS residue within 10 hours after the transfer of NLS residue begins.

(b) A reception facility for a ship repair yard does not have to meet the requirements of paragraphs (a)(5) and (a)(6) of this section if it is capable of completing transfer of NLS residue from an oceangoing ship before the ship departs from the yard.

§158.320 Reception facilities: Capacity, and exceptions.

(a) Except as allowed in paragraph (b) of this section, each day the port or terminal is in operation, the port or terminal must have a reception facility that is capable of receiving—

(1) 75 cubic meters (19,810 gallons) of NLS residue for each regulated NLS cargo that is a solidifying Category A NLS; or

(2) 50 cubic meters (13,210 gallons) of NLS residue for each regulated NLS cargo that is not a solidifying Category A.

(b) The port or terminal need only meet §158.330 if it is used by ships that only transfer Category B or C NLS cargoes that are not high viscosity or solidifying Category B or C NLSs.

(c) For each category of NLS cargo carried on a ship, each day a ship repair yard is in operation and being used by a ship that must discharge NLS residue in order to proceed with repair work, the ship repair yard must have a reception facility that is capable of receiving—

(1) 50 cubic meters (13,210 gallons) of NLS residue that contains a—

(i) Category A NLS that is not a solidifying NLS;

(ii) Category B NLS; or

(iii) Category C NLS; or

(iv) Category D NLS; or

(2) 75 cubic meters (19,810 gallons) of NLS residue that contains a Category A NLS that is a solidifying NLS cargo.

§158.330 Ports and terminals: Equipment.

Each port and terminal except ship repair yards, in order to pass the inspection under §158.160, must—

(a) At mean low tide and with the ship's manifold 10 feet above the surface of the water, be capable of receiving Category B or C NLS cargo during the stripping operations at an average flow rate of 6 cubic meters (1584 gallons) per hour without the backpressure at the ship's manifold exceeding 101.6 kPa (14.7 pounds per square inch gauge) pressure; and

(b) Have an instruction manual that lists the equipment and procedures for meeting paragraph (a) of this section. The instruction manual may be made part of the operations manual that is required under §154.300 of this chapter.

Subpart D—Criteria for Adequacy of Reception Facilities: Garbage

SOURCE: CGD 88–002, 54 FR 18409, Apr. 28, 1989, unless otherwise noted.

§ 158.400 Purpose.

The purpose of this subpart is to supply the criteria for determining the adequacy of reception facilities for garbage at ports and terminals that receive ships and to comply with the Act and Regulation 7 of Annex V to MARPOL 73/78.

§ 158.410 Reception facilities: General.

(a) Except as allowed in paragraph (b) of this section, the person in charge of a port or terminal shall ensure that each port or terminal's reception facility.

(1) Is capable after August 28, 1989 of receiving APHIS regulated garbage at a port or terminal no later than 24 hours after notice under § 151.65 of this chapter is given to the port or terminal, unless it only receives ships that—

(i) Operate exclusively within the navigable waters of the United States;

(ii) Operate exclusively between ports or terminals in the continental United States; or

(iii) Operate exclusively between continental United States ports or terminals and Canadian ports or terminals.

(2) Is capable of receiving medical wastes or hazardous wastes defined in 40 CFR 261.3, unless the port or terminal operator can provide to the master, operator, or person in charge of a ship, a list of persons authorized by federal, state, or local law or regulation to transport and treat such wastes;

(3) Is arranged so that it does not interfere with port or terminal operations;

(4) Is conveniently located so that mariners unfamiliar with the port or terminal can find it easily and so that it's use will not be discouraged;

(5) Is situated so that garbage from ships which has been placed in it cannot readily enter the water; and

(6) Holds each federal, state, and local permit or license required by environmental and public health laws and regulations concerning garbage handling.

(b) A reception facility for a ship repair yard does not have to meet the requirements of paragraph (a)(1) of this section if it is capable of handling the transfer of garbage from a ship before the ship departs from the yard.

NOTE: The U.S. Department of Agriculture's Animal and Plant Health Inspection Service (APHIS) requires victual wastes or garbage contaminated by victual wastes, except from vessels that operate only between the continental United States and Canadian ports, to be incinerated or sterilized in accordance with their regulations in 7 CFR 330.400 and 9 CFR 94.5.

§ 158.420 Reception facilities: Capacity and exceptions.

Each day a port or terminal is in operation, the person in charge of a port or terminal must provide, or ensure the availability of, a reception facility that is capable of receiving all garbage that the master or person who is in charge of a ship desires to discharge, except—

(a) Large quantities of spoiled or damaged cargoes not usually discharged by a ship; or

(b) Garbage from ships not having commercial transactions with that port or terminal.

Subpart E—Port and Terminal Operations

SOURCE: CGD 85–010, 52 FR 7765, Mar. 12, 1987, unless otherwise noted. Redesignated by CGD 88–002, 54 FR 18409, Apr. 28, 1989.

§ 158.500 Draining cargo area and piping systems.

The person in charge shall ensure that each cargo hose and each piping system containing NLS received from each oceangoing ship carrying NLS cargo is not drained back into the ship.

§ 158.520 Following the instruction manual.

The person in charge shall ensure that the instruction manual under § 158.330(b) is followed during the transfer of any NLS.

PART 159—MARINE SANITATION DEVICES

Subpart A—General

Sec.

159.1 Purpose.
159.3 Definitions.

159.5 Requirements for vessel manufacturers.
159.7 Requirements for vessel operators.

Subpart B—Certification Procedures

159.11 Purpose.
159.12 Regulations for certification of existing devices.
159.12a Certification of certain Type III devices.
159.14 Application for certification.
159.15 Certification.
159.16 Authorization to label devices.
159.17 Changes to certified devices.
159.19 Testing equivalency.

Subpart C—Design, Construction, and Testing

159.51 Purpose and scope.
159.53 General requirements.
159.55 Identification.
159.57 Installation, operation, and maintenance instructions.
159.59 Placard.
159.61 Vents.
159.63 Access to parts.
159.65 Chemical level indicator.
159.67 Electrical component ratings.
159.69 Motor ratings.
159.71 Electrical controls and conductors.
159.73 Conductors.
159.75 Overcurrent protection.
159.79 Terminals.
159.81 Baffles.
159.83 Level indicator.
159.85 Sewage removal.
159.87 Removal fittings.
159.89 Power interruption: Type I and II devices.
159.93 Independent supporting.
159.95 Safety.
159.97 Safety: inspected vessels.
159.101 Testing: general.
159.103 Vibration test.
159.105 Shock test.
159.107 Rolling test.
159.109 Pressure test.
159.111 Pressure and vacuum pulse test.
159.115 Temperature range test.
159.117 Chemical resistance test.
159.119 Operability test; temperature range.
159.121 Sewage processing test.
159.123 Coliform test: Type I devices.
159.125 Visible floating solids: Type I devices.
159.126 Coliform test: Type II devices.
159.126a Suspended solids test: Type II devices.
159.127 Safety coliform count: Recirculating devices.
159.129 Safety: Ignition prevention test.
159.131 Safety: Incinerating device.

Subpart D—Recognition of Facilities

159.201 Recognition of facilities.

AUTHORITY: Sec. 312(b)(1), 86 Stat. 871 (33 U.S.C. 1322(b)(1)); 49 CFR 1.45(b) and 1.46(l) and (m).

SOURCE: CGD 73–83, 40 FR 4624, Jan. 30, 1975, unless otherwise noted.

Subpart A—General

§159.1 Purpose.

This part prescribes regulations governing the design and construction of marine sanitation devices and procedures for certifying that marine sanitation devices meet the regulations and the standards of the Environmental Protection Agency promulgated under section 312 of the Federal Water Pollution Control Act (33 U.S.C. 1322), to eliminate the discharge of untreated sewage from vessels into the waters of the United States, including the territorial seas. Subpart A of this part contains regulations governing the manufacture and operation of vessels equipped with marine sanitation devices.

§159.3 Definitions.

In this part:

Coast Guard means the Commandant or his authorized representative.

Discharge includes, but is not limited to, any spilling, leaking, pouring, pumping, emitting, emptying, or dumping.

Existing vessel includes any vessel, the construction of which was initiated before January 30, 1975.

Fecal coliform bacteria are those organisms associated with the intestine of warm-blooded animals that are commonly used to indicate the presence of fecal material and the potential presence of organisms capable of causing human disease.

Inspected vessel means any vessel that is required to be inspected under 46 CFR Ch. I.

Length means a straight line measurement of the overall length from the foremost part of the vessel to the aftermost part of the vessel, measured parallel to the centerline. Bow sprits, bumpkins, rudders, outboard motor brackets, and similar fittings or attachments are not to be included in the measurement.

Manufacturer means any person engaged in manufacturing, assembling, or

importing of marine sanitation devices or of vessels subject to the standards and regulations promulgated under section 312 of the Federal Water Pollution Control Act.

Marine sanitation device and *device* includes any equipment for installation on board a vessel which is designed to receive, retain, treat, or discharge sewage, and any process to treat such sewage.

New vessel includes any vessel, the construction of which is initiated on or after January 30, 1975.

Person means an individual, partnership, firm, corporation, or association, but does not include an individual on board a public vessel.

Public vessel means a vessel owned or bare-boat chartered and operated by the United States, by a State or political subdivision thereof, or by a foreign nation, except when such vessel is engaged in commerce.

Recognized facility means any laboratory or facility listed by the Coast Guard as a recognized facility under this part.

Sewage means human body wastes and the wastes from toilets and other receptacles intended to receive or retain body waste.

Territorial seas means the belt of the seas measured from the line of ordinary low water along that portion of the coast which is in direct contact with the open sea and the line marking the seaward limit of inland waters, and extending seaward a distance of 3 miles.

Type I marine sanitation device means a device that, under the test conditions described in §§ 159.123 and 159.125, produces an effluent having a fecal coliform bacteria count not greater than 1,000 per 100 milliliters and no visible floating solids.

Type II marine sanitation device means a device that, under the test conditions described in §§ 159.126 and 159.126a, produces an effluent having a fecal coliform bacteria count not greater than 200 per 100 milliliters and suspended solids not greater than 150 milligrams per liter.

Type III marine sanitation device means a device that is designed to prevent the overboard discharge of treated or untreated sewage or any waste derived from sewage.

Uninspected vessel means any vessel that is not required to be inspected under 46 CFR Chapter I.

United States includes the States, the District of Columbia, the Commonwealth of Puerto Rico, the Virgin Islands, Guam, American Samoa, the Canal Zone, and the Trust Territory of the Pacific Islands.

Vessel includes every description of watercraft or other artificial contrivance used, or capable of being used, as a means of transportation on the waters of the United States.

[CGD 96–026, 61 FR 33668, June 28, 1996, as amended by CGD 95–028, 62 FR 51194, Sept. 30, 1997]

§ 159.5 Requirements for vessel manufacturers.

No manufacturer may manufacture for sale, sell, offer for sale, or distribute for sale or resale any vessel equipped with installed toilet facilities unless it is equipped with:

(a) An operable Type II or III device that has a label on it under § 159.16 or that is certified under § 159.12 or § 159.12a; or

(b) An operable Type I device that has a label on it under § 159.16 or that is certified under § 159.12, if the vessel is 19.7 meters (65 feet) or less in length.

[CGD 95–028, 62 FR 51194, Sept. 30, 1997]

§ 159.7 Requirements for vessel operators.

(a) No person may operate any vessel equipped with installed toilet facilities unless it is equipped with:

(1) An operable Type II or III device that has a label on it under § 159.16 or that is certified under § 159.12 or § 159.12a; or

(2) An operable Type I device that has a label on it under § 159.16 or that is certified under § 159.12, if the vessel is 19.7 meters (65 feet) or less in length.

(b) When operating a vessel on a body of water where the discharge of treated or untreated sewage is prohibited by the Environmental Protection Agency under 40 CFR 140.3 or 140.4, the operator must secure each Type I or Type II device in a manner which prevents

discharge of treated or untreated sewage. Acceptable methods of securing the device include—

(1) Closing the seacock and removing the handle;

(2) Padlocking the seacock in the closed position;

(3) Using a non-releasable wire-tie to hold the seacock in the closed position; or

(4) Locking the door to the space enclosing the toilets with a padlock or door handle key lock.

(c) When operating a vessel on a body of water where the discharge of untreated sewage is prohibited by the Environmental Protection Agency under 40 CFR 140.3, the operator must secure each Type III device in a manner which prevents discharge of sewage. Acceptable methods of securing the device include—

(1) Closing each valve leading to an overboard discharge and removing the handle;

(2) Padlocking each valve leading to an overboard discharge in the closed position; or

(3) Using a non-releasable wire-tie to hold each valve leading to an overboard discharge in the closed position.

[CGH 95–028, 62 FR 51194, Sept. 30, 1997]

Subpart B—Certification Procedures

§159.11 Purpose.

This subpart prescribes procedures for certification of marine sanitation devices and authorization for labels on certified devices.

§159.12 Regulations for certification of existing devices.

(a) The purpose of this section is to provide regulations for certification of existing devices until manufacturers can design and manufacture devices that comply with this part and recognized facilities are prepared to perform the testing required by this part.

(b) Any Type III device that was installed on an existing vessel before January 30, 1975, is considered certified.

(c) Any person may apply to the Commandant (G–MSE), U.S. Coast Guard, Washington, D.C. 20593–0001 for certification of a marine sanitation device manufactured before January 30, 1976. The Coast Guard will issue a letter certifying the device if the applicant shows that the device meets §159.53 by:

(1) Evidence that the device meets State standards at least equal to the standards in §159.53, or

(2) Test conducted under this part by a recognized laboratory, or

(3) Evidence that the device is substantially equivalent to a device certified under this section, or

(4) A Coast Guard field test if considered necessary by the Coast Guard.

(d) The Coast Guard will maintain and make available a list that identifies each device certified under this section.

(e) Devices certified under this section in compliance with §159.53 need not meet the other regulations in this part and may not be labeled under §159.16.

[CGD 73–83, 40 FR 4624, Jan. 30, 1975, as amended by CGD 75–213, 41 FR 15325, Apr. 12, 1976; CGD 82–063a, 48 FR 4776, Feb. 3, 1983; CGD 88–052, 53 FR 25122, July 1, 1988; CGD 96–026, 61 FR 33668, June 28, 1996]

§159.12a Certification of certain Type III devices.

(a) The purpose of this section is to provide regulations for certification of certain Type III devices.

(b) Any Type III device is considered certified under this section if:

(1) It is used solely for the storage of sewage and flushwater at ambient air pressure and temperature; and

(2) It is in compliance with §159.53(c).

(c) Any device certified under this section need not comply with the other regulations in this part except as required in paragraphs (b)(2) and (d) of this section and may not be labeled under §159.16.

(d) Each device certified under this section which is installed aboard an inspected vessel must comply with §159.97.

[CGD 76–145, 42 FR 11, Jan. 3, 1977]

§159.14 Application for certification.

(a) Any manufacturer may apply to any recognized facility for certification

of a marine sanitation device. The application for certification must indicate whether the device will be used aboard all vessels or only aboard uninspected vessels and to which standard in § 159.53 the manufacturer requests the device to be tested.

(b) An application may be in any format but must be in writing and must be signed by an authorized representative of the manufacturer and include or be accompanied by:

(1) A complete description of the manufacturer's production quality control and inspection methods, record keeping systems pertaining to the manufacture of marine sanitation devices, and testing procedures;

(2) The design for the device, including drawings, specifications and other information that describes the materials, construction and operation of the device;

(3) The installation, operation, and maintenance instructions for the device; and

(4) The name and address of the applicant and the manufacturing facility.

(c) The manufacturer must furnish the recognized facility one device of each model for which certification is requested and samples of each material from which the device is constructed, that must be tested destructively under § 159.117. The device furnished is for the testing required by this part except that, for devices that are not suited for unit testing, the manufacturer may submit the design so that the recognized facility may determine the components of the device and materials to be submitted for testing and the tests to be performed at a place other than the facility. The Coast Guard must review and accept all such determinations before testing is begun.

(d) At the time of submittal of an application to a recognized facility the manufacturer must notify the Coast Guard of the type and model of the device, the name of the recognized facility to which application is being made, and the name and address of the manufacturer, and submit a signed statement of the times when the manufacturer will permit designated officers and employees of the Coast Guard to have access to the manufacturer's facilities and all records required by this part.

[CGD 73–83, 40 FR 4624, Jan. 30, 1975, as amended by CGD 75–213, 41 FR 15325, Apr. 12, 1976]

§ 159.15 Certification.

(a) The recognized facility must evaluate the information that is submitted by the manufacturer in accordance with § 159.14(b) (1), (2), and (3), evaluate the device for compliance with §§ 159.53 through 159.95, test the device in accordance with § 159.101 and submit to the Commandant (G–MSE), U.S. Coast Guard, Washington, D.C. 20593–0001 the following:

(1) The information that is required under § 159.14(b);

(2) A report on compliance evaluation;

(3) A description of each test;

(4) Test results; and

(5) A statement, that is signed by the person in charge of testing, that the test results are accurate and complete.

(b) The Coast Guard certifies a test device, on the design of the device, if it determines, after consideration of the information that is required under paragraph (a) of this section, that the device meets the requirements in Subpart C of this part.

(c) The Coast Guard notifies the manufacturer and recognized facility of its determination under paragraph (b) of this section. If the device is certified, the Coast Guard includes a certification number for the device. If certification is denied, the Coast Guard notifies the manufacturer and recognized facility of the requirements of this part that are not met. The manufacturer may appeal a denial to the Commandant (G–MSE), U.S. Coast Guard, Washington, D.C. 20593–0001.

(d) If upon re-examination of the test device, the Coast Guard determines that the device does not in fact comply with the requirements of Subpart C of this part, it may terminate the certification.

[CGD 73–83, 40 FR 4624, Jan. 30, 1975, as amended by CGD 75–213, 41 FR 15326, Apr. 12, 1976; CGD 82–063a, 48 FR 4776, Feb. 3, 1983; CGD 88–052, 53 FR 25122, July 1, 1988; CGD 96–026, 61 FR 33668, June 28, 1996]

§159.16 Authorization to label devices.

(a) When a test device is certified under §159.15(b), the Coast Guard will issue a letter that authorizes the manufacturer to label each device that he manufactures with the manufacturer's certification that the device is in all material respects substantially the same as a test device certified by the U.S. Coast Guard pursuant to section 312 of the Federal Water Pollution Control Act Amendments of 1972.

(b) Certification placed on a device by its manufacturer under this section is the certification required by section 312(h)(4) of the Federal Water Pollution Control Act Amendments of 1972, which makes it unlawful for a vessel that is subject to the standards and regulations promulgated under the Act to operate on the navigable waters of the United States, if such vessel is not equipped with an operable marine sanitation device certified pursuant to section 312 of the Act.

(c) Letters of authorization issued under this section are valid for 5 years, unless sooner suspended, withdrawn, or terminated and may be reissued upon written request of the manufacturer to whom the letter was issued.

(d) The Coast Guard, in accordance with the procedure in 46 CFR 2.75, may suspend, withdraw, or terminate any letter of authorization issued under this section if the Coast Guard finds that the manufacturer is engaged in the manufacture of devices labeled under this part that are not in all material respects substantially the same as a test device certified pursuant to this part.

§159.17 Changes to certified devices.

(a) The manufacturer of a device that is certified under this part shall notify the Commandant (G–MSE), U.S. Coast Guard, Washington, D.C. 20593–0001 in writing of any change in the design of the device.

(b) A manufacturer shall include with a notice under paragraph (a) of this section a description of the change, its advantages, and the recommendation of the recognized facility as to whether the device remains in all material respects substantially the same as the original test device.

(c) After notice under paragraph (a) of this section, the Coast Guard notifies the manufacturer and the recognized facility in writing of any tests that must be made for certification of the device or for any change in the letter of authorization. The manufacturer may appeal this determination to the Commandant (G–MSE), U.S. Coast Guard, Washington, D.C. 20593–0001.

[CGD 73–83, 40 FR 4624, Jan. 30, 1975, as amended by CGD 82–063a, 48 FR 4776, Feb. 3, 1983; CGD 88–052, 53 FR 25122, July 1, 1988; CGD 96–026, 61 FR 33668, June 28, 1996]

§159.19 Testing equivalency.

(a) If a test required by this part may not be practicable or necessary, a manufacturer may apply to the Commandant (G–MSE), U.S. Coast Guard, Washington, DC 20593–0001 for deletion or approval of an alternative test as equivalent to the test requirements in this part. The application must include the manufacturer's justification for deletion or the alternative test and any alternative test data.

(b) The Coast Guard notifies the manufacturer of its determination under paragraph (a) of this section and that determination is final.

[CGD 73–83, 40 FR 4624, Jan. 30, 1975, as amended by CGD 82–063a, 48 FR 4776, Feb. 3, 1983; CGD 88–052, 53 FR 25122, July 1, 1988; CGD 96–026, 61 FR 33668, June 28, 1996]

Subpart C—Design, Construction, and Testing

§159.51 Purpose and scope.

(a) This subpart prescribes regulations governing the design and construction of marine sanitation devices.

(b) Unless otherwise authorized by the Coast Guard each device for which certification under this part is requested must meet the requirements of this subpart.

§159.53 General requirements.

A device must:

(a) Under the test conditions described in §§159.123 and 159.125, produce an effluent having a fecal coliform bacteria count not greater than 1,000 per 100 milliliters and no visible floating solids (Type I),

(b) Under the test conditions described in §§ 159.126 and 159.126a, produce an effluent having a fecal coliform bacteria count not greater than 200 per 100 milliliters and suspended solids not greater than 150 milligrams per liter (Type II), or

(c) Be designed to prevent the overboard discharge of treated or untreated sewage or any waste derived from sewage (Type III).

[CGD 73–83, 40 FR 4624, Jan. 30, 1975, as amended by CGD 75–213, 41 FR 15325, Apr. 12, 1976]

§ 159.55 Identification.

(a) Each production device must be legibly marked in accordance with paragraph (b) of this section with the following information:

(1) The name of the manufacturer.

(2) The name and model number of the device.

(3) The month and year of completion of manufacture.

(4) Serial number.

(5) Whether the device is certified for use on an inspected or an uninspected vessel.

(6) Whether the device is Type I, II, or III.

(b) The information required by paragraph (a) of this section must appear on a nameplate attached to the device or in lettering on the device. The nameplate or lettering stamped on the device must be capable of withstanding without loss of legibility the combined effects of normal wear and tear and exposure to water, salt spray, direct sunlight, heat, cold, and any substance listed in § 159.117(b) and (c). The nameplate and lettering must be designed to resist efforts to remove them from the device or efforts to alter the information stamped on the nameplate or the device without leaving some obvious evidence of the attempted removal or alteration.

[CGD 73–83, 40 FR 4624, Jan. 30, 1975, as amended by CGD 75–213, 41 FR 15325, Apr. 12, 1976]

§ 159.57 Installation, operation, and maintenance instructions.

(a) The instructions supplied by the manufacturer must contain directions for each of the following:

(1) Installation of the device in a manner that will permit ready access to all parts of the device requiring routine service and that will provide any flue clearance necessary for fire safety.

(2) Safe operation and servicing of the device so that any discharge meets the applicable requirements of § 159.53.

(3) Cleaning, winter layup, and ash or sludge removal.

(4) Installation of a vent or flue pipe.

(5) The type and quantity of chemicals that are required to operate the device, including instructions on the proper handling, storage and use of these chemicals.

(6) Recommended methods of making required plumbing and electrical connections including fuel connections and supply circuit overcurrent protection.

(b) The instructions supplied by the manufacturer must include the following information:

(1) The name of the manufacturer.

(2) The name and model number of the device.

(3) Whether the device is certified for use on an inspected, or uninspected vessel.

(4) A complete parts list.

(5) A schematic diagram showing the relative location of each part.

(6) A wiring diagram.

(7) A description of the service that may be performed by the user without coming into contact with sewage or chemicals.

(8) Average and peak capacity of the device for the flow rate, volume, or number of persons that the device is capable of serving and the period of time the device is rated to operate at peak capacity.

(9) The power requirements, including voltage and current.

(10) The type and quantity of fuel required.

(11) The duration of the operating cycle for unitized incinerating devices.

(12) The maximum angles of pitch and roll at which the device operates in accordance with the applicable requirements of § 159.53.

(13) Whether the device is designed to operate in salt, fresh, or brackish water.

(14) The maximum hydrostatic pressure at which a pressurized sewage retention tank meets the requirements of §159.111.

(15) The maximum operating level of liquid retention components.

(16) Whether the device is Type I, II, or III.

(17) A statement as follows:

NOTE: The EPA standards state that in freshwater lakes, freshwater reservoirs or other freshwater impoundments whose inlets or outlets are such as to prevent the ingress or egress by vessel traffic subject to this regulation, or in rivers not capable of navigation by interstate vessel traffic subject to this regulation, marine sanitation devices certified by the U.S. Coast Guard installed on all vessels shall be designed and operated to prevent the overboard discharge of sewage, treated or untreated, or of any waste derived from sewage. The EPA standards further state that this shall not be construed to prohibit the carriage of Coast Guard-certified flow-through treatment devices which have been secured so as to prevent such discharges. They also state that waters where a Coast Guard-certified marine sanitation device permitting discharge is allowed include coastal waters and estuaries, the Great Lakes and interconnected waterways, freshwater lakes and impoundments accessible through locks, and other flowing waters that are navigable interstate by vessels subject to this regulation (40 CFR 140.3).

[CGD 73–83, 40 FR 4624, Jan. 30, 1975, as amended by CGD 75–213, 41 FR 15325, Apr. 12, 1976]

§159.59 Placard.

Each device must have a placard suitable for posting on which is printed the operating instructions, safety precautions, and warnings pertinent to the device. The size of the letters printed on the placard must be one-eighth of an inch or larger.

§159.61 Vents.

Vents must be designed and constructed to minimize clogging by either the contents of the tank or climatic conditions such as snow or ice.

§159.63 Access to parts.

Each part of the device that is required by the manufacturer's instructions to be serviced routinely must be readily accessible in the installed position of the device recommended by the manufacturer.

§159.65 Chemical level indicator.

The device must be equipped with one of the following:

(a) A means of indicating the amount in the device of any chemical that is necessary for its effective operation.

(b) A means of indicating when chemicals must be added for the proper continued operation of the device.

§159.67 Electrical component ratings.

Electrical components must have current and voltage ratings equal to or greater than the maximum load they may carry.

§159.69 Motor ratings.

Motors must be rated to operate at 50 °C ambient temperature.

§159.71 Electrical controls and conductors.

Electrical controls and conductors must be installed in accordance with good marine practice. Wire must be copper and must be stranded. Electrical controls and conductors must be protected from exposure to chemicals and sewage.

§159.73 Conductors.

Current carrying conductors must be electrically insulated from non-current carrying metal parts.

§159.75 Overcurrent protection.

Overcurrent protection must be provided within the unit to protect subcomponents of the device if the manufacturer's recommended supply circuit overcurrent protection is not adequate for these subcomponents.

§159.79 Terminals.

Terminals must be solderless lugs with ring type or captive spade ends, must have provisions for being locked against movement from vibration, and must be marked for identification on the wiring diagram required in §159.57. Terminal blocks must be nonabsorbent and securely mounted. Terminal blocks must be provided with barrier insulation that prevents contact between adjacent terminals or metal surfaces.

§ 159.81 Baffles.

Baffles in sewage retention tanks, if any, must have openings to allow liquid and vapor to flow freely across the top and bottom of the tank.

§ 159.83 Level indicator.

Each sewage retention device must have a means of indicating when the device is more than ¾ full by volume.

§ 159.85 Sewage removal.

The device must be designed for efficient removal of nearly all of the liquid and solids in the sewage retention tank.

§ 159.87 Removal fittings.

If sewage removal fittings or adapters are provided with the device, they must be of either 1½″ or 4″ nominal pipe size.

§ 159.89 Power interruption: Type I and II devices.

A discharge device must be designed so that a momentary loss of power during operation of the device does not allow a discharge that does not meet the requirements in § 159.53.

[CGD 73–83, 40 FR 4624, Jan. 30, 1975, as amended by CGD 75–213, 41 FR 15326, Apr. 12, 1976]

§ 159.93 Independent supporting.

The device must have provisions for supporting that are independent from connecting pipes.

§ 159.95 Safety.

(a) Each device must—

(1) Be free of design defects such as rough or sharp edges that may cause bodily injuries or that would allow toxic substances to escape to the interior of the vessel;

(2) Be vented or provided with a means to prevent an explosion or over pressurization as a result of an accumulation of gases; and

(3) Meet all other safety requirements of the regulations applicable to the type of vessel for which it is certified.

(b) A chemical that is specified or provided by the manufacturer for use in the operation of a device and is defined as a hazardous material in 46 CFR Part 146 must be certified by the procedures in 46 CFR Part 147.

(c) Current carrying components must be protected from accidental contact by personnel operating or routinely servicing the device. All current carrying components must as a minimum be of drip-proof construction or be enclosed within a drip-proof compartment.

§ 159.97 Safety: inspected vessels.

The Commandant approves the design and construction of devices to be certified for installation and operation on board inspected vessels on the basis of tests and reports of inspection under the applicable marine engineering requirements in Subchapter F of Title 46, Code of Federal Regulations, and under the applicable electrical engineering requirements in Subchapter J of Title 46 Code of Federal Regulations.

[CGD 73–83, 40 FR 4624, Jan. 30, 1975, as amended by CGD 75–213, 41 FR 15326, Apr. 12, 1976]

§ 159.101 Testing: general.

Unless otherwise authorized by the Coast Guard, a recognized facility must perform each test described in §§ 159.103 through 159.131. The same device must be used for each test and tested in the order in which the tests are described. There must be no cracking, softening, deterioration, displacement, breakage, leakage or damage of components or materials that affects the operation or safety of the device after each test described in §§ 159.103 through 159.117 and § 159.121, and the device must remain operable after the test described in § 159.119. The device must be set up in a manner simulating installation on a vessel in accordance with the manufacturer's instructions with respect to mounting, water supply, and discharge fittings.

[CGD 73–83, 40 FR 4624, Jan. 30, 1975, as amended by CGD 75–213, 41 FR 15326, Apr. 12, 1976]

§ 159.103 Vibration test.

The device, with liquid retention components, if any, filled with water to one-half of their volume, must be subjected to a sinusoidal vibration for a period of 12 hours, 4 hours in each of

the x, y, and z planes, at the resonant frequency of the device (or at 55 cycles per second if there is no resonant frequency between 10 to 60 hertz) and with a peak amplitude of 0.019 to 0.021 inches.

§ 159.105 Shock test.

The device, with liquid retention components, if any, filled with water to half of their volume, must be subjected to 1,000 vertical shocks that are ten times the force of gravity (10g) and have a duration of 20–25 milliseconds measured at the base of the half-sine shock envelope.

§ 159.107 Rolling test.

(a) The device, with liquid retention components, if any, filled with water to half of their volume, must be subjected to 100 cycles with the axis of rotation 4 feet from the centerline of the device, no more than 6 inches below the plane of the bottom of the device, and parallel to any tank baffles. The device must then be rotated 90 degrees on its vertical axis and subjected to another 100 cycles. This testing must be repeated with the liquid retention components filled to the maximum operating level as specified by the manufacturer in § 159.57.

(b) Eighty percent of the rolling action must be approximately 15 degrees on either side of the vertical and at a cyclic rate of 3 to 4 seconds. Twenty percent motions must be approximately 30 degrees, or the maximum angle specified by the manufacturer under § 159.57, whichever is greater, on either side of the vertical at a cyclic rate of 6 to 8 seconds.

§ 159.109 Pressure test.

Any sewage retention tank that is designed to operate under pressure must be pressurized hydrostatically at a pressure head of 7 feet or to 150 percent of the maximum pressure specified by the manufacturer for operation of the tank, whichever is greater. The tank must hold the water at this pressure for 1 hour with no evidence of leaking.

§ 159.111 Pressure and vacuum pulse test.

Liquid retention components of the device with manufacturer specified venting installed must be subjected to 50 fillings of water at a pressure head of 7 feet or the maximum pressure specified by the manufacturer for operation of the device, whichever is greater, and then emptied with a 45 gallon per minute or larger positive displacement pump that remains in operation 30 seconds after emptying the tank at the end of each cycle.

§ 159.115 Temperature range test.

(a) The device must be held at a temperature of 60 °C or higher for a period of 16 hours.

(b) The device must be held at a temperature of −40 °C or less for a period of 16 hours following winterization in accordance with manufacturers' instructions.

§ 159.117 Chemical resistance test.

(a) In each case where the recognized facility doubts the ability of a material to withstand exposure to the substances listed in paragraphs (b) and (c) of this section a sample of the material must be tested.

(b) A sample referred to in paragraph (a) of this section must be partially submerged in each of the following substances for 100 hours at an ambient temperature of 22 °C.

(1) Sewage.

(2) Any disinfectant that is required in the operation of the device.

(3) Any chemical compound in solid, liquid or gaseous form, used, emitted or produced in the operation of the device.

(4) Fresh or salt (3.5 percent Sodium Chloride) flush water.

(5) Toilet bowl cleaners.

(6) Engine Oil (SAE/30).

(7) Ethylene Glycol.

(8) Detergents (household and bilge cleaning type).

(c) A sample of the material must be doused 20 times, with a 1 hour drying period between dousings, in each of the following substances:

(1) Gasoline.

(2) Diesel fuel.

(3) Mineral spirits.

(4) Turpentine.

(5) Methyl alcohol.

§ 159.119 Operability test; temperature range.

The device must operate in an ambient temperature of 5 °C with inlet operating fluid temperature varying from 2 °C to 32 °C and in an ambient temperature of 50 °C with inlet operating fluid temperature varying from 2 °C to 32 °C.

§ 159.121 Sewage processing test.

(a) The device must process human sewage in the manner for which it is designed when tested in accordance with this section. There must be no sewage or sewage-treating chemicals remaining on surfaces or in crevices that could come in contact with a person using the device or servicing the device in accordance with the instructions supplied under § 159.57(b)(7).

(b) During the test the device must be operated and maintained in accordance with the manufacturer's instructions. Any initial start-up time specified by the manufacturer must be allowed before test periods begin. For 1 hour of each 8-hour test period, the device must be tilted to the maximum angles specified by the manufacturer under §§ 159.55 and 159.57.

(c) Except for devices described in paragraph (d) of this section, the devices must process and discharge or store human sewage over at least an 8-consecutive hour period on at least 10 days within a 20-day period. The device must receive human sewage consisting of fecal matter, urine, and toilet paper in a ratio of four urinations to one defecation with at least one defecation per person per day. Devices must be tested at their average rate of capacity as specified in § 159.57. In addition, during three periods of each day the system must process sewage at the peak capacity for the period of time it is rated at peak capacity.

(d) A device that processes and discharges continuously between individual use periods or a large device, as determined by the Coast Guard, must process and discharge sewage over at least 10-consecutive days at the average daily capacity specified by the manufacturer. During three periods of each day the system must process sewage at the peak capacity for the period of time it is rated at peak capacity. The sewage for this test must be fresh, domestic sewage to which primary sludge has been added, as necessary, to create a test sewage with a minimum of 500 miligrams of suspended solids per liter.

§ 159.123 Coliform test: Type I devices.

(a) The arithmetic mean of the fecal coliform bacteria in 38 of 40 samples of effluent discharged from a Type I device during the test described in § 159.121 must be less than 1000 per 100 milliliters when tested in accordance with 40 CFR Part 136.

(b) The 40 samples must be taken from the device as follows: During each of the 10-test days, one sample must be taken at the beginning, middle, and end of an 8-consecutive hour period with one additional sample taken immediately following the peak capacity processing period.

[CGD 73–83, 40 FR 4624, Jan. 30, 1975, as amended by CGD 75–213, 41 FR 15326, Apr. 12, 1976]

§ 159.125 Visible floating solids: Type I devices.

During the sewage processing test (§ 159.121) 40 effluent samples of approximately 1 liter each shall be taken from a Type I device at the same time as samples taken in § 159.123 and passed expeditiously through a U.S. Sieve No. 12 as specified in ASTM E–11–70. The weight of the material retained on the screen after it has been dried to a constant weight in an oven at 103 °C. must be divided by the volume of the sample and expressed as milligrams per liter. This value must be 10 percent or less of the total suspended solids as determined in accordance with 40 CFR Part 136 or at least 38 of the 40 samples.

NOTE: 33 U.S.C. 1321(b)(3) prohibits discharge of harmful quantities of oil into or upon the navigable waters of the United States or adjoining shorelines or into or upon the waters of the contiguous zone. Under 40 CFR 110.3 and 110.4 such discharges of oil include discharges which:

(a) Violate applicable water quality standards, or

(b) Cause a film or sheen upon or discoloration of the surface of the water or adjoining shorelines or cause a sludge or emulsion to be deposited beneath the surface of the water or upon adjoining shorelines. If a sample

contains a quantity of oil determined to be harmful, the Coast Guard will not certify the device.

[CGD 73–83, 40 FR 4624, Jan. 30, 1975, as amended by CGD 75–213, 41 FR 15326, Apr. 12, 1976]

§159.126 Coliform test: Type II devices.

(a) The arithmetic mean of the fecal coliform bacteria in 38 of 40 samples of effluent from a Type II device during the test described in §159.121 must be 200 per 100 milliliters or less when tested in accordance with 40 CFR Part 136.

(b) The 40 samples must be taken from the device as follows: During each of the 10 test days, one sample must be taken at the beginning, middle and end of an 8-consecutive hour period with one additional sample taken immediately following the peak capacity processing period.

[CGD 75–213, 41 FR 15326, Apr. 12, 1976]

§159.126a Suspended solids test: Type II devices.

During the sewage processing test (§159.121) 40 effluent samples must be taken at the same time as samples are taken for §159.126 and they must be analyzed for total suspended solids in accordance with 40 CFR Part 136. The arithmetic mean of the total suspended solids in 38 of 40 of these samples must be less than or equal to 150 milligrams per liter.

[CGD 75–213, 41 FR 15326, Apr. 12, 1976]

§159.127 Safety coliform count: Recirculating devices.

Thirty-eight of forty samples of flush fluid from a recirculating device must have less than 240 fecal coliform bacteria per 100 milliliters. These samples must be collected in accordance with §159.123(b) and tested in accordance with 40 CFR Part 136.

[CGD 73–83, 40 FR 4624, Jan. 30, 1975, as amended by CGD 75–213, 41 FR 15326, Apr. 12, 1976]

§159.129 Safety: Ignition prevention test.

(a) Components of a device that are a potential ignition source in an explosive atmosphere must pass the test in paragraph (b) or (c) of this section or meet the requirements of paragraph (d) or have a specific warning in the instruction manual required by §159.57 that the device should not be installed in an explosive atmosphere.

(b) Components protected by vapor exclusion must be placed in a chamber filled with a rich mixture of gasoline or propane in air with the pressure being varied from 0 to 2 psig once an hour for 8 hours. Vapor readings must be taken in the void being protected and must indicate a leakage less than 20 percent of the lower explosive limit of the mixture in the chamber.

(c) Components providing ignition protection by means other than vapor exclusion must be fitted with an ignition source, such as a spark plug, and a means of injecting an explosive mixture of gasoline or propane and air into the void that protects the component. Connections must be made so as to minimize any additional volume added to the protected void by the apparatus delivering the explosive mixture. The component must be placed in a chamber filled with an explosive mixture and there must be no ignition of the explosive mixture surrounding the component when the following tests are conducted:

(1) Using any overload protection that is part of the device, the potential ignition source must be operated for one half hour at 110 percent of its rated voltage, one half hour at 50 percent of its rated voltage and one half hour at 100 percent of its rated voltage with the motor or armature locked, if the potential ignition source is a motor or part of a motor's electrical circuit.

(2) With the explosive mixture in the protected void, the test installed ignition source must be activated 50 times.

(3) The tests paragraphs (c) (1) and (2) of this section must be repeated with any plugs removed.

(d) Components that are certified as being intrinsically safe in accordance with the Instrument Society of America (RP 12.2) or explosion proof in accordance with the Underwriters Laboratories STD 698 in Class I, Group D hazardous locations (46 CFR 111.80–5(a)) need not be subjected to this testing.

§ 159.131 Safety: Incinerating device.

An incinerating device must not incinerate unless the combustion chamber is closed, must purge the combustion chamber of combustible fuel vapors before and after incineration must secure automatically if the burner does not ignite, must not allow an accumulation of fuel, and must neither produce a temperature on surfaces adjacent to the incineration chamber higher than 67 °C nor produce a temperature on surfaces in normal body contact higher than 41 °C when operating in an ambient temperature of 25 °C. Unitized incineration devices must completely burn to a dry, inert ash, a simultaneous defecation and urination and must not discharge fly ash, malodors, or toxic substances.

Subpart D—Recognition of Facilities

§ 159.201 Recognition of facilities.

A recognized facility is an independent laboratory accepted by the Coast Guard under 46 CFR 159.010 to perform the tests and inspections required under this part. A list of accepted laboratories is available from the Commandant (G–MSE–3).

[CGD 95–028, 62 FR 51194, Sept. 30, 1997, as amended by USCG–1999–5832, 64 FR 34715, June 29, 1999]

INDEX TO SUBCHAPTER O—POLLUTION

EDITORIAL NOTE: This listing is provided for informational purposes only. It is compiled and kept up-to-date by the Coast Guard, Department of Transportation.

Section

A

Addresses and Telephone Numbers of Coast Guard District Offices and EPA Regional Offices ..... Table 1
Administrative Regions of States and Corresponding Coast Guard District and EPA Regions ..... Table 2
Administration of the Pollution Fund
  Applicability 153.403
  Cost summary reports 153.415
  Deposit of money into the fund 153.413
  Liability to the pollution fund 153.405
  Payments or reimbursement from the pollution fund 153.407
  Procedures for payment of judgement 153.411
  Purpose 153.401
  Reimbursement for actions under section 311(c) or 311(d) of the Act of the Intervention on the High Seas Act 153.417
Appendices ..... Part 154
  A - Guidelines for Detonation Flame Arresters
  B - Standard Specification for Tank Vent Flame Arresters
  C - Guidelines for Determining and Evaluating Required Response Resources for Facility Response Plans
  D - Training Elements for Oil Spill Response Plans
Appendices ..... Part 155
  A - Specifications for Shore Connection
  B - Determining and Evaluating Required Response Resources for Vessel Response Plans
  C - Training Elements for Oil Spill Response Plans
Appendices ..... Part 157
  A - Damage Assumptions, Hypothetical Outflows, and Cargo Tank Size and Arrangements
  B - Subdivision and Stability Assumptions
  C - Procedure for Determining Distribution of Segregated Ballast Tanks to Provide Protection Against Oil Outflow in the Event of Grounding, Ramming, or Collision
  D - Example of a Procedure for Dedicated Clean Ballast Tank Operations
  E - Specifications for the Design, Installation and Operation of a Part Flow System for Control of Overboard Discharges
  F - Guidelines and Specifications for Oil Discharge Monitoring and Control Systems for Tankers
  G - Timetables for Application of Double Hull Requirements

B

Ballast Water Management for Control of Nonindigenous Species ..... Part 151-Subpart C
  Applicability 151.1502
  Ballast water management 151.1510

Ballast water management alternatives under extraordinary conditions....151.1514
Compliance monitoring....151.1516
Definitions....151.1504
Purpose....151.1500
Restriction of operation....151.1506
Revocation of clearance....151.1508
Vessel safety....151.1512

C

Certification Procedures....Part 159-Subpart B
Application for certification....159.14
Authorization to label devices....159.16
Certification....159.15
Certification of certain Type III devices....159.12a
Changes to certified devices....159.17
Purpose....159.11
Regulations for certification of existing devices....159.12
Control of pollution by oil and hazardous substances, discharge removal....Part 153
Criteria for Adequacy of Reception Facilities:
Garbage....Part 158-Subpart D
Capacity and exceptions....158.420
General....158.410
Purpose....158.400
Criteria for Adequacy of Reception Facilities:
Residues and Mixtures Containing Oil....Part 158-Subpart B
General....158.200
Ports and Terminals
Loading crude oil....158.210
Loading more than 1,000 metric tons of oil other than crude oil or bunker oil....158.220
Other than ports and terminals under §§158.210, 158.220, and 158.240....158.230
Ship repair yards....158.240
Standard discharge connection....158.250
Criteria for Certifying that a Port's or Terminal's
Facilities are Adequate for Receiving NLS Residue....Part 158-Subpart C
Ports and Terminals: Equipment....158.330
Purpose....158.300
Reception facilities: Capacity and exceptions....158.320
Reception facilities: General....158.310
Crude Oil Washing (COW) System on Tank Vessels....Part 157-Subpart D
Assistant Personnel....157.154
Cargo Tanks
Ballasting and crude oil washing....157.160
Drainage....157.134
Hydrocarbon vapor emissions....157.132
COW Operations
Changed characteristics....157.158
Crew member: Main deck watch....157.168
During a voyage....157.162
Equipment; Removal....157.170
General....157.155
Hydrocarbon emissions....157.166
Limitations on grades of crude oil carried....157.172
Meeting manual requirements....157.156

Person in charge 157.152
Use of inert gas system 157.164
With more than one grade of crude oil 157.130
COW System
Evidence for inspection 157.148
Tank washing machines 157.124
Documents; Required
Foreign tank vessels 157.118
U.S. tank vessels 157.116
Waiver of 157.120
Inspections
Evidence for inspections; COW 157.148
Letter of acceptance 157.106
Recording information after inspection 157.150
Similar tank design; Foreign tank vessels 157.147
Similar tank design; U.S. tank vessels 157.146
Tank vessels of the same class 157.144
Operations and Equipment Manual 157.138
Approved 157.112
Foreign tank vessel; Submission 157.110
Not approved 157.114
Recording information after inspection 157.150
U.S. tank vessel; Submission 157.108
Piping, valves, and fittings 157.122
Plans, submission
Foreign tank vessels 157.102
U.S. tank vessels 157.100
Pumps 157.126
Scale models 157.104
Two-way voice communications 157.136

D

Dedicated Clean Ballast Tanks on Tank Vessels ....Part 157-Subpart E
Alterations 157.218
Documents required for Foreign tank vessels 157.216; 157.202
Documents required for U.S. tank vessels 157.214
General 157.225
Isolating valves: Closed during a voyage 157.228
Letter of acceptance 157.204
Operations Manual 157.224
Approved manual 157.210
Foreign tank vessels; Submission 157.208
Not approved 157.212
Procedures to be followed 157.226
U.S. tank vessels; Submission 157.206
Plans: Submission ....
Foreign tank vessels 157.202
U.S. tank vessels 157.200
Pumps and piping arrangements 157.222
Standards for clean ballast tanks 157.220
Design, Construction, and Testing ....Subpart C
Access to parts 159.63
Baffles 159.81
Chemical level indicator 159.65
Conductors 159.73
Electrical component ratings 159.67
Electrical controls and conductors 159.71

General requirements 159.53
Identification 159.55
Independent supporting 159.93
Installation, operation, and maintenance instructions 159.57
Level indicator 159.83
Motor ratings 159.69
Overcurrent protection 159.75
Placard 159.59
Power interruption: Type I and II devices 159.89
Purpose and scope 159.51
Removal fittings 159.87
Safety 159.95
Coliform count: Recirculating devices 159.127
Incinerating device 159.131
Inspected vessels 159.97
Sewage removal 159.85
Suspended solids test: Type II devices 159.126a
Temperature range test 159.115
Terminals 159.79
Testing ..... Part 159-Subpart C
Chemical resistance test 159.117
Coliform test: Type I devices 159.123
Coliform test: Type II devices 159.126
General 159.101
Ignition prevention test 159.129
Operability test: Temperature range 159.119
Pressure and vacuum pulse test 159.111
Pressure test 159.109
Rolling test 159.107
Sewage processing test 159.121
Shock Test 159.105
Testing equivalency 159.19
Vibration test 159.103
Vents 159.61
Visible floating solids: Type I devices 159.125
Design, Equipment, and Installation ..... Part 157-Subpart B
Applicability 157.08
Cargo and ballast system information 157.23
Cargo monitor and control system 157.12
Cargo tank arrangement and size 157.19
Designated observation area 157.13
Discharges .....
Chemical additives 157.31
From tank barges exempted from certain discharge requirements 157.28
Of cargo residue 157.37
Of clean and segregated ballast: Seagoing tank vessels of 150 gross tons or more 157.43
Seagoing tank vessels of 150 gross tons or more 157.29
Tank vessels carrying oil exclusively on rivers, lakes, bays, sounds, and the Great Lakes, and seagoing tank vessels of less than 150 gross tons 157.27
Double hulls on tank vessels 157.10d
Oily residue tank 157.17
Pumping, piping, and discharge arrangements 157.11
Segregated Ballast Tanks .....
Crude oil washing systems for certain new vessels 157.10
Crude oil washing systems, and dedicated clean ballast tanks for certain new and existing vessels of 40,000 DWT or more 157.10a

Crude oil washing systems, and dedicated clean ballast Tanks for certain new and existing vessels of 20,000 to 40,000 DWT 157.10c
Dedicated clean ballast tanks, and special ballast arrangements for tank vessels transporting Outer Continental Shelf oil 157.10b
Slop tanks in tank vessels 157.15
Submission of calculations, plans, and specifications 157.24

E

Equipment ..... Part 155-Subpart B
Bilge slops discharges on oceangoing ships of 400 gross tons and above, but less than 10,000 gross tons, excluding ships that carry ballast water in their fuel oil tanks 155.360
Bilge Slops/Fuel Oil Tank Ballast Water Discharges .....
On oceangoing ships of less than 400 gross tons 155.350
On oceangoing ships of 10,000 gross tons and above and oceangoing ships of 400 gross tons and above that carry ballast water in their fuel oil tanks 155.370
On U.S, non-oceangoing ships 155.330
Containment of Oil and Hazardous Material Cargo Discharges 155.310
Damage Stability Information for:
Inland oil barges 155.245
Oil tankers and offshore oil barges 155.240
Definitions 155.200
Discharge Removal Equipment for Vessels:
Less than 400 feet in length 155.210
400 feet or greater in length 155.205
Carrying oil as secondary cargo 155.220
Inland oil barges 155.215
Emergency Towing Capability for:
Oil barges 155.230
Oil tankers 155.235
Fuel Oil and Bulk Lubricating Oil Discharge Containment 155.320
Internal Cargo Transfer Capability 155.225
Oily-water Separating Equipment, Bilge Alarm, and Bilge Monitor Approval Standards 155.380
Overfill Devices 155.480
Placard 155.450
Platform Machinery Space Drainage on Oceangoing Fixed and Floating Drilling Rigs and other Platforms 155.400
Prohibited Spaces 155.470
Pumping, Piping, and Discharge Requirements for:
Ocean-going ships of 100 gross tons and above, but Less than 400 gross tons 155.420
U.S. non-oceangoing ships of 100 gross tons and above 155.410
Segregation of Fuel Oil and Water Ballast on New Ocean-going Ships of 4,000 Gross Tons and above, other than Oil Tankers, and on New Oceangoing Oil Tankers of 150 Gross Tons and above 155.440
Standard Discharge Connections for Oceangoing Ships of 400 Gross Tons and above 155.430
Equipment Requirements ..... Part 154-Subpart C
Closure devices 154.520
Communications 154.560
Discharge containment equipment 154.545
Discharge removal 154.540
Emergency shutdown 154.550
Hose assemblies 154.500
Lighting 154.570

Loading arms 154.510
Monitoring devices 154.525
Small discharge containment 154.530
Exemption from §157.10a or §157.10c ..... Part 157-Subpart F
Applying for an exemption or requesting modification of an exemption 157.302
Exempted vessels: Operations 157.310
Granting, denying or modifying an exemption 157.306
Qualifications for exemptions under this part 157.300
Revocation of exemptions: Procedure and appeal 157.308

F

Facilities transferring oil or hazardous material in bulk ..... Part 154
Facility Operations ..... Part 154-Subpart D
Compliance with operations manual 154.750
General 154.700
Persons in charge:
Designation and qualifications 154.710
Evidence of designation 154.730
Records 154.740
Safety requirements 154.735

G

Garbage Pollution and Sewage ..... Part 151-Subpart A
Applicability 151.51
Exceptions for emergencies 151.77
Grinders or comminuters 151.75
Inspection for compliance and enforcement 151.61
[Reserved] 153.107
General ..... Parts, 151, 153, 154, 155, 157, 158, 159
Alteration 154.107
Appeals 157.06, 158.190
Applicability 151.03, 154.100, 155.100, 157.01, 158.110
Authorization of classification societies 157.04
CERCLA delegations 153.109
Certificate of Adequacy: Applying for 158.140
Certificate of Adequacy: Change of information 158.165
Certificate of Adequacy: Issuance and termination 158.160
Certificate of Adequacy: Ports and Terminals; Which must have 158.135
Definition 154.105
Definitions and acronyms 158.120
Definitions 151.05, 153.103, 155.110, 157.03, 159.3
Delegations 151.07, 158.130
Denial of entry 151.08
Equivalents 155.120, 157.07
Exemptions 154.108, 155.130
Facility examination 154.120
FWPCA delegations and redelegation 153.105
Incorporation by reference 154.106,155.140, 157.02
Letter of intent 154.110
Penalties for Violation 151.04, 158.115
Performing calculations for this part 157.05
Ports and Terminals; Which must provide facilities 158.133
Purpose 151.01, 153.101, 158.100, 159.1
Reception Facility Operations 158.163
Reporting inadequate reception facilities 158.167

Requirements for vessel manufacturers 159.5
Requirements for vessel operators 159.7
Revocation, Procedures after 158.180
Special areas 151.06
Suspension 158.174
Suspension: Actions during 158.178
Suspension: Effects of 158.176
Suspension: Grounds for 158.170
Suspension: Notification of 158.172
Waivers and alternative 158.150

I

Implementation of MARPOL 73/78 and the Protocol on Environmental Protection to the Antarctic Treaty as it Pertains to Pollution from Ships ..... Subpart A
Interim Measures for Certain Tank Vessels Without Double Hulls Carrying Animal or Vegetable Oils ..... Part 157-Subpart H
Operational measures 157.510
Purpose and applicability 157.500
Interim Measures for Certain Tank Vessels Without Double Hulls Carrying Other Non-Petroleum Oils ..... Part 157-Subpart I
Operational measures 157.610
Purpose and applicability 157.600
Interim Measures for Certain Tank Vessels Without Double Hulls Carrying Petroleum Oils ..... Part 157-Subpart G
Additional operational requirements for tank barges 157.460
Autopilot alarm or indicator 157.440
Bridge resource management policy and procedures 157.415
Emergency lightering requirements for oil tankers 157.410
Enhanced survey requirements 157.430
Maneuvering and vessel status information 157.450
Maneuvering performance capability 157.445
Minimum under-keel clearance 157.455
Purpose and applicability 157.400
Vessel specific watch policy and procedures 157.420
Vital systems surveys 157.435

L

Lightering Zones and Operational Requirements for the Gulf of Mexico ..... Part 156-Subpart C
Designated lightering zones 156.300
Gulmex No. 2 ..... 156.300(b)
Offshore Pascagoula No. 2 ..... 156.300(c)
South Sabine Point ..... 156.300(d)
Southtex ..... 156.300(a)
Helicopter Operations ..... 156.330(c)
Maximum operating conditions 156.320
Operations 156.330
Prohibited areas 156.310
Claypile ..... 156.310(a)
Ewing ..... 156.310(c)
Flower Garden ..... 156.310(b)

M

Marine sanitation devices ..... Part 159

N

Notice of the Discharge of Oil or Hazardous Substance ..... Part 153-Subpart B
Fines 153.205
Procedure for the notice of discharge 153.203
Purpose 153.201
Noxious Liquid Substance Pollution
Applicability 151.30
Categories
A, B, C, and D; reporting spills of NLS 151.45
A, B, C, and D NLS; requirements for oceangoing ships 151.31
C and D Oil-like NLSs allowed for carriage 151.49
C Oil-like NLS; certificates needed to carry 151.33
C and D Oil-like NLSs; operating requirements for ocean-going ships with IOPP Certificates 151.41
D NLS and Category D Oil-like NLS 151.35
D NLS; operating requirements 151.39
D NLSs other than oil-like Category D NLSs that may be carried under this Subpart 151.47
NLS residues, control of discharge 151.43
Obtaining an Attachment for NLS to the IOPP Certificate and obtaining an NLS Certificate 151.37

O

Oil and hazardous material transfer operations ..... Part 156-Subpart A
Alternatives 156.107
Applicability 156.100
Compliance with suspension order 156.113
Connection 156.130
Declaration of Inspection 156.150
Definitions 156.105
Discharge cleanup 156.125
Equipment tests and inspections 156.170
Exemptions 156.110
Incorporation by reference 156.111
Person in Charge
Limitations 156.115
Supervision 156.160
Suspension order 156.112
Transfer
Advance notice 156.118
Requirements 156.120
Oil or hazardous material pollution prevention regulations for vessels ..... Part 155
Oil Pollution
Applicability 151.09
Control of discharge of oil 151.10
Exceptions for emergencies 151.11
Foreign ships 151.29
Inspections for compliance and enforcement 151.23
International Oil Pollution Prevention (IOPP) Certificates 151.19
Oil Record Book 151.25
Operating Requirements: Discharge of garbage
From fixed or floating platforms 151.73
In the navigable water prohibited 151.66
Outside special areas 151.69
Within special areas 151.71

Operating Requirements: Discharge of plastic prohibited 151.67
Operating requirements: Discharge of sewage within Antarctica 151.79
Operations Manual ..... Part 154-Subpart B
Amendment 154.320
Contents 154.310
General 154.300
Procedures for examination 154.325

P

Placards 151.59
Plans
Review and revision 151.28
Submission and approval 151.27
Reporting requirements 151.15
Shipboard oil pollution emergency plans 151.26
Special areas for Annex of MARPOL 73/78 ..... 151.13
Surveys 151.17
Ports and terminal operations ..... Part 158-Subpart E
Draining cargo area and piping systems 158.500
Following the instruction manual 158.520

R

Reception facilities for oil, noxious liquid substances (nls), and garbage ..... Part 158
Recognition of Facilities
Application 159.201
Criteria for recognition 159.205
Recordkeeping requirements 151.55
Reporting requirements 151.65
Removal of Discharged Oil ..... Part 153
Applicability 153.303
Methods and procedures for the removal of discharged oil 153.305
Penalties 153.307
Purpose 153.301
Response Plans for Animal Fats and Vegetable
Oils Facilities ..... Part 154-Subpart H
Development and evaluation criteria for facilities that handle, store, or transport animal fats and vegetable oils 154.1225
Methods of ensuring the availability of response resources by contract or other approved means 154.1228
Purpose and applicability 154.1210
Submission requirements 154.1220
Response Plans for Oil Facilities ..... Part 154-Subpart F
Appeal process 154.1075
Applicability 154.1015
Deficiencies 154.1070
Definitions 154.1020
Exercises 154.1055
Facility classification by COTP 154.1016
General response plan contents 154.1030
Inspection and maintenance of response resources 154.1057
Methods of ensuring the availability of response resources by contract or other approved means 154.1028
Operating restrictions and interim operating authorization 154.1025
Plan review and revision procedures 154.1065
Qualified individual and alternate qualified individual 154.1026
Response plan development and evaluation criteria for facilities that

handle, store, or transport Group I through Group IV petroleum oils 154.1045
Response plan development and evaluation criteria for facilities that handle, store, or transport Group V petroleum oils 154.1047
Specific requirements for facilities that could reasonably be expected to cause significant and substantial harm to the environment 154.1035
Specific requirements for facilities that could reasonably be expected to cause substantial harm to the environment 154.1040
Specific response information to be maintained on mobile MTR facilities 154.1041
Submission and approval procedures 154.1060
Worst case discharge 154.1029
Response Plans for Other Non-Petroleum Oil Facilities ..... Part 154-Subpart I
Purpose and applicability 154.1310
Response plan development and evaluation criteria for facilities that handle, store, or transport other non-petroleum oils 154.1325
Response plan submission requirements 154.1320
Response Plan Requirements ..... Part 155-Subpart D
Applicability 155.1015
Definitions 155.1020
Development and Evaluation Criteria for Vessels Carrying:
Groups I through IV petroleum oil as a primary cargo 155.1050
Group V petroleum oil as a primary cargo 155.1052
Exercises 155.1060
General response plan requirements 155.1030
Inspection and Maintenance of Response Resources 155.1062
Manned Vessels Carrying Oil as a Primary Cargo 155.1035
Plans
Review, Revision, Amendment, and Appeal 155.1070
Submission, Approval, Requests for Acceptance of Alternative Planning Criteria, and Appeal 155.1065
Qualified Individual and Alternate Qualified Individual 155.1026
Training 155.1055
Unmanned Tank Barges Carrying Oil as a Primary Cargo 155.1040
Vessels Carrying Oil as a Secondary Cargo 155.1045
Response Plan Requirements for Vessels Carrying Animal Fats and Vegetable Oils as a Primary Cargo ..... Part 155-Subpart F
Development and Evaluation Criteria 155.1230
Purpose and Applicability 155.1210
Submission Requirements 155.1225
Response Plan Requirements for Vessels Carrying Other Non-Petroleum Oils as a Primary Cargo ..... Part 155-Subpart G
Plan Development and Evaluation Criteria 155.2230
Purpose and Applicability 155.2210
Submission Requirements 155.2225
Rules for the protection of the marine environment relating to tank vessels carrying oil in bulk ..... Part 157

S

Shipboard control of garbage 151.63
Special areas for Annex V of MARPOL 73/78 ..... 151.53
Special areas for the purpose of Annex II 151.32
Special Requirements for Lightering of Oil and Hazardous Material Cargoes ..... Part 156-Subpart B
Applicability 156.200
Definitions 156.205

General 156.210
Lightering Zones
Designation 156.225
Factors considered 156.230
Pre-arrival Notices 156.215
Reporting of Incidents 156.220

T

Tankers Loading Cargo at a Facility Permitted under the Trans-Alaska Pipeline Authorization Act (TAPAA) ..... Part 155-Subpart E
Additional Requirements 155.1125
Definitions 155.1115
Development and Evaluation Criteria 155.1135
Operating Restrictions and Interim Operating uthorization 155.1120
Pre-positioned Response Equipment 155.1130
Purpose and Applicability 155.1110
Revision and Amendment Procedures 155.1115
Submission and Approval Procedures 155.1145
Transfer Personnel, Procedures, Equipment, and Records ..... Part 155-Subpart C
Closure Devices 155.805
Communications 155.785
Deck Lighting 155.790
Draining into bilges 155.770
Emergency Shutdown 155.780
Maximum Cargo Level of Oil 155.775
Person in Charge 155.700
Designation 155.700
Qualifications 155.710
Records 155.820
Tank Vessel 155.815
Integrity 155.815
Security 155.810
Transfer Hose 155.800
Transfer Procedures 155.720
Amendments 155.760
Availability 155.740
Compliance 155.730
Contents 155.750
Transportation of Municipal and Commercial Waste ..... Part 151-Subpart B
Appeals 151.1021
Applicability 151.1003
Applying for a conditional permit 151.1012
Definitions 151.1006
Display of number 151.1024
Issuing or denying the issuance of a conditional permit 151.1015
Purpose 151.1000
Transportation of municipal or commercial waste 151.1009
Withdrawal of a conditional permit 151.1018
Trans Alaska Pipeline Authorization Act (TAPAA) Facility Operating in Prince William Sound, Alaska ..... Part 154-Subpart G
Additional response plan requirements 154.1125
Definitions 154.1115
Operating restrictions and interim operating authorization 154.1120
Purpose and applicability 154.1110
Requirements for pre-positioned response equipment 154.1130
Response plan development and evaluation criteria 154.1135
TAPAA facility contracting with a vessel 154.1140

V

Vapor Control Systems
Applicability 154.800
Application for acceptance as a certifying entity 154.806
Definitions 154.802
Detonation arresters, flame arresters, and flame screens 154.822
Fire, explosion, and detonation protection 154.820
Inerting, enriching, and diluting systems 154.824
Operational requirements 154.850
Personnel training 154.840
Review, certification,, and initial inspection 154.804
Vapor compression and blowers 154.826
Vapor control system, general 154.808
Vapor line connections 154.810
Vapor recovery and vapor destruction units 154.828
Vessel liquid overfill protection, facility requirements 154.812
Vessel vapor over pressure an vacuum protection 154.814
Vessels carrying oil, noxious liquid substances, garbage, municipal or commercial waste, and ballast water ..... Part 151
Vessel Operation
Applicability 157.25
Ballast added to cargo tanks 157.35
Discharges of/from
Cargo residue 157.37
Chemical additives 157.31
Seagoing tank vessels of 150 gross tons or more 157.29
Tank vessels carrying oil exclusively on rivers, lakes, bays, sounds, and the Great Lakes, and seagoing tank vessels of less than 150 gross tons 157.27
Tank barges exempted from certain design requirements 157.28
Of clean and segregated ballast: Seagoing tank vessels of 150 gross tons or more 157.43
Emergencies 157.41
Information for master 157.47
Instruction manual 157.49
Machinery space bilges 157.39
Operation of a tank vessel in violation of regulations 157.26
Valves in cargo or ballast piping system 157.45

W

Waste management plans 151.57

SUBCHAPTER P—PORTS AND WATERWAYS SAFETY

PART 160—PORTS AND WATERWAYS SAFETY—GENERAL

Subpart A—General

Sec.
160.1 Purpose.
160.3 Definitions.
160.5 Delegations.
160.7 Appeals.

Subpart B—Control of Vessel and Facility Operations

160.101 Purpose.
160.103 Applicability.
160.105 Compliance with orders.
160.107 Denial of entry.
160.109 Waterfront facility safety.
160.111 Special orders applying to vessel operations.
160.113 Prohibition of vessel operation and cargo transfers.
160.115 Withholding of clearance.

Subpart C—Notifications of Arrivals, Departures, Hazardous Conditions, and Certain Dangerous Cargoes

160.201 Applicability and exceptions to applicability.
160.203 Definitions.
160.205 Waivers.
160.207 Notice of arrival: Vessels bound for ports or places in the United States.
160.209 [Reserved]
160.211 Notice of arrival: Vessels carrying certain dangerous cargo.
160.213 Notice of departure: Vessels carrying certain dangerous cargo.
160.215 Notice of hazardous conditions.

Subpart D—Year 2000 (Y2K) Preparedness Reporting for Certain Vessels and Marine Facilities

160.301 What is the purpose of this subpart?
160.303 When is this subpart effective?
160.305 To which vessels and facilities does this subpart apply?
160.307 Which vessels and facilities are exempt from this subpart?
160.309 What definitions apply to this subpart?
160.311 What are the Year 2000 (Y2K) peak risk periods?
160.313 What are the Year 2000 (Y2K) reporting requirements for vessels owned in the United States?
160.315 What are the Year 2000 (Y2K) reporting requirements for foreign flag vessels?
160.317 What are the Year 2000 (Y2K) reporting requirements for marine facilities?
APPENDIX A TO SUBPART D OF PART 160—UNITED STATES COAST GUARD VESSEL QUESTIONNAIRE
APPENDIX B TO SUBPART D OF PART 160—UNITED STATES COAST GUARD MARINE FACILITY QUESTIONNAIRE

AUTHORITY: 33 U.S.C. 1223, 1231; 49 CFR 1.46. Subpart D is also issued under the authority of 33 U.S.C. 1225 and 46 U.S.C. 3715.

SOURCE: CGD 79–026, 48 FR 35404, Aug. 4, 1983, unless otherwise noted.

Subpart A—General

§ 160.1 Purpose.

(a) This subchapter contains regulations implementing the Ports and Waterways Safety Act (33 U.S.C. 1221) and related statutes.

§ 160.3 Definitions.

For the purposes of this subchapter:

Bulk means material in any quantity that is shipped, stored, or handled without the benefit of package, label, mark or count and carried in integral or fixed independent tanks.

Captain of the Port means the Coast Guard officer designated by the Commandant to command a Captain of the Port Zone as described in part 3 of this chapter.

Commandant means the Commandant of the United States Coast Guard.

Commanding Officer, Vessel Traffic Services means the Coast Guard officer designated by the Commandant to command a Vessel Traffic Service (VTS) as described in part 161 of this chapter.

Deviation means any departure from any rule in this subchapter.

District Commander means the Coast Guard officer designated by the Commandant to command a Coast Guard District as described in part 3 of this chapter.

ETA means estimated time of arrival.

Length of Tow means, when towing with a hawser, the length in feet from the stern of the towing vessel to the stern of the last vessel in tow. When pushing ahead or towing alongside, length of tow means the tandem length in feet of the vessels in tow excluding the length of the towing vessel.

Person means an individual, firm, corporation, association, partnership, or governmental entity.

State means each of the several States of the United States, the District of Columbia, the Commonwealth of Puerto Rico, Guam, American Samoa, the United States Virgin Islands, the Trust Territories of the Pacific Islands, the Commonwealth of the Northern Marianas Islands, and any other commonwealth, territory, or possession of the United States.

Tanker means a self-propelled tank vessel constructed or adapted primarily to carry oil or hazardous materials in bulk in the cargo spaces.

Tank Vessel means a vessel that is constructed or adapted to carry, or that carries, oil or hazardous material in bulk as cargo or cargo residue.

Vehicle means every type of conveyance capable of being used as a means of transportation on land.

Vessel means every description of watercraft or other artificial contrivance used, or capable of being used, as a means of transportation on water.

Vessel Traffic Services (VTS) means a service implemented under Part 161 of this chapter by the United States Coast Guard designed to improve the safety and efficiency of vessel traffic and to protect the environment. The VTS has the capability to interact with marine traffic and respond to traffic situations developing in the VTS area.

Vessel Traffic Service Area or *VTS Area* means the geographical area encompassing a specific VTS area of service as described in Part 161 of this chapter. This area of service may be subdivided into sectors for the purpose of allocating responsibility to individual Vessel Traffic Centers or to identify different operating requirements.

NOTE: Although regulatory jurisdiction is limited to the navigable waters of the United States, certain vessels will be encouraged or may be required, as a condition of port entry, to report beyond this area to facilitate traffic management within the VTS area.

VTS Special Area means a waterway within a VTS area in which special operating requirements apply.

[CGD 90–020, 59 FR 36323, July 15, 1994]

§ 160.5 Delegations.

(a) District Commanders and Captains of the Ports are delegated the authority to establish safety zones.

(b) Under the provisions of §§ 6.04–1 and 6.04–6 of this chapter, District Commanders and Captains of the Ports have been delegated authority to establish security zones.

(c) Under the provisions of § 1.05–1 of this chapter, District Commanders have been delegated authority to establish regulated navigation areas.

(d) Subject to the supervision of the cognizant Captain of the Port and District Commander, Commanding Officers, Vessel Traffic Services are delegated authority under 33 CFR 1.01–30 to discharge the duties of the Captain of the Port that involve directing the operation, movement, and anchorage of vessels within a Vessel Traffic Service area including management of vessel traffic within anchorages, regulated navigation areas and safety zones, and to enforce Vessel Traffic Service and ports and waterways safety regulations. This authority may be exercised by Vessel Traffic Center personnel. The Vessel Traffic Center may, within the Vessel Traffic Service area, provide information, make recommendations, or, to a vessel required under Part 161 of this chapter to participate in a Vessel Traffic Service, issue an order, including an order to operate or anchor as directed; require the vessel to comply with orders issued; specify times of entry, movement or departure; restrict operations as necessary for safe operation under the circumstances; or take other action necessary for control of the vessel and the safety of the port or of the marine environment.

[CGD 79–026, 48 FR 35404, Aug. 4, 1983, as amended by CGD 88–037, 53 FR 21815, June 10, 1988; CGD 90–020, 59 FR 36324, July 15, 1994]

§ 160.7 Appeals.

(a) Any person directly affected by a safety zone or an order or direction issued under this subchapter may request reconsideration by the official who issued it or in whose name it was issued. This request may be made orally or in writing, and the decision of the official receiving the request may be rendered orally or in writing.

(b) Any person directly affected by the establishment of a safety zone or by an order or direction issued by, or on behalf of, a Captain of the Port may appeal to the District Commander through the Captain of the Port. The appeal must be in writing, except as allowed under paragraph (d) of this section, and shall contain complete supporting documentation and evidence which the appellant wishes to have considered. Upon receipt of the appeal, the District Commander may direct a representative to gather and submit documentation or other evidence which would be necessary or helpful to a resolution of the appeal. A copy of this documentation and evidence is made available to the appellant. The appellant is afforded five working days from the date of receipt to submit rebuttal materials. Following submission of all materials, the District Commander issues a ruling, in writing, on the appeal.Prior to issuing the ruling, the District Commander may, as a matter of discretion, allow oral presentation on the issues.

(c) Any person directly affected by the establishment of a safety zone or by an order or direction issued by a District Commander, or who receives an unfavorable ruling on an appeal taken under paragraph (b) of this section, may appeal through the District Commander to the Assistant Commandant for Marine Safety and Environmental Protection, U.S. Coast Guard, Washington, DC 20593. The appeal must be in writing, except as allowed under paragraph (d) of this section. The District Commander forwards the appeal, all the documents and evidence which formed the record upon which the order or direction was issued or the ruling under paragraph (b) of this section was made, and any comments which might be relevant, to the Assistant Commandant for Marine Safety and Environmental Protection. A copy of this documentation and evidence is made available to the appellant. The appellant is afforded five working days from the date of receipt to submit rebuttal materials to the Assistant Commandant for Marine Safety and Environmental Protection. The decision of the Assistant Commandant for Marine Safety and Environmental Protection is based upon the materials submitted, without oral argument or presentation. The decision of the Assistant Commandant for Marine Safety and Environmental Protection is issued in writing and constitutes final agency action.

(d) If the delay in presenting a written appeal would have significant adverse impact on the appellant, the appeal under paragraphs (b) and (c) of this section may initially be presented orally. If an initial presentation of the appeal is made orally, the appellant must submit the appeal in writing within five days of the oral presentation to the Coast Guard official to whom the presentation was made. The written appeal must contain, at a minimum, the basis for the appeal and a summary of the material presented orally. If requested, the official to whom the appeal is directed may stay the effect of the action while the ruling is being appealed.

[CGD 79–026, 48 FR 35404, Aug. 4, 1983, as amended by CGD 88–052, 53 FR 25122, July 1, 1988; CGD 96–026, 61 FR 33668, June 28, 1996; CGD 97–023, 62 FR 33364, June 19, 1997]

Subpart B—Control of Vessel and Facility Operations

§ 160.101 Purpose.

This subpart describes the authority exercised by District Commanders and Captains of the Ports to insure the safety of vessels and waterfront facilities, and the protection of the navigable waters and the resources therein. The controls described in this subpart are directed to specific situations and hazards.

§ 160.103 Applicability.

(a) This subpart applies to any—

(1) Vessel on the navigable waters of the United States, except as provided in paragraphs (b) and (c) of this section;

(2) Bridge or other structure on or in the navigable waters of the United States; and

(3) Land structure or shore area immediately adjacent to the navigable waters of the United States.

(b) This subpart does not apply to any vessel on the Saint Lawrence Seaway.

(c) Except pursuant to international treaty, convention, or agreement, to which the United States is a party, this subpart does not apply to any foreign vessel that is not destined for, or departing from, a port or place subject to the jurisdiction of the United States and that is in:

(1) Innocent passage through the territorial sea of the United States;

(2) Transit through the navigable waters of the United States which form a part of an international strait.

§ 160.105 Compliance with orders.

Each person who has notice of the terms of an order issued under this subpart must comply with that order.

§ 160.107 Denial of entry.

Each District Commander or Captain of the Port, subject to recognized principles of international law, may deny entry into the navigable waters of the United States or to any port or place under the jurisdiction of the United States, and within the district or zone of that District Commander or Captain of the Port, to any vessel not in compliance with the provisions of the Port and Tanker Safety Act (33 U.S.C. 1221–1232) or the regulations issued thereunder.

§ 160.109 Waterfront facility safety.

(a) To prevent damage to, or the destruction of, any bridge or other structure on or in the navigable waters of the United States, or any land structure or shore area immediately adjacent to such waters, and to protect the navigable waters and the resources therein from harm resulting from vessel or structure damage, destruction, or loss, each District Commander or Captain of the Port may:

(1) Direct the handling, loading, unloading, storage, and movement (including the emergency removal, control and disposition) of explosives or other dangerous articles and substances, including oil or hazardous material as those terms are defined in 46 U.S.C. 2101 on any structure on or in the navigable waters of the United States, or any land structure or shore area immediately adjacent to those waters; and

(2) Conduct examinations to assure compliance with the safety equipment requirements for structures.

[CGD 79–026, 48 FR 35404, Aug. 4, 1983, as amended by USCG–1998–3799, 63 FR 35531, June 30, 1998]

§ 160.111 Special orders applying to vessel operations.

Each District Commander or Captain of the Port may order a vessel to operate or anchor in the manner directed when:

(a) The District Commander or Captain of the Port has reasonable cause to believe that the vessel is not in compliance with any regulation, law or treaty;

(b) The District Commander or Captain of the Port determines that the vessel does not satisfy the conditions for vessel operation and cargo transfers specified in § 160.113; or

(c) The District Commander or Captain of the Port has determined that such order is justified in the interest of safety by reason of weather, visibility, sea conditions, temporary port congestion, other temporary hazardous circumstances, or the condition of the vessel.

§ 160.113 Prohibition of vessel operation and cargo transfers.

(a) Each District Commander or Captain of the Port may prohibit any vessel, subject to the provisions of chapter 37 of Title 46, U.S. Code, from operating in the navigable waters of the United States, or from transferring cargo or residue in any port or place under the jurisdiction of the United States, and within the district or zone of that District Commander or Captain of the Port, if the District Commander or the Captain of the Port determines that the vessel's history of accidents, pollution incidents, or serious repair problems creates reason to believe that the vessel may be unsafe or pose a threat to the marine environment.

(b) The authority to issue orders prohibiting operation of the vessels or transfer of cargo or residue under paragraph (a) of this section also applies if the vessel:

(1) Fails to comply with any applicable regulation;

(2) Discharges oil or hazardous material in violation of any law or treaty of the United States;

(3) Does not comply with applicable vessel traffic service requirements;

(4) While underway, does not have at least one licensed deck officer on the navigation bridge who is capable of communicating in the English language.

(c) When a vessel has been prohibited from operating in the navigable waters of the United States under paragraphs (a) or (b) of this section, the District Commander or Captain of the Port may allow provisional entry into the navigable waters of the United States, or into any port or place under the jurisdiction of the United States and within the district or zone of that District Commander or Captain of the Port, if the owner or operator of such vessel proves to the satisfaction of the District Commander or Captain of the Port, that the vessel is not unsafe or does not pose a threat to the marine environment, and that such entry is necessary for the safety of the vessel or the persons on board.

(d) A vessel which has been prohibited from operating in the navigable waters of the United States, or from transferring cargo or residue in a port or place under the jurisdiction of the United States under the provisions of paragraph (a) or (b)(1), (2) or (3) of this section, may be allowed provisional entry if the owner or operator proves, to the satisfaction of the District Commander or Captain of the Port that has jurisdiction, that the vessel is no longer unsafe or a threat to the environment, and that the condition which gave rise to the prohibition no longer exists.

[CGD 79–026, 48 FR 35404, Aug. 4, 1983, as amended by CGD 96–026, 61 FR 33668, June 28, 1996; USCG–1998–3799, 63 FR 35531, June 30, 1998]

§ 160.115 Withholding of clearance.

Each District Commander or Captain of the Port may request the Secretary of the Treasury, or the authorized representative thereof, to withhold or revoke the clearance required by 46 U.S.C. App. 91 of any vessel, the owner or operator of which is subject to any penalties under 33 U.S.C. 1232.

[CGD 79–026, 48 FR 35404, Aug. 4, 1983; 48 FR 39059, Aug. 29, 1983, as amended by USCG–1998–3799, 63 FR 35531, June 30, 1998]

Subpart C—Notifications of Arrivals, Departures, Hazardous Conditions, and Certain Dangerous Cargoes

§ 160.201 Applicability and exceptions to applicability.

(a) This subpart prescribes notification requirements for U.S. and foreign vessels bound for or departing from ports or places in the United States.

(b) This part does not apply to recreational vessels under 46 U.S.C. 4301 *et seq.* and, except § 160.215, does not apply to:

(1) Passenger and supply vessels when they are employed in the exploration for or in the removal of oil, gas, or mineral resources on the continental shelf, and

(2) Oil Spill Recovery Vessels (OSRVs) when engaged in actual spill response operations or during spill response exercises.

(c) Section 160.207 does not apply to the following:

(1) Each vessel of 300 gross tons or less, except a foreign vessel of 300 gross tons or less entering any port or place in the Seventh Coast Guard District as described by 3.35–1(b) of this chapter.

(2) Each vessel operating exclusively within a Captain of the Port zone.

(3) Each vessel operating upon a route that is described in a schedule that is submitted to the Captain of the Port for each port or place of destination listed in the schedule at least 24 hours in advance of the first date and time of arrival listed on the schedule and contains:

(i) Name of the vessel;

(ii) Country of registry of the vessel;

(iii) Call sign of the vessel;

(iv) International Maritime Organization (IMO) international number or, if the vessel does not have an assigned IMO international number, the official number of the vessel;

(v) Name of the registered owner of the vessel;

(vi) Name of the operator of the vessel;

(vii) Name of the classification society of the vessel;

(viii) Each port or place of destination;

(ix) Estimated dates and times of arrivals at and departures from these ports or places; and

(x) Name and telephone number of a 24-hour point of contact.

(4) Each vessel arriving at a port or place under force majeure.

(5) Each vessel entering a port of call in the United States in compliance with the Automated Mutual Assistance Vessel Rescue System (AMVER).

(6) Each vessel entering a port of call in the United States in compliance with the U.S. Flag Merchant Vessel Locator Filing System (USMER).

(7) Each barge.

(8) Each public vessel.

(9) United States or Canadian flag vessels, except tank vessels or vessels carrying certain dangerous cargo, which operate solely on the Great Lakes.

(d) Sections 160.207, 160.211, and 160.213 apply to each vessel upon the waters of the Mississippi River between its mouth and mile 235, Lower Mississippi River, above Head of Passes. Sections 160.207, 160.211, and 160.213 do not apply to each vessel upon the waters of the Mississippi River between its sources and mile 235, above Head of Passes, and all the tributaries emptying thereinto and their tributaries, and that part of the Atchafalaya River above its junction with the Plaquemine-Morgan City alternate waterway, and the Red River of the North.

[CGD 79–026, 48 FR 35404, Aug. 4, 1983, as amended by CGD 86–055, 54 FR 14078, Apr. 7, 1989; CGD 96–026, 61 FR 33669, June 28, 1996; CGD 94–089, 61 FR 50234, Sept. 25, 1996]

§ 160.203 Definitions.

As used in this subpart:

Agent means any person, partnership, firm, company or corporation engaged by the owner or charterer of a vessel to act in their behalf in matters concerning the vessel.

Carried in bulk means a commodity that is loaded or carried on board a vessel without containers or labels and received and handled without mark or count.

Certain dangerous cargo includes any of the following:

(a) Division 1.1 or 1.2 (explosive) materials, as defined in 49 CFR 173.50.

(b) Oxidizing materials or blasting agents for which a permit is required under 49 CFR 176.415.

(c) Highway route controlled quantity radioactive material, as defined in 49 CFR 173.403(1), or Fissile Class III shipments of fissile radioactive material, as defined in 49 CFR 173.455(a)(3).

(d) Each cargo under Table 1 of 46 CFR Part 153 when carried in bulk.

(e) Any of the following when carried in bulk:

Acetaldehyde
Ammonia, anhydrous
Butadiene
Butane
Butene
Butylene Oxide
Chlorine
Ethane
Ethylene
Ethylene Oxide
Methane
Methyl Acetylene, Propadiene Mixture, Stabilized
Methyl Bromide
Methyl Chloride
Phosphorous, elemental
Propane
Propylene
Sulfur Dioxide
Vinyl Chloride

Great Lakes means Lakes Superior, Michigan, Huron, Erie, and Ontario, their connecting and tributary waters, the Saint Lawrence River as far as Saint Regis, and adjacent port areas.

Gross tons means the tonnage determined by the tonnage authorities of a vessel's flag state in accordance with the national tonnage rules in force before the entry into force of the International Convention on Tonnage Measurement of Ships, 1969 (''Convention''). For a vessel measured only under Annex I of the Convention, gross tons means that tonnage. For a vessel measured under both systems, the higher gross tonnage is the tonnage used for the purposes of the 300-gross-ton threshold.

Hazardous condition means any condition that may adversely affect (1) the safety of any vessel, bridge, structure, or shore area or (2) the environmental quality of any port, harbor, or navigable waterway of the United States. It

may—but need not—involve collision, allision, fire, explosion, grounding, leaking, damage, injury or illness of a person aboard, or manning-shortage.

Operator means any person including, but not limited to, an owner, a demise-(bareboat-) charterer, or another contractor who conducts, or is responsible for, the operation of a vessel.

Port or place of departure means any port or place in which a vessel is anchored or moored.

Port or place of destination means any port or place to which a vessel is bound to anchor or moor.

Public vessel means a vessel that is owned or demise- (bareboat-) chartered by the government of the United States, by a State or local government, or by the government of a foreign country and that is not engaged in commercial service.

[CGD 79–026, 48 FR 35404, Aug. 4, 1983, as amended by CGD 84–039, 50 FR 8614, Mar. 4, 1985; 50 FR 9426, Mar. 8, 1985; CGD 94–027, 59 FR 39459, Aug. 3, 1994; CGD 92–050, 59 FR 39966, Aug. 5, 1994; CGD 94–089, 61 FR 50234, Sept. 25, 1996; USCG–1999–5832, 64 FR 34715, June 29, 1999]

§ 160.205 Waivers.

The Captain of the Port may waive, within that Captain of the Port's designated zone, any of the requirements of this subpart for any vessel or class of vessels upon finding that the vessel, route, area of operations, conditions of the voyage, or other circumstances are such that application of this subpart is unnecessary or impractical for purposes of safety, environmental protection, or national security.

§ 160.207 Notice of arrival: Vessels bound for ports or places in the United States.

(a) The owner, agent, master, operator, or person in charge of a vessel on a voyage of 24 hours or more shall report under paragraph (c) of this section at least 24 hours before entering the port or place of destination.

(b) The owner, agent, master, operator, or person in charge of a vessel on a voyage of less than 24 hours shall report under paragraph (c) of this section before departing the port or place of departure.

(c) The Captain of the Port of the port or place of destination in the United States must be notified of:

(1) Name of the vessel;

(2) Country of registry of the vessel;

(3) Call sign of the vessel;

(4) International Maritime Organization (IMO) international number or, if the vessel does not have an assigned IMO international number, the official number of the vessel;

(5) Name of the registered owner of the vessel;

(6) Name of the operator of the vessel;

(7) Name of the classification society of the vessel;

(8) Name of the port or place of departure;

(9) Name of the port or place of destination;

(10) Estimated date and time of arrival at this port or place; and

(11) Name and telephone number of a 24-hour point of contact.

(d) *International Safety Management (ISM) Code (Chapter IX of SOLAS) Notice.* If you are the owner, agent, master, operator, or person in charge of a vessel that is 500 gross tons or more and engaged on a foreign voyage to the United States, you must provide the ISM Code notice described in paragraph (e) as follows:

(1) *ISM Code notice beginning January 26, 1998, if your vessel is*—a passenger vessel carrying more than 12 passengers, a tank vessel, a bulk freight vessel, or a high-speed freight vessel.

(2) *ISM Code notice beginning January 1, 2002, if your vessel is*—a freight vessel not listed in paragraph (d)(1) or a self-propelled mobile offshore drilling unit (MODU).

(e) *Content and Manner of ISM Code Notice.*

(1) ISM Code notice includes the following:

(i) The date of issuance for the company's Document of Compliance certificate that covers the vessel.

(ii) The date of issuance for the vessel's Safety Management Certificate, and,

(iii) The name of the Flag Administration, or the recognized organization(s) representing the vessel flag administration, that issued those certificates.

(2) If you meet the criteria in paragraph (d) of this section, you must give the ISM Code notice to the Coast Guard Captain of the Port of the port or place of your destination in the U.S. at least 24 hours before you enter the port or place of destination. The ISM Code notice may be combined and provided with the report required by paragraph (a) of this section.

[CGD 79–026, 48 FR 35404, Aug. 4, 1983, as amended by CGD 86–055, 54 FR 14078, Apr. 7, 1989; CGD 94–027, 59 FR 39460, Aug. 3, 1994; CGD 91–045, 59 FR 40189, Aug. 5, 1994; CGD 94–089, 61 FR 50234, Sept. 25, 1996; CGD 97–067, 62 FR 65206, Dec. 11, 1997; 63 FR 5458, Feb. 3, 1998; CGD 97–067, 63 FR 44117, Aug. 17, 1998]

§ 160.209 [Reserved]

§ 160.211 Notice of arrival: Vessels carrying certain dangerous cargo.

(a) The owner, agent, master, operator, or person in charge of a vessel, except a barge, bound for a port or place in the United States and carrying certain dangerous cargo, shall notify the Captain of the Port of the port or place of destination at least 24 hours before entering that port or place of the:

(1) Name of the vessel;

(2) Country of registry of the vessel;

(3) Call sign of the vessel;

(4) International Maritime Organization (IMO) international number or, if the vessel does not have an assigned IMO international number, the official number of the vessel;

(5) Name of the registered owner of the vessel;

(6) Name of the operator of the vessel;

(7) Name of the classification society of the vessel;

(8) Name of the port or place of departure;

(9) Name of the port or place of destination;

(10) Estimated date and time of arrival at this port or place;

(11) Name and telephone number of a 24-hour point of contact;

(12) Location of the vessel at the time of the report;

(13) Name of each of the certain dangerous cargoes carried;

(14) Amount of each of the certain dangerous cargoes carried;

(15) Stowage location of each of the certain dangerous cargoes carried; and

(16) Operational condition of the equipment under § 164.35 of this chapter.

(b) The owner, agent, master, operator, or person in charge of a barge bound for a port or place in the United States carrying certain dangerous cargo shall report the information required in paragraphs (a)(1) through (a)(4) and (a)(8) through (16) of this section to the Captain of the Port of the port or place of destination at least 4 hours before entering that port or place.

[CGD 79–026, 48 FR 35404, Aug. 4, 1983, as amended by CGD 86–055, 54 FR 14078, Apr. 7, 1989; CGD 94–027, 59 FR 39460, Aug. 3, 1994; CGD 94–089, 61 FR 50234, 50235, Sept. 25, 1996]

§ 160.213 Notice of departure: Vessels carrying certain dangerous cargo.

(a) The owner, agent, master, operator, or person in charge of a vessel, except a barge, departing from a port or place in the United States for any other port or place and carrying certain dangerous cargo, shall notify the Captain of the Port or place of departure at least 24 hours before departing, unless this notification was made within 2 hours after the vessel's arrival, of the:

(1) Name of the vessel;

(2) Country of registry of the vessel;

(3) Call sign of the vessel;

(4) International Maritime Organization (IMO) international number or, if the vessel does not have an assigned IMO international number, the official number of the vessel;

(5) Name of the registered owner of the vessel;

(6) Name of the operator of the vessel;

(7) Name of the classification society of the vessel;

(8) Name of the port or place of departure;

(9) Name of the port or place of destination;

(10) Estimated date and time of arrival at this port or place;

(11) Name and telephone number of a 24-hour point of contact;

(12) Name of each of the certain dangerous cargoes carried;

(13) Amount of each of the certain dangerous cargoes carried;

(14) Stowage location of each of the certain dangerous cargoes carried; and

(15) Operational condition of the equipment under §164.35 of this chapter.

(b) The owner, agent, master, operator, or person in charge of a barge departing from a port or place in the United States for any other port or place and carrying certain dangerous cargo shall report the information required in paragraphs (a)(1) through (a)(4) and (a)(8) through (15) of this section to the Captain of the Port of the port or place of departure at least 4 hours before departing, unless this report was made within 2 hours after the barge's arrival.

[CGD 79–026, 48 FR 35404, Aug. 4, 1983, as amended by CGD 86–055, 54 FR 14078, Apr. 7, 1989; CGD 94–027, 59 FR 39460, Aug. 3, 1994; CGD 94–089, 61 FR 50235, Sept. 25, 1996]

§160.215 Notice of hazardous conditions.

Whenever there is a hazardous condition either aboard a vessel or caused by a vessel or its operation, the owner, agent, master, operator, or person in charge shall immediately notify the nearest Coast Guard Marine Safety office or Group office. (Compliance with this section does not by itself discharge the duty of compliance with 46 CFR 4.05–10.)

[CGD 94–027, 59 FR 39460, Aug. 3, 1994]

Subpart D—Year 2000 (Y2K) Preparedness Reporting for Certain Vessels and Marine Facilities

AUTHORITY: 33 U.S.C. 1223, 1231; 49 CFR 1.46. Subpart D is also issued under the authority of 33 U.S.C. 1225 and 46 U.S.C. 3715.

SOURCE: By USCG–1998–4819, 64 FR 33412, June 23, 1999, unless otherwise noted.

EFFECTIVE DATE NOTE: At 64 FR 33412, June 23, 1999, Subpart D is added to part 160, effective July 23, 1999 until Mar. 31, 2000.

§160.301 What is the purpose of this subpart?

This subpart contains temporary regulations implementing the Ports and Waterways Safety Act (33 U.S.C. 1221 *et seq.*) and related statutes. The information collected as a result of these temporary regulations will help Captains of the Port assess vessel and marine facility preparedness for potential Year 2000-related malfunctions.

§160.303 When is this subpart effective?

This subpart is effective from July 23, 1999 through March 31, 2000.

§160.305 To which vessels and facilities does this subpart apply?

This subpart applies to:

(a) Vessels owned in the United States and foreign flag vessels operating on waters subject to the jurisdiction of the U.S. between August 1, 1999, and March 31, 2000;

(b) Vessels owned in the United States and foreign flag vessels engaged in lightering operations under part 156 of this title on the navigable waters of the United States or in the marine environment;

(c) Vessels inspected under Chapter 33 of Title 46 United States Code; and

(d) Marine facilities as defined in §160.309.

§160.307 Which vessels and facilities are exempt from this subpart?

The following vessels and facilities are exempt from this subpart:

(a) Recreational vessels under 46 U.S.C. 4301 *et seq.*;

(b) Public vessels;

(c) Uninspected commercial fishing vessels;

(d) Uninspected barges;

(e) Foreign flag vessels engaged in innocent passage;

(f) Uninspected passenger vessels; and

(g) Facilities directly operated by the Department of Defense or under the authority of the Department of the Interior.

§160.309 What definitions apply to this subpart?

As used in this subpart:

Agent means any person, partnership, firm, company, or corporation engaged by the owner or charterer of the vessel to act in their behalf in matters concerning the vessel.

Facility Representative means the owner, operator, person in charge, or

employee of a marine facility who is responsible for the facility's Y2K preparedness.

Marine facility means any facility designated by the following:

(1) 33 CFR 125.07 or 126.01 as a Waterfront Facility;

(2) 33 CFR 126.05 as a Designated Waterfront Facility;

(3) 33 CFR 127.005 as a Waterfront Facility Handling Liquefied Hazardous Gas (LNG) or Liquefied Natural Gas (LNG);

(4) 33 CFR 148.3 as a Deepwater Port;

(5) 33 CFR 154.105 as a Facility, Mobile Facility, or Offshore Facility; or

(6) 33 CFR 154.1020 as a Marine Transportation-related Facility.

Marine Facility Questionnaire means ''IMO Year 2000 Questionnaire 3 (IMO circular letter 2121, Appendix 3) and U.S. Supplement 2'' for marine facilities.

Midnight means the last moment or end of a calendar day, i.e., 2400 hours local time on a 24-hour clock.

Operating means vessels underway, conducting cargo loading/transfer operations, or carrying passengers, or facilities conducting cargo loading/transfer operations with vessels.

Operator means any person including, but not limited to, an owner, a demise or bareboat charterer, or a contractor who conducts, or is responsible for, the operation of a vessel.

Port or place of departure means any port or place in which a vessel is anchored or moored.

Port or place of destination means any port or place to which a vessel is bound to anchor or moor.

Recreational vessel means a vessel being used only for pleasure as defined in 46 U.S.C. 2101(25).

Vessel includes every description of watercraft or other artificial contrivance used, or capable of being used, as a means of transportation on water.

Vessel owned in the United States means any vessel documented or numbered under the laws of the United States; and, any vessel owned by a citizen of the United States that is not documented or numbered by any nation.

Vessel Questionnaire means ''IMO Year 2000 Questionnaire 2 (IMO circular letter 2121, Appendix 2) and U.S. Supplement 1'' for vessels.

Vessel Representative means the owner, agent, master, operator, person in charge, or other person responsible for a vessel's or fleet's Y2K preparedness.

Year 2000 (Y2K) preparedness means checking for the proper operation of systems that include, but are not limited to, power generation equipment, steering and propulsion, loading and unloading equipment, and alarms into the next century on all potential risk dates; preparing for the Y2K risk dates which may require updating software and hardware and replacing systems, subsystems, or components; and determining that other computer-based systems' data exchanges internal or external to the company's, vessel's, or marine facility's will also correctly function before, into, and during the Year 2000.

§ 160.311 What are the Year 2000 (Y2K) peak risk periods?

The Y2K peak risk periods are:

(a) Between midnight September 7, 1999, and midnight September 9, 1999;

(b) Between midnight December 30, 1999, and midnight January 1, 2000; and

(c) Between midnight February 27, 2000, and midnight February 29, 2000.

§ 160.313 What are the Year 2000 (Y2K) reporting requirements for vessels owned in the United States?

(a) The vessel representative of a vessel owned in the United States must submit the following information—

(1) If your vessel will operate during any of the peak risk periods identified in § 160.311, you must submit a Vessel Questionnaire, as contained in Appendix A to this subpart, so that it is received by the U.S. Coast Guard no later than August 1, 1999.

(2) If your vessel will not operate during any of the peak risk periods identified in § 160.311, but will operate during the period August 1, 1999, through March 31, 2000, you must submit U.S. Supplement 1 (page 3 of the Vessel Questionnaire as contained in Appendix A to this subpart) so that it is received by the U.S. Coast Guard no later than August 1, 1999.

(b) You must submit the information required by paragraph (a) of this section to the U.S. Coast Guard by one of the following means.

(1) By mail to: United States Coast Guard (MOC/Y2K), c/o The Centech Group, 2000 N. 14th Street, Suite 700, Arlington, VA 22201;

(2) By fax to: 1–800–825–4357; or

(3) Electronically via the Internet at: http://www.ucsg.mil/hq/g-m/y2k.htm.

(c) You may submit one copy of the IMO Year 2000 Questionnaire 2 (page 2 of the Vessel Questionnaire contained in Appendix A to this subpart) on behalf of your entire fleet if the same information provided in the IMO Year 2000 Questionnaire 2 applies to all vessels within the fleet, unless circumstances as described in paragraphs (f) or (g) of this section apply. You must still complete a U.S. Supplement 1 for each vessel operating between August 1, 1999, and March 31, 2000.

(d) For vessels described in paragraph (a)(1) of this section, you must notify the U.S. Coast Guard, through the completion of a Vessel Questionnaire contained in Appendix A to this subpart. The information required to complete the questionnaire includes:

(1) Name of person completing the questionnaire;

(2) Company contact personnel and address, phone number, facsimile number (if available), and electronic mail address (if available);

(3) Vessel's name;

(4) Vessel's type;

(5) Cargo type;

(6) Vessel's gross tonnage;

(7) Vessel's Flag State;

(8) Vessel's IMO or Official Number;

(9) Captain of the Port zone(s) the vessel may be operating in from August 1, 1999, through March 31, 2000.

(10) Status of Y2K preparedness.

(e) For vessels described in paragraph (a)(2) of this section, you must notify the U.S. Coast Guard, through the completion of a U.S. Supplement 1 (page 3 of the Vessel Questionnaire contained in Appendix A to this subpart). The information required to complete the supplement includes:

(1) Name of person completing the questionnaire;

(2) Company contact personnel and address, phone number, facsimile number (if available), and electronic mail address (if available);

(3) Vessel's name;

(4) Vessel's type;

(5) Cargo type;

(6) Vessel's gross tonnage;

(7) Vessel's Flag State;

(8) Vessel's IMO or Official Number;

(9) Captain of the Port zone(s) the vessel may be operating in from August 1, 1999, through March 31, 2000.

(f) If the Y2K preparedness or operational plans of your vessel(s) changes after the initial submission of a Vessel Questionnaire or U.S. Supplement 1, you must submit an updated or new Vessel Questionnaire or updated U.S. Supplement 1 by the means described in paragraph (b) of this section.

(g) If you submit a new or updated Vessel Questionnaire, as contained in Appendix A to this subpart, during any of the peak risk periods identified in § 160.311, you must submit the information to the Captain of the Port for each port or place of destination the vessel will operate in instead of by one of the means described in paragraph (b) of this section.

§ 160.315 What are the Year 2000 (Y2K) reporting requirements for foreign flag vessels?

(a) The vessel representative of a foreign flag vessel must submit the following information—

(1) If your vessel will operate on waters subject to the jurisdiction of the U.S. during any of the peak risk periods identified § 160.311, you must submit a Vessel Questionnaire, as contained in Appendix A to this subpart, so that it is received by the U.S. Coast Guard no later than 24 hours prior to arrival in a U.S. port or U.S. place of destination.

(2) If your vessel will not operate on waters subject to the jurisdiction of the U.S. during any of the peak risk periods identified in § 160.311, but will operate on waters subject to the jurisdiction of the U.S. during the period August 1, 1999, through March 31, 2000, you must submit U.S. Supplement 1 (page 3 of the Vessel Questionnaire as contained in Appendix A to this subpart) so that it is received by the U.S. Coast Guard no later than 24 hours prior to

arrival in a U.S. port or U.S. place of destination.

(b) You must submit the information required by paragraph (a) of this section to the U.S. Coast Guard by one of the following means:

(1) By mail to: United States Coast Guard (MOC/Y2K), c/o The Centech Group 2000 N. 14th Street, Suite 700, Arlington, VA 22201;

(2) By fax to: 1–800–825–4357; or

(3) Electronically via the Internet at: http://www.ucsg.mil/hq/g-m/y2k.htm.

(c) You may submit one copy of the IMO Year 2000 Questionnaire 2 (page 2 of the Vessel Questionnaire contained in Appendix A to this subpart) on behalf of your entire fleet if the same information provided in the IMO Year 2000 Questionnaire 2 applies to all vessels within the fleet, unless circumstances as described in paragraphs (f) or (g) of this section apply. You must still complete a U.S. Supplement 1 for each vessel operating on waters subject to the jurisdiction of the U.S. between August 1, 1999, and March 31, 2000.

(d) For vessels described in paragraph (a)(1) of this section, you must notify the U.S. Coast Guard, through the completion of a Vessel Questionnaire contained in Appendix A to this subpart. The information required to complete the questionnaire includes:

(1) Name of person completing the questionnaire;

(2) Company contact personnel and address, phone number, facsimile number (if available), and electronic mail address (if available);

(3) Vessel's name;

(4) Vessel's type;

(5) Cargo type;

(6) Vessel's gross tonnage;

(7) Vessel's Flag State;

(8) Vessel's IMO or Official Number;

(9) Captain of the Port zone(s) the vessel may be operating in from August 1, 1999, through March 31, 2000.

(10) Status of Y2K preparedness.

(e) For vessels described in paragraph (a)(2) of this section, you must notify the U.S. Coast Guard, through the completion of a U.S. Supplement 1 (page 3 of the Vessel Questionnaire contained in Appendix A to this subpart). The information required to complete the supplement includes:

(1) Name of person completing the questionnaire;

(2) Company contact personnel and address, phone number, facsimile number (if available), and electronic mail address (if available);

(3) Vessel's name;

(4) Vessel's type;

(5) Cargo type;

(6) Vessel's gross tonnage;

(7) Vessel's Flag State;

(8) Vessel's IMO or Official Number;

(9) Captain of the Port zone(s) the vessel may be operating in from August 1, 1999, through March 31, 2000.

(f) If the Y2K preparedness or operational plans of your vessel(s) changes after the initial submission of a Vessel Questionnaire or U.S. Supplement 1, you must submit an updated or new Vessel Questionnaire or updated U.S. Supplement 1 by the means described in paragraph (b) of this section.

(g) If you submit a new or updated Vessel Questionnaire, as contained in Appendix A to this subpart, during any of the peak risk periods identified in § 160.311, you must submit the information to the Captain of the Port for each port or place of destination the vessel will operate in instead of by one of the means described in paragraph (b) of this section.

§ 160.317 What are the Year 2000 (Y2K) reporting requirements for marine facilities?

(a) The facility representative of a marine facility must submit the following information—

(1) If your marine facility will operate during any of the peak risk periods identified § 160.311, you must submit a Marine Facility Questionnaire, as contained in Appendix B to this subpart, so that it is received by the U.S. Coast Guard no later than August 1, 1999.

(2) If your marine facility will not operate during any of the peak risk periods identified in § 160.311, but will operate during the period August 1, 1999, through March 31, 2000, you must submit U.S. Supplement 2 (page 3 of the Marine Facility Questionnaire as contained in Appendix B to this subpart) so that it is received by the U.S. Coast Guard no later than August 1, 1999.

(b) You must submit the information required by paragraph (a) of this section to the U.S. Coast Guard by one of the following means:

(1) By mail to: United States Coast Guard (MOC/Y2K), c/o The Centech Group, 2000 N. 14th Street, Suite 700, Arlington, VA 22201;

(2) By fax to: 1–800–825–4357; or

(3) Electronically via the Internet at: http://www.ucsg.mil/hq/g-m/y2k.htm.

(c) For marine facilities described in paragraph (a)(1) of this section, you must notify the U.S. Coast Guard, through the completion of a Marine Facility Questionnaire contained in Appendix B to this subpart. The information required to complete the questionnaire includes:

(1) Captain of the Port zone the facility is located in;

(2) Name of facility;

(3) Type(s) of facility;

(4) Name of company;

(5) Name and title of person providing Y2K preparedness information;

(6) Company contact personnel and address, phone number, facsimile number (if available), and electronic mail address (if available); and

(7) Status of Y2K preparedness.

(d) For marine facilities described in paragraph (a)(2) of this section, you must notify the U.S. Coast Guard, through the completion of a U.S. Supplement 2 (page 3 of the Marine Facility Questionnaire contained in Appendix B to this subpart). The information required to complete the supplement includes:

(1) Captain of the Port zone the facility is located in;

(2) Name of facility;

(3) Type(s) of facility;

(4) Name of company;

(5) Name and title of person providing Y2K preparedness information; and

(6) Company contact personnel and address, phone number, facsimile number (if available), and electronic mail address (if available).

(f) If the Y2K preparedness or operational plans of your marine facility changes after the initial submission of a Marine Facility Questionnaire or U.S. Supplement 2, you must submit an updated or new Marine Facility Questionnaire or updated U.S. Supplement 2 by the means described in paragraph (b) of this section.

(g) If you submit a new or updated Marine Facility Questionnaire, as contained in Appendix B to this subpart, during any of the peak risk periods identified in §160.311, you must submit the information to the Captain of the Port for the place the facility operates in instead of by one of the means described in paragraph (b) of this section.

APPENDIX A TO SUBPART D OF PART 160—UNITED STATES COAST GUARD VESSEL QUESTIONNAIRE

OMB Approval No. 2115-0639

United States Coast Guard Vessel Questionnaire

[IMO Year 2000 Questionnaire 2 and United States Supplement 1]

Instructions

- Please complete this vessel questionnaire as fully as possible and submit to the U.S. Coast Guard via:

Mail: U. S. Coast Guard (G-MOC/Y2K) c/o The Centech Group 2000 N. 14th Street Suite 700 Arlington, VA 22201	**OR**	**Fax:** 1-800-825-4357	**OR**	Complete the questionnaire and supplement on the Coast Guard's Internet web site at: http://www.uscg.mil/hq/g-m/y2k.htm

- You must submit this vessel questionnaire such that it is received by:

U.S. Vessels:	Foreign Vessels arriving in U.S. Waters:
August 1, 1999	24 hours prior to 1st arrival after August 1, 1999

- The peak risk periods are: Midnight (2400) Sept 7, 1999, through midnight (2400) Sept 9, 1999, **AND** Midnight Dec 30, 1999, through midnight Jan 1, 2000 **AND** Midnight Feb 27, 2000 through midnight February 29, 2000.
- If your vessel or fleet of vessels **will** be operating in U.S. waters during any of the peak risk periods, you must submit at least one vessel questionnaire. If you operate a fleet of vessels which all have the same Y2K preparedness status, you may submit one IMO Questionnaire 2 for all vessels in that fleet. However, you must complete a U.S. Supplement 1 for each individual vessel in your fleet. The following examples are provided:

  1. Company A has 5 vessels and the same answers to the questions in IMO Questionnaire 2 apply to all 5 vessels. Company A must submit 5 U.S. Supplements (1 for each vessel) but may submit one IMO questionnaire 2 that covers all 5 vessels.

  2. Company B also has 5 vessels; however, each vessel has different answers to the questions in the IMO questionnaire. Company B must submit 5 U.S Supplements (1 for each vessel) and 5 IMO Questionnaire 2s (1 for each vessel).

- If your vessel **will not** be operating in U.S. waters during any of the peak risk periods, but **will** be operating in U.S. waters from August 1, 1999, through March 31, 2000, you need only complete the U.S. Supplement 1 and submit it to the Coast Guard via one of the methods outlined above by the appropriate date. You do not have to complete the IMO Year 2000 Questionnaire 2.
- If a vessel's Y2K preparedness or its operational plans change, please submit an updated questionnaire and supplement via mail/fax or update the information via the Internet. **Any new or updated vessel questionnaires submitted during the peak risk periods must be submitted directly to the Captain of the Port (COTP) in whose zone the vessel is operating instead of the locations specified above.** A list of COTP addresses and fax numbers is on page 4.
- **Data items on the IMO Questionnaire 2 marked with an asterisk (*) do not need to be filled in if the questionnaire is being submitted to the U.S. Coast Guard since the U.S. Supplement addresses similar information.**
- For the purpose of this questionnaire, operating means a vessel is underway, conducting cargo loading/transfer operations, or carrying passengers.
- Please DO NOT SUBSTITUTE Y2K-related contingency plans, brochures, policy statements or similar documents for this questionnaire and supplement. If you have questions about the questionnaire and/or supplement, contact the Coast Guard Office of Compliance at: Commandant (G-MOC), 2100 2nd Street SW, Washington DC 20593-0001; tel: 202-267-2978; fax: 202-267-4349.

An agency may not conduct nor sponsor, and a person is not required to respond to, a collection of information unless it displays a valid OMB control number. The valid OMB control number for this collection is: 2115-0639.

The Coast Guard estimates it will take averages of 8 minutes to complete and submit Questionnaire 2, and 5 minutes to complete and submit Supplement 1. You may submit any comments concerning the accuracy of this burden estimate or any suggestions for reducing the burden to: Commandant (G-MOC), U.S. Coast Guard, Washington, DC 20593-001.

IMO YEAR 2000 QUESTIONNAIRE 2

From: (Port Authority/Terminal Operator) United States Coast Guard

To: (Name of Ships) _____

Please answer the following as fully as you can. Your response to this questionnaire will assist the Port Authority/Terminal Operator in deciding whether due care has been exercised in avoiding possible equipment failure caused by Year 2000 electronic date recognition problems, and in putting in place contingency plans to cope with unforeseen failures.

Company: _____

Ship's IMO Number *: _____ **Flag *:** _____

Tonnage (gross) *: _____ **Ship Type (e.g. ro-ro, cargo) *:** _____

Date/time of expected arrival/departure *: _____

	Circle as appropriate	
1) Does your company have a documented Year 2000 policy in place?	YES	NO
2) Has an inventory check to identify and categorize potentially non-compliant equipment been carried out?	YES	NO
3) Has equipment critical to the operational safety of the ship(s) been investigated, and have appropriate remedial actions been carried out with regard to:		
- Navigational Systems?	YES	NO
- Propulsion and Power Generation Systems?	YES	NO
- Cargo Handling Equipment?	YES	NO
- Other Safety Equipment?	YES	NO
4) Are records of Year 2000 compliance, and/or the results of equipment tests/investigations documented?	YES	NO
5) Are the above documents available onboard the ships for inspection by the port authority/terminal operator?	YES	NO
6) Do the ships have a documented Year 2000 specific contingency plan, including competent personnel to implement it?	YES	NO
7) Has the ships' Year 2000 contingency plan been tested and reviewed to confirm its effectiveness?	YES	NO
8) Has the ships' equipment not currently in use, but critical to safe operation of the ship, been checked to establish that its functionality has not been affected?	YES	NO
9) Has all necessary information been exchanged and agreed with the above named port/terminal on any additional Year 2000 specific requirements applicable to ship operations in the port?	YES	NO

Name of the Master *: _____

Signature of the Master *: _____

Date: _____

UNITED STATES SUPPLEMENT 1 TO IMO YEAR 2000 QUESTIONNAIRE 2

In addition to the IMO Year 2000 Questionnaire 2, please answer the following as fully as you can for each individual vessel arriving in, operating in, or residing at U.S. ports from August 1, 1999 through March 31, 2000.

Name of the Person Completing Questionnaire: _____

Address: _____

_____

_____

Phone: _____

Fax: _____

Email: _____

Vessel Name: _____

Vessel Type (check one):

___ Oil Tanker (single hull) ___ Oil Tanker (double hull) ___ Ore/Bulk/Oil (OBO) ___ LPG Carrier ___ LNG Carrier ___ Chemical Tanker

___ Bulk Carrier ___ Containership ___ Ro-Ro Cargo ___ General Cargo ___ Passenger ___ Offshore Supply

___ MODU Other: _____

Cargo (check one):

___ Cargo of Particular Hazard (33 CFR 126) ___ Liquefied Hazardous Gas (LHG) ___ Bulk HAZMAT (liquid or solid) ___ Bulk Oil

___ 150 or more passengers ___ 7 to 149 passengers ___ 1 to 6 passengers ___ Other

Gross Tonnage: _____ **Flag:** _____ **IMO or Official Number:** _____

Captain of the Port zone you may be operating in (check "yes" for the dates that the vessel may be in each COTP zone. If needed, attach a separate sheet to list additional COTP zones. Refer to page 4 for a list of COTP zones):

Captain of the Port Zone:	Sept 7, 1999 – Sept 9, 1999	Dec 30, 1999 – Jan 1, 2000	Feb 27, 2000 – Feb 29, 2000	Any other dates Aug 1, 1999 - Mar 31, 2000
	___ Yes	___ Yes	___ Yes	___ Yes
	___ Yes	___ Yes	___ Yes	___ Yes
	___ Yes	___ Yes	___ Yes	___ Yes
	___ Yes	___ Yes	___ Yes	___ Yes
	___ Yes	___ Yes	___ Yes	___ Yes

Please answer the following question	Circle as appropriate	
1) If you were required to complete IMO Questionnaire 2 and answered yes to question #6 of that questionnaire, does the contingency plan call for the following when the vessel is underway:		
• Two or more additional trained crew on board during the risk periods?	YES	NO
• Anchor detail set and anchor ready for letting go during the risk periods?	YES	NO
• Manning the engine room with engine and generator alarm systems in manual override mode during the risk periods?	YES	NO
• Setting the steering in manual mode (disengaging automatic pilot) during the risk periods?	YES	NO
• Enabling the ship for mechanical steering at rudder post and manning the steering compartment during the risk periods?	YES	NO

Marine Safety Offices (MSOs)/Captains of the Port

MSO Portland 103 Commercial Street Portland, ME 04101-4726 PHONE: (207) 780-3681 FAX: (207) 780-3567	MSO Boston 455 Commercial Street Boston, MA 02109-1045 PHONE: (617) 223-3435 FAX: (617) 223-3032	MSO Providence 20 Risho Avenue East Providence, RI 02914-1208 PHONE: (401) 435-2350 FAX: (401) 435-2382	Group/MSO Long Island Sound 120 Woodward Avenue New Haven, CT 06512-3698 PHONE: (203) 468-4401 FAX: (203) 468-4445
USCG Activities New York Prevention/Compliance Division 212 Coast Guard Drive Staten Island, NY 10305 PHONE: (718) 354-4207 FAX: (718) 354-4301	Coast Guard Activities Baltimore 2401 Hawkins Point Road Baltimore, MD 21226-1791 PHONE: (410) 576-2693 FAX: (410) 962-0930	MSO Hampton Roads Norfolk Federal Building, 200 Granby Street Norfolk, VA 23510-1888 PHONE: (757) 441-3300 FAX: (757) 441-3262	MSO Wilmington 272 N. Front Street, Suite 500 Wilmington, NC 28401-3907 PHONE: (910) 815-4895 ext. 107 FAX: (910) 815-4523
MSO/Group Philadelphia 1 Washington Avenue Philadelphia, PA 19147-4395 PHONE: (215) 271-4806 FAX: (215) 271-4833	MSO Miami P.O. Box 01-6940 Miami, FL 33101-6940 PHONE: (305) 535-8705 FAX: (305) 535-8742	MSO Jacksonville 7820 Arlington Expressway, Suite 400 Jacksonville, FL 32211-7445 PHONE: (904) 232-2640 ext. 106 FAX: (904) 232-2664	MSO Tampa 155 Columbia Drive Tampa, FL 33606-3598 PHONE: (813) 228-2189 FAX: (813) 228-2399
MSO Savannah 222 W. Ogelthorpe Avenue, Suite 402 Savannah, GA 31401-3606 PHONE: (912) 652-4353 FAX: (912) 652-4180	MSO Charleston 196 Tradd Street Charleston, SC 29401-1899 PHONE: (843) 724-7684 FAX: (843) 720-7750	MSO San Juan P.O. Box 9023666 San Juan, PR 00902-3666 PHONE: (787) 729-6800 ext.303 FAX: (787) 729-6648	MSO New Orleans 1615 Poydras Street New Orleans, LA 70112-1254 PHONE: (504) 589-4256 FAX: (504) 589-7470
MSO Morgan City 800 David Drive Morgan City, LA 70380-1304 PHONE: (504) 380-5312 FAX: (504) 385-1687	MSO Corpus Christi 400 Mann Street, Suite 210 Corpus Christi, TX 78401-2046 PHONE: (512) 888-3162 FAX: (512) 888-3115	MSO Houston-Galveston P.O. Box 446 Galena Park, TX 77547-0446 PHONE: (713) 671-5100 ext. 0 FAX: (713) 671-5177	MSO Mobile P.O. Box 2924 150 N. Royal Street Mobile, AL 36652-2924 PHONE: (334) 441-5121 FAX: (334) 441-6169
MSO Port Arthur Federal Building 2875 Jimmy Johnson Boulevard Port Arthur , TX 77640-2099 PHONE: (409) 723-6509 ext. 251 FAX: (409) 723-6534	MSO St. Louis 1222 Spruce Street, Suite 8.104E St. Louis, MO 63103-2835 PHONE: (314) 539-3091 ext. 281 FAX: (314) 539-2659	MSO Huntington 1415 6th Avenue Huntington, WV 25701-2420 PHONE: (304) 529-5432 FAX: (304) 529-5051	MSO Louisville 600 Martin Luther King, Jr. Pl., Room 360 Louisville, KY 40202-2230 PHONE: (502) 582-5194 ext. 39 FAX: (502) 582-6825
MSO Memphis 200 Jefferson Avenue, Suite 1301 Memphis, TN 38103-2300 PHONE: (901) 544-3941 ext. 226 FAX: (901) 544-3886	MSO Paducah 225 Tully Street Paducah, KY 42003-1582 PHONE: (502) 442-1621 FAX: (502) 442-1633	MSO Pittsburgh Kossman Building, Suite 1150 100 Forbes Avenue Pittsburgh, PA 15222-1371 PHONE: (412) 644-5808 ext. 115 FAX: (412) 644-3479	MSO Buffalo 1 Fuhrman Boulevard Buffalo, NY 14230 PHONE: (716) 843-9570 FAX: (716) 843-9571
MSO Chicago 215 W. 83rd Street, Suite D Burr Ridge, IL 60521 PHONE: (630) 986-2155 FAX: (630) 986-2120/2174	MSO Cleveland 1055 E. 9th Street Cleveland, OH 44114 PHONE: (216) 522-4405 FAX: (216) 522-3290	MSO Detroit 110 Mt. Elliot Avenue Detroit, MI 48207 PHONE: (313) 568-9580 FAX: (313) 568-9581	MSO Duluth 600 S. Lake Avenue, Canal Park Duluth, MN 55802-2352 PHONE: (218) 720-5286 FAX: (218) 720-5258
MSO Milwaukee 2420 S. Lincoln Memorial Drive Milwaukee, WI 53207-1997 PHONE: (414) 747-7155 FAX: (414) 747-7890	MSO Toledo Federal Building 234 Summit Street, Room 501 Toledo, OH 43604 PHONE: (419) 259-6372 FAX: (419) 259-6374	MSO Sault Ste. Marie 337 Water Street Sault Ste. Maire, MI 49783 PHONE: (906) 635-3223 FAX: (906) 635-3321	MSO Long Beach 165 N. Pico Avenue Long Beach, CA 90802-1096 PHONE: (562) 980-4447 FAX: (562) 980-4413
MSO San Diego 2716 N. Harbor Drive San Diego, CA 92101-1064 PHONE: (619) 683-6477 FAX: (619) 683-6504	MSO San Francisco Building 14, Coast Guard Island Alameda, CA 94501-5100 PHONE: (510) 437-3082 FAX: (510) 437-3072	MSO Puget Sound 1519 Alaskan Way South, Building 1 Seattle, WA 98134-1192 PHONE: (206) 217-6232 FAX: (206) 217-6345	MSO Portland 6767 N. Basin Avenue Portland, OR 97217-3992 PHONE: (503) 240-9301 FAX: (503) 240-9302
MSO Honolulu 433 Ala Moana Boulevard Honolulu, HI 96813-4909 PHONE: (808) 522-8252 FAX: (808) 522-8271	MARSEC/MSO Guam PSC 455, Box 176 FPO AP, 95-6540-1056 PHONE: (671) 339-2001 ext.164 FAX: (671) 339-2005	MSO Juneau 2760 Sherwood Lane, Suite 2A Juneau, AK 99801-8545 PHONE: (907) 463-2464 FAX: (907) 463-2445	MSO Anchorage 510 L Street, Suite 100 Anchorage, AK 99501-1946 PHONE: (907) 271-6724 FAX: (907) 271-6751
MSO Valdez P.O. Box 486 105 South Clifton Valdez, AK 99686-0486 PHONE: (907) 835-7205 FAX: (907) 835-7207			

The geographic boundaries for all Captain of the Port Zones are contained in 33 CFR part 3.

APPENDIX B TO SUBPART D OF PART 160—UNITED STATES COAST GUARD MARINE FACILITY QUESTIONNAIRE

OMB Approval No. 2115-0639

United States Coast Guard Marine Facilities Questionnaire

[IMO Year 2000 Questionnaire 3 and United States Supplement 2]

Instructions

- Please complete this marine facility questionnaire as fully as possible and submit to the U.S. Coast Guard via:

Mail: U. S. Coast Guard (G-MOC/Y2K) c/o The Centech Group 2000 N. 14th Street Suite 700 Arlington, VA 22201	OR	**Fax:** 1-800-825-4357	OR	Complete the questionnaire and supplement on the Coast Guard's Internet web site at: **http://www.uscg.mil/hq/g-m/y2k.htm**

- You must submit all portions of this questionnaire required for your facility so that they are received by **August 1, 1999**. If your facility **will not** conduct cargo loading/transfer operations on any of the peak risk periods, but will be operating at any time between August 1, 1999, and March 31, 2000, you need only complete the U.S. Supplement 2 and submit it to the Coast Guard via one of the methods outlined above. You **do not** have to complete the IMO Year 2000 Questionnaire 3.
- If your facility will not be operating at any time between August 1, 1999, and March 31, 2000, you need not submit any portion of this questionnaire.
- The peak risk periods are:
  Midnight (2400) September 7, 1999, through midnight (2400) September 9, 1999; and
  Midnight (2400) December 30, 1999, through midnight (2400) January 1, 2000; and
  Midnight (2400) February 27, 2000, through midnight (2400) February 29, 2000.
- If your Y2K preparedness changes or your operational plans change, you must submit an updated questionnaire(s) as soon as possible.
- Any updated or new questionnaires submitted during the peak risk periods must be submitted to the Captain of the Port of the zone in which the facility is operating instead of the locations specified above. A list of Captain of the Port addresses and fax numbers is provided on page 4.
- **Data items on the IMO Questionnaire 3 marked with an asterisk (*) do not need to be filled in if the questionnaire is being submitted to the U.S. Coast Guard since the U.S. Supplement addresses similar information.**
- Please **DO NOT SUBSTITUTE** Y2K-related contingency plans, brochures, policy statements or similar documents for this questionnaire and supplement.
- If you have questions about this questionnaire, contact the Coast Guard Office of Compliance at Commandant (G-MOC), 2100 2nd Street, SW, Washington, D.C. 20593-0001; tel: 202-267-2978; fax: 202-267-4394.

An agency may not conduct nor sponsor, and a person is not required to respond to, a collection of information unless it displays a valid OMB control number. The valid OMB control number for this collection is 2115-0639. The Coast Guard estimates it will take, on average, 8 minutes to complete and submit both Questionnaire 3 and Supplement 2. You may submit any comments concerning the accuracy of this burden estimate or any suggestions for reducing the burden to: Commandant (G-MOC), U.S. Coast Guard, Washington, DC 20593-001.

IMO YEAR 2000 QUESTIONNAIRE 3

From: United States Coast Guard

To: (Marine Facility/Terminal Operator) _____

Date/time of expected arrival/departure *: _____

It is anticipated that the above ship will/may require to navigate or handle cargo within your port on or around the above dates. Please complete the following questions concerning the Year 2000 preparations made by the Port Authority/Terminal Operator.

	Circle as appropriate	
1) Does the facility have a documented Year 2000 policy in place?	YES	NO
2) Has an inventory check to identify and categorize non-compliant equipment been carried out?	YES	NO
3) Has all equipment critical to the safety of navigation/cargo handling been assessed for Year 2000 compliance?	YES	NO
4) Has facility personnel investigated potential problems and solutions?	YES	NO
5) Where non-compliant equipment has not been replaced or upgraded, have alternative systems or manual operations been established?	YES	NO
6) Has the facility sought to establish whether its critical suppliers, utilities and external services are Year 2000 compliant?	YES	NO
7) Is there serious doubt as to the availability of any supply, utility or service which is critical to safety?	YES	NO
8) Does the facility have operational contingency plans in place to cope with unforeseen Year 2000 equipment malfunctions?	YES	NO
9) Have these contingency plans been tested and reviewed to confirm their effectiveness?	YES	NO
10) Has all necessary information been exchanged and agreed with ships/shipping company on any additional Year 2000 specific requirements applicable to port/terminal/facility operations?	YES	NO

Name: _____
Position*: _____
Contact Address*: _____
_____

Signature*: _____
Date: _____

UNITED STATES SUPPLEMENT 2 TO IMO YEAR 2000 QUESTIONNAIRE 3

In addition to the IMO Year 2000 Questionnaire3, please answer the following as fully as you can for each Marine Facility operating from August 1, 1999 through March 31, 2000.

Marine Safety Office/Captain of the Port zone located in: _____

Name of Facility: _____

Type(s) of Facility: _____

Name of Company: _____

Name of Person completing questionnaire: _____

Your Title: _____

Address: _____

City: _____ **State:** _____ **Zip:** _____

Phone: _____ **FAX:** _____ **E-mail:** _____

Please indicate (by circling) if this is an: Initial/Original Questionnaire Updated Questionnaire

Please answer the following questions.	**Circle as appropriate**
1) Will the facility conduct cargo loading/transfer operations on the following dates of concern?	
• Midnight September 7 – midnight September 9, 1999	YES MAYBE NO
• Midnight December 30, 1999 – midnight January 1, 2000	YES MAYBE NO
• Midnight February 27 – midnight February 29, 2000	YES MAYBE NO
If you answer "yes" or "maybe" for any date, please complete IMO Year 2000 Questionnaire 3. If you answer "no" for all dates, stop here, you are not required to complete the IMO questionnaire, but you must still submit this supplement to the United States Coast Guard per the instructions on page 1. If, in the future, one of your answers changes from "no" to "yes" or "maybe," submit an updated questionnaire.	
2) Where potential problems and solutions have been identified, has the facility carried out appropriate remedial actions?	YES NO

Marine Safety Offices (MSOs)/Captains of the Port

MSO Portland 103 Commercial Street Portland, ME 04101-4726 PHONE: (207) 780-3681 FAX: (207) 780-3567	MSO Boston 455 Commercial Street Boston, MA 02109-1045 PHONE: (617) 223-3435 FAX: (617) 223-3032	MSO Providence 20 Risho Avenue East Providence, RI 02914-1208 PHONE: (401) 435-2350 FAX: (401) 435-2382	Group/MSO Long Island Sound 120 Woodward Avenue New Haven, CT 06512-3698 PHONE: (203) 468-4401 FAX: (203) 468-4445
USCG Activities New York Prevention/Compliance Division 212 Coast Guard Drive Staten Island, NY 10305 PHONE: (718) 354-4207 FAX: (718) 354-4301	Coast Guard Activities Baltimore 2401 Hawkins Point Road Baltimore, MD 21226-1791 PHONE: (410) 576-2693 FAX: (410) 962-0930	MSO Hampton Roads Norfolk Federal Building, 200 Granby Street Norfolk, VA 23510-1888 PHONE: (757) 441-3300 FAX: (757) 441-3262	MSO Wilmington 272 N. Front Street, Suite 500 Wilmington, NC 28401-3907 PHONE: (910) 815-4895 ext. 107 FAX: (910) 815-4523
MSO/Group Philadelphia 1 Washington Avenue Philadelphia, PA 19147-4395 PHONE: (215) 271-4806 FAX: (215) 271-4833	MSO Miami P.O. Box 01-6940 Miami, FL 33101-6940 PHONE: (305) 535-8705 FAX: (305) 535-8742	MSO Jacksonville 7820 Arlington Expressway, Suite 400 Jacksonville, FL 32211-7445 PHONE: (904) 232-2640 ext. 106 FAX: (904) 232-2664	MSO Tampa 155 Columbia Drive Tampa, FL 33606-3598 PHONE: (813) 228-2189 FAX: (813) 228-2399
MSO Savannah 222 W. Ogelthorpe Avenue, Suite 402 Savannah, GA 31401-3606 PHONE: (912) 652-4353 FAX: (912) 652-4180	MSO Charleston 196 Tradd Street Charleston, SC 29401-1899 PHONE: (843) 724-7684 FAX: (843) 720-7750	MSO San Juan P.O. Box 9023666 San Juan, PR 00902-3666 PHONE: (787) 729-6800 ext.303 FAX: (787) 729-6648	MSO New Orleans 1615 Poydras Street New Orleans, LA 70112-1254 PHONE: (504) 589-4256 FAX: (504) 589-7470
MSO Morgan City 800 David Drive Morgan City, LA 70380-1304 PHONE: (504) 380-5312 FAX: (504) 385-1687	MSO Corpus Christi 400 Mann Street, Suite 210 Corpus Christi, TX 78401-2046 PHONE: (512) 888-3162 FAX: (512) 888-3115	MSO Houston-Galveston P.O. Box 446 Galena Park, TX 77547-0446 PHONE: (713) 671-5100 ext. 0 FAX: (713) 671-5177	MSO Mobile P.O. Box 2924 150 N. Royal Street Mobile, AL 36652-2924 PHONE: (334) 441-5121 FAX: (334) 441-6169
MSO Port Arthur Federal Building 2875 Jimmy Johnson Boulevard Port Arthur , TX 77640-2099 PHONE: (409) 723-6509 ext. 251 FAX: (409) 723-6534	MSO St. Louis 1222 Spruce Street, Suite 8.104E St. Louis, MO 63103-2835 PHONE: (314) 539-3091 ext. 281 FAX: (314) 539-2659	MSO Huntington 1415 6th Avenue Huntington, WV 25701-2420 PHONE: (304) 529-5432 FAX: (304) 529-5051	MSO Louisville 600 Martin Luther King, Jr. Pl., Room 360 Louisville, KY 40202-2230 PHONE: (502) 582-5194 ext. 39 FAX: (502) 582-6825
MSO Memphis 200 Jefferson Avenue, Suite 1301 Memphis, TN 38103-2300 PHONE: (901) 544-3941 ext. 226 FAX: (901) 544-3886	MSO Paducah 225 Tully Street Paducah, KY 42003-1582 PHONE: (502) 442-1621 FAX: (502) 442-1633	MSO Pittsburgh Kossman Building, Suite 1150 100 Forbes Avenue Pittsburgh, PA 15222-1371 PHONE: (412) 644-5808 ext. 115 FAX: (412) 644-3479	MSO Buffalo 1 Fuhrman Boulevard Buffalo, NY 14230 PHONE: (716) 843-9570 FAX: (716) 843-9571
MSO Chicago 215 W. 83rd Street, Suite D Burr Ridge, IL 60521 PHONE: (630) 986-2155 FAX: (630) 986-2120/2174	MSO Cleveland 1055 E. 9th Street Cleveland, OH 44114 PHONE: (216) 522-4405 FAX: (216) 522-3290	MSO Detroit 110 Mt. Elliot Avenue Detroit, MI 48207 PHONE: (313) 568-9580 FAX: (313) 568-9581	MSO Duluth 600 S. Lake Avenue, Canal Park Duluth, MN 55802-2352 PHONE: (218) 720-5286 FAX: (218) 720-5258
MSO Milwaukee 2420 S. Lincoln Memorial Drive Milwaukee, WI 53207-1997 PHONE: (414) 747-7155 FAX: (414) 747-7890	MSO Toledo Federal Building 234 Summit Street, Room 501 Toledo, OH 43604 PHONE: (419) 259-6372 FAX: (419) 259-6374	MSO Sault Ste. Marie 337 Water Street Sault Ste. Maire, MI 49783 PHONE: (906) 635-3223 FAX: (906) 635-3321	MSO Long Beach 165 N. Pico Avenue Long Beach, CA 90802-1096 PHONE: (562) 980-4447 FAX: (562) 980-4413
MSO San Diego 2716 N. Harbor Drive San Diego, CA 92101-1064 PHONE: (619) 683-6477 FAX: (619) 683-6504	MSO San Francisco Building 14, Coast Guard Island Alameda, CA 94501-5100 PHONE: (510) 437-3082 FAX: (510) 437-3072	MSO Puget Sound 1519 Alaskan Way South, Building 1 Seattle, WA 98134-1192 PHONE: (206) 217-6232 FAX: (206) 217-6345	MSO Portland 6767 N. Basin Avenue Portland, OR 97217-3992 PHONE: (503) 240-9301 FAX: (503) 240-9302
MSO Honolulu 433 Ala Moana Boulevard Honolulu, HI 96813-4909 PHONE: (808) 522-8252 FAX: (808) 522-8271	MARSEC/MSO Guam PSC 455, Box 176 FPO AP, 95-6540-1056 PHONE: (671) 339-2001 ext.164 FAX: (671) 339-2005	MSO Juneau 2760 Sherwood Lane, Suite 2A Juneau, AK 99801-8545 PHONE: (907) 463-2464 FAX: (907) 463-2445	MSO Anchorage 510 L Street, Suite 100 Anchorage, AK 99501-1946 PHONE: (907) 271-6724 FAX: (907) 271-6751
MSO Valdez P.O. Box 486 105 South Clifton Valdez, AK 99686-0486 PHONE: (907) 835-7205 FAX: (907) 835-7207			

The geographic boundaries for all Captain of the Port Zones are contained in 33 CFR part 3.

PART 161—VESSEL TRAFFIC MANAGEMENT

Subpart A—Vessel Traffic Services

GENERAL RULES

Sec.
161.1 Purpose and Intent.
161.2 Definitions.
161.3 Applicability.
161.4 Requirement to carry the rules.
161.5 Deviations from the rules.

SERVICES, VTS MEASURES, AND OPERATING REQUIREMENTS

161.10 Services.
161.11 VTS measures.
161.12 Vessel operating requirements.
161.13 VTS Special Area operating requirements.

Subpart B—Vessel Movement Reporting System

161.15 Purpose and intent.
161.16 Applicability.
161.17 Definitions.
161.18 Reporting requirements.
161.19 Sailing Plan (SP).
161.20 Position Report (PR).
161.21 Sailing Plan Deviation Report (DR).
161.22 Final Report (FR).
161.23 Reporting exemptions.

Subpart C—Vessel Traffic Service Areas, Cooperative Vessel Traffic Service Area, Vessel Traffic Service Special Areas and Reporting Points

161.25 Vessel Traffic Service New York Area.
161.30 Vessel Traffic Service Louisville.
161.35 Vessel Traffic Service Houston/Galveston.
161.40 Vessel Traffic Service Berwick Bay.
161.45 Vessel Traffic Service St. Marys River.
161.50 Vessel Traffic Service San Francisco.
161.55 Vessel Traffic Service Puget Sound and the Cooperative Vessel Traffic Service for the Juan de Fuca Region.
161.60 Vessel Traffic Service Prince William Sound.

AUTHORITY: 33 U.S.C. 1231; 33 U.S.C. 1223; 49 CFR 1.46.

SOURCE: CGD 90–020, 59 FR 36324, July 15, 1994, unless otherwise noted.

Subpart A—Vessel Traffic Services

GENERAL RULES

§ 161.1 Purpose and Intent.

(a) The purpose of this part is to promulgate regulations implementing and enforcing certain sections of the Ports and Waterways Safety Act (PWSA) setting up a national system of Vessel Traffic Services that will enhance navigation, vessel safety, and marine environmental protection, and promote safe vessel movement by reducing the potential for collisions, rammings, and groundings, and the loss of lives and property associated with these incidents within VTS areas established hereunder.

(b) Vessel Traffic Services provide the mariner with information related to the safe navigation of a waterway. This information, coupled with the mariner's compliance with the provisions set forth in this part, enhances the safe routing of vessels through congested waterways or waterways of particular hazard. Under certain circumstances, a VTS may issue directions to control the movement of vessels in order to minimize the risk of collision between vessels, or damage to property or the environment.

(c) The owner, operator, charterer, master, or person directing the movement of a vessel remains at all times responsible for the manner in which the vessel is operated and maneuvered, and is responsible for the safe navigation of the vessel under all circumstances. Compliance with these rules or with a direction of the VTS is at all times contingent upon the exigencies of safe navigation.

(d) Nothing in this part is intended to relieve any vessel, owner, operator, charterer, master, or person directing the movement of a vessel from the consequences of any neglect to comply with this part or any other applicable law or regulation (e.g., the International Regulations for Prevention of Collisions at Sea, 1972 (72 COLREGS) or the Inland Navigation Rules) or of the neglect of any precaution which may be required by the ordinary practice of seamen, or by the special circumstances of the case.

§ 161.2 Definitions.

For the purposes of this part:

Cooperative Vessel Traffic Services (CVTS) means the system of vessel traffic management established and jointly operated by the United States and Canada within adjoining waters. In addition, CVTS facilitates traffic movement and anchorages, avoids jurisdictional disputes, and renders assistance in emergencies in adjoining United States and Canadian waters.

Hazardous Vessel Operating Condition means any condition related to a vessel's ability to safely navigate or maneuver, and includes, but is not limited to:

(1) The absence or malfunction of vessel operating equipment, such as propulsion machinery, steering gear, radar system, gyrocompass, depth

sounding device, automatic radar plotting aid (ARPA), radiotelephone, Automatic Identification System equipment, navigational lighting, sound signaling devices or similar equipment.

(2) Any condition on board the vessel likely to impair navigation, such as lack of current nautical charts and publications, personnel shortage, or similar condition.

(3) Vessel characteristics that affect or restrict maneuverability, such as cargo arrangement, trim, loaded condition, underkeel clearance, speed, or similar characteristics.

Precautionary Area means a routing measure comprising an area within defined limits where vessels must navigate with particular caution and within which the direction of traffic may be recommended.

Towing Vessel means any commercial vessel engaged in towing another vessel astern, alongside, or by pushing ahead.

Vessel Movement Reporting System (VMRS) is a system used to manage and track vessel movements within a VTS area. This is accomplished by a vessel providing information under established procedures as set forth in this part, or as directed by the VTS.

Vessel Movement Reporting System (VMRS) User means a vessel, or an owner, operator, charterer, master, or person directing the movement of a vessel, that is required to participate in a VMRS within a VTS area. VMRS participation is required for:

(1) Every power-driven vessel of 40 meters (approximately 131 feet) or more in length, while navigating;

(2) Every towing vessel of 8 meters (approximately 26 feet) or more in length, while navigating; or

(3) Every vessel certificated to carry 50 or more passengers for hire, when engaged in trade.

Vessel Traffic Center (VTC) means the shore-based facility that operates the vessel traffic service for the Vessel Traffic Service area or sector within such an area.

Vessel Traffic Services (VTS) means a service implemented by the United States Coast Guard designed to improve the safety and efficiency of vessel traffic and to protect the environment. The VTS has the capability to interact with marine traffic and respond to traffic situations developing in the VTS area.

Vessel Traffic Service Area or *VTS Area* means the geographical area encompassing a specific VTS area of service. This area of service may be subdivided into sectors for the purpose of allocating responsibility to individual Vessel Traffic Centers or to identify different operating requirements.

NOTE: Although regulatory jurisdiction is limited to the navigable waters of the United States, certain vessels will be encouraged or may be required, as a condition of port entry, to report beyond this area to facilitate traffic management within the VTS area.

VTS Special Area means a waterway within a VTS area in which special operating requirements apply.

VTS User means a vessel, or an owner, operator, charterer, master, or person directing the movement of a vessel, that is:

(a) Subject to the Vessel Bridge-to-Bridge Radiotelephone Act; or

(b) Required to participate in a VMRS within a VTS area (VMRS User).

VTS User's Manual means the manual established and distributed by the VTS to provide the mariner with a description of the services offered and rules in force for that VTS. Additionally, the manual may include chartlets showing the area and sector boundaries, general navigational information about the area, and procedures, radio frequencies, reporting provisions and other information which may assist the mariner while in the VTS area.

[CGD 90–020, 59 FR 36324, July 15, 1994, as amended by CGE 97–023, 62 FR 33364, June 19, 1997]

§161.3 Applicability.

The provisions of this subpart shall apply to each VTS User and may also apply to any vessel while underway or at anchor on the navigable waters of the United States within a VTS area, to the extent the VTS considers necessary.

§161.4 Requirement to carry the rules.

Each VTS User shall carry on board and maintain for ready reference a copy of these rules.

NOTE: These rules are contained in the applicable U.S. Coast Pilot, the VTS User's

Manual which may be obtained by contacting the appropriate VTS, and periodically published in the Local Notice to Mariners. The VTS User's Manual and the World VTS Guide, an International Maritime Organization (IMO) recognized publication, contain additional information which may assist the prudent mariner while in the appropriate VTS area.

§ 161.5 Deviations from the rules.

(a) Requests to deviate from any provision in this part, either for an extended period of time or if anticipated before the start of a transit, must be submitted in writing to the appropriate District Commander. Upon receipt of the written request, the District Commander may authorize a deviation if it is determined that such a deviation provides a level of safety equivalent to that provided by the required measure or is a maneuver considered necessary for safe navigation under the circumstances. An application for an authorized deviation must state the need and fully describe the proposed alternative to the required measure.

(b) Requests to deviate from any provision in this part due to circumstances that develop during a transit or immediately preceeding a transit, may be made verbally to the appropriate VTS Commanding Officer. Requests to deviate shall be made as far in advance as practicable. Upon receipt of the request, the VTS Commanding Officer may authorize a deviation if it is determined that, based on vessel handling characteristics, traffic density, radar contacts, environmental conditions and other relevant information, such a deviation provides a level of safety equivalent to that provided by the required measure or is a maneuver considered necessary for safe navigation under the circumstances.

SERVICES, VTS MEASURES, AND OPERATING REQUIREMENTS

§ 161.10 Services.

To enhance navigation and vessel safety, and to protect the marine environment, a VTS may issue advisories, or respond to vessel requests for information, on reported conditions within the VTS area, such as:

(a) Hazardous conditions or circumstances;

(b) Vessel congestion;

(c) Traffic density;

(d) Environmental conditions;

(e) Aids to navigation status;

(f) Anticipated vessel encounters;

(g) Another vessel's name, type, position, hazardous vessel operating conditions, if applicable, and intended navigation movements, as reported;

(h) Temporary measures in effect;

(i) A description of local harbor operations and conditions, such as ferry routes, dredging, and so forth;

(j) Anchorage availability; or

(k) Other information or special circumstances.

§ 161.11 VTS measures.

(a) A VTS may issue measures or directions to enhance navigation and vessel safety and to protect the marine environment, such as, but not limited to:

(1) Designating temporary reporting points and procedures;

(2) Imposing vessel operating requirements; or

(3) Establishing vessel traffic routing schemes.

(b) During conditions of vessel congestion, restricted visibility, adverse weather, or other hazardous circumstances, a VTS may control, supervise, or otherwise manage traffic, by specifying times of entry, movement, or departure to, from, or within a VTS area.

§ 161.12 Vessel operating requirements.

(a) Subject to the exigencies of safe navigation, a VTS User shall comply with all measures established or directions issued by a VTS.

(1) If, in a specific circumstance, a VTS User is unable to safely comply with a measure or direction issued by the VTS, the VTS User may deviate only to the extent necessary to avoid endangering persons, property or the environment. The deviation shall be reported to the VTS as soon as is practicable.

(b) When not exchanging communications, a VTS User must maintain a listening watch as required by § 26.04(e) of this chapter on the VTS frequency designated in Table 161.12(b) (VTS Call Signs, Designated Frequencies, and

Monitoring Areas). In addition, the VTS User must respond promptly when hailed and communicate in the English language.

NOTE: As stated in 47 CFR 80.148(b), a VHF watch on Channel 16 (156.800 MHz) is not required on vessels subject to the Vessel Bridge-to-Bridge Radiotelephone Act and participating in a Vessel Traffic Service (VTS) system when the watch is maintained on both the vessel bridge-to-bridge frequency and a designated VTS frequency.

TABLE 161.12(B).—VESSEL TRAFFIC SERVICES (VTS) CALL SIGNS, DESIGNATED FREQUENCIES, AND MONITORING AREAS

Vessel traffic services call sign	Designated[1] frequency (channel designation)	Monitoring area
New York[2]		
New York Traffic[3]	156.550 MHz (Ch. 11) and 156.700 MHz (Ch. 14)	The navigable waters of the Lower New York Harbor bounded on the east by a line drawn from Norton Point to Breezy Point; on the south by a line connecting the entrance buoys at the Ambrose Channel, Swash Channel and Sandy Hook Channel to Sandy Hook Point; and on the southeast including the waters of the Sandy Hook Bay south to a line drawn at latitude 40°25′N.; then west into waters of the Raritan Bay to the Raritan River Rail Road Bridge; and then north including the waters of the Arthur Kill and Newark Bay to the Lehigh Valley Draw Bridge at latitude 40°41.95′N.; and then east including the waters of the Kill Van Kull and Upper New York Bay north to a line drawn east-west from the Holland Tunnel Ventilator Shaft at latitude 40°43.7′N.; longitude 74°01.6′W. in the Hudson River; and continuing east including the waters of the East River to the Throgs Neck Bridge, excluding the Harlem River.
	156.600 MHz (Ch. 12)	Each vessel at anchor within the above areas.
Houston[2]		The navigable waters north of 29°N., west of 94°20′W., south of 29°49′N., and east of 95°20′W.
Houston Traffic	156.550 MHz (Ch. 11)	The navigable waters north of a line extending due west from the southern most end of Exxon Dock #1 (29°43.37′N., 95°01.27′W.).
	156.600 MHz (Ch. 12)	The navigable waters south of a line extending due west from the southern most end of Exxon Dock #1 (29°43.37′N., 95°01.27′W.).
Berwick Bay		
Berwick Traffic	156.550 MHz (Ch. 11)	The navigable waters south of 29°45′N., west of 91°10′W., north of 29°37′N., and east of 91°18′W.
St. Marys River		
Soo Control	156.600 MHz (Ch. 12)	The navigable waters of the St. Marys River between 45°57′N. (De Tour Reef Light) and 46°38.7′N. (Ile Parisienne Light), except the St. Marys Falls Canal and those navigable waters east of a line from 46°04.16′N. and 46°01.57′N. (LaPointe to Sims Point in Potagannissing Bay and Worsley Bay).
San Francisco[2]		
San Francisco Offshore Vessel Movement	156.600 MHz (Ch. 12)	The waters within a 38 nautical mile radius of Mount Tamalpais (37°55.8′N., 122°34.6′W.) excluding the San Francisco Offshore Precautionary Area.
Reporting Service San Francisco Traffic	156.700 MHz (Ch. 14)	The waters of the San Francisco Offshore Precautionary Area eastward to San Francisco Bay including its tributaries extending to the ports of Stockton, Sacramento and Redwood City.
Puget Sound[4]		
Seattle Traffic[5]	156.700 MHz (Ch. 14)	The navigable waters of Puget Sound, Hood Canal and adjacent waters south of a line connecting Marrowstone Point and Lagoon Point in Admiralty Inlet and south of a line drawn due east from the southernmost tip of Possession Point on Whidbey Island to the shoreline.
	156.250 MHz (Ch. 5A)	The navigable waters of the Strait of Juan de Fuca east of 124°40′W. excluding the waters in the central portion of the Strait of Juan de Fuca north and east of Race Rocks; the navigable waters of the Strait of Georgia east of 122°52′W.; the San Juan Island Archipelago, Rosario Strait, Bellingham Bay; Admiralty of Juan de Fuca north and east of Race Rocks; the navigable waters of the Strait of Georgia east of 122°52′W.; the San Juan Island Archipelago, Rosario Strait, Bellingham Bay; Admiralty Inlet north of a line connecting Marrowstone Point and Lagoon Point and all waters east of Whidbey Island north of a line drawn due east from the southernmost tip of Possession Point on Whidbey Island to the shoreline.
Tofino Traffic[6]	156.725 MHz (Ch. 74)	The waters west of 124°40′W. within 50 nautical miles of the coast of Vancouver Island including the waters north of 48°N., and east of 127°W.

Vancouver Traffic	156.550 MHz (Ch. 11)	The navigable waters of the Strait of Georgia west of 122°52′W., the navigable waters of the central Strait of Juan de Fuca north and east of Race Rocks, including the Gulf Island Archipelago, Boundary Pass and Haro Strait.
Prince William Sound [7]		
Valdez Traffic	156.650 MHz (Ch. 13)	The navigable waters south of 61°05′N., east of 147°20′W., north of 60°N., and west of 146°30′W.; and, all navigable waters in Port Valdez.
Louisville [7]		
Louisville Traffic	156.650 MHz (Ch. 13)	The navigable waters of the Ohio River between McAlpine Locks (Mile 606) and Twelve Mile Island (Mile 593), only when the McAlpine upper pool gauge is at approximately 13.0 feet or above.

Notes:

[1] In the event of a communication failure either by the vessel traffic center or the vessel or radio congestion on a designated VTS frequency, communications may be established on an alternate VTS frequency. The bridge-to-bridge navigational frequency, 156.650 MHz (Channel 13), is monitored in each VTS area; and it may be used as an alternate frequency, however, only to the extent that doing so provides a level of safety beyond that provided by other means.

[2] Designated frequency monitoring is required within U.S. navigable waters. In areas which are outside the U.S. navigable waters, designated frequency monitoring is voluntary. However, prospective VTS Users are encouraged to monitor the designated frequency.

[3] VMRS participants shall make their initial report (Sail Plan) to New York Traffic on Channel 11 (156.550 MHz). All other reports, including the Final Report, shall be made on Channel 14 (156.700 MHz). VMRS and other VTS Users shall monitor Channel 14 (156.700 MHz) while transiting the VTS area. New York Traffic may direct a vessel to monitor and report on either primary frequency depending on traffic density, weather conditions, or other safety factors. This does not require a vessel to monitor both primary frequencies.

[4] A Cooperative Vessel Traffic Service was established by the Untied States and Canada within adjoining waters. The appropriate vessel traffic Center administers the rules issued by both nations; however, it will enforce only its own set of rules within its jurisdiction.

[5] Seattle traffic may direct a vessel to monitor the other primary VTS frequency 156.250 MHz or 156.700 MHz (Channel 5A or 14) depending on traffic density, weather conditions, or other safety factors, rather than strictly adhering to the designated frequency required for each monitoring area as defined above. This does not require a vessel to monitor both primary frequencies.

[6] A portion of Tofino Sector's monitoring area extends beyond the defined CVTS area. Designated frequency monitoring is voluntary in these portions outside of VTS jurisdiction, however, prospective VTS Users are encouraged to monitor the designated frequency.

[7] The bridge-to-bridge navigational frequency, 156.650 MHz (Channel 13), is used in these VTSs because the level of radiotelephone transmissions does not warrant a designated VTS frequency. The listening watch required by 26.05 of this chapter is not limited to the monitoring area.

(c) As soon as is practicable, a VTS User shall notify the VTS of any of the following:

(1) A marine casualty as defined in 46 CFR 4.05–1;

(2) Involvement in the ramming of a fixed or floating object;

(3) A pollution incident as defined in § 151.15 of this chapter;

(4) A defect or discrepancy in an aid to navigation;

(5) A hazardous condition as defined in § 160.203 of this chapter;

(6) Improper operation of vessel equipment required by Part 164 of this chapter;

(7) A situation involving hazardous materials for which a report is required by 49 CFR 176.48; and

(8) A hazardous vessel operating condition as defined in § 161.2.

[CGD 90–020, 59 FR 36324, July 15, 1994, as amended by CGD 95–033, 60 FR 28329, May 31, 1995; CGD 92–052, 61 FR 45326, Aug. 29, 1996]

§ 161.13 VTS Special Area operating requirements.

The following operating requirements apply within a VTS Special Area:

(a) A VTS User shall, if towing astern, do so with as short a hawser as safety and good seamanship permits.

(b) A VMRS User shall: (1) Not enter or get underway in the area without prior approval of the VTS;

(2) Not enter a VTS Special Area if a hazardous vessel operating condition or circumstance exists;

(3) Not meet, cross, or overtake any other VMRS User in the area without prior approval of the VTS; and

(4) Before meeting, crossing, or overtaking any other VMRS User in the area, communicate on the designated vessel bridge-to-bridge radiotelephone frequency, intended navigation movements, and any other information necessary in order to make safe passing arrangements. This requirement does not relieve a vessel of any duty prescribed by the International Regulations for Prevention of Collisions at Sea, 1972 (72 COLREGS) or the Inland Navigation Rules.

Subpart B—Vessel Movement Reporting System

§ 161.15 Purpose and intent.

(a) A Vessel Movement Reporting System (VMRS) is a system used to manage and track vessel movements within a VTS area. This is accomplished by requiring that vessels provide information under established procedures as set forth in this part, or as directed by the VTS.

(b) To avoid imposing an undue reporting burden or unduly congesting radiotelephone frequencies, reports shall be limited to information which is essential to achieve the objectives of the VMRS. These reports are consolidated into four reports (sailing plan, position, sailing plan deviation and final).

§ 161.16 Applicability.

The provisions of this subpart shall apply to the following VMRS Users:

(a) Every power-driven vessel of 40 meters (approximately 131 feet) or more in length, while navigating;

(b) Every towing vessel of 8 meters (approximately 26 feet) or more in length, while navigating; or

(c) Every vessel certificated to carry 50 or more passengers for hire, when engaged in trade.

§ 161.17 Definitions.

As used in this subpart: *Published* means available in a widely-distributed and publicly available medium (e.g., VTS User's Manual, ferry schedule, Notice to Mariners).

§ 161.18 Reporting requirements.

(a) A VTS may: (1) Direct a vessel to provide any of the information set forth in Table 161.18(a) (IMO Standard Ship Reporting System);

TABLE 161.18(A).—THE IMO STANDARD SHIP REPORTING SYSTEM

A	ALPHA	Ship	Name, call sign or ship station identity, and flag.

TABLE 161.18(A).—THE IMO STANDARD SHIP REPORTING SYSTEM—Continued

B	BRAVO	Dates and time of event	A 6 digit group giving day of month (first two digits), hours and minutes (last four digits). If other than UTC state time zone used.
C	CHARLIE	Position	A 4 digit group giving latitude in degrees and minutes suffixed with N (north) or S (south) and a 5 digit group giving longitude in degrees and minutes suffixed with E (east) or W (west); or.
D	DELTA	Position	True bearing (first 3 digits) and distance (state distance) in nautical miles from a clearly identified landmark (state landmark).
E	ECHO	True course	A 3 digit group.
F	FOXTROT	Speed in knots and tenths of knots.	A 3 digit group.
G	GOLF	Port of Departure	Name of last port of call.
H	HOTEL	Date, time and point of entry system.	Entry time expressed as in (B) and into the entry position expressed as in (C) or (D).
I	INDIA	Destination and expected time of arrival.	Name of port and date time group expressed as in (B).
J	JULIET	Pilot	State whether a deep sea or local pilot is on board.
K	KILO	Date, time and point of exit from system.	Exit time expressed as in (B) and exit position expressed as in (C) or (D).
L	LIMA	Route information	Intended track.
M	MIKE	Radio	State in full names of communications stations/frequencies guarded.
N	NOVEMBER	Time of next report	Date time group expressed as in (B).
O	OSCAR	Maximum present static draught in meters.	4 digit group giving meters and centimeters.
P	PAPA	Cargo on board	Cargo and brief details of any dangerous cargoes as well as harmful substances and gases that could endanger persons or the environment.
Q	QUEBEC	Defects, damage, deficiencies or limitations.	Brief detail of defects, damage, deficiencies or other limitations.
R	ROMEO	Description of pollution or dangerous goods lost.	Brief details of type of pollution (oil, chemicals, etc) or dangerous goods lost overboard; position expressed as in (C) or (D).
S	SIERRA	Weather conditions	Brief details of weather and sea conditions prevailing.
T	TANGO	Ship's representative and/or owner.	Details of name and particulars of ship's representative and/or owner for provision of information.
U	UNIFORM	Ship size and type	Details of length, breadth, tonnage, and type, etc., as required.
V	VICTOR	Medical personnel	Doctor, physician's assistant, nurse, no medic.
W	WHISKEY	Total number of persons on board.	State number.
X	XRAY	Miscellaneous	Any other information as appropriate. [i.e., a detailed description of a planned operation, which may include: its duration; effective area; any restrictions to navigation; notification procedures for approaching vessels; in addition, for a towing operation: configuration, length of the tow, available horsepower, etc.; for a dredge or floating plant: configuration of pipeline, mooring configuration, number of assist vessels, etc.].

(2) Establish other means of reporting for those vessels unable to report on the designated frequency; or

(3) Require reports from a vessel in sufficient time to allow advance vessel traffic planning.

(b) All reports required by this part shall be made as soon as is practicable on the frequency designated in Table 161.12(b) (VTS Call Signs, Designated Frequencies, and Monitoring Areas).

(c) When not exchanging communications, a VMRS User must maintain a listening watch as described in § 26.04(e) of this chapter on the frequency designated in Table 161.12(b) (VTS Call Signs, Designated Frequencies, and Monitoring Areas). In addition, the VMRS User must respond promptly when hailed and communicate in the English language.

NOTE: As stated in 47 CFR 80.148(b), a VHF watch on Channel 16 (156.800 MHz) is not required on vessels subject to the Vessel Bridge-to-Bridge Radiotelephone Act and participating in a Vessel Traffic Service (VTS) system when the watch is maintained on both the vessel bridge-to-bridge frequency and a designated VTS frequency.

(d) When reports required by this part include time information, such information shall be given using the local time zone in effect and the 24-hour military clock system.

§ 161.19 Sailing Plan (SP).

Unless otherwise stated, at least 15 minutes before navigating a VTS area, a vessel must report the:

(a) Vessel name and type;

(b) Position;

(c) Destination and ETA;

(d) Intended route;

(e) Time and point of entry; and

(f) Dangerous cargo on board or in its tow, as defined in § 160.203 of this chapter, and other required information as set out in § 160.211 and § 160.213 of this chapter, if applicable.

§ 161.20 Position Report (PR).

A vessel must report its name and position:

(a) Upon point of entry into a VTS area;

(b) At designated reporting points as set forth in subpart C; or

(c) When directed by the VTC.

NOTE: Notice of temporary reporting points, if established, may be published via Local Notices to Mariners, general broadcast or the VTS User's Manual.

§ 161.21 Sailing Plan Deviation Report (DR).

A vessel must report:

(a) When its ETA to a destination varies significantly from a previously reported ETA;

(b) Any intention to deviate from a VTS issued measure or vessel traffic routing system; or

(c) Any significant deviation from previously reported information.

§ 161.22 Final Report (FR).

A vessel must report its name and position:

(a) On arrival at its destination; or

(b) When leaving a VTS area.

§ 161.23 Reporting exemptions.

(a) Unless otherwise directed, the following vessels are exempted from providing Position and Final Reports due to the nature of their operation:

(1) Vessels on a published schedule and route;

(2) Vessels operating within an area of a radius of three nautical miles or less; or

(3) Vessels escorting another vessel or assisting another vessel in maneuvering procedures.

(b) A vessel described in paragraph (a) of this section must:

(1) Provide a Sailing Plan at least 5 minutes but not more than 15 minutes before navigating within the VTS area; and

(2) If it departs from its promulgated schedule by more than 15 minutes or changes its limited operating area, make the established VMRS reports, or report as directed.

(c) In those VTS areas capable of receiving automated position reports from Automatic Identification System Shipborne Equipment (AISSE) as required by § 164.43 of this chapter and where AISSE is required, vessels equipped with an operating AISSE are not required to make voice radio position reports at designated reporting points as required by § 161.20(b) of this part, unless otherwise directed by the VTC.

(1) Whenever an AISSE becomes nonoperational as defined in § 164.43(c) of

this chapter, before entering or while underway in a VTS area, a vessel must:

(i) Notify the VTC;

(ii) Make voice radio position reports at designated reporting points as required by §161.20(b) of this part;

(iii) Make other voice radio reports as directed; and

(iv) Restore the AISSE to operating condition as soon as possible.

(2) Whenever an AISSE becomes nonoperational due to a loss of position correction information (i.e., the U.S. Coast Guard differential global positioning system (dGPS) cannot provide the required error correction messages) a vessel must:

(i) Make required voice radio position reports at designated reporting points required by §161.20(b) of this part; and

(ii) Make other voice radio reports as directed.

NOTE: Regulations pertaining to AISSE required capabilities are set forth in §164.43 of this chapter.

[CGD 90–020, 59 FR 36324, July 15, 1994, as amended by CGD 97–023, 62 FR 33364, June 19, 1997]

Subpart C—Vessel Traffic Service Areas, Cooperative Vessel Traffic Service Area, Vessel Traffic Service Special Areas and Reporting Points

NOTE: All geographic coordinates contained in part 161 (latitude and longitude) are expressed in North American Datum of 1983 (NAD 83).

§161.25 Vessel Traffic Service New York Area.

The area consists of the navigable waters of the Lower New York Harbor bounded on the east by a line drawn from Norton Point to Breezy Point; on the south by a line connecting the entrance buoys at the Ambrose Channel, Swash Channel, and Sandy Hook Channel to Sandy Hook Point; and on the southeast including the waters of Sandy Hook Bay south to a line drawn at latitude 40°25′N.; then west into waters of the Raritan Bay to the Raritan River Rail Road Bridge; and then north including the waters of the Arthur Kill and Newark Bay to the Lehigh Valley Draw Bridge at latitude 40°41.9′N.; and then east including the waters of the Kill Van Kull and Upper New York Bay north to a line drawn east-west from the Holland Tunnel Ventilator Shaft at latitude 40°43.7′N., longitude 74°01.6′W. in the Hudson River; and then continuing east including the waters of the East River to the Throgs Neck Bridge, excluding the Harlem River.

NOTE: Although mandatory participation in VTSNY is limited to the area within the navigable waters of the United States, VTSNY will provide services beyond those waters. Prospective users are encouraged to report beyond the area of required participation in order to facilitate advance vessel traffic management in the VTS area and to receive VTSNY advisories and/or assistance.

[CGD 92–052, 61 FR 45327, Aug. 29, 1996]

§161.30 Vessel Traffic Service Louisville.

The VTS area consists of the navigable waters of the Ohio River between McAlpine Locks (Mile 606.8) and Twelve Mile Island (Mile 593), only when the McAlpine upper pool gauge is at 13.0 feet or above.

[CGD 90–020, 59 FR 36324, July 15, 1994, as amended by USCG–1998–3799, 63 FR 35531, June 30, 1998]

§161.35 Vessel Traffic Service Houston/Galveston.

(a) The VTS area consists of the following major waterways and portions of connecting waterways: Galveston Bay Entrance Channel; Outer Bar Channel; Inner Bar Channel; Bolivar Roads Channel; Galveston Channel; Gulf ICW and Galveston-Freeport Cut-Off from Mile 346 to Mile 352; Texas City Channel; Texas City Turning Basin; Texas City Canal Channel; Texas City Canal Turning Basin; Houston Ship Channel; Bayport Channel; Bayport Turning Basin; Houston Turning Basin; and the following precautionary areas associated with these waterways.

(b) Precautionary Areas.

TABLE 161.35(B)—VTS HOUSTON/GALVESTON PRECAUTIONARY AREAS

Precautionary area name	Radius (yds.)	Center point	
		Latitude	Longitude
Bolivar Roads	4000	29°20.9′N	94°47.0′W
Red Fish Bar	4000	29°29.8′N	94°51.9′W
Bayport Channel.	4000	29°36.7′N	94°57.2′W

TABLE 161.35(B)—VTS HOUSTON/GALVESTON PRECAUTIONARY AREAS—Continued

Precautionary area name	Radius (yds.)	Center point	
		Latitude	Longitude
Morgans Point	2000	29°41.0′N	94°59.0′W
Upper San Jacinto Bay.	1000	29°42.3′N	95°01.1′W
Baytown	1000	29°43.6′N	95°01.4′W
Lynchburg	1000	29°45.8′N	95°04.8′W
Carpenters Bayou.	1000	29°45.3′N	95°05.6′W
Jacintoport	1000	29°44.8′N	95°06.0′W
Greens Bayou	1000	29°44.8′N	95°10.2′W

TABLE 161.35(B)—VTS HOUSTON/GALVESTON PRECAUTIONARY AREAS—Continued

Precautionary area name	Radius (yds.)	Center point	
		Latitude	Longitude
Hunting Bayou	1000	29°44.3′N	95°12.1′W
Sims Bayou ...	1000	29°43.1′N	95°14.4′W
Brady Island ..	1000	29°43.5′N	95°16.4′ W
Buffalo Bayou	1000	29°45.0′N	95°17.3′W

Note: Each Precautionary Area encompasses a circular area of the radius denoted.

(c) Reporting Points.

TABLE 161.35(C)—VTS HOUSTON/GALVESTON REPORTING POINTS

Designator	Geographic name	Geographic description	Latitude/longitude	Notes
1	Galveston Bay Entrance Channel	Galveston Bay Entrance CH Lighted Buoy (LB) ''GB''.	29°18.4′N; 94°37.6′W.	
2	Galveston Bay Entrance Channel	Galveston Bay Entrance Channel LB 11 and 12.	29°20.6′N; 94°44.6′W.	
E	Bolivar Land Cut	Mile 349 Intracoastal Waterway (ICW)	29°22.5′N; 94°46.9′ W	Tows entering HSC also report at HSC LB 25 & 26.
W	Pelican Cut	Mile 351 ICW	29°21.4′N; 94°48.5′ W	Tow entering HSC also report at HSC LB 25 & 26.
GCG	Galveston Harbor	USCG Base. At the entrance to Galveston Harbor.	29°20.0′N; 94°46.5′W.	
T	Texas City Channel	Texas City Channel LB 12	29°22.4′N; 94°50.9′W.	
X	Houston Ship Channel ICW Intersection	Houston Ship Channel (HSC) LB 25 and 26.	29°22.1′N; 94°48.1′W.	Tow entering HSC from ICW or Texas Cut Only.
3	Lower Galveston Bay	HSC LB 31 and 32	29°23.5′N; 94°48.8′W.	
4	Red Fish Bar	HSC Lt. 53A & 54A	29°30.3′N; 94°52.4′W.	
P	Bayport Ship Channel	Bayport Ship Channel Lt. 7 and 8	29°36.8′N; 94°59.5′ W;	Report at the North Land Cut.
4A	Upper Galveston Bay	HSC Buoys 69 and 70	29°34.7′N; 94°55.8′ W	Tows only.
5	Morgan's Point	Barbour's Cut	29°41.0′N; 94°58.9′W.	Abeam Barbours Cut.
6	Exxon	Baytown Bend	29°43.5′N; 95°01.4′W.	
7	Lynchburg	Ferry crossing	29°45.8′N; 95°04.8′W.	
8	Shell Oil	Boggy Bayou	29°44.1′N; 95°08.0′W.	
9	Greens Bayou	Greens Bayou	29°44.8′N; 95°10.1′W.	
10	Hess Turning Basin	Hunting Bayou Turning Basin	29°44.3′N;95°12.1′W.	
11	Lyondell Turning Basin	Sims Bayou Turning Basin	29°43.2′N; 95°14.4′W.	
12	I–610 Bridge	I–610 Bridge	29°43.5′N; 95°16.0′W.	
13	Houston Turning Basin	Buffalo Bayou	29°45.0′N; 95°17.4′W.	

[CGD 90–020, 59 FR 36324, July 15, 1994, as amended by CGD 95–033, 60 FR 28331, May 31, 1995]

§ 161.40 Vessel Traffic Service Berwick Bay.

(a) The VTS area consists of the navigable waters of the following segments of waterways: the Intracoastal Waterway (ICW) Morgan City to Port Allen Alternate Route from Mile Marker 0 to Mile Marker 5; the ICW from Mile Marker 93 west of Harvey Lock (WHL) to Mile Marker 102 WHL; the Atchafalaya River Route from Mile Marker 113 to Mile Marker 122; from Bayou Shaffer Junction (ICW Mile Marker 94.5 WHL) south one statute mile along Bayou Shaffer; and from Berwick Lock northwest one statute mile along the Lower Atchafalaya River.

(b) VTS Special Area. The Berwick Bay VTS Special Area consists of those waters within a 1000 yard radius of the Southern Pacific Railroad Bridge located at Mile .03 MC/PA.

(c) Reporting Points.

TABLE 161.40(C)—VTS BERWICK BAY REPORTING POINTS

Designator	Geographic name	Geographic description	Latitude/longitude	Notes
1	Stouts Pass	Stouts Point Light ''1'' Mile 113–Atchafalaya River.	29°43′47″ N 91°13′25″ W	
2	Berwick Lock	Mile 1.9 MC/PA	29°43′10″ N 91°13′28″ W	If transiting the Lock.
3	Conrad's Point Junction	Buoy ''1'' Mile 1.5 MC/PA	29°42′32″ N 91°13′14″ W	
4	Swift Ships Flat Lake Junction.	Mile 3 MC/PA	29°43′26″ N 91°12′22″ W	
5	South Pacific Railroad Bridge.	Mile 0.3 MC/PA	29°41′34″ N 91°12′44″ W	
6	20 Grant Point Junction	Bayou Boeuf-Atchafalaya R. Mile 95.5 ICW.	29°41′18″ N 91°12′36″ W	
7	ICW	Overhead Power Cable Mile 96.5 ICW.	29°40′43″ N 91°13′18″ W	
8	Wax Bayou Junction	Light ''A'' Mile 98.2W ICW	29°39′29″ N 91°14′46″ W	
9	Shaffer Junction	ICW-Bayou Shaffer Mile 94.5 ICW.	29°41′10″ N 91°11′38″ W	

[CGD 90–020, 59 FR 36324, July 15, 1994, as amended by CGD 95–033, 60 FR 28332, May 31, 1995; USCG–1998–3799, 63 FR 35531, June 30, 1998]

§ 161.45 Vessel Traffic Service St. Marys River.

(a) The VTS area consists of the navigable waters of the St. Marys River and lower Whitefish Bay from 45°57′ N. (De Tour Reef Light) to the south, to 46°38.7′ N. (Ile Parisienne Light) to the north, except the waters of the St. Marys Falls Canal, and to the east along a line from La Pointe to Sims Point, within Potagannissing Bay and Worsley Bay.

(b) Reporting Points.

TABLE 161.45(B)—VTS ST. MARYS RIVER REPORTING POINTS

Designator	Geographic name	Geographic description	Latitude/longitude	Notes
1	Ile Parisienne	Ile Parisienne Light	46°37.3′N; 84°45.9′ W	Downbound Only.
2	Gros Cap Reef	Gros Cap Reefs Light	46°30.6′N; 84°37.1′ W	Upbound Only.
3	Round Island	Round Island Light 32	46°26.9′N; 84°31.7′W.	
4	Pointe Louise	Pointe Louise Light	46°27.8′N; 84°28.2′W.	
5*	West End of Locks	West Center Pierhead Light	46°30.2′N; 84°22.2′ W	Upbound Only.
6	East End of Locks	East Center Pierhead Light	46°30.1′N; 84°20.3′ W	Downbound Only.
7	Mission Point	Light 99	46°29.2′N; 84°18.1′W.	
8	Six Mile Point	Six Mile Point	46°26.1′N; 84°15.4′W.	
9	Ninemile Point	Light 80	46°23.5′N; 84°14.1′W.	
10	West Neebish Channel	Light 29	46°16.9′N; 84°12.5′ W	Downbound Only.
11	Munuscong Lake Junction	Lighted Junction Buoy	46°10.8′N; 84°05.6′W.	
12	De Tour Reef	De Tour Reef Light	46°56.9′N; 83°53.7′W.	

[CGD 90–020, 59 FR 36324, July 15, 1994, as amended by CGD 95–033, 60 FR 28332, May 31, 1995; USCG–1998–3799, 63 FR 35531, June 30, 1998]

§ 161.50 Vessel Traffic Service San Francisco.

The VTS area consists of all the navigable waters of San Francisco Bay Region south of the Mare Island Causeway Bridge and the Petaluma River Entrance Channel Daybeacon 19 and Petaluma River Entrace Channel Light 20 and north of the Dumbarton Bridge; its seaward approaches within a 38 nautical mile radius of Mount Tamalpais (37–55.8′ N., 122–34.6′ W.); and its navigable tributaries as far east as the port of Stockton on the San Joaquin River, as far north as the port of Sacramento on the Sacramento River.

[CGD 90–020, 59 FR 36324, July 15, 1994, as amended by CGD 95–033, 60 FR 28332, May 31, 1995]

§ 161.55 Vessel Traffic Service Puget Sound and the Cooperative Vessel Traffic Service for the Juan de Fuca Region.

The Vessel Traffic Service Puget Sound area consists of the navigable waters of the United States bounded by a line drawn from the Washington State coastline at 48°23′ 08″ N., 124°43′ 37″ W. on Cape Flattery to the Cape Flattery Light at 48°23′ 30″ N., 124°44′ 12″ W. on Tatoosh Island, due west to the U.S. Territorial Sea Boundary; thence northward along the U.S. Territorial Sea Boundary to its intersection with the U.S./Canada International Boundary; thence east along the U.S./Canada International Boundary through the waters known as the Strait of Juan de Fuca, Haro Strait, Boundary Pass, and the Strait of Georgia to the Washington State coastline at 49°00′ 06″ N., 122°45′ 18″ W. (International Boundary Range C Rear Light). This area includes: Puget Sound, Hood Canal, Possession Sound, the San Juan Island Archipelago, Rosario Strait, Guemes Channel, Bellingham Bay, the U.S. waters of the Strait of Juan de Fuca and the Strait of Georgia, and all waters adjacent to the above.

(a) Vessel Traffic Service Puget Sound participates in a U.S./Canadian Cooperative Vessel Traffic Service (CVTS) to jointly manage vessel traffic in the Juan de Fuca Region. The CVTS for the Juan de Fuca Region consists of all waters of the Strait of Juan de Fuca and its offshore approaches, southern Georgia Strait, the Gulf and San Juan Archipelagos, Rosario Strait, Boundary Pass and Haro Strait, bounded on the northwest by 48°35′ 45″ N.; and on the southwest by 48°23′ 30″ N.; and on the west by the rhumb line joining 48°35′ 45″ N., 124°47′ 30″ W. with 48°23′ 30″ N., 124°48′ 37″ W.; and on the northeast in the Strait of Georgia, by a line drawn along 49°N. from Vancouver Island to Semiahmoo Bay; and on the southeast, by a line drawn from McCurdy Point on the Quimper Peninsula to Point Partridge on Whidbey Island. Canadian and United States Vessel Traffic Centers (Tofino, B.C., Canada, Vancouver, BC, Canada and Seattle, WA) manage traffic within the CVTS area irrespective of the International Boundary.

(b) VTS Special Areas. (1) The Rosario Strait VTS Special Area consists of those waters bounded to the south by the center of Precautionary Area ''RB'' (a circular area of 2,500 yards radius centered at 48°26′ 24″ N., 122°45′ 12″ W.), and to the north by the center of Precautionary Area ''C'' (a circular area of 2,500 yards radius centered at 48°40′ 34″ N., 122°42′ 44″ W.; Lighted Buoy ''C''); and

NOTE: The center of precautionary area ''RB'' is not marked by a buoy. All precautionary areas are depicted on National Oceanic and Atmospheric Administration (NOAA) nautical charts.

(2) The Guemes Channel VTS Special Area consists of those waters bounded to the west by Shannon Point on Fidalgo Island and to the east by Southeast Point on Guemes Island.

(c) Additional VTS Special Area Operating Requirements. The following additional requirements are applicable in the Rosario Strait and Guemes Channel VTS Special Areas:

(1) A vessel engaged in towing shall not impede the passage of a vessel of 40,000 dead weight tons or more.

(2) A vessel of less than 40,000 dead weight tons is exempt from the provision set forth in § 161.13(b)(1) of this part.

(3) A vessel of less than 100 meters in length is exempt from the provisions set forth in § 161.13(b)(3) of this part. Approval will not be granted for:

(i) A vessel of 100 meters or more in length to meet or overtake; or cross or operate within 2,000 yards (except when

crossing astern) of a vessel of 40,000 dead weight tons or more; or

(ii) A vessel of 40,000 dead weight tons or more to meet or overtake; or cross or operate within 2,000 yards (except when crossing astern) of a vessel of 100 meters or more in length.

(d) Reporting Point. Inbound vessels in the Strait of Juan de Fuca upon crossing 124–W.

[CGD 90–020, 59 FR 36324, July 15, 1994, as amended by USCG–1998–3799, 63 FR 35531, June 30, 1998]

§ 161.60 Vessel Traffic Service Prince William Sound.

(a) The VTS area consists of the navigable waters of the United States north of a line drawn from Cape Hinchinbrook Light to Schooner Rock Light, comprising that portion of Prince William Sound between 146°30′ W. and 147°20′ W. and includes Valdez Arm, Valdez Narrows and Port Valdez.

(b) The Valdez Narrows VTS Special Area consists of those waters of Valdez Arm, Valdez Narrows, and Port Valdez northeast of a line bearing 307° True from Tongue Point at 61°02′06′ 146°40′W.; and southwest of a line bearing 307° True from Entrance Island Light at 61°05′06″N., 146°36′42″W.

(c) Additional VTS Special Area Operating Requirements. The following additional requirements are applicable in the Valdez Narrows VTS Special Area:

(1) No VMRS User shall proceed north of 61°N. without prior approval of the VTS.

(2) For a vessel listed in paragraph (c)(3) of this section—

(i) Approval to enter this area will not be granted to a vessel when a tank vessel of more than 20,000 deadweight tons is navigating therein;

(ii) A northbound vessel shall remain south of 61°N. until the VTS has granted permission to proceed; and

(iii) A southbound vessel shall remain in Port Valdez east of 146°35′W. and north of 61°06′N. until the VTS has granted permission to proceed.

(3) Paragraph (c)(2) of this section applies to—

(i) A vessel of 1600 gross tons or more; and

(ii) A towing vessel of 8 meters or more in length, except for a vessel performing duties as an escort vessel as defined in 33 CFR Part 168.

(d) Reporting Points.

TABLE 161.60(D)—VTS PRINCE WILLIAM SOUND REPORTING POINTS

Designator	Geographic name	Geographic description	Latitude/longitude	Notes
1A	Cape Hinchinbrook	Cape Hinchinbrook	60°16′ 18″N; 146°45′ 30″ W	Northbound Only.
1B	Schooner Rock	Schooner Rock	60°18′ 42″N; 146°51′ 36″ W	Southbound Only.
2A	Naked Island	Naked Island	60°40′ 00″N; 147°01′ 24″ W	Northbound Only.
2B	Naked Island	Naked Island	60°40′ 00″N; 147°05′ 00″ W	Southbound Only.
3A	Bligh Reef	Bligh Reef Light (Pilot Embark)	60°50′ 36″N; 146°57′ 30″ W	Northbound Only.
3B	Bligh Reef	Bligh Reef Light (Pilot Disembark)	60°51′ 00″N; 147°01′ 24″ W	Southbound Only.
4A	Rocky Point	Rocky Point	60°57′ 48″N; 146°47′ 30″ W	Northbound Only.
4B	Rocky Point	Rocky Point	60°57′ 48″N; 146°50′ 00″ W	Southbound Only.
5	Entrance Island	Entrance Island Light	61°05′ 24″N; 146°37′ 30″W..	

[CGD 90–020, 59 FR 36324, July 15, 1994, as amended by CGD 95–033, 60 FR 28332, May 31, 1995; USCG–1998–3799, 63 FR 35532, June 30, 1998]

PART 162—INLAND WATERWAYS NAVIGATION REGULATIONS

Sec.

162.1 General.
162.15 Manhasset Bay, N.Y.; seaplane restricted area.
162.20 Flushing Bay near La Guardia Airport, Flushing, N.Y.; restricted area.
162.30 Channel of Tuckerton Creek, N.J.; navigation.
162.35 Channel of Christina River, Del.; navigation.
162.40 Inland waterway from Delaware River to Chesapeake Bay, Del. and Md. (Chesapeake and Delaware Canal).
162.65 All waterways tributary to the Atlantic Ocean south of Chesapeake Bay and all waterways tributary to the Gulf of Mexico east and south of St. Marks, Fla.
162.75 All waterways tributary to the Gulf of Mexico (except the Mississippi River, its tributaries, South and Southwest

Passes and the Atchafalaya River) from St. Marks, Fla., to the Rio Grande.
162.80 Mississippi River below mouth of Ohio River, including South and Southwest Passes.
162.85 Yazoo Diversion Canal, Vicksburg, Miss., from its mouth at Kleinston Landing to Fisher Street; navigation.
162.90 White River, Arkansas Post Canal, Arkansas River, and Verdigris River between Mississippi River, Ark., and Catoosa, Okla.; use, administration, and navigation.
162.100 Ohio River at Louisville, KY.
162.105 Missouri River; administration and navigation.
162.110 Duluth-Superior Harbor, Minnesota and Wisconsin.
162.115 Keweenaw Waterway, Mich.
162.117 St. Marys River, Sault Ste. Marie, Michigan.
162.120 Harbors on Lake Michigan.
162.125 Sturgeon Bay and the Sturgeon Bay Ship Canal, Wisc.
162.130 Connecting waters from Lake Huron to Lake Erie; general rules.
162.132 Connecting waters from Lake Huron to Lake Erie; communications rules.
162.134 Connecting waters from Lake Huron to Lake Erie; traffic rules.
162.136 Connecting waters from Lake Huron to Lake Erie; anchorage grounds.
162.138 Connecting waters from Lake Huron to Lake Erie; speed rules.
162.140 Connecting waters from Lake Huron to Lake Erie; miscellaneous rules.
162.145 Monroe Harbor, Mich.
162.150 Maumee Bay and River, Ohio.
162.155 Sandusky and Huron Harbors, Ohio.
162.160 Vermilion, Lorain, Cleveland, Fairport, Ashtabula, and Conneaut Harbors, Ohio.
162.165 Buffalo and Rochester Harbors, New York.
162.175 Black Rock Canal and Lock at Buffalo, New York.
162.195 Santa Monica Bay, Calif.; restricted area.
162.200 Marina del Ray, Calif.; restricted area.
162.205 Suisun Bay, San Joaquin River Sacramento River, and connecting waters, CA.
162.210 Lake Tahoe, Calif.; restricted areas along south shore.
162.215 Lake Tahoe, Nev.; restricted area adjacent to Nevada Beach.
162.220 Hoover Dam, Lake Mead, and Lake Mohave (Colorado River), Ariz.-Nev.
162.225 Columbia and Willamette Rivers, Washington and Oregon; administration and navigation.
162.230 Columbia River, Wash.
162.235 Puget Sound Area, Wash.
162.240 Tongass Narrows, Alaska; navigation.
162.245 Kenai River, Kenai, Alaska; use, administration, and navigation.
162.250 Port Alexander, Alaska; speed of vessels.
162.255 Wrangell Narrows, Alaska; use, administration, and navigation.
162.260 Channel leading to San Juan Harbor, P.R.; use, administration, and navigation.
162.270 Restricted areas in vicinity of Maritime Administration Reserve Fleets.

AUTHORITY: 33 U.S.C. 1231; 49 CFR 1.46.

SOURCE: CGD 75–082, 42 FR 51759, Sept. 29, 1977, unless otherwise noted.

§ 162.1 General.

Geographic coordinates expressed in terms of latitude or longitude, or both, are not intended for plotting on maps or charts whose referenced horizontal datum is the North American Datum of 1983 (NAD 83), unless such geographic coordinates are expressly labeled NAD 83. Geographic coordinates without the NAD 83 reference may be plotted on maps or charts referenced to NAD 83 only after application of the appropriate corrections that are published on the particular map or chart being used.

[CGD 86–082, 52 FR 33811, Sept. 8, 1987]

§ 162.15 Manhasset Bay, N.Y.; seaplane restricted area.

(a) *The restricted area.* An area in Manhasset Bay between the shore at Manorhaven on the north and the southerly limit line of the special anchorage area in Manhasset Bay, west area at Manorhaven (described in § 202.60 of this chapter), on the south; its axis being a line bearing 166°50′ true from latitude 40°50′ 17.337″, longitude 73°43′ 03.877″, which point is on the south side of Orchard Beach Boulevard at Manorhaven; and being 100 feet wide for a distance of 380 feet in a southerly direction from the south side of Orchard Beach Boulevard, and thence flaring to a width of 300 feet at the southerly limit line.

(b) *The regulations.* (1) Vessels shall not anchor or moor within the restricted area.

(2) All vessels traversing the area shall pass directly through without unnecessary delay, and shall give seaplanes the right-of-way at all times.

§162.20 Flushing Bay near La Guardia Airport, Flushing, N.Y.; restricted area.

(a) *The area.* An area in the main channel in Flushing Bay extending for a distance of 300 feet on either side of the extended center line of Runway No. 13–31 at La Guardia Airport.

(b) *The regulations.* (1) All vessels traversing in the area shall pass directly through without unnecessary delay.

(2) No vessels having a height of more than 35 feet with reference to the plane of mean high water shall enter or pass through the area whenever visibility is less than one mile.

§162.30 Channel of Tuckerton Creek, N.J.; navigation.

(a) Power boats or other vessels propelled by machinery shall not proceed at any time within the limits of these waters at a greater speed than 8 statute miles per hour.

§162.35 Channel of Christina River, Del.; navigation.

(a) That vessels of over 20 tons capacity, propelled by machinery, shall not proceed at any time within the limits of these waters at a greater speed than 8 statute miles per hour.

§162.40 Inland waterway from Delaware River to Chesapeake Bay, Del. and Md. (Chesapeake and Delaware Canal).

(a) *Applicability.* The regulations in this section are applicable to that part of the inland waterway from Delaware River to Chesapeake Bay, Del. and Md., between Reedy Point, Delaware River, and Old Town Point Wharf, Elk River.

(b) *Speed.* No vessel in the waterway shall be raced or crowded alongside another vessel. Vessels of all types, including pleasure craft, are required to travel at all times at a safe speed throughout the canal and its approaches so as to avoid damage by suction or wave wash to wharves, landings, riprap protection, or other boats, or injury to persons. Pilots and vessel operators transiting the canal and its approaches are warned that violation of this rule may result in having their privilege to transit the canal suspended. Passages of vessels through the canal will be monitored and specific cases will be investigated where damage by suction or wave wash does occur. Owners and operators of yachts, motorboats, rowboats and other craft are cautioned that large deep draft ocean-going vessels and other large commercial vessels ply the canal, and such owners and operators should be particularly careful to moor or anchor well away from the main ship channels, with moorings and lines which are sufficient and proper.

(c) *Right-of-way.* All vessels proceeding with the current shall have the right-of-way over those proceeding against the current. Large vessels or tows must not overtake and attempt to pass other large vessels or tows in the waterway. All small pleasure craft shall relinquish the right-of-way to deeper draft vessels, which have a limited maneuvering ability due to their draft and size.

(d) *Stopping in waterway.* Vessels will not be permitted to stop or anchor in the ship channel.

(e) *Water skiing.* Water skiing in the waterway is prohibited between Reedy Point and Welch Point.

(f) *Sailboats.* Transiting the canal by vessels under sail is not permitted between Reedy Point and Welch Point.

NOTE: The Corps of Engineers also has regulations dealing with this section in 33 CFR Part 207.

§162.65 All waterways tributary to the Atlantic Ocean south of Chesapeake Bay and all waterways tributary to the Gulf of Mexico east and south of St. Marks, Fla.

(a) *Description.* This section applies to the following:

(1) *Waterways.* All navigable waters of the United States, natural or artificial, including bays, lakes, sounds, rivers, creeks, intracoastal waterways, as well as canals and channels of all types, which are tributary to or connected by other waterways with the Atlantic Ocean south of Chesapeake Bay or with the Gulf of Mexico east and south of St. Marks, Florida.

(2) *United States property.* All river and harbor lands owned by the United States in or along the waterways described in paragraph (a)(1) of this paragraph, including lock sites and all

structures thereon, other sites for Government structures and for the accommodation and use of employees of the United States, and rights of way and spoil disposal areas to the extent of Federal interest therein.

(3) *Vessels and rafts.* The term ''vessel'' as used in this section includes all floating things moved over these waterways other than rafts.

(b) *Waterways—(*1) *Fairway.* A clear channel shall at all times be left open to permit free and unobstructed navigation by all types of vessels and rafts that normally use the various waterways or sections thereof. The District Commander may specify the width of the fairway required in the various waterways under his charge.

(2) *Stoppage in waterway, anchorage or mooring.* (i) No vessels or rafts shall anchor or moor in any of the land cuts or other narrow parts of the waterway, except in case of an emergency. Whenever it becomes necessary for a vessel or raft to stop in any such portions of the waterway it shall be securely fastened to one bank and as close to the bank as possible. This shall be done only at such a place and under such conditions as will not obstruct or prevent the passage of other vessels or craft. Stoppages shall be only for such periods as may be necessary.

(ii) No vessel or raft will be allowed to use any portion of the fairway as a mooring place except temporarily as authorized above without the written permission from the District Commander.

(iii) When tied up, all vessels must be moored by bow and stern lines. Rafts and tows shall be secured at sufficiently close intervals to insure their not being drawn away from the bank by winds, currents or the suction of passing vessels. Tow lines shall be shortened so that the different parts of the tow shall be as close together as possible. In narrow sections, no vessel or raft shall be tied abreast of another.

(iv) Lights shall be displayed in accordance with provisions of the Inland Rules and the Pilot Rules for Inland Waters.

(v) No vessel, even if fastened to the bank as prescribed in paragraph (b)(2)(i) of this section, shall be left without a sufficient crew to care for it properly.

(vi) Vessels will not be permitted to load or unload in any of the land cuts except as a regular established landing or wharf without written permission secured in advance from the District Commander.

(vii) No vessel, regardless of size, shall anchor in a dredged channel or narrow portion of a waterway for the purpose of fishing, if navigation is obstructed, thereby.

(viii) Except in cases of emergency the dropping of anchors, weights, or other ground tackle, within areas occupied by submarine cable or pipe crossings, is prohibited. Such crossings will ordinarily be marked by signboards on each bank of the shore or indicated on coast charts.

(3) *Speed.* (i) Vessels shall proceed at a speed which will not endanger other vessels or structures and will not interfere with any work in progress incident to maintaining, improving, surveying or marking the channel.

(ii) Official signs indicating limiting speeds through critical portions of the waterways shall be strictly obeyed.

(iii) Vessels approaching and passing through a bridge shall so govern their speed as to insure passage through the bridge without damage to the bridge or its fenders.

(4) *Assembly and handling of tows.* (i) All vessels drawing tows and equipped with rudders shall use two tow lines or a bridle and shorten them to the greatest possible extent so as to have full control at all times. The various parts of a tow shall be securely assembled with the individual units connected by lines as short as practicable. If necessary, as in the case of lengthy or cumbersome tows or tows in restricted channels, the District Commander may require that tows be broken up and may require the installation of a rudder, drag or other approved steering device on the tow in order to avoid obstructing navigation or damaging the property of others, including aids to navigation maintained by the United States or under its authorization, by collision or otherwise.

(ii) No tow shall be drawn by a vessel that has insufficient power or crew to

permit ready maneuverability and safe handling.

(iii) Tows desiring to pass a bridge shall approach the opening along the axis of the channel so as to pass through without danger of striking the bridge or its fenders. No vessel or tow shall navigate through a drawbridge until the movable span is fully opened.

(iv) In the event that it is evident to the master of a towing vessel that a tow cannot be safely handled through a bridge, it will be brought to anchor and the towed vessels will be taken through the bridge in small units, or singly if necessary, or the tow will wait until navigation conditions have improved to such an extent that the tow can pass through the bridge without damage.

(5) *Projections from vessels.* No vessel carrying a deck load which overhangs or projects over the side of said vessel, or whose rigging projects over the side of the vessel so as to endanger passing vessels, wharves or other property, will enter or pass through any of the narrow parts of the waterway.

(6) *Meeting and passing.* Vessels, on meeting or overtaking, shall give the proper signals and pass in accordance with the Inland Rules and the Pilot Rules for Inland Waters. Rafts shall give to vessels the side demanded by proper signal. All vessels approaching dredges or other plant engaged on improvements to a waterway, shall give the signal for passing and slow down sufficiently to stop if so ordered or if no answering signal is received. On receiving the answering signal, they shall then proceed to pass at a speed sufficiently slow to insure safe navigation.

NOTE: The Corps of Engineers also has regulations dealing with this section in 33 CFR Part 207.

[CGD 75–082, 42 FR 51759, Sept. 29, 1977, as amended by CGD 93–072, 59 FR 39963, Aug. 5, 1994]

§ 162.75 All waterways tributary to the Gulf of Mexico (except the Mississippi River, its tributaries, South and Southwest Passes and Atchafalaya River) from St. Marks, Fla., to the Rio Grande.

(a) The regulations in this section shall apply to:

(1) *Waterways.* All navigable waters of the U.S. tributary to or connected by other waterways with the Gulf of Mexico between St. Marks, Fla., and the Rio Grande, Tex. (both inclusive), and the Gulf Intracoastal Waterway; except the Mississippi River, its tributaries, South and Southwest Passes, and the Atchafalaya River above its junction with the Morgan City-Port Allen Route.

(2) *Bridges, wharves, and other structures.* All bridges, wharves, and other structures in or over these waterways.

(3) *Vessels.* The term ''vessels'' as used in this section includes all floating craft other than rafts.

(b) Waterways:

(1) A clear channel shall at all times be left open to permit free and unobstructed navigation by all types of vessels and tows normally using the various waterways covered by the regulations of this section

(2) Fairway: The District Commander may specify the width of the fairway required in the various waterways under his charge.

(3) Anchoring or mooring:

(i) Vessels or tows shall not anchor or moor in any of the land cuts or other narrow parts of the waterway, except in an emergency, or with permission of the District Commander. Whenever it becomes necessary for a vessel or tow to stop in any such protions of the waterway, it shall be securely fastened to one bank and as close to the bank as possible. This shall be done only at such a place and under such conditions as will not obstruct or prevent the passage of other vessels or tows. Stoppages shall be only for such periods as may be necessary.

(ii) When tied up individually, all vessels and tows shall be moored by bow and stern lines. Tows shall be secured at sufficiently frequent intervals to insure their not being drawn away form the bank by winds, currents, or the suction of passing vessels. Lines shall be shortened so that the various barges in a tow will be as close together as possible.

(iii) Lights shall be displayed in accordance with provisions of the Inland Rules and the Pilot Rules for Inland Waters.

(iv) Whenever any vessel or tow is moored to the bank (paragraph (b)(3)(i)

of this section) at least one crew member shall always remain on board to see that proper signals are displayed and that the vessel or tow is properly moored at all times.

(v) No vessel, regardless of size, shall anchor in a dredged channel or narrow portion of a waterway for the purpose of fishing if navigation is obstructed thereby.

(4) Speed: Speeding in narrow sections is prohibited. Official signs indicating limited speeds shall be obeyed. Vessels shall reduce speed sufficiently to prevent damage when passing over vessels or structures in or along the waterway.

(5) Size, assembly, and handling of tows:

(i) On waterways 150 feet wide or less, tows which are longer than 1,180 feet, including the towing vessel, but excluding the length of the hawser, or wider than one-half of the bottom width of the channel or 55 feet, whichever is less will not be allowed, except when the District Commander has given special permission or the waterway has been exempted from these restrictions by the District Commander. Before entering any narrow section of the Gulf Intracoastal Waterway, tows in excess of one-half the channel width, or 55 feet, will be required to stand by until tows which are less than one-half the channel width or 55 feet wide have cleared the channel. When passing is necessary in narrow channels, overwidth tows shall yield to the maximum. Separate permission must be received from the District Commander for each overlength or overwidth movement. In addition, the following exceptions are allowed:

(ii) Gulf Intracoastal Waterway—Between mile 6.2 EHL (Inner Harbor Navigation Canal Lock) and mile 33.6 EHL tows of 78 feet in width will be allowed.

(iii) Gulf Intercoastal Waterway—Between mile 33.6 EHL and the Mobile Bay Ship Channel, tows of 108 feet in width will be allowed if under 750 feet in length including the towboat but excluding the length of the hawser.

(iv) Gulf Intracoastal Waterway—Mobile Bay Ship Channel to St. Marks, Fla., for tows made up of empty barges on the off or shallow side, a width of 75 feet will be allowed.

(v) All vessels pulling tows not equipped with rudders in restricted channels and land cuts shall use two towlines, or a bridle on one towline, shortened as much as safety of the towing vessel permits, so as to have maximum control at all times. The various parts of a tow shall be securely assembled with the individual units connected by lines as short as practicable. In open water, the towlines and fastenings between barges may be lengthened so as to accommodate the wave surge. In the case of lengthy or cumbersome tows, or tows in restricted channels, the District Commander may require that tows be broken up, and may require the installation of a rudder or other approved steering device on the tow in order to avoid obstructing navigation or damaging the property of others. Pushing barges with towing vessel astern, towing barges with towing vessel alongside, or pushing and pulling barges with units of the tow made up both ahead and astern of the towing vessel are permissible provided that adequate power is employed to keep the tows under full control at all times. No tow shall be drawn by a vessel that has insufficient power or crew to permit ready maneuverability and safe handling.

(vi) All tows navigating the Pass Manchac bridges in Louisiana are limited to no more than two barges, not to exceed a combined tow length of 400 feet (excluding the towboat). Vessel operators for tows exceeding these limits must request and receive permission from the COTP New Orleans prior to navigating the bridges. Requests should be made by telephoning the COTP at 504–589–7101. Any decision made by the COTP is final agency action.

(6) Projections from vessels: Vessels or tows carrying a deck load which overhangs or projects over the side, or whose rigging projects over the side, so as to endanger passing vessels, wharves, or other property, shall not enter or pass through any of the narrow parts of the waterway without prior approval of the District Commander.

(7) Meeting and passing: Passing vessels shall give the proper signals and

pass in accordance with the International Rules, the Inland Rules and the Pilot Rules for Inland Waters, where applicable. At certain intersections where strong currents may be encountered, sailing directions may be issued through navigation bulletins or signs posted on each side of the intersections.

NOTE: The Corps of Engineers also has regulations dealing with this section in 33 CFR 207.

[CGD 75–082, 42 FR 51759, Sept. 29, 1977, as amended by CGD 78–050, 45 FR 43167, June 26, 1980]

§162.80 Mississippi River below mouth of Ohio River, including South and Southwest passes.

(a) *Mooring on the Mississippi River between miles 311.5 AHP and 340.0 AHP.* (1) No vessel or craft shall moor along either bank of the Mississippi River between miles 311.5 AHP and mile 340.0 AHP except in case of an emergency, pursuant to an approved navigation permit, or as authorized by the District Commander. Vessels may be moored any place outside the navigation channel in this reach in case of an emergency and then for only the minimum time required to terminate the emergency. When so moored, all vessels shall be securely tied with bow and stern lines of sufficient strength and fastenings to withstand currents, winds, wave action, suction from passing vessels or any other forces which might cause the vessels to break their moorings. When vessels are so moored, a guard shall be on board at all times to ensure that proper signals are displayed and that the vessels are securely and adequately moored.

(2) Vessels may be moored any time at facilities constructed in accordance with an approved navigation permit or as authorized by the District Commander. When so moored, each vessel shall have sufficient fastenings to prevent the vessels from breaking loose by wind, current, wave action, suction from passing vessels or any other forces which might cause the vessel to break its mooring. The number of vessels in one fleet and the width of the fleet of vessels tied abreast shall not extend into the fairway or be greater than allowed under the permit.

(3) Mariners should report immediately by radio or fastest available means to the lockmaster at Old River Lock or to any government patrol or survey boat in the vicinity any emergency mooring or vessels drifting uncontrolled within the area described in paragraph (a)(1) of this section. It is the responsibility and duty of the master of a towing vessel releasing or mooring a vessel in this reach of the Mississippi River to report such action immediately.

(b) *Mooring on Mississippi River below Baton Rouge, La., including South and Southwest Passes.* (1) When tied up individually or in fleets, vessels shall be moored with sufficient lines and shore fastenings to insure their remaining in place and withstanding the action of winds, currents and the suction of passing vessels.

NOTE: The Corps of Engineers also has regulations dealing with this section in 33 CFR Part 207.

(Sec. 7, 38 Stat. 1053, as amended, (33 U.S.C. 471); Sec. 6(g)(1)(A) 80 Stat 937, (49 U.S.C. 1655(g)(1)(A); Sec. 12, 92 Stat. 1471, (33 U.S.C. 1231); 49 CFR 1.46 (c)(1) and (n)(4))

[CGD 75–082, 42 FR 51759, Sept. 29, 1977, as amended by CGD 77–028, 46 FR 49851, Oct. 8, 1981; CGD8 87–09, 53 FR 15555, May 2, 1988]

§162.85 Yazoo Diversion Canal, Vicksburg, Miss., from its mouth at Kleinston Landing to Fisher Street; navigation.

(a) *Speed.* Excessive speeding is prohibited. A vessel shall reduce its speed sufficiently to prevent any damage when approaching another vessel in motion or tied up, a wharf or other structure, works under construction, plant engaged in river and harbor improvement, levees, floodwalls withstanding floodwaters, buildings submerged or partially submerged by high waters, or any other structure or improvement likely to be damaged by collision, suction, or wave action.

NOTE: The Corps of Engineers also has regulations dealing with this section in 33 CFR Part 207.

§ 162.90 White River, Arkansas Post Canal, Arkansas River, and Verdigris River between Mississippi River, Ark., and Catoosa, Okla.; use, administration, and navigation.

(a) The regulations in this section shall apply to:

(1) *Waterways.* White River between Mississippi River and Arkansas Post Canal, Ark.; Arkansas Post Canal, Ark.; Arkansas River between Arkansas Post Canal, Ark., and Verdigris River, Okla.; Verdigris River between Arkansas River and Catoosa, Okla.; and reservoirs on these waterways between Mississippi River Ark., and Catoosa, Okla.

(2) *Bridges, wharves and other structures.* All bridges, wharves, and other structures in or over the waterways described in paragraph (a)(1) of this section.

(3) *Vessels and rafts.* The term ''vessels'' as used in this section includes every description of watercraft used, or capable of being used, as a means of transportation on water, other than rafts.

(b) Waterways:

(1) *Fairway.* A clear channel shall at all times be left open to permit free and unobstructed navigation by all types of vessels and rafts that normally use the various waterways or sections thereof. The District Commander may specify the width of the fairway required in the waterways under his charge.

(2) *Anchoring or mooring in waterway.* (i) No vessels or rafts shall anchor or moor in any of the land cuts or other narrow parts of the waterway, except in an emergency. Whenever it becomes necessary for a vessel or raft to stop in any such portions of the waterway, it shall be securely fastened to one bank and as close to the bank as possible. This shall be done only at such a place and under such conditions as will not obstruct or prevent the passage of other vessels or rafts. Stoppages shall be only for such periods as may be necessary.

(ii) Except temporarily, as authorized in paragraph (b)(2)(i) of this section, no vessel or raft will be allowed to use any portion of the fairway as a mooring place without written permission from the District Commander.

(iii) When tied up individually, all vessels shall be moored by bow and stern lines. Rafts and tows shall be secured at sufficiently close intervals to insure their not being drawn away from the bank by winds, currents, or the suction of passing vessels. Towlines shall be shortened so that the different parts of the tow will be as close together as possible. In narrow sections, no vessel or raft shall be tied abreast of another if the combined width of vessels or rafts is greater than 70 feet.

(iv) When a vessel is moored under an emergency condition, as provided in paragraph (b)(2)(i) of this section, at least one crew member shall remain in attendance to display proper lights and signals and tend the mooring lines. The crew member shall be provided with an adequate means of communication or signalling a warning in the event that, for any reason, the vessel or tow should go adrift. Immediately after completion of the emergency mooring, the lockmaster of the first lock downstream shall be notified of the character and cargo of the vessel and the location of such mooring.

(v) Vessels will not be permitted to load or unload in any of the land cuts, except at a regular established landing or wharf, without written permission secured in advance from the District Commander.

(vi) Except in an emergency, no vessel or raft shall anchor over revetted banks of the waterway, nor shall any type vessel except launches and other small craft land against banks protected by revetment except at regular commercial landings.

(3) *Speed.* (i) Excessive speed in narrow sections is prohibited. Official signs indicating limiting speeds through critical sections shall be strictly obeyed.

(ii) When approaching and passing through a bridge, all vessels and rafts, regardless of size, shall control their speed so as to insure that no damage will be done to the bridge or its fenders.

(iii) Within the last mile of approach to unattended, normally open automatic, movable span bridges, the factor of river flow velocity, of vessel (and tow) velocity, and of vessel power and

crew capability are never to be permitted to result in a condition whereby the movement of vessel (and tow) cannot be completely halted or reversed within a 3-minute period.

(iv) A vessel shall reduce its speed sufficiently to prevent any damage when approaching another vessel in motion or tied up, a wharf or other structure, works under construction, plant engaged in river and harbor improvement, levees withstanding floodwaters, buildings submerged or partially submerged by high waters, or any other manner of structure or improvements likely to be damaged by collision, suction, or wave action.

(4) *Assembly and handling of tows.* (i) All vessels drawing tows not equipped with rudders in restricted channels and land cuts shall use two towlines, or a bridlse on one towline, shortened to the greatest possible extent so as to have maximum control at all times. The various parts of a tow shall be securely assembled with the individual units connected by lines as short as practicable. In open water, the towlines and fastenings between barges may be lengthened so as to accommodate the wave surge. In the case of length or cumbersome tows, or tows in restricted channels, the District Commander may require that tows be broken up, and may require the installation of a rudder or other approved steering device on the tow in order to avoid obstructing navigation or damaging the property of others. Pushing barges with towing vessel astern, towing barges with towing vessel alongside, or pushing and pulling barges with units of the tow made up both ahead and astern of the towing vessel is permissible provided that adequate power is employed to keep the tow under full control at all times.

(ii) No tow shall be drawn by a vessel that has insufficient power or crew to permit ready maneuverability and safe handling.

(iii) No vessel or tow shall navigate through a drawbridge until the movable span is fully opened.

(5) *Projections from vessels.* No vessels carrying a deck load which overhangs or projects over the side, or whose rigging projects over the side, so as to endanger passing vessels, wharves, or other property, shall enter or pass through any of the narrow parts of the waterway.

(6) *Meeting and passing.* Vessels on meeting or overtaking shall give the proper signals and pass in accordance with the Inland Rules and the Pilot Rules for Inland Waters. Rafts shall give to vessels the side demanded by proper signal. All vessels approaching dredges or other plant engaged on improvements to a waterway shall give the signal for passing and slow down sufficiently to stop if so ordered or if no answering signal is received. On receiving the answering signal, they shall then pass at a speed sufficiently slow to insure safe navigation. Vessels approaching an intersection or bend where the view is obstructed must exercise due caution. At certain intersections where strong currents may be encountered, sailing directions may be issued from time to time through navigation bulletins or signs posted on each side of the intersections which must be observed.

NOTE: The Corps of Engineers also has regulations dealing with this section in 33 CFR Part 207.

§ 162.100 Ohio River at Louisville, KY.

(a) *Emergency Mooring Buoys.* The U.S. Army Corp of Engineers has established four pairs of emergency mooring bouys. Each buoy is 10 feet in diameter with retro-reflective sides. The two buoys which comprise each pair are 585 feet apart and are located approximately at:

(1) Indiana Bank—Mile 582.3 (near 18 Mile Island);

(2) Six Mile Island—Mile 597.5;

(3) Six Mile Island—Mile 598.2; and

(4) Kentucky Bank—Mile 599.8 (Cox's Park).

NOTE: All buoys, except those at Six Mile Island—Mile 598.2, are removed between May 1 and September 30. Due to the close proximity of the municipal water intakes, mooring of tank vessels laden with petroleum products or hazardous materials is not authorized on the Kentucky Bank, Mile 599.8 (Cox's Park).

(b) *The regulations.* A vessel must not use the emergency mooring buoys that have been established by the U.S. Army Corps of Engineers, unless specifically authorized. The Captain of the Port, upon request, may authorize the

use of the emergency mooring buoys by downbound towing vessels that are awaiting Vessel Traffic Center approval to proceed.

[CGD 90–020, 59 FR 36333, July 15, 1994]

§ 162.105 Missouri River; administration and navigation.

(a) *Supervision.* The District Commander, Eighth Coast Guard District, has certain administrative supervision overreaches of the river within the limits of his district and is charged with the enforcement under his direction of emergency regulations to govern navigation on the river.

(b) *Navigation.* During critical flood stages on any particular limited reach of the Missouri River when lives, floating plant, or major shore installations and levees are endangered, the District Commander in charge of the locality shall have the authority to declare the reach of the river closed to navigation or to prescribe temporary speed regulations whenever it appears to him that such action is necessary to prevent immediate human suffering or to mitigate major property damage or destruction from wave action. The period of closure and all speed regulations prescribed by the District Commander shall be for the duration of the emergency as determined by the District Commander and shall be terminated at the earliest practicable time that improved river conditions permit.

[CGD 75–082, 42 FR 51759, Sept. 29, 1977, as amended by USCG–1998–3799, 63 FR 35532, June 30, 1998]

§ 162.110 Duluth-Superior Harbor, Minnesota and Wisconsin.

(a) No vessel greater than 100 feet in length may exceed 8 miles per hour in Duluth-Superior Harbor.

(b) In the Duluth Ship Canal:

(1) No vessel may meet or overtake another vessel if each vessel is greater than 150 feet in length (including tug and tow combinations).

(2) An inbound vessel has the right of way over an outbound vessel.

[CGD 79–151, 46 FR 7960, Jan. 26, 1981]

§ 162.115 Keweenaw Waterway, Mich.

(a) No vessel greater than 40 feet in length may exceed 8 miles per hour between Lily Pond and Pilgrim Point.

(b) No vessel may use either the Portage River harbor of refuge or the Lily Pond harbor of refuge longer than 24 hours unless given permission to do so by the Captain of the Port.

[CGD 79–151, 46 FR 7960, Jan. 26, 1981]

§ 162.117 St. Marys River, Sault Ste. Marie, Michigan.

(a) *The area.* The waters of the St. Marys River and lower Whitefish Bay from 45°5′ N. (De Tour Reef Light) to the south, to 46°38.7′ N. (Ile Parisienne Light) to the north, except the waters of the St. Marys Falls Canal, and to the east along a line from La Pointe to Sims Point, within Potagannissing Bay and Worsley Bay.

(b) *Definitions.* As used in this section:

Two-way route means a directional route within defined limits inside which two-way traffic is established, and which is intended to improve safety in waters where navigation is difficult.

Two-way traffic means that traffic flow is permitted in opposing directions, but a vessel may not meet, cross, nor overtake any other vessel in such a manner that it would be abreast of more than one other vessel within the defined limits of a waterway.

(c) Anchoring Rules.

(1) A vessel must not anchor:

(i) within the waters between Brush Point and the waterworks intake crib off Big Point southward of the Point Aux Pins range; or

(ii) within 0.2 nautical miles of the intake crib off Big Point.

(2) In an emergency, vessels may anchor in a dredged channel. Vessels shall anchor as near to the edge of the channel as possible and shall get underway as soon as the emergency ceases, unless otherwise directed. Vessel Traffic Services St. Marys River must be advised of any emergency anchoring as soon as is practicable.

(3) Vessels collected in any part of the VTS Area by reason of temporary closure of a channel or an impediment

to navigation shall get underway and depart in the order in which they arrived, unless otherwise directed by Vessel Traffic Service St. Marys River. Vessel Traffic Service St. Marys River may advance any vessel in the order of departure to expedite the movement of mails, passengers, cargo of a perishable nature, to facilitate passage of vessels through any channel by reason of special circumstance, or to facilitate passage through the St. Marys Falls Canal.

(d) *Traffic Rules.* (1) A vessel must proceed only in the established direction of traffic flow in the following waters:

(i) West Neebish Channel from Buoy ''53'' to Buoy ''1''—downbound traffic only;

(ii) Pipe Island Course from Sweets Point to Watson Reefs Light-downbound traffic only.

(iii) Middle Neebish Channel from Buoy ''2'' to Buoy ''76''—upbound traffic only; and

(iv) Pipe Island Passage to the east of Pipe Island Shoal and north of Pipe Island Twins from Watson Reefs Light to Sweets Point—upbound traffic only.

(2) A vessel 350 feet or more in length must not overtake or approach within .2 nautical miles of another vessel proceeding in the same direction in the following waterways:

(i) West Neebish Channel between Nine Mile Point and Munuscong Lake Junction Lighted Bell Buoy;

(ii) Middle Neebish Channel between Munuscong Lake Junction Lighted Bell Buoy and Nine Mile Point; and

(iii) Little Rapids Cut from Six Mile Point to Buoy ''102''.

(3) When two-way traffic is authorized in Middle Neebish Channel, a vessel 350 feet or more in length must not meet, cross, or overtake another vessel at:

(i) Johnson Point from Buoy ''18'' to Buoy ''22'';

(ii) Mirre Point from Buoy ''26'' to Buoy ''28''; or

(iii) Stribling Point from Buoy ''39'' to Buoy ''43''.

(4) Paragraph (d)(2) of this section does not apply to a vessel navigating through an ice field.

(e) *Winter Navigation.* During the winter navigation season, the following waterways are normally closed:

(1) West Neebish Channel, from Buoy ''53' to Buoy ''1'';

(2) Pipe Island Passage to the east of Pipe Island Shoal; and

(3) North of Pipe Island Twins, from Watson Reef Light to Sweets Point.

(f) *Alternate Winter Navigation Routes.* (1) When West Neebish Channel is closed, Middle Neebish Channel (from Buoy ''2'' to Buoy ''76'') will be open either as a two-way route or an alternating one way traffic lane.

(i) When Middle Neebish Channel is a two-way route:

(A) An upbound vessel must use the easterly 197 feet of the channel. However, a vessel of draft 20 feet or more must not proceed prior to Vessel Traffic Center approval; and

(B) A downbound vessel must use the westerly 295 feet of the channel.

(ii) When Middle Neebish Channel is an alternating one-way traffic lane. A vessel must use the westerly 295 feet of the channel in the established direction of traffic flow.

(2) When Pipe Island Passage is closed, Pipe Island Course is a two-way route.

NOTE: The Vessel Traffic Service closes or opens these channels as ice conditions require after giving due consideration to the protection of the marine environment, waterway improvements, aids to navigation, the need for cross channel traffic (e.g., ferries), the availability of icebreakers, and the safety of the island residents who, in the course of their daily business, must use naturally formed ice bridges for transportation to and from the mainland. Under normal seasonal conditions, only one closing each winter and one opening each spring are anticipated. Prior to closing or opening these channels, interested parties including both shipping entities and island residents, will be given at least 72 hours notice by the Coast Guard.

(g) *Speed Rules.* (1) The following speed limits indicate speed over the ground. Vessels must adhere to the following speed limits:

TABLE 162.117(G)—ST. MARYS RIVER SPEED RULES

Maximum speed limit between	Mph	Kts
De Tour Reef Light and Sweets Point Light	14	12.2

TABLE 162.117(G)—ST. MARYS RIVER SPEED RULES—Continued

Maximum speed limit between	Mph	Kts
Round Island Light and Point Aux Frenes Light "21"	14	12.2
Munuscong Lake Lighted Buoy "8" and Everens Point	12	10.4
Everens Point and Reed Point	9	7.8
Reed Point and Lake Nicolet Lighted Buoy "62"	10	8.7
Lake Nicolet Lighted Buoy "62" and Lake Nicolet Light "80"	12	10.4
Lake Nicolet Light "80" and Winter Point (West Neebish Channel)	10	8.7
Lake Nicolet Light "80" and Six Mile Point Range Rear Light	10	8.7
Six Mile Point Range Rear Light and lower limit of the St. Marys Falls Canal		
Upbound	8	7.0
Downbound	10	8.7
Upper limit of the St. Marys Falls Canal and Point Aux Pins Main Light	12	10.4

Note: A vessel must not navigate any dredged channel at a speed of less than 5 statute miles per hour (4.3 knots).

(2) Temporary speed limit regulations may be established by Commanding Officer Vessel Traffic Service St. Marys River. Notice of the temporary speed limits and their effective dates and termination are published in the FEDERAL REGISTER and Local Notice to Mariners. These temporary speed limits, if imposed, will normally be placed in effect and terminated during the winter navigation season.

(h) *Towing Requirement.* A towing vessel must: (1) Maintain positive control of its tow south of Gros Cap Reef Light;

(2) Not impede the passage of any other vessel;

(3) Not tow a vessel of 200 feet or less in length with a tow line longer than 250 feet; and

(4) Not tow a vessel of 200 feet or more in length with a tow line longer than the length of the towed vessel plus 50 feet.

[CGD 90–020, 59 FR 36333, July 15, 1994, as amended by CGD 95–033, 60 FR 28333, May 31, 1995; USCG–1998–3799, 63 FR 35532, June 30, 1998]

§ 162.120 Harbors on Lake Michigan.

(a) No vessel greater than 40 feet in length may exceed 8 miles per hour in the harbors of Michigan City, Indiana; St. Joseph, South Haven, Saugatuck, Holland (Lake Macatawa), Grand Haven, Muskegon, White Lake, Pentwater, Ludington, Manistee, Portage Lake (Manistee County), Frankfort, Charlevois, and Petroskey, Michigan.

(b) No vessel greater than 40 feet in length may exceed 4 miles per hour in the harbors of Menominee, Michigan and Wisconsin; Algoma, Kewaunee, Two Rivers, Manitowac, Sheboygan, Port Washington, Milwaukee, Racine, Kenosha and Green Bay, Wisconsin; and Waukegan, Illinois.

[CGD 79–151, 46 FR 7960, Jan. 26, 1981]

§ 162.125 Sturgeon Bay and the Sturgeon Bay Ship Canal, Wisc.

(a) In the Sturgeon Bay Ship Canal:

(1) No vessel may exceed 5 miles per hour.

(2) No vessel greater than 150 feet in length (including tug and tow combinations) may come about.

(3) No vessel 65 feet or greater in length (including tug and tow combinations) may either:

(i) Enter or pass through the canal two or more abreast; or

(ii) Overtake another vessel.

(4) No vessel may anchor or moor unless given permission to do so by the Captain of the Port.

(5) Each vessel must keep to the center, except when meeting or overtaking another vessel.

(b) In Sturgeon Bay and the Sturgeon Bay Ship Canal:

(1) Each laden vessel under tow must be towed with at least two towlines. Each towline must be shortened to the extent necessary to provide maximum control of the tow.

(2) Each unladen vessel may be towed with one towline.

(3) No towline may exceed 100 feet in length.

(4) No vessel may tow another vessel alongside.

(5) No vessel may tow a raft greater than 50 feet in width.

NOTE: The Corps of Engineers also has regulations dealing with these areas in 33 CFR Part 207.

[CGD 79–151, 46 FR 7960, Jan. 26, 1981]

§ 162.130 Connecting waters from Lake Huron to Lake Erie; general rules.

(a) *Purpose.* The regulations in §§ 162.130 through 162.140 prescribe rules for vessel operation in U.S. waters connecting Lake Huron to Lake Erie (including the River Rouge) to prevent

collisions and groundings, to protect waterway improvements, and to protect these waters from environmental harm resulting from collisions and groundings.

NOTE: The Canadian Government has issued similar regulations which apply in the Canadian portion of the waterway. Provisions which apply only in Canadian waters are noted throughout the text.

(b) *Applicability*. (1) Unless otherwise specified, the rules in §§ 162.130 through 162.140 apply to all U.S. vessels and all other vessels in U.S. waters.

(2) The speed rules in § 162.138 apply to vessels 20 meters or more in length.

(3) The communication rules in § 162.132, the traffic rules in § 162.134, except for § 162.134(c)(2), and the anchorage rules in § 162.136 apply to the following vessels:

(i) Vessels of 20 meters or more in length;

(ii) Commercial vessels more than 8 meters in length engaged in towing another vessel astern, alongside, or by pushing ahead; and

(iii) Each dredge and floating plant.

(4) The traffic rules contained in § 162.134(c)(2) apply to the following vessels:

(i) Sailing vessels of 20 meters or more in length;

(ii) Power driven vessels of 55 meters or more in length;

(iii) Vessels engaged in towing another vessel astern, alongside or by pushing ahead; and

(iv) Each dredge and floating plant.

(c) *Definitions*. As used in §§ 162.130 through 162.140:

Captain of the Port means the United States Coast Guard Captain of the Port of Detroit, Michigan.

Detroit River means the connecting waters from Windmill Point Light to the lakeward limits of the improved navigation channels at the head of Lake Erie.

District Commander means Commander, Ninth Coast Guard District, Cleveland, Ohio.

Master means the licensed master or operator, the person designated by the master or operator to navigate the vessel, or, on a vessel not requiring licensed personnel, the person in command of the vessel.

River Rouge means the waters of the Short Cut Canal and the River Rouge from Detroit Edison Cell Light 1 to the head of navigation.

St. Clair River means the connecting waters from the lakeward limit of the improved navigation channel at the lower end of Lake Huron to St. Clair Flats Canal Light 2.

SARNIA TRAFFIC means the Canadian Coast Guard traffic center at Sarnia Ontario.

(d) *Laws and regulations not affected*. The regulations in §§ 162.130 through 162.140 do not relieve the owners or operators of vessels from complying with any other laws or regulations relating to navigation on the Great Lakes and their connecting or tributary waters.

(e) *Delegations*. The District Commander, in coordination with appropriate Canadian officials, may make local arrangements that do not conflict with these regulations in the interest of safety of operations, to facilitate traffic movement and anchorage, to avoid disputes as to jurisdiction and to take necessary action to render assistance in emergencies. This authority may be redelegated.

[CGD 78–151, 49 FR 18301, Apr. 30, 1984; 49 FR 26722, June 29, 1984, as amended by CGD 85–060, 51 FR 17016, May 8, 1986; CGD 93–024, 58 FR 59365, Nov. 9, 1993]

§ 162.132 Connecting waters from Lake Huron to Lake Erie; communications rules.

(a) *Radio listening watch*. The master of each vessel required to comply with this section shall continuously monitor:

(1) Channel 11 (156.55 mhz) between Lake Huron Cut Lighted Buoy 11 and Lake St. Clair Light; and

(2) Channel 12 (156.60 mhz) between Lake St. Clair Light and Detroit River Light.

(b) *Radiotelephone equipment*. Reports required by this section shall be made by the master using a radiotelephone capable of operation on a vessel's navigation bridge, or in the case of a dredge, from its main control station.

(c) *English language*. Reports required by this section shall be made in the English language.

(d) *Traffic reports*. (1) Reports required by this section shall be made to SARNIA TRAFFIC on the frequency

designated for the radio listening watch in paragraph (a) of this section.

(2) Reports shall include the name of the vessel, location, intended course of action, and ETA at next reporting point.

(e) *Permanent reporting points.* The master of each vessel to which this section applies shall report as required by paragraph (d) of this section at the location indicated in Table I.

TABLE I

Downbound vessels	Reporting points	Upbound vessels
Report	30 Minutes North of Lake Huron Cut.	
	Lighted Horn Buoy "11"	
Report	Lake Huron Cut Light "7"	
	Lake Huron Cut Lighted Buoy "1".	Report.
Report	St. Clair/Black River Junction Light.	Report.
	Stag Island Upper Light	Report.
Report	Marine City Salt Dock Light	Report.
Report	Grande Pointe Light "23"	
	St. Clair Flats Canal Light "2"	Report.
Report	Lake St. Clair Light	Report.
Report	Belle Isle Light	
Report	Grassy Island Light	Report.
Report	Detroit River Light	Report.

(f) *Additional traffic reports.*

(1) A report shall be made upon leaving any dock, mooring, or anchorage, in the Detroit River, Lake St. Clair, and the St. Clair River except for—

(i) Ferries on regular runs; and

(ii) Vessels in the River Rouge.

(2) A report shall be made before maneuvering to come about.

(3) A report shall be made—

(i) 20 minutes before entering or departing the River Rouge; and

(ii) Immediately before entering or departing the River Rouge.

(g) *Report of impairment or other hazard.* The master of a vessel shall report to SARNIA TRAFFIC as soon as possible:

(1) Any condition on the vessel that may impair its navigation, including but not limited to: fire, defective steering equipment, or defective propulsion machinery.

(2) Any tow that the towing vessel is unable to control, or can control only with difficulty.

(h) *Exemptions.* Compliance with this section is not required when a vessel's radiotelphone equipment has failed.

[CGD 78–151, 49 FR 18301, Apr. 30, 1984; 49 FR 26722, June 29, 1984, as amended by CGD 85–060, 51 FR 17016, May 8, 1986; CGD 85-060, 51 FR 37274, Oct. 21, 1986]

§ 162.134 Connecting waters from Lake Huron to Lake Erie; traffic rules.

(a) *Detroit River.* The following traffic rules apply in the Detroit River:

(1) The West Outer Channel is restricted to downbound vessels.

(2) The Livingston Channel, west of Bois Blanc Island, is restricted to downbound vessels.

NOTE: The Amherstburg Channel, in Canadian waters east of Bois Blanc Island, is normally restricted to upbound vessels. No vessel may proceed downbound in the Amherstburg Channel without authorization from the Regional Director General.

(3) Between Fighting Island Channel South Light and Bar Point Pier Light 29D, no vessels shall meet or overtake in such a manner that more than two vessels would be abreast at any time.

(4) Between the west end of Belle Isle and Peche Island Light, vessels may only overtake vessels engaged in towing.

(b) *River Rouge.* In the River Rouge, no vessel shall overtake another vessel.

(c) *St. Clair River.* The following traffic rules apply in the St. Clair River:

(1) Between St. Clair Flats Canal Light 2 and Russell Island Light 33, vessels may only overtake vessels engaged in towing.

(2) Between Lake Huron Cut Lighted Buoy 1 and Port Huron Traffic Lighted Buoy there is a zone of alternating one way traffic. Masters shall coordinate their movements in accordance with the following rules;

(i) Vessels shall not overtake.

(ii) Vessels shall not come about.

(iii) Vessels shall not meet.

(iv) Downbound vessels which have passed Lake Huron Cut Lighted Buoy 7 have the right of way over upbound vessels which have not reached the Port Huron Traffic Lighted Buoy. Upbound vessels awaiting transit of downbound vessels will maintain position south of the Port Huron Traffic Lighted Buoy.

(v) Vessels transiting the zone shall coordinate passage by using communication procedures in § 162.132.

(vi) Transiting vessels shall have the right of way over moored vessels getting underway within the zone.

(d) In the waters described in § 162.130(a), the District Commander or Captain of the Port may establish temporary traffic rules for reasons which include but are not limited to: channel obstructions, winter navigation, unusual weather conditions, or unusual water levels.

(e) The requirements of this section do not apply to public vessels of the U.S. or Canada engaged in icebreaking or servicing aids to navigation or to vessels engaged in river and harbor improvement work.

(f) The prohibitions in this section on overtaking in certain areas do not apply to vessels operating in the nondisplacement mode. In this section, ''nondisplacement mode'' means a mode of operation in which the vessel is supported by hydrodynamic forces, rather than displacement of its weight in the water, to an extent such that the wake which would otherwise be generated by the vessel is significantly reduced.

[CGD 78–151, 49 FR 18302, Apr. 30, 1984; 49 FR 26722, June 29, 1984, as amended by CGD 09–95–002, 60 FR 35701, July 11, 1995]

§ 162.136 Connecting waters from Lake Huron to Lake Erie; anchorage grounds.

(a) In the Detroit River, vessels shall be anchored so as not to swing into the channel or across steering courses.

NOTE: There is an authorized anchorage in Canadian waters just above Fighting Island and an authorized anchorage in U.S. waters south of Belle Isle (33 CFR 110.206).

(b) In the St. Clair River, vessels shall be anchored so as not to swing into the channel or across steering courses.

[CGD 78–151, 49 FR 18302, Apr. 30, 1984, as amended by CGD 85–060, 51 FR 17016, May 8, 1986]

§ 162.138 Connecting waters from Lake Huron to Lake Erie; speed rules.

(a) *Maximum speed limit for vessels in normal displacement mode.* (1) Except when required for the safety of the vessel or any other vessel, vessels of 20 meters or more in length operating in normal displacement mode shall proceed at a speed not greater than—

(i) 12 statute miles per hour (10.4 knots) between Fort Gratiot Light and St. Clair Flats Canal Light 2;

(ii) 12 statute miles per hour (10.4 knots) between Peche Island Light and Detroit River Light; and

(iii) 4 statute miles per hour (3.5 knots) in the River Rouge.

(2) The maximum speed limit is 5.8 statute miles per hour (5 knots) in the navigable channel south of Peche Island (under Canadian jurisdiction).

(b) *Maximum speed limit for vessels operating in nondisplacement mode.* (1) Except when required for the safety of the vessel or any other vessel, vessels 20 meters or more in length but under 100 gross tons operating in the nondisplacement mode and meeting the requirements set out in paragraph (c) of this section, may operate at a speed not exceeding 40 miles per hour (34.8 knots)—

(i) During daylight hours (sunrise to sunset);

(ii) When conditions otherwise safely allow; and

(iii) When approval has been granted by the Coast Guard Captain of the Port, Detroit or Commander of the Ninth Coast Guard District prior to each transit of the area.

(2) In this section, ''nondisplacement mode'' means a mode of operation in which the vessel is supported by hydrodynamic forces, rather than displacement of its weight in the water, to an extent such that the wake which would otherwise be generated by the vessel is significantly reduced.

(c) *Unsafe vessels.* The Captain of the Port or the District Commander may deny approval for operations under paragraph (b) of this section if it appears that the design and operating characteristics of the vessels in question are not safe for the designated waterways, or if it appears that operations under this section have become unsafe for any reason.

(d) *Temporary speed limits.* The District Commander may temporarily establish speed limits or temporarily

amend existing speed limit regulations on the waters described in § 162.130(a).

[CGD 09–95–002, 60 FR 35702, July 11, 1995]

§ 162.140 Connecting waters from Lake Huron to Lake Erie; miscellaneous rules.

(a) *Rules for towing vessels.* (1) A towing vessel may drop or anchor its tows only in accordance with the provisions of § 162.136.

(2) A towing vessel engaged in arranging its tow shall not obstruct the navigation of other vessels.

(b) *Pilots.* In the St. Clair River between Lake Huron Cut Lighted Buoy 1 and Port Huron Traffic Lighted Buoy, vessels shall not take on, discharge, or exchange pilots unless weather conditions would make the maneuver unsafe in the customary pilot area.

[CGD 78–151, 49 FR 18302, Apr. 30, 1984]

§ 162.145 Monroe Harbor, Mich.

(a) In the lake channel, no vessel greater than 40 feet in length may exceed 10 miles per hour.

(b) In the river channel:

(1) No vessel greater than 40 feet in length may exceed 6 miles per hour.

(2) No vessel may use a towline exceeding 200 feet in length.

[CGD 79–151, 46 FR 7960, Jan. 26, 1981]

§ 162.150 Maumee Bay and River, Ohio.

(a) In Maumee Bay (lakeward of Maumee River Lighted Buoy 49(L/L No. 770)), no vessel greater than 100 feet in length may exceed 12 miles per hour.

(b) In Maumee River (inward of Maumee River Lighted Buoy 49(L/L No. 770)):

(1) No vessel greater than 40 feet in length may exceed 6 miles per hour.

(2) No vessel greater than 100 feet in length (including tug and tow combinations) may overtake another vessel.

[CGD 79–151, 46 FR 7960, Jan. 26, 1981]

§ 162.155 Sandusky and Huron Harbors, Ohio.

(a) In Sandusky Harbor, no vessel greater than 40 feet in length may exceed 10 miles per hour.

(b) In Huron Harbor, no vessel greater than 40 feet in length may exceed 6 miles per hour, except in the outer harbor where no vessel greater than 40 feet in length may exceed 10 miles per hour.

NOTE: The Corps of Engineers also has regulations dealing with these areas in 33 CFR Part 207.

[CGD 79–151, 46 FR 7960, Jan. 26, 1981]

§ 162.160 Vermilion, Lorain, Cleveland, Fairport, Ashtabula, and Conneaut Harbors, Ohio.

(a) In Vermilion Harbor, no vessel may exceed 6 miles per hour.

(b) In Lorain, Cleveland, Fairport, Ashtabula, and Conneaut Harbors, no vessel may exceed 6 miles per hour, except in the outer harbors, where no vessel may exceed 10 miles per hour.

NOTE: The Corps of Engineers also has regulations dealing with these areas in 33 CFR Part 207.

[CGD 79–151, 46 FR 7960, Jan. 26, 1981]

§ 162.165 Buffalo and Rochester Harbors, New York.

In Buffalo and Rochester Harbors, no vessel may exceed 6 miles per hour, except in the outer harbors where no vessel may exceed 10 miles per hour.

NOTE: The Corps of Engineers also has regulations dealing with these areas in 33 CFR Part 207.

[CGD 79–151, 46 FR 7960, Jan. 26, 1981]

§ 162.175 Black Rock Canal and Lock at Buffalo, New York.

In the Black Rock Canal and Lock, no vessel may exceed 6 miles per hour.

NOTE: The Corps of Engineers also has regulations dealing with these areas in 33 CFR Part 207.

[CGD 79–151, 46 FR 7960, Jan. 26, 1981]

§ 162.195 Santa Monica Bay, Calif.; restricted area.

(a) *The area.* The waters of the Pacific Ocean, Santa Monica Bay, in an area extending seaward from the shoreline a distance of about 5 nautical miles (normal to the shoreline) and basically outlined as follows:

Station	Latitude North	Longitude West
A	33°54′ 59″	118°25′ 41″
B	33°54′ 59″	118°28′ 00″
C	33°53′ 59.5″	118°31′ 37″
D	33°56′ 19.5″	118°34′ 05″
E	33°56′ 25″	118°26′ 29″

(b) *The regulations.* (1) Vessels shall not anchor within the area at any time without permission.

(2) Dredging, dragging, seining, or other fishing operations which might foul underwater installations within the area are prohibited.

(3) All vessels entering the area, other than vessels operated by or for the United States, the State of California, the county of Los Angeles, or the city of Los Angeles, shall proceed across the area by the most direct route and without unnecessary delay. The area will be open and unrestricted to small recreational craft for recreational activities at all times.

(4) The placing of bouys, markers, or other devices requiring anchors will not be permitted.

(5) The city of Los Angeles will maintain a patrol of the area as needed.

§ 162.200 Marina del Rey, Calif.; restricted area.

(a) *The area.* That portion of the Pacific Ocean lying shoreward of the offshore breakwater and the most seaward 1,000 feet of the entrance channel between the north and south jetties, and basically outlined as follows:

Station	Latitude	Longitude
A	33°57′ 46.0″	118°27′ 39.5″
B	33°57′ 52.3″	118°27′ 43.6″
C	33°57′ 48.6″	118°27′ 48.8″
D	33°57′ 29.8″	118°27′ 34.7″
E	33°57′ 30.9″	118°27′ 29.1″
F	33°57′ 37.4″	118°27′ 33.8″
G	33°57′ 42.4″	118°27′ 23.0″
H	33°57′ 50.6″	118°27′ 28.3″

(b) *The regulations.* (1) Vessels shall not anchor within the area at any time without permission except in an emergency.

(2) Dredging, dragging, seining, or other fishing operations which might foul underwater installations within the area are prohibited.

NOTE: The Corps of Engineers also has regulations dealing with this section in 33 CFR Part 207.

§ 162.205 Suisun Bay, San Joaquin River, Sacramento River, and connecting waters, CA.

(a) *San Joaquin River Deep Water Channel between Suisun Bay and the easterly end of the channel at Stockton; use, administration and navigation*—(1) *Maximum speed.* The maximum speed for all ocean-going craft shall not exceed 10 miles per hour above the lower end of New York Slough, seven miles per hour above Criminal Point, or five miles per hour while passing any wharf, dock, or moored craft. As used in this paragraph, the speed of a vessel when navigating with the current shall be its rate of movement in excess of the velocity of the current.

(2) *Passing.* All craft passing other boats, barges, scows, etc., in motion, moored or anchored, shall slow down and take every necessary precaution to avoid damage.

(3) *Right of way.* (i) United States dredges, tugs, launches, derrick boats, and similar plant of contractors executing river and harbor improvement work for the United States, and displaying the signals prescribed by the regulations contained in Part 80 of this chapter shall have the right of way and other craft shall exercise special caution to avoid interference with the work on which the plant is engaged. Dredges, whether Federal or contractors' plant, working the channel must however, take special care to give ocean-going vessels sufficient room for passing, and must lift both spuds and the ladder, and pull clear, if an adequate width of clear channelway cannot otherwise be provided. Ocean-going vessels may show at the masthead a black ball not more than 20 inches in diameter as a signal to the dredge, and may also blow five long blasts of the whistle when within reasonable hearing distance of the dredge, such signal to be followed at the proper time by the passing signal described in the local pilot rules. The dredge shall promptly acknowledge both signals in the usual manner.

(ii) Light-draft vessels when meeting or being overtaken by ocean-going vessels, shall give the right of way to such vessels by making use of the shallower portions of the waterway.

(iii) Rafts and tows must promptly give the channel side demanded upon proper signal by a vessel, and must be handled in such a manner as not to obstruct or interfere with the free use of the waterway by other craft.

(4) *Collisions.* (i) Ocean-going vessels in collision in the channel or turning

basin must, if still afloat and in a condition making anchorage necessary, be immediately removed to an approved anchorage ground, or if in such condition that beaching is necessary, they shall be temporarily beached on the northwest side of Mandeville Island or in the Old River.

(ii) Light-draft vessels suffering collision shall be disposed of as directed by the District Commander or his authorized representative.

(5) *Wrecks.* In no case following accidents of fire or collision will a vessel be allowed to remain either anchored or grounded in the channel, or beached at any place where it endangers other vessels, while settlement is pending with the underwriters.

(6) *Other laws and regulations.* In all other respects, the existing Federal laws and rules and regulations affecting navigable waters of the United States will govern in this channel.

(b) *Sacramento Deep Water Ship Channel between Suisun Bay and easterly end of Turning Basin at West Sacramento; use, administration, and navigation*—(1) *Maximum speed for all ocean going craft*—(i) *Between Tolands Landing (Mile 6.2) and Rio Vista Bridge.* When going against a current of two knots or more, the maximum speed over the bottom shall not exceed 8 knots. When going with the current, in slack water, or against a current of two knots or less, the maximum speed through the water shall not exceed 10 knots.

(ii) *Between Rio Vista Bridge and Port of Sacramento.* When going against a current of two knots or more, the maximum speed over the bottom shall not exceed 5 knots. When going with the current, in slack water, or against a current of two knots or less, the maximum speed through the water shall not exceed 7 knots.

(iii) *Speed past docks or moored craft.* Within 550 feet of the centerline of the channel the speed shall be the minimum required to maintain steerageway; wind, tide, current, etc., being taken into consideration.

(iv) *Passing.* All craft passing other boats, barges, scows, etc., underway, moored or anchored, shall take every necessary precaution to avoid damage.

(v) *Speed, high-water precautions.* When passing another vessel (underway, anchored, or tied up); a wharf or other structure; work under construction; plant engaged in river and harbor improvement; levees withstanding flood waters; buildings partially or wholly submerged by high water; or any other structure liable to damage by collision, suction or wave action; vessels shall give as much leeway as circumstances permit and reduce their speed sufficiently to preclude causing damage to the vessel or structure being passed. As deemed necessary for public safety during high river stages, floods, or other emergencies, the District Commander may prescribe, by navigation bulletins or other means, the limiting speed in knots or temporarily close the waterway or any reach of it to traffic. Since this subparagraph pertains directly to the manner in which vessels are operated, masters of vessels shall be held responsible for strict observance and full compliance herewith.

(2) *Right of way.* (i) Dredges, tugs, launches, derrick boats and other similar equipment, executing river and harbor improvement work for the United States, and displaying the signals prescribed by the regulations contained in Part 80, of this Chapter, shall have the right-of-way and other craft shall exercise special caution to avoid interference with the work on which the plant is engaged. Dredges, whether Federal or contractor's plant, working the channel must however, take special care to give ocean-going vessels sufficient room for passing, and must lift both spuds and the ladder, and pull clear, if an adequate width of clear channelway cannot otherwise be provided.

(ii) Vessels intending to pass dredges or other types of floating plant working in navigable channels, when within a reasonable distance therefrom and not in any case over a mile, shall indicate such intention by one long blast of the whistle, and shall be directed to the proper side for passage by the sounding, by the dredge or other floating plant, of the signal prescribed in the inland pilot rules for vessels underway and approaching each other from opposite directions, which shall be answered in the usual manner by the approaching vessel. If the channel is not clear, the floating plant shall sound

the alarm or danger signal and the approaching vessel shall slow down or stop and await further signal from the plant.

(iii) When the pipeline from a dredge crosses the channel in such a way that an approaching vessel cannot pass safely around the pipeline or dredge, there shall be sounded immediately from the dredge the alarm or danger signal and the approaching vessel shall slow down or stop and await further signal from the dredge. The pipeline shall then be opened and the channel cleared as soon as practicable; when the channel is clear for passage the dredge shall so indicate by sounding the usual passing signal as prescribed in paragraph (c)(2)(ii) of this section. The approaching vessel shall answer with a corresponding signal and pass promptly.

(iv) When any pipeline or swinging dredge shall have given an approaching vessel or tow the signal that the channel is clear, the dredge shall straighten out within the cut for the passage of the vessel or tow.

(v) Shallow draft vessels when meeting or being overtaken by ocean-going vessels, shall give the right-of-way to such vessels by making use of the shallower portions of the waterway, wherever possible.

(vi) Tows should promptly give the channel side requested by proper signal from a vessel, and should be handled in such a manner as not to obstruct or interfere with the free use of the waterway by other craft.

(3) *Obstruction of traffic.* (i) Except as provided in paragraph (c)(2) of this section no person shall willfully or carelessly obstruct the free navigation of the waterway, or delay any vessel having the right to use the waterway.

(ii) No vessel shall anchor within the channel except in distress or under stress of weather. Any vessel so anchored shall be moved as quickly as possible to such anchorage as will leave the channel clear for the passage of vessels.

(iii) Motorboats, sailboats, rowboats, and other small craft shall not anchor or drift in the regular ship channel except under stress of weather or in case of breakdown. Such craft shall be so operated that they will not interfere with or endanger the movement of commercial or public vessels.

(4) *Collisions.* (i) Ocean-going vessels in collision in the channel or turning basin, must if still afloat and in a condition making anchorage necessary, be immediately removed to an approved anchorage ground, or if in such condition that beaching is necessary, they shall be temporarily beached on the southwest side of Ryer Island from Mile 15.0 to Mile 16.3 or in the Harbor and Turning Basin at West Sacramento.

(ii) Light-draft vessels suffering collision shall be disposed of as directed by the District Commander or his authorized representative.

(5) *Marine accidents.* Masters, mates, pilots, owners, or other persons using the waterway to which this paragraph applies shall notify the District Commander and in the case of undocumented vessels, the State Division of Small Craft Harbors also, by the most expeditious means available of all marine accidents, such as fire, collision, sinking or stranding, where there is possible obstruction of the channel or interference with navigation or where damage to Government property is involved, furnishing a clear statement as to the name, address, and ownership of the vessel or vessels involved, the time and place, and the action taken. In all cases, the owner of the sunken vessel shall take immediate steps to mark the wreck properly.

(6) *Other laws and regulations.* In all other respects, existing Federal laws and rules and regulations affecting navigable waters of the United States will govern in this channel.

(c) Sacramento River, Decker Island Restricted Anchorage for Vessels of the U.S. Government— (1) The anchorage ground. An elongated area in the Sacramento River bounded on the west by the shore of Decker Island and the following lines: Beginning on the shore at Decker Island North End Light at latitude 38°06′16″ N., longitude 121°42′32.5″ W.; thence easterly to latitude 38°06′15″ N., longitude 121°42′27″ W.; thence southerly to latitude 38°05′22″ N., longitude 121°42′30″ W.; thence southwesterly to latitude 38°05′08″ N., longitude 121°42′40″ W.; thence west southwesterly to latitude 38°05′02″ N., longitude

121°42′50″ W.; thence northwesterly to the shore of Decker Island at latitude 38°05′04″ N., longitude 121°42′52.5″ W.

(2) Special Regulation. No Vessel or other craft except those owned by or operating under contract with the United States may navigate or anchor within 50 feet of any moored Government vessel in the area. Commercial and pleasure craft shall not moor to buoys or chains of Government vessels, nor may they, while moored or underway, obstruct the passage of Government or other vessels through the area.

NOTE: The Corps of Engineers also has regulations dealing with this section in 33 CFR Part 207.

[CGD 75–082, 42 FR 51759, Sept. 29, 1977, as amended by CGD12 84–07, 51 FR 12318, Apr. 10, 1986; CGD11–94–007, 60 FR 16796, Apr. 3, 1995; USCG–1998–3799, 63 FR 35532, June 30, 1998]

§ 162.210 Lake Tahoe, Calif.; restricted areas along south shore.

(a) *The areas*—(1) *Baldwin Beach, under the control of the Forest Service, Department of Agriculture.* The waters of Lake Tahoe shoreward of a line described as follows: Beginning at the intersection of the high waterline with the west boundary line of Lot 2, Section 26, Township 13 North (Mount Diablo Base Line), Range 17 East (Mount Diablo Meridian); thence north 300 feet; thence southeasterly about 2,850 feet to the east line of Section 26 at a point 300 feet north of the high waterline; thence northeasterly 1,740 feet to a point 300 feet north of the high waterline; thence southeasterly about 1,810 feet to the projected east line of the former Baldwin property at a point 300 feet north of the high waterline; and thence south 300 feet to the high waterline.

(2) *Camp Richardson, under the control of the Forest Service, Department of Agriculture.* The waters of Lake Tahoe shoreward of a line described as follows: Beginning at the southeasterly corner of sec. 25, T. 13 N., R. 17 E., Mount Diablo Base and Meridian; thence north 410 feet along the east line of sec. 25; thence northwesterly 95 feet to the high waterline which is the true point of beginning; thence north 130 feet; thence southeasterly 565 feet; and thence south 130 feet to the high waterline.

(3) *Pope Beach, under the control of the Forest Service, Department of Agriculture.* The waters of Lake Tahoe shoreward of a line described as follows: Beginning at the intersection of the high waterline with the west line of the former Pope property, about 750 feet westerly of the west boundary line of Lot 2, Section 6, Township 12 North (Mount Diablo Base Line), Range 18 East (Mount Diablo Meridian); thence north 300 feet; thence southeasterly 4,200 feet to a point 300 feet north of the high waterline; and thence south 300 feet to the high waterline.

(4) *El Dorado County Beach.* The waters of Lake Tahoe shoreward of a line described as follows: Beginning at the intersection of the high waterline with the west boundary line of Lot 1, Section 32, Township 13 North (Mount Diablo Base Line), Range 18 East (Mount Diablo Meridian); thence north 500 feet; thence northeasterly about 1,350 feet to the projected east line of Lot 1 at a point 500 feet north of the high waterline; and thence south 500 feet to the high waterline.

(b) *The regulations.* No sail or machine-propelled watercraft, except vessels owned or controlled by the U.S. Coast Guard, shall navigate or anchor in the restricted area.

§ 162.215 Lake Tahoe, Nev.; restricted area adjacent to Nevada Beach.

(a) *The restricted area.* The waters of Lake Tahoe shoreward of a line described as follows: Beginning at the intersection of the high waterline with a line projected in a general southerly direction 200 feet from a point lying 310 feet west of section corner common to section 15, 16, 21, and 22, Township 13 North (Mount Diablo Base Line), Range 18 East (Mount Diablo Meridian); thence 300 feet lakeward at right angles to the high waterline; thence southeasterly approximately 2,170 feet to the projected south boundary line of the Forest Service property at a point 300 feet west of the high waterline; and thence east 300 feet to the high water line.

(b) *The regulations.* No sail or motor propelled watercraft, except vessels owned or controlled by the United States Government and vessels duly authorized by the United States Coast

Guard, shall navigate or anchor in the restricted area.

§ 162.220 Hoover Dam, Lake Mead, and Lake Mohave (Colorado River), Ariz.-Nev.

(a) *Lake Mead and Lake Mohave; restricted areas*—(1) *The areas.* That portion of Lake Mead extending 700 feet upstream of the axis of Hoover Dam and that portion of Lake Mohave (Colorado River) extending 4,500 feet downstream of the axis of Hoover Dam.

(2) *The regulations.* The restricted areas shall be closed to navigation and other use by the general public. Only vessels owned by or controlled by the U.S. Government and the States of Arizona and Nevada shall navigate or anchor in the restricted areas: *Provided, however,* The Regional Director, Region 3, U.S. Bureau of Reclamation, Boulder City, Nev., may authorize, by written permit, individuals or groups to navigate or anchor in the restricted areas when it is deemed in the public interest. Copies of said permits shall be furnished the enforcing agencies.

(b) *Lake Mead; speed regulation.* In that portion of Lake Mead extending 300 feet upstream of the restricted area described in paragraph (a) of this section, a maximum speed of 5 miles per hour shall not be exceeded.

(c) *Supervision.* The regulations in this section shall be supervised by the District Commander, Eleventh Coast Guard District.

§ 162.225 Columbia and Willamette Rivers, Washington and Oregon; administration and navigation.

(a) *Supervision.* The District Commander, Thirteenth Coast Guard District, has certain administrative supervision over the Columbia and Willamette Rivers, and is charged with the enforcement under his direction of emergency regulations to govern navigation of these streams.

(b) *Speed.* During very high water stages (usually 25 feet or more on the Vancouver, Washington, gage) when lives, floating plant or major shore installations are endangered, the District Commander shall have authority to prescribe such temporary speed regulations as he may deem necessary for the public safety. During critical periods of freshets under 25 feet on the Vancouver, Washington, gage when construction is in progress, rehabilitation, or other unusual emergency makes a major shore installation susceptible to loss or major damage from wave action, the District Commander shall have authority to prescribe for a particular limited reach of the river as appropriate such temporary speed regulations as he may deem necessary to protect the integrity of such structure. All speed regulations prescribed by the District Commander shall be obeyed for the duration of the emergency and shall be terminated at the earliest practicable time that improved stream conditions permit.

§ 162.230 Columbia River, Wash.

(a) *Grand Coulee Dam discharge channel; restricted area*—(1) *The area.* That portion of the Columbia River between Grand Coulee Dam (situated at river mile 596.6) and river mile 593.7.

(2) *The regulations.* (i) No vessel shall enter or navigate within the area without permission from the enforcing agency.

(ii) The regulation in this section shall be enforced by the Chief, Power Field Division, Columbia Basin Project, U.S. Department of the Interior, Coulee Dam, Washington.

§ 162.235 Puget Sound Area, Wash.

(a) *Waterway connecting Port Townsend and Oak Bay; use, administration, and navigation*—(1) *Works to which regulations apply.* The ''canal grounds'' when used in this paragraph shall mean that area between the south end of the jetties in Oak Bay and the northerly end of the dredge channel approximately 400 yards northwest of Port Townsend Canal Light. The ''canal'' is the water lying between these limits and the banks containing the same.

(2) *Speed.* The speed limit within the canal grounds shall not exceed five miles per hour.

(3) *Signals.* All boats desiring to use the canal shall give one long and one short whistle. Southbound boats shall sound the signal within 600 yards of Port Townsend Canal Light. Northbound boats shall sound this signal at least 500 feet south from the end of the

jetties in Oak bay. If no other boat answers the signal the first boat shall have the right of way through the canal. Any approaching boat that is in the canal shall answer by giving the same signal and the first boat shall not enter the canal until the second boat shall have passed through the canal. In the case of boats going in the same direction the boat which is in the canal shall not answer the signal of the boat desiring to enter.

(4) *Passing.* Steamers shall not under any circumstances attempt to pass each other in the canal, either when going in the same or opposite directions.

(5) *Anchoring.* No steamers or boats shall anchor or tie up within the canal grounds unless they are well over on the tide flats to the west of the dredged channel, and off the right of way belonging to the United States.

(6) *Tows.* No tow shall enter or pass through the canal with a towline more than 200 in length.

(7) *Delaying traffic.* No person shall cause or permit any vessel or boat of which he is in charge, or on which he is employed, to obstruct the canal in any way or delay in passing through it.

(b) *West Waterway, Seattle Harbor; navigation.* (1) The movement of vessels of 250 gross tons or over and all vessels with tows of any kind through the narrow section of West Waterway between the bend at Fisher's Flour Mill dock and the bend at the junction of East Waterway with Duwamish Waterway, and through the draws of the City of Seattle and Northern Pacific Railway Company bridges crossing this narrow section, shall be governed by red and green traffic signal lights mounted on the north and south sides of the west tower of the City Light power crossing at West Spokane Street.

(2) Two green lights, one vertically above the other, displayed ahead of a vessel, shall indicate that the waterway is clear. Two red lights, one vertically above the other, displayed ahead of a vessel, shall indicate that the waterway is not clear.

(3) A vessel approaching the narrow section and drawbridges from either end of the waterway shall give one long blast of a whistle and shall not enter the narrow section until green lights are displayed.

(4) One vessel may follow another vessel in either direction, but the channel shall not be kept open in the same direction for an unreasonable time if a vessel is waiting at the other end.

(5) Tugs, launches, and small craft shall keep close to one side of the channel when vessels or boats with tows are passing.

(6) All craft shall proceed with caution. The display of a green light is not a guarantee that the channel is clear of traffic, and neither the United States nor the City of Seattle will be responsible for any damage to vessels or other property which may be chargeable to mistakes in the operation of the signal lights or to their failure to operate.

NOTE: The Corps of Engineers also has regulations dealing with this section in 33 CFR Part 207.

§ 162.240 Tongass Narrows, Alaska; navigation.

(a) *Definitions.* The term ''Tongass Narrows'' includes the body of water lying between Revillagigedo Channel and Guard Island in Clarence Strait.

(b) No vessel, except for floatplanes during landings and take-offs and noncommercial, open skiffs of less than 20 feet in length, shall exceed a speed of seven knots in the region of Tongass Narrows bounded to the north by Tongass Narrows Buoy 9 and to the south by Tongass Narrows East Channel Regulatory Buoy at position 55°19′22.0″ N 131°36′40.5″ W and Tongass Narrows West Channel Regulatory Buoy at position 55°19′28.5″ N 131°39′09.7″ W, respectively.

(c) No vessel shall while moored or at anchor, or by slow passage or otherwise while underway, unreasonably obstruct the free passage and progress of other vessels.

(d) No vessel shall moor or anchor to any structure of the United States other than mooring piers, wharves, and floats without the consent of the Commanding Officer, Marine Safety Office, Juneau, Alaska.

[CGD 75–082, 42 FR 51759, Sept. 29, 1977, as amended by CGD 77–217, 43 FR 60458, Dec. 28, 1978; CGD 82–039, 47 FR 27266, June 24, 1982; USCG–1998–3799, 63 FR 35532, June 30, 1998; CGD17–99–002, 64 FR 29557, June 2, 1999, 64 FR 32103, June 15, 1999]

§ 162.245 Kenai River, Kenai, Alaska; use, administration, and navigation.

(a) *The area.* The main channel area of the river, having a width of 150 feet, beginning at a point directly offshore from the centerline of the city dock and extending about 2,200 feet upstream to a point 200 feet upstream from the Inlet Co. dock.

(b) *The regulations.* (1) Vessels may navigate, anchor, or moor within the area until such time as notification is received or observation is made of intended passage to or from the docking areas.

(2) Notice of anticipated passage of towboats and barges shall be indicated 24 hours in advance by display of a red flag by the Inlet Co. from its warehouse.

§ 162.250 Port Alexander, Alaska; speed of vessels.

(a) *Definition.* The term ''Port Alexander'' includes the entire inlet from its head to its entrance from Chatham Strait.

(b) *Speed.* The speed of all vessels of 5 tons or more gross, ships register, shall not exceed 3 miles per hour either in entering, leaving, or navigating within Port Alexander, Alaska.

[CGD 75–082, 42 FR 51759, Sept. 29, 1977, as amended by CGD 82–039, 47 FR 27266, June 24, 1982]

§ 162.255 Wrangell Narrows, Alaska; use, administration, and navigation.

(a) *Definitions.* (1) The term ''Wrangell Narrows'' includes the entire body of water between Wrangell Narrows North Entrance Lighted Bell Buoy 63 and Midway Rock Light.

(2) The term ''raft section'' refers to a standard raft of logs or piling securely fastened together for long towing in Alaska inland waters in the manner customary with the local logging interests, i.e., with booms, swifters, and tail sticks. It normally contains 30,000 to 70,000 feet board measure of logs or piling and has a width of 45 to 60 feet and a length of 75 to 100 feet.

(b) *Speed restrictions.* No vessel shall exceed a speed of seven (7) knots in the vicinity of Petersburg, between Wrangell Narrows Channel Light 58 and Wrangell Narrows Lighted Buoy 60.

(c) *Tow channel.* The following route shall be taken by all tows passing through Wrangell Narrows when the towboat has a draft of 9 feet or less (northbound, read down; southbound, read up):

East of Battery Islets:
- East of Tow Channel Buoy 1 TC.
- East of Tow Channel Buoy 3 TC.
- West of Tow Channel Buoy 4 TC.

East of Colorado Reef:
- East of Wrangell Narrows Channel Light 21.
- West of Wrangell Narrows Channel Lighted Buoy 25.
- East of Tow Channel Buoy 5 TC.
- East of Tow Channel Buoy 7 TC.

West of Petersburg:
- East of Wrangell Narrows Channel Light 54 Fr.
- East of Wrangell Narrows Channel Light 56 Qk FR.
- East of Wrangell Narrows Channel Light 58 Fr., thence proceeding to west side of channel and leaving Wrangell Narrows by making passage between Wrangell Narrows Channel Daybeacon 61 and Wrangell Narrows North Entrance Lighted Bell Buoy 63 F.

(d) *Size of tows.* The maximum tows permitted shall be one pile driver, or three units of other towable equipment or seven raft sections.

(e) *Arrangement of tows.* (1) No towline or aggregate of towlines between towboat and separated pieces shall exceed 150 feet in length.

(2) Raft and barge tows of more than one unit shall not exceed 65 feet in width overall. Single barge tows shall not exceed 100 feet in width overall.

(3) Tows other than rafts shall be taken alongside the towboat whenever possible.

(f) *Anchorage.* Vessels may anchor in the anchorage basin in the vicinity of Anchor Point. No craft or tow shall be anchored in Wrangell Narrows in either the main ship channel or the towing channel, nor shall any craft or tow be anchored so that it can swing into either of these channels.

(g) *Disabled craft.* Disabled craft in a condition of absolute necessity are exempt from the regulations in this section.

[CGD 75–082, 42 FR 51759, Sept. 29, 1977, as amended by CGD 82–039, 47 FR 27266, June 24, 1982; CGD 94–026, 60 FR 63624, Dec. 12, 1995]

§ 162.260 Channel leading to San Juan Harbor, P.R.; use, administration, and navigation.

(a) Steamers passing dredge engaged in improving the channel shall not have a speed greater than 4 miles an hour, and the propelling machinery shall be stopped when crossing the lines to the dredge anchors.

(b) Vessels using the channel shall pass the dredge on the side designated from the dredge by the signals prescribed in paragraph (c) of this section.

(c) Dredge shall display the red flag by day and four white lights hung in a vertical line by night to indicate the passing side.

(d) Vessels shall not anchor on the ranges of stakes or other marks placed for the guidance of the dredge, nor in such a manner as to obstruct the channel for passing vessels.

(e) Vessels shall not run over or disturb stake, lanterns, or other marks placed for the guidance of the dredge.

(f) Dredges working in the prosecution of the work shall not obstruct the channel unnecessarily.

(g) The dredge will slack lines running across the channel from the dredge on the passing side, for passing vessels, when notified by signal, with whistle or horn.

(h) The position of anchors of the dredge shall be marked by buoys plainly visible to passing vessels.

§ 162.270 Restricted areas in vicinity of Maritime Administration Reserve Fleets.

(a) The regulations in this section shall govern the use and navigation of waters in the vicinity of the following National Defense Reserve Fleets of the Maritime Administration, Department of Transportation:

(1) James River Reserve Fleet, Fort Eustis, Virginia.

(2) Beaumont Reserve Fleet, Neches River near Beaumont, Texas.

(3) Suisun Bay Reserve Fleet near Benicia, California.

(b) No vessels or other watercraft, except those owned or controlled by the United States Government, shall cruise or anchor between Reserve Fleet units within 500 feet of the end vessels in each Reserve Fleet unit, or within 500 feet of the extreme units of the fleets, unless specific permission of do so has first been granted in each case by the enforcing agency.

(c) The regulations in this section shall be enforced by the respective Fleet Superintendents and such agencies as they may designate.

[CGD 75–082, 42 FR 51759, Sept. 29, 1977, as amended by CGD 86–053, 51 FR 43742, Dec. 4, 1986]

PART 163—TOWING OF BARGES

Sec.

163.01 Application.
163.05 Tows of seagoing barges within inland waters.
163.20 Bunching of tows.

AUTHORITY: 33 U.S.C. 152, 2071; 49 CFR 1.46(n).

§ 163.01 Application.

(a) The regulations in this part apply to vessels navigating the harbors, rivers, and inland waters of the United States, except the Great Lakes and their connecting and tributary waters as far east as Montreal, the Red River of the North, the Mississippi River and its tributaries above Huey P. Long Bridge, and that part of the Atchafalaya River above its junction with the Plaquemine-Morgan City alternate waterway.

(b) Seagoing barges and their towing vessels shall be subject to the requirements in this part under the provisions of section 14 of the Act of May 28, 1908, as amended (sec. 14, 35 Stat. 428, as amended; 33 U.S.C. 152). Under the provisions of section 15 of the Act of May 28, 1908, as amended (sec. 15, 35 Stat. 429; 33 U.S.C. 153), the penalty for use of an unlawful towline shall be an action against the master of the towing vessel seeking the suspension or revocation of his license.

[CGFR 60–61, 25 FR 9045, Sept. 21, 1960, as amended by CGFR 66–59, 31 FR 13647, Oct. 22, 1966. Redesignated by CGD 81–017, 46 FR 28154, May 26, 1981]

§ 163.05 Tows of seagoing barges within inland waters.

(a) The tows of seagoing barges when navigating the inland waters of the United States shall be limited in

length to five vessels, including the towing vessel or vessels.

[CGFR 60–61, 25 FR 9045, Sept. 21, 1960. Redesignated by CGD 81–017, 46 FR 28154, May 26, 1981]

§163.20 Bunching of tows.

(a) In all cases where tows can be bunched, it should be done.

(b) Tows navigating in the North and East Rivers of New York must be bunched above a line drawn between Robbins Reef Light and Owls Head, Brooklyn, but the quarantine anchorage and the north entrance to Ambrose Channel shall be avoided in the process of bunching tows.

(c) Tows must be bunched above the mouth of the Schuylkill River, Pa.

[CGFR 60–61, 25 FR 9045, Sept. 21, 1960, as amended by CGFR 64–21, 29 FR 5733, Apr. 30, 1964. Redesignated by CGD 81–017, 46 FR 28154, May 26, 1981]

PART 164—NAVIGATION SAFETY REGULATIONS

Sec.

164.01 Applicability.
164.02 Applicability exception for foreign vessels.
164.03 Incorporation by reference.
164.11 Navigation under way: General.
164.13 Navigation underway: tankers.
164.15 Navigation bridge visibility.
164.19 Requirements for vessels at anchor.
164.25 Tests before entering or getting underway.
164.30 Charts, publications, and equipment: General.
164.33 Charts and publications.
164.35 Equipment: All vessels.
164.37 Equipment: Vessels of 10,000 gross tons or more.
164.38 Automatic radar plotting aids (ARPA).
164.39 Steering gear: Foreign tankers.
164.40 Devices to indicate speed and distance.
164.41 Electronic position fixing devices.
164.42 Rate of turn indicator.
164.43 Automatic Identification System Shipborne Equipment.
164.51 Deviations from rules: Emergency.
164.53 Deviations from rules and reporting: Non-operating equipment.
164.55 Deviations from rules: Continuing operation or period of time.
164.61 Marine casualty reporting and record retention.
164.70 Definitions.
164.72 Navigational–safety equipment, charts or maps, and publications required on towing vessels.
164.74 Towline and terminal gear for towing astern.
164.76 Towline and terminal gear for towing alongside and pushing ahead.
164.78 Navigation under way: Towing vessels.
164.80 Tests and inspections.
164.82 Maintenance, failure, and reporting.

AUTHORITY: 33 U.S.C. 1223, 1231; 46 U.S.C. 2103, 3703; 49 CFR 1.46. Sec. 164.13 also issued under 46 U.S.C. 8502. Sec. 164.61 also issued under 46 U.S.C. 6101.

§164.01 Applicability.

(a) This part (except as specifically limited herein) applies to each self-propelled vessel of 1600 or more gross tons (except foreign vessels described in §164.02) when it is operating in the navigable waters of the United States except the St. Lawrence Seaway.

(b) Sections 164.70 through 164.82 of this part apply to each towing vessel of 12 meters (39.4 feet) or more in length operating in the navigable waters of the United States other than the St. Lawrence Seaway; except that a towing vessel is exempt from the requirements of §164.72 if it is—

(1) Used solely within a limited geographic area, such as a fleeting-area for barges or a commercial facility, and used solely for restricted service, such as making up or breaking up larger tows;

(2) Used solely for assistance towing as defined by 46 CFR 10.103;

(3) Used solely for pollution response; or

(4) Any other vessel exempted by the Captain of the Port (COTP). The COTP, upon written request, may, in writing, exempt a vessel from §164.72 for a specified route if he or she decides that exempting it would not allow its unsafe navigation under anticipated conditions.

[CGD 83–004, 49 FR 43466, Oct. 29, 1984, as amended by CGD 94–020, 61 FR 35072, July 3, 1996]

§164.02 Applicability exception for foreign vessels.

(a) This part (including §§164.38 and 164.39) does not apply to vessels that:

(1) Are not destined for, or departing from, a port or place subject to the jurisdiction of the United States; and

(2) Are in:

(i) Innocent passage through the territorial sea of the United States; or

(ii) Transit through navigable waters of the United States which form a part of an international strait.

[CGD 77–063, 44 FR 66530, Nov. 19, 1979, as amended by CGD 79–148, 45 FR 54039, Aug. 14, 1980]

§ 164.03 Incorporation by reference.

(a) Certain material is incorporated by reference into this part with the approval of the Director of the Federal Register under 5 U.S.C. 552(a) and 1 CFR part 51. To enforce any edition other than that specified in paragraph (b) of this section, the Coast Guard must publish notice of change in the FEDERAL REGISTER and the material must be available to the public. All approved material is on file at the Office of the Federal Register, 800 North Capitol Street, NW., suite 700, Washington, DC, and at the Office of Vessel Traffic Management (G–MOV), Coast Guard Headquarters, 2100 Second Street, SW., Washington, DC 20593–0001 and is available from the sources indicated in paragraph (b) of this section.

(b) The materials approved for incorporation by reference in this part and the sections affected are as follows:

American Petroleum Institute (API), 1220 L Street NW., Washington, DC 20005

API Specification 9A, Specification for Wire Rope, Section 3, Properties and Tests for Wire and Wire Rope, May 28, 1984 ..... 164.74

American Society for Testing and Materials (ASTM), 1916 Race Street, Philadelphia, PA 19103

ASTM D4268–93, Standard Test Method for Testing Fiber Ropes 164.74

Cordage Institute, 350 Lincoln Street, Hingham, MA 02043

CIA–3, Standard Test Methods for Fiber Rope Including Standard Terminations, Revised, June 1980 ..... 164.74

International Maritime Organization (IMO), 4 Albert Embankment, London SE1 7SR, U.K.

IMO Resolution A342(IX), Recommendation on Performance Standards for Automatic Pilots, adopted November 12, 1975 164.13

International Telecommunication Union Radiocommuni- cation Bureau (ITU–R), Place de Nations CH–1211 Geneva 20 Switzerland

(1) ITU–R Recommendation M.821, Optional Expansion of the Digital Selective-Calling System for Use in the Maritime Mobile Service, 1992 ..... 164.43

(2) ITU–R Recommendation M.825, Characteristics of a Transponder System Using Digital Selective-Calling Techniques for Use with Vessel Traffic Services and Ship-to-Ship Identification, 1992 ..... 164.43

Radio Technical Commission for Maritime Services, 655 Fifteenth Street, NW., Suite 300, Washington, DC 20005

(1) RTCM Paper 12–78/DO–100, Minimum Performance Standards, Loran C Receiving Equipment, 1977 ..... 164.41

(2) RTCM Paper 194–93/SC104–STD, RTCM Recommended Standards for Differential NAVSTAR GPS Service, Version 2.1, 1994 ..... 164.43

(3) RTCM Paper 71–95/SC112–STD, RTCM Recommended Standards for Marine Radar Equipment Installed on Ships of Less Than 300 Tons Gross Tonnage, Version 1.1, October 10, 1995 ..... 164.72

(4) RTCM Paper 191–93/SC112–X, RTCM Recommended Standards for Maritime Radar Equipment Installed on Ships of 300 Tons Gross Tonnage and Upwards, Version 1.2, December 20, 1993 ..... 164.72

[CGD 91–203, 58 FR 27632, May 10, 1993, as amended by CGD 83–043, 60 FR 24771, May 10, 1995; CGD 93–022, 60 FR 51734, Oct. 3, 1995; CGD 96–026, 61 FR 33669, June 28, 1996; CGD 94–020, 61 FR 35072, July 3, 1996]

§ 164.11 Navigation under way: General.

The owner, master, or person in charge of each vessel underway shall ensure that:

(a) The wheelhouse is constantly manned by persons who:

(1) Direct and control the movement of the vessel; and

(2) Fix the vessel's position;

(b) Each person performing a duty described in paragraph (a) of this section is competent to perform that duty;

(c) The position of the vessel at each fix is plotted on a chart of the area and

the person directing the movement of the vessel is informed of the vessel's position;

(d) Electronic and other navigational equipment, external fixed aids to navigation, geographic reference points, and hydrographic contours are used when fixing the vessel's position;

(e) Buoys alone are not used to fix the vessel's position;

NOTE: Buoys are aids to navigation placed in approximate positions to alert the mariner to hazards to navigation or to indicate the orientation of a channel. Buoys may not maintain an exact position because strong or varying currents, heavy seas, ice, and collisions with vessels can move or sink them or set them adrift. Although buoys may corroborate a position fixed by other means, buoys cannot be used to fix a position: however, if no other aids are available, buoys alone may be used to establish an estimated position.

(f) The danger of each closing visual or each closing radar contact is evaluated and the person directing the movement of the vessel knows the evaluation;

(g) Rudder orders are executed as given;

(h) Engine speed and direction orders are executed as given;

(i) Magnetic variation and deviation and gyrocompass errors are known and correctly applied by the person directing the movement of the vessel;

(j) A person whom he has determined is competent to steer the vessel is in the wheelhouse at all times;[1]

(k) If a pilot other than a member of the vessel's crew is employed, the pilot is informed of the draft, maneuvering characteristics, and peculiarities of the vessel and of any abnormal circumstances on the vessel that may affect its safe navigation.

(l) Current velocity and direction for the area to be transited are known by the person directing the movement of the vessel;

(m) Predicted set and drift are known by the person directing movement of the vessel;

(n) Tidal state for the area to be transited is known by the person directing movement of the vessel;

(o) The vessel's anchors are ready for letting go;

(p) The person directing the movement of the vessel sets the vessel's speed with consideration for:

(1) The prevailing visibility and weather conditions;

(2) The proximity of the vessel to fixed shore and marine structures;

(3) The tendency of the vessel underway to squat and suffer impairment of maneuverability when there is small underkeel clearance;

(4) The comparative proportions of the vessel and the channel;

(5) The density of marine traffic;

(6) The damage that might be caused by the vessel's wake;

(7) The strength and direction of the current; and

(8) Any local vessel speed limit;

(q) The tests required by §164.25 are made and recorded in the vessel's log; and

(r) The equipment required by this part is maintained in operable condition.

(s) Upon entering U.S. waters, the steering wheel or lever on the navigating bridge is operated to determine if the steering equipment is operating properly under manual control, unless the vessel has been steered under manual control from the navigating bridge within the preceding 2 hours, except when operating on the Great Lakes and their connecting and tributary waters.

(t) At least two of the steering-gear power units on the vessel are in operation when such units are capable of simultaneous operation, except when the vessel is sailing on the Great Lakes and their connecting and tributary waters, and except as required by paragraph (u) of this section.

(u) On each passenger vessel meeting the requirements of the International Convention for the Safety of Life at Sea, 1960 (SOLAS 60) and on each cargo vessel meeting the requirements of SOLAS 74 as amended in 1981, the number of steering-gear power units necessary to move the rudder from 35° on either side to 30° on the other in not

[1] See also 46 U.S.C. 8702(d), which requires an able seaman at the wheel on U.S. vessels of 100 gross tons or more in narrow or crowded waters during low visibility.

more than 28 seconds must be in simultaneous operation.

[CGD 74–77, 42 FR 5956, Jan. 31, 1977, as amended by CGD 83–004, 49 FR 43466, Oct. 29, 1984; CGD 91–203, 58 FR 27633, May 10, 1993; CGD 83–043, 60 FR 24771, May 10, 1995]

§ 164.13 Navigation underway: tankers.

(a) As used in this section, ''tanker'' means a self-propelled tank vessel, including integrated tug barge combinations, constructed or adapted primarily to carry oil or hazardous material in bulk in the cargo spaces and inspected and certificated as a tanker.

(b) Each tanker must have an engineering watch capable of monitoring the propulsion system, communicating with the bridge, and implementing manual control measures immediately when necessary. The watch must be physically present in the machinery spaces or in the main control space and must consist of at least a licensed engineer.

(c) Each tanker must navigate with at least two licensed deck officers on watch on the bridge, one of whom may be a pilot. In waters where a pilot is required, the second officer, must be an individual licensed and assigned to the vessel as master, mate, or officer in charge of a navigational watch, who is separate and distinct from the pilot.

(d) Except as specified in paragraph (e) of this section, a tanker may operate with an auto pilot engaged only if all of the following conditions exist:

(1) The operation and performance of the automatic pilot conforms with the standards recommended by the International Maritime Organization in IMO Resolution A.342(IX).

(2) A qualified helmsman is present at the helm and prepared at all times to assume manual control.

(3) The tanker is not operating in any of the following areas:

(i) The areas of the traffic separation schemes specified in subchapter P of this chapter.

(ii) The portions of a shipping safety fairway specified in part 166 of this chapter.

(iii) An anchorage ground specified in part 110 of this chapter.

(iv) An area within one-half nautical mile of any U.S. shore.

(e) A tanker equipped with an integrated navigation system, and complying with paragraph (d)(2) of this section, may use the system with the auto pilot engaged while in the areas described in paragraphs (d)(3) (i) and (ii) of this section. The master shall provide, upon request, documentation showing that the integrated navigation system—

(1) Can maintain a predetermined trackline with a cross track error of less than 10 meters 95 percent of the time;

(2) Provides continuous position data accurate to within 20 meters 95 percent of the time; and

(3) Has an immediate override control.

[CGD 91–203, 58 FR 27633, May 10, 1993, as amended by CGD 91–203, 58 FR 36141, July 6, 1993]

§ 164.15 Navigation bridge visibility.

(a) The arrangement of cargo, cargo gear, and trim of all vessels entering or departing from U.S. ports must be such that the field of vision from the navigation bridge conforms as closely as possible to the following requirements:

(1) From the conning position, the view of the sea surface must not be obscured by more than the lesser of two hip lengths or 500 meters (1640 feet) from dead ahead to 10 degrees on either side of the vessel. Within this arc of visibility any blind sector caused by cargo, cargo gear, or other permanent obstruction must not exceed 5 degrees.

(2) From the conning position, the horizontal field of vision must extend over an arc from at least 22.5 degrees abaft the beam on one side of the vessel, through dead ahead, to at least 22.5 degrees abaft the beam on the other side of the vessel. Blind sectors forward of the beam caused by cargo, cargo gear, or other permanent obstruction must not exceed 10 degrees each, nor total more than 20 degrees, including any blind sector within the arc of visibility described in paragraph (a)(1) of this section.

(3) From each bridge wing, the field of vision must extend over an arc from at least 45 degrees on the opposite bow, through dead ahead, to at least dead astern.

(4) From the main steering position, the field of vision must extend over an arc from dead ahead to at least 60 degrees on either side of the vessel.

(b) A clear view must be provided through at least two front windows at all times regardless of weather conditions.

[CGD 85–099, 55 FR 32247, Aug. 8, 1990]

§164.19 Requirements for vessels at anchor.

The master or person in charge of each vessel that is anchored shall ensure that:

(a) A proper anchor watch is maintained;

(b) Procedures are followed to detect a dragging anchor; and

(c) Whenever weather, tide, or current conditions are likely to cause the vessel's anchor to drag, action is taken to ensure the safety of the vessel, structures, and other vessels, such as being ready to veer chain, let go a second anchor, or get underway using the vessel's own propulsion or tug assistance.

[CGD 74–77, 42 FR 5956, Jan. 31, 1977]

§164.25 Tests before entering or getting underway.

(a) Except as provided in paragraphs (b) and (c) of this section no person may cause a vessel to enter into or get underway on the navigable waters of the United States unless no more than 12 hours before entering or getting underway, the following equipment has been tested:

(1) Primary and secondary steering gear. The test procedure includes a visual inspection of the steering gear and its connecting linkage, and, where applicable, the operation of the following:

(i) Each remote steering gear control system.

(ii) Each steering position located on the navigating bridge.

(iii) The main steering gear from the alternative power supply, if installed.

(iv) Each rudder angle indicator in relation to the actual position of the rudder.

(v) Each remote steering gear control system power failure alarm.

(vi) Each remote steering gear power unit failure alarm.

(vii) The full movement of the rudder to the required capabilities of the steering gear.

(2) All internal vessel control communications and vessel control alarms.

(3) Standby or emergency generator, for as long as necessary to show proper functioning, including steady state temperature and pressure readings.

(4) Storage batteries for emergency lighting and power systems in vessel control and propulsion machinery spaces.

(5) Main propulsion machinery, ahead and astern.

(b) Vessels navigating on the Great Lakes and their connecting and tributary waters, having once completed the test requirements of this subpart, are considered to remain in compliance until arriving at the next port of call on the Great Lakes.

(c) Vessels entering the Great Lakes from the St. Lawrence Seaway are considered to be in compliance with this sub-part if the required tests are conducted preparatory to or during the passage of the St. Lawrence Seaway or within one hour of passing Wolfe Island.

(d) No vessel may enter, or be operated on the navigable waters of the United States unless the emergency steering drill described below has been conducted within 48 hours prior to entry and logged in the vessel logbook, unless the drill is conducted and logged on a regular basis at least once every three months. This drill must include at a minimum the following:

(1) Operation of the main steering gear from within the steering gear compartment.

(2) Operation of the means of communications between the navigating bridge and the steering compartment.

(3) Operation of the alternative power supply for the steering gear if the vessel is so equipped.

(92 Stat. 1471 (33 U.S.C. 1221 et seq.); 49 CFR 1.46(n)(4))

[CGD 77–183, 45 FR 18925, Mar. 24, 1980, as amended by CGD 83–004, 49 FR 43466, Oct. 29, 1984]

§164.30 Charts, publications, and equipment: General.

No person may operate or cause the operation of a vessel unless the vessel

has the marine charts, publications, and equipment as required by §§ 164.33 through 164.41 of this part.

[CGD 82–055, 48 FR 44535, Sept. 29, 1983]

§ 164.33 Charts and publications.

(a) Each vessel must have the following:

(1) Marine charts of the area to be transited, published by the National Ocean Service, U.S. Army Corps of Engineers, or a river authority that—

(i) Are of a large enough scale and have enough detail to make safe navigation of the area possible; and

(ii) Are currently corrected.

(2) For the area to be transited, a currently corrected copy of, or applicable currently corrected extract from, each of the following publications:

(i) U.S. Coast Pilot.

(ii) Coast Guard Light List.

(3) For the area to be transited, the current edition of, or applicable current extract from:

(i) Tide tables published by the National Ocean Service.

(ii) Tidal current tables published by the National Ocean Service, or river current publication issued by the U.S. Army Corps of Engineers, or a river authority.

(b) As an alternative to the requirements for paragraph (a) of this section, a marine chart or publication, or applicable extract, published by a foreign government may be substituted for a U.S. chart and publication required by this section. The chart must be of large enough scale and have enough detail to make safe navigation of the area possible, and must be currently corrected. The publication, or applicable extract, must singly or in combination contain similar information to the U.S. Government publication to make safe navigation of the area possible. The publication, or applicable extract must be currently corrected, with the exceptions of tide and tidal current tables, which must be the current editions.

(c) As used in this section, ''currently corrected'' means corrected with changes contained in all Notices to Mariners published by Defense Mapping Agency Hydrographic/Topographic Center, or an equivalent foreign government publication, reasonably available to the vessel, and that is applicable to the vessel's transit.

[CGD 82–055, 48 FR 44535, Sept. 29, 1983]

§ 164.35 Equipment: All vessels.

Each vessel must have the following:

(a) A marine radar system for surface navigation.

(b) An illuminated magnetic steering compass, mounted in a binnacle, that can be read at the vessel's main steering stand.

(c) A current magnetic compass deviation table or graph or compass comparison record for the steering compass, in the wheelhouse.

(d) A gyrocompass.

(e) An illuminated repeater for the gyrocompass required by paragraph (d) of this section that is at the main steering stand, unless that gyrocompass is illuminated and is at the main steering stand.

(f) An illuminated rudder angle indicator in the wheelhouse.

(g) The following maneuvering information prominently displayed on a fact sheet in the wheelhouse:

(1) A turning circle diagram to port and starboard that shows the time and distance and advance and transfer required to alter course 90 degrees with maximum rudder angle and constant power settings, for either full and half speeds, or for full and slow speeds. For vessels whose turning circles are essentially the same for both directions, a diagram showing a turning circle in one direction, with a note on the diagram stating that turns to port and starboard are essentially the same, may be substituted.

(2) The time and distance to stop the vessel from either full and half speeds, or from full and slow speeds, while maintaining approximately the initial heading with minimum application of the rudder.

(3) For each vessel with a fixed propeller, a table of shaft revolutions per minute for a representative range of speeds.

(4) For each vessel with a controllable pitch propeller, a table of control settings for a representative range of speeds.

(5) For each vessel that is fitted with an auxiliary device to assist in maneuvering, such as a bow thruster, a table

of vessel speeds at which the auxiliary device is effective in maneuvering the vessel.

(6) The maneuvering information for the normal load and normal ballast condition for:

(i) Calm weather—wind 10 knots or less, calm sea;

(ii) No current;

(iii) Deep water conditions—water depth twice the vessel's draft or greater; and

(iv) Clean hull.

(7) At the bottom of the fact sheet, the following statement:

WARNING

The response of the (name of the vessel) may be different from that listed above if any of the following conditions, upon which the maneuvering information is based, are varied:

(1) Calm weather—wind 10 knots or less, calm sea;

(2) No current;

(3) Water depth twice the vessel's draft or greater;

(4) Clean hull; and

(5) Intermediate drafts or unusual trim.

(h) An echo depth sounding device.

(i) A device that can continuously record the depth readings of the vessel's echo depth sounding device, except when operating on the Great Lakes and their connecting and tributary waters.

(j) Equipment on the bridge for plotting relative motion.

(k) Simple operating instructions with a block diagram, showing the change-over procedures for remote steering gear control systems and steering gear power units, permanently displayed on the navigating bridge and in the steering gear compartment.

(l) An indicator readable from the centerline conning position showing the rate of revolution of each propeller, except when operating on the Great Lakes and their connecting and tributary waters.

(m) If fitted with controllable pitch propellers, an indicator readable from the centerline conning position showing the pitch and operational mode of such propellers, except when operating on the Great Lakes and their connecting and tributary waters.

(n) If fitted with lateral thrust propellers, an indicator readable from the centerline conning position showing the direction and amount of thrust of such propellers, except when operating on the Great Lakes and their connecting and tributary waters.

(o) A telephone or other means of communication for relaying headings to the emergency steering station. Also, each vessel of 500 gross tons and over and constructed on or after June 9, 1995 must be provided with arrangements for supplying visual compass-readings to the emergency steering station.

(92 Stat. 1471 (33 U.S.C. 1221 et seq.); 49 CFR 1.46(n)(4))

[CGD 74–77, 42 FR 5956, Jan. 31, 1977, as amended by CGD 77–183, 45 FR 18925, Mar. 24, 1980; CGD 83–004, 49 FR 43466, Oct. 29, 1984; CGD 83–043, 60 FR 24771, May 10, 1995; 60 FR 28834, June 2, 1995]

§164.37 Equipment: Vessels of 10,000 gross tons or more.

(a) Each vessel of 10,000 gross tons or more must have, in addition to the radar system under §164.35(a), a second marine radar system that operates independently of the first.

NOTE: Independent operation means two completely separate systems, from separate branch power supply circuits or distribution panels to antennas, so that failure of any component of one system will not render the other system inoperative.

(b) On each tanker of 10,000 gross tons or more that is subject to 46 U.S.C. 3708, the dual radar system required by this part must have a short range capability and a long range capability; and each radar must have true north features consisting of a display that is stabilized in azimuth.

(Titles I and II, 86 Stat. 426, 427 (33 U.S.C. 1224; 46 U.S.C. 391(a); 49 CFR 1.46(n)(4))

[CGD 77–016, 43 FR 32112, July 24, 1978, as amended by CGD 79–033, 44 FR 26741, May 7, 1979; CGD 79–033, 47 FR 34389, Aug. 9, 1982; USCG–1998–3799, 63 FR 35532, June 30, 1998]

§164.38 Automatic radar plotting aids (ARPA).

(a) The following definitions are used in this section—

Bulk means material in any quantity that is shipped, stored, or handled without benefit of package, label, mark or count and carried in integral or fixed independent tanks.

Constructed means a stage of construction where—

(1) The keel is laid;

(2) Construction identifiable with a specific ship begins; or

(3) Assembly of that ship has commenced comprising at least 50 tons or 1 percent of the estimated mass of all structural material, whichever is less.

Hazardous material means—

(1) A flammable liquid as defined in 46 CFR 30.10–22 or a combustible liquid as defined in 46 CFR 30.10–15;

(2) A material listed in table 151.05 of 46 CFR 151.05, table 1 of 46 CFR 153, or table 4 of 46 CFR Part 154; or

(3) A liquid, liquefied gas, or compressed gas listed in 49 CFR 172.101.

Self-propelled vessel includes those combinations of pushing vessel and vessel being pushed ahead which are rigidly connected in a composite unit and are required by Rule 24(b) of the International Regulations for Preventing Collisions at Sea, 1972 (72 COLREGS) (App. A to 33 CFR Part 81) to exhibit the lights prescribed in Rule 23 for a ''Power Driven Vessel Underway''.

Tank vessel means a vessel that is constructed or adapted to carry; or carries, oil or hazardous materials in bulk as cargo or cargo residue.

(b) An Automatic Radar Plotting Aid (ARPA) that complies with the standard for such devices adopted by the International Maritime Organization in its ''Operational Standards for Automatic Radar Plotting Aids'' (Appendix A), and that has both audible and visual alarms, must be installed as follows:

(1) Each self-propelled vessel, except a public vessel, of 10,000 gross tons or more carrying oil or hazardous materials in bulk as cargo or in residue on the navigable waters of the United States, or which transfers oil or hazardous materials in any port or place subject to the jurisdiction of the United States, must be equipped with an ARPA.

(2) Each tank vessel of 10,000 gross tons or more operating on the navigable waters of the United States must be equipped with an ARPA.

(3) Each self-propelled vessel of 15,000 gross tons or more that is not a tank vessel, and is not carrying oil or hazardous material in bulk as cargo or in residue operating on the navigable waters of the United States, and was constructed before September 1, 1984, must be equipped with an ARPA, except when it is operating on the Great Lakes and their connecting and tributary waters.

(4) Each vessel of 10,000 gross tons or more, except when operating on the Great Lakes and their connecting and tributary waters, constructed on or after September 1, 1984 must be equipped with an ARPA.

(c) [Reserved]

(d)(1) Each device required under paragraph (b) of this section must have a permanently affixed label containing:

(i) The name and address of the manufacturer; and

(ii) The following statement:

''This device was designed and manufactured to comply with the International Maritime Organization (IMO) 'Performance Standards for Automatic Radar Plotting Aids (ARPA).'''

(2) Each device allowed under paragraph (c) of this section must have a permanently affixed label containing;

(i) The name and address of the manufacturer; and

(ii) The following statement:

''This device was designed and manufactured to comply with the U.S. Maritime Administration's 'Collision Avoidance System Specification.'''

APPENDIX A TO § 164.38—PERFORMANCE STANDARDS FOR AUTOMATIC RADAR PLOTTING AIDS (ARPA)

1 Introduction

1.1 The Automatic Radar Plotting Aids (ARPA) should, in order to improve the standard of collision avoidance at sea:

.1 Reduce the work-load of observers by enabling them to automatically obtain information so that they can perform as well with multiple targets as they can by manually plotting a single target; and

.2 Provide continuous, accurate and rapid situation evaluation.

1.2 In addition to the General Requirements for Electronic Navigational Aids ([IMO] Res. A.281(VII)), the ARPA should comply with the following minimum performance standards.

2 Definitions

2.1 Definitions of terms in these performance standards are given in Annex 1.

3 Performance Standards

3.1 *Detection*

3.1.1 Where a separate facility is provided for detection of targets, other than by the radar observer, it should have a performance not inferior to that which could be obtained by the use of the radar display.

3.2 *Acquisition*

3.2.1 Target acquisition may be manual or automatic. However, there should always be a facility to provide for manual acquisition and cancellation. ARPA with automatic acquisition should have a facility to suppress acquisition in certain areas. On any range scale where acquisition is suppressed over a certain area, the area of acquisition should be indicated on the display.

3.2.2 Automatic or manual acquisition should have a performance not inferior to that which could be obtained by the user of the radar display.

3.3 *Tracking*

3.3.1 The ARPA should be able to automatically track, process, simultaneously display and continuously update the information on at least:

.1 20 targets, if automatic acquisition is provided, whether automatically or manually acquired; or

.2 10 targets, if only manual acquisition is provided.

3.3.2 If automatic acquisition is provided, description of the criteria of selection of targets for tracking should be provided to the user. If the ARPA does not track all targets visible on the display, targets which are being tracked should be clearly indicated on the display. The reliability of tracking should not be less than that obtainable using manual recording of successive target positions obtained from the radar display.

3.3.3 Provided the target is not subject to target swop, the ARPA should continue to track an acquired target which is clearly distinguishable on the display for 5 out of 10 consecutive scans.

3.3.4 The possibility of tracking errors, including target swop, should be minimized by ARPA design. A qualitative description of the effects of error sources on the automatic tracking and corresponding errors should be provided to the user, including the effects of low signal to noise and low signal to clutter ratios caused by sea returns, rain, snow, low clouds and non-synchronous emission.

3.3.5 The ARPA should be able to display on request at least four equally time-spaced past positions of any targets being tracked over a period of at least eight minutes.

3.4 *Display*

3.4.1 The Display may be a separate or integral part of the ship's radar. However, the ARPA display should include all the data required to be provided by a radar display in accordance with the performance standards for navigational radar equipment adopted by the Organization.

3.4.2 The design should be such that any malfunction of ARPA parts producing information additional to information to be produced by the radar as required by the performance standards for navigational equipment adopted by IMO should not affect the integrity of the basic radar presentation.

3.4.3 The display on which ARPA information is presented should have an effective diameter of at least 340 mm.

3.4.4 The ARPA facilities should be available on at least the following range scales:

.1 12 or 16 miles;

.2 3 or 4 miles.

3.4.5 There should be a positive indication of the range scale in use.

3.4.6 The ARPA should be capable of operating with a relative motion display with ''north-up'' and either ''head-up'' or ''course-up'' azimuth stabilization. In addition, the ARPA may also provide for a true motion display. If true motion is provided, the operator should be able to select for his display either true or relative motion. There should be a positive indication of the display mode and orientation in use.

3.4.7 The course and speed information generated by the ARPA for acquired targets should be displayed in a vector or graphic form which clearly indicates the target's predicted motion. In this regard:

.1 ARPA presenting predicted information in vector form only should have the option of both true and relative vectors;

.2 An ARPA which is capable of presenting target course and speed information in graphic form, should also, on request, provide the target's true and/or relative vector;

.3 Vectors displayed should be either time adjustable or have a fixed time-scale;

.4 A positive indication of the time-scale of the vector in use should be given.

3.4.8 The ARPA information should not obscure radar information in such a manner as to degrade the process of detecting targets. The display of ARPA data should be under the control of the radar observer. It should be possible to cancel the display of unwanted ARPA data.

3.4.9 Means should be provided to adjust independently the brilliance of the ARPA data and radar data, including complete elimination of the ARPA data.

3.4.10 The method of presentation should ensure that the ARPA data is clearly visible in general to more than one observer in the conditions of light normally experienced on the bridge of a ship by day and by night. Screening may be provided to shade the display from sunlight but not to the extent that it will impair the observer's ability to maintain a proper lookout. Facilities to adjust the brightness should be provided.

3.4.11 Provisions should be made to obtain quickly the range and bearing of any object which appears on the ARPA display.

3.4.12 When a target appears on the radar display and, in the case of automatic acquisition, enters within the acquisition area chosen by the observer or, in the case of manual acquisition, has been acquired by the observer, the ARPA should present in a period of not more than one minute an indication of the target's motion trend and display within three minutes the target's predicted motion in accordance with paragraphs 3.4.7, 3.6, 3.8.2 and 3.8.3.

3.4.13 After changing range scales on which the ARPA facilities are available or resetting the display, full plotting information should be displayed within a period of time not exceeding four scans.

3.5 *Operational Warnings*

3.5.1 The ARPA should have the capability to warn the observer with a visual and/or audible signal of any distinguishable target which closes to a range or transits a zone chosen by the observer. The target causing the warning should be clearly indicated on the display.

3.5.2 The ARPA should have the capability to warn the observer with a visual and/or audible signal of any tracked target which is predicted to close to within a minimum range and time chosen by the observer. The target causing the warning should be clearly indicated on the display.

3.5.3 The ARPA should clearly indicate if a tracked target is lost, other than out of range, and the target's last tracked position should be clearly indicated on the display.

3.5.4 It should be possible to activate or de-activate the operational warnings.

3.6 *Data Requirements*

3.6.1 At the request of the observer the following information should be immediately available from the ARPA in alphanumeric form in regard to any tracked target:

1. Present range to the target;
2. Present bearing of the target;.

.3 Predicted target range at the closest point of approach (CPA);

.4 Predicted time to CPA (TCPA);

.5 Calculated true course of target;

.6 Calculated true speed of target.

3.7 *Trial Manoeuvre*

3.7.1 The ARPA should be capable of simulating the effect on all tracked targets of an own ship manoeuvre without interrupting the updating of target information. The simulation should be initiated by the depression either of a spring-loaded switch, or of a function key, with a positive identification on the display.

3.8 *Accuracy*

3.8.1 The ARPA should provide accuracies not less than those given in paragraphs 3.8.2 and 3.8.3 for the four scenarios defined in Annex 2. With the sensor errors specified in Annex 3, the values given relate to the best possible manual plotting performance under environmental conditions of plus and minus ten degrees of roll.

3.8.2 An ARPA should present within one minute of steady state tracking the relative motion trend of a target with the following accuracy values (95 percent probability values):

Scenario/data	Relative course (degrees)	Relative speed (Knots)	CPA (n.m.)
1	11	2.8	1.6
2	7	0.6	.....
3	14	2.2	1.8
4	15	1.5	2.0

3.8.3 An ARPA should present within three minutes of steady state tracking the motion of a target with the following accuracy values (95 percent probability values):

Scenario/data	Relative course (degrees)	Relative speed (knots)	C.P.A. (n.m.)	TCPA (mins)	True course (degrees)	True speed (knots)
1	3.0	0.8	0.5	1.0	7.5	1.2
2	2.3	.3	.....	.....	2.9	.8
3	4.4	.9	.7	1.0	3.3	1.0
4	4.6	.8	.7	1.0	2.6	1.2

3.8.4 When a tracked target, or own ship, has completed a manoeuvre, the system should present in a period of not more than one minute an indication of the target's motion trend, and display within three minutes the target's predicted motion in accordance with paragraphs 3.4.7, 3.6, 3.8.2 and 3.8.3

3.8.5 The ARPA should be designed in such a manner that under the most favorable conditions of own ship motion the error contribution from the ARPA should remain insignificant compared to the errors associated with the input sensors, for scenarios of Annex 2.

3.9 *Connections with other equipment*

3.9.1 The ARPA should not degrade the performance of any equipment providing sensor inputs. The connection of the ARPA to any other equipment should not degrade the performance of that equipment.

3.10 *Performance test and warnings*

3.10.1 The ARPA should provide suitable warnings of ARPA malfunction to enable the observer to monitor the proper operation of the system. Additionally test programmes should be available so that the overall performance of ARPA can be assessed periodically against a known solution.

3.11 *Equipment used with ARPA*

3.11.1 Log and speed indicators providing inputs to ARPA equipment should be capable of providing the ship's speed through the water.

ANNEX 1 TO APPENDIX A—DEFINITIONS OF TERMS TO BE USED ONLY IN CONNECTION WITH ARPA PERFORMANCE STANDARDS

Relative course—The direction of motion of a target related to own ship as deduced from a number of measurements of its range and bearing on the radar. Expressed as an angular distance from North.

Relative speed—The speed of a target related to own ship, as deduced from a number of measurements of its range and bearing on the radar.

True course—The apparent heading of a target obtained by the vectorial combination of the target's relative motion and ship's own motion[1]. Expressed as an angular distance from North.

True speed—The speed of a target obtained by the vectorial combination of its relative motion and own ship's motion[1].

Bearing—The direction of one terrestrial point from another. Expressed as an angular distance from North.

Relative motion display—The position of own ship on such a display remains fixed.

True motion display—The position of own ship on such display moves in accordance with its own motion.

Azimuth stabilization—Own ship's compass information is fed to the display so that echoes of targets on the display will not be caused to smear by changes of own ship's heading.

/North-up—The line connecting the center with the top of this display is North.

/Head-up—The line connecting the center with the top of the display is own ship heading.

/Course-up—An intended course can be set to the line connecting the center with the top of the display.

Heading—The direction in which the bow of a vessel is pointing. Expressed as an angular distance from North.

Target's predicted motion—The indication on the display of a liner extrapolation into the future of a target's motion, based on measurements of the target's range and bearing on the radar in the recent past.

[1] For the purpose of these definitions there is no need to distinguish between sea or ground stabilization.

Target's motion trend—An early indication of the target's predicted motion.

Radar Plotting—The whole process of target detection, tracking, calculation of parameters and display of information.

Detection—The recognition of the presence of a target.

Acquisition—The selection of those targets requiring a tracking procedure and the initiation of their tracking.

Tracking—The process of observing the sequential changes in the position of a target, to establish its motion.

Display—The plan position presentation of ARPA data with radar data.

Manual—An activity which a radar observer performs, possibly with assistance from a machine.

Automatic—An activity which is performed wholly by a machine.

ANNEX 2 APPENDIX A—OPERATIONAL SCENARIOS

For each of the following scenarios predictions are made at the target position defined after previously tracking for the appropriate time of one or three minutes:

Scenario 1

Own ship course—000°
Own ship speed—10 kt
Target range—8 n.m.
Bearing of target—000°
Relative course of target—180°
Relative speed of target—20 kt

Scenario 2

Own ship course—000°
Own ship speed—10 kt
Target range—1 n.m.
Bearing of target—000°
Relative course of target—090°
Relative speed of target—10 kt

Scenario 3

Own ship course—000°
Own ship speed—5 kt
Target range—8 n.m.
Bearing of target—045°
Relative course of target—225°
Relative speed of target—20 kt

Scenario 4

Own ship course—000°
Own ship speed—25 kt
Target range—8 n.m.
Bearing of target—045°
Relative course of target—225°
Relative speed of target—20 kt

ANNEX 3 TO APPENDIX A—SENSOR ERRORS

The accuracy figures quoted in paragraph 3.8 are based upon the following sensor errors and are appropriate to equipment complying

with the Organization's performance standards for shipborne navigational equipment.[2]

Note: o means ''standard deviation''

Radar

Target Glint (Scintillation) (for 200 m length target)

Along length of target o = 30 m. (normal distribution)

Across beam of target o = 1 m. (normal distribution)

Roll-Pitch Bearing. The bearing error will peak in each of the four quadrants around own ship for targets on relative bearings of 045°, 135°, 225° and 315° and will be zero at relative bearings of 0°, 90°, 180° and 270°. This error has a sinusoidal variation at twice the roll frequency. For a 10° roll the mean error is 0.22° with a 0.22° peak sine wave superimposed.

Beam shape—assumed normal distribution giving bearing error with o = 0.05.

Pulse shape— assumed normal distribution giving range error with o = 20 meters.

Antenna backlash—assumed rectangular distribution giving bearing error ±0.5 maximum.

Quantization

Bearing—rectangular distribution ±0.01° maximum.

Range—rectangular distribution ±0.01 n.m. maximum.

Bearing encoder assumed to be running from a remote synchro giving bearing errors with a normal distribution o = 0.03°

Gyro compass

Calibration error 0.5°.

Normal distribution about this with o = 0.12°.

Log

Calibration error 0.5 kt.

Normal distribution about this, 3 o = 0.2 kt.

[2] In calculations leading to the accuracy figures quoted in paragraph 3.8, these sensor error sources and magnitudes were used. They were arrived at during discussions with national government agencies and equipment manufacturers and are appropriate to equipments complying with the Organization's draft performance standards for radar equipment (preliminary) (NAV XXII/WP.14), gyro compasses (NAV XXI/9, Annex X) and logs (preliminary) (NAV XXII/WP.15).

Independent studies carried out by national government agencies and equipment manufacturers have resulted in similar accuracies, where comparisons were made.

APPENDIX B TO § 164.38—U.S. MARITIME ADMINISTRATION COLLISION AVOIDANCE SYSTEM SPECIFICATION

A collision system designed as a supplement to both surface search navigational radars via interswitching shall be installed. The system shall provide unattended monitoring of all radar echoes and automatic audio and visual alarm signals that will alert the watch officer of a possible threat. The display shall be contained within a console capable of being installed adjacent to the radar displays in the wheelhouse and may form a part of the bridge console.

Provision for signal input from the ship's radars, gyro compass, and speed log, without modification to these equipments shall be made. The collision avoidance system, whether operating normally or having failed, must not introduce any spurious signals or otherwise degrade the performance of the radars, the gyro compass or the speed log.

Computer generated display data for each acquired target shall be in the form of a line or vector indicating true or relative target course, speed and both present and extrapolated future positions. Data shall be automatically displayed on a cathode ray tube or other suitable display contrivance sufficiently bright and unobstructed to permit viewing by more than one person at a time.

In addition to displaying the collision potential of the most threatening fixed and moving targets, the system shall be capable of simultaneously showing land masses.

The system display shall include a heading indication and bearing ring. The system shall also have the capability of allowing the operator to select ''head-up'' and to cancel the vector or line presentation of any of the targets. The presentation shall be nonsmearing when changing modes or display scales in order to permit rapid evaluation of the displayed data.

Target acquisition, for display data purposes, may be manual, automatic or both, as specified by Owner.

For any manual acquisition system the alarms shall be initiated by a preset minimum range; and likewise for any automatic acquisition system the alarms shall be initiated by a preset minimum acceptable passing distance (CPA—Closest Point of Approach) and a preset advance warning time (TCPA—Time to Closest Point of Approach). Means shall be provided to silence the audio alarm for a given threat but the alarm shall resound upon a subsequent threat. The visual alarm shall continue to operate until all threats have been eliminated. If the collision avoidance system fails to perform as indicated above, after the system is set for unattended monitoring, the system shall produce both audio and visual warning alarms.

The system shall be capable of simulating a trial maneuver.

In addition to the target display, an alphanumeric readout shall be provided which can present range, bearing, course, speed, CPA and TCPA for any selected target, either on the target display or by other display means.

The collision avoidance system shall be energized from the interior communications panel board in the wheelhouse.

The collision avoidance function may be incorporated in an integrated conning system, provided that failure of any other integrated system component will not degrade the collision avoidance function.

[CGD 79–148, 45 FR 54039, Aug. 14, 1980; 45 FR 71800, Oct. 30, 1980, as amended by CGD 83–004, 49 FR 43467, Oct. 29, 1984; USCG–1998–3799, 63 FR 35532, June 30, 1998]

§164.39 Steering gear: Foreign tankers.

(a) This section applies to each foreign tanker of 10,000 gross tons or more, except a public vessel, that—

(1) Transfers oil at a port or place subject to the jurisdiction of the United States; or

(2) Otherwise enters or operates in the navigable waters of the United States, except a vessel described by §164.02 of this part.

(b) *Definitions.* The terms used in this section are as follows:

Constructed means the same as in Chapter II–1, Regulations 1.1.2 and 1.1.3.1, of SOLAS 74.

Existing tanker means a tanker—

(1) For which the building contract is placed on or after June 1, 1979;

(2) In the absence of a building contract, the keel of which is laid or which is at a similar stage of construction on or after January 1, 1980;

(3) The delivery of which occurs on or after June 1, 1982; or

(4) That has undergone a major conversion contracted for on or after June 1, 1979; or construction of which was begun on or after January 1, 1980, or completed on or after June 1, 1982.

Public vessel, oil, hazardous materials, and *foreign vessel* mean the same as in 46 U.S.C. 2101.

SOLAS 74 means the International Convention for the Safety of Life at Sea, 1974, as amended.

Tanker means a self-propelled vessel defined as a tanker by 46 U.S.C. 2101(38) or as a tank vessel by 46 U.S.C. 2101(39).

(c) Each tanker constructed on or after September 1, 1984, must meet the applicable requirements of Chapter II–1, Regulations 29 and 30, of SOLAS 74.

(d) Each tanker constructed before September 1, 1984, must meet the requirements of Chapter II–1, Regulation 29.19, of SOLAS 74.

(e) Each tanker of 40,000 gross tons or more, constructed before September 1, 1984, that does not meet the single-failure criterion of Chapter II–1, Regulation 29.16, of SOLAS 74, must meet the requirements of Chapter II–1, Regulation 29.20, of SOLAS 74.

(f) Each tanker constructed before September 1, 1984, must meet the applicable requirements of Chapter II–1, Regulations 29.14 and 29.15, of SOLAS 74.

[CGD 83–043, 60 FR 24771, May 10, 1995]

§164.40 Devices to indicate speed and distance.

(a) Each vessel required to be fitted with an Automatic Radar Plotting Aid (ARPA) under §164.38 of this part must be fitted with a device to indicate speed and distance of the vessel either through the water or over the ground.

(b) The device must meet the following specifications:

(1) The display must be easily readable on the bridge by day or night.

(2) Errors in the indicated speed, when the vessel is operating free from shallow water effect, and from the effects of wind, current, and tide, should not exceed 5 percent of the speed of the vessel, or 0.5 knot, whichever is greater.

(3) Errors in the indicated distance run, when the vessel is operating free from shallow water effect, and from the effects of wind, current, and tide, should not exceed 5 percent of the distance run of the vessel in one hour or 0.5 nautical mile in each hour, whichever is greater.

[CGD 83–004, 49 FR 43467, Oct. 29, 1984, as amended by USCG–1998–3799, 63 FR 35532, June 30, 1998]

§164.41 Electronic position fixing devices.

(a) Each vessel calling at a port in the continental United States, including Alaska south of Cape Prince of Wales, except each vessel owned or bareboat chartered and operated by the

United States, or by a state or its political subdivision, or by a foreign nation, and not engaged in commerce, must have one of the following:

(1) A Type I or II LORAN C receiver as defined in Section 1.2(e), meeting Part 2 (Minimum Performance Standards) of the Radio Technical Commission for Marine Services (RTCM) Paper 12–78/DO–100 dated December 20, 1977, entitled ''Minimum Performance Standards (MPS) Marine Loran–C Receiving Equipment''. Each receiver installed must be labeled with the information required under paragraph (b) of this section.

(2) A satellite navigation receiver with:

(i) Automatic acquisition of satellite signals after initial operator settings have been entered; and

(ii) Position updates derived from satellite information during each usable satellite pass.

(3) A system that is found by the Commandant to meet the intent of the statements of availability, coverage, and accuracy for the U.S. Coastal Confluence Zone (CCZ) contained in the U.S. ''Federal Radionavigation Plan'' (Report No. DOD–NO 4650.4–P, I or No. DOT–TSC–RSPA–80–16, I). A person desiring a finding by the Commandant under this subparagraph must submit a written application describing the device to the Assistant Commandant for Operations, 2100 Second Street SW., Washington, DC 20593–0001. After reviewing the application, the Commandant may request additional information to establish whether or not the device meets the intent of the Federal Radionavigation Plan.

NOTE: The Federal Radionavigation Plan is available from the National Technical Information Service, Springfield, Va. 22161, with the following Government Accession Numbers:

Vol 1, ADA 116468
Vol 2, ADA 116469
Vol 3, ADA 116470
Vol 4, ADA 116471

(b) Each label required under paragraph (a)(1) of this section must show the following:

(1) The name and address of the manufacturer.

(2) The following statement by the manufacturer:

This receiver was designed and manufactured to meet Part 2 (Minimum Performance Standards) of the RTCM MPS for Marine Loran–C Receiving Equipment.

(Sec. 12, 92 Stat. 1477 (33 U.S.C. 1231); 49 CFR 1.46(n)(4))

[CGD 81–081, 47 FR 58244, Dec. 30, 1982, as amended by CGD 88–052, 53 FR 25122, July 1, 1988; CGD 96–026, 61 FR 33669, June 28, 1996; CGD 97–023, 62 FR 33365, June 19, 1997; USCG–1998–3799, 63 FR 35532, June 30, 1998]

§ 164.42 Rate of turn indicator.

Each vessel of 100,000 gross tons or more constructed on or after September 1, 1984 shall be fitted with a rate of turn indicator.

[CGD 83–004, 49 FR 43468, Oct. 29, 1984]

§ 164.43 Automatic Identification System Shipborne Equipment.

(a) Each vessel required to provide automated position reports to a Vessel Traffic Service (VTS) must do so by an installed Automatic Identification System Shipborne Equipment (AISSE) system consisting of a:

(1) Twelve-channel all-in-view Differential Global Positioning System (dGPS) receiver;

(2) Marine band Non-Directional Beacon receiver capable of receiving dGPS error correction messages;

(3) VHF—FM transceiver capable of Digital Selective Calling (DSC) on the designated DSC frequency; and

(4) Control unit.

(b) An AISSE must have the following capabilities:

(1) Use dGPS to sense the position of the vessel and determine the time of the position using Universal Coordinated Time (UTC);

(2) Fully use the broadcast type 1, 2, 3, 5, 6, 7, 9, and 16 messages, as specified in RTCM Recommended Standards for Differential NAVSTAR GPS Service in determining the required information;

(3) Achieve a position error which is less than ten meters (32.8 feet) 2 distance root mean square (2 drms) from the true North American Datum of 1983 (NAD 83) in the position information transmitted to a VTS;

(4) Achieve a course error of less than 0.5 degrees from true course over ground in the course information transmitted to a VTS;

(5) Achieve a speed error of less than 0.05 knots from true speed over ground in the speed information transmitted to a VTS;

(6) Receive and comply with commands broadcast from a VTS as DSC messages on the designated DSC frequency;

(7) Receive and comply with RTCM messages broadcast as minimum shift keying modulated medium frequency signals in the marine radiobeacon band, and supply the messages to the dGPS receiver;

(8) Transmit the vessel's position, tagged with the UTC at position solution, course over ground, speed over ground, and Lloyd's identification number to a VTS;

(9) Display a visual alarm to indicate to shipboard personnel when a failure to receive or utilize the RTCM messages occurs;

(10) Display a separate visual alarm which is triggered by a VTS utilizing a DSC message to indicate to shipboard personnel that the U.S. Coast Guard dGPS system cannot provide the required error correction messages; and

(11) Display two RTCM type 16 messages, one of which must display the position error in the position error broadcast.

(c) An AISSE is considered non-operational if it fails to meet the requirements of paragraph (b) of this section.

NOTE: Vessel Traffic Service (VTS) areas and operating procedures are set forth in Part 161 of this chapter.

[CGD 90–020, 59 FR 36334, July 15, 1994, as amended by CGD 97–023, 62 FR 33365, June 19, 1997]

§164.51 Deviations from rules: Emergency.

Except for the requirements of §164.53(b), in an emergency, any person may deviate from any rule in this part to the extent necessary to avoid endangering persons, property, or the environment.

[CGD 74–77, 42 FR 5956, Jan. 31, 1977]

§164.53 Deviations from rules and reporting: Non-operating equipment.

(a) If during a voyage any equipment required by this part stops operating properly, the person directing the movement of the vessel may continue to the next port of call, subject to the directions of the District Commander or the Captain of the Port, as provided by Part 160 of this chapter.

(b) If the vessel's radar, radio navigation receivers, gyrocompass, echo depth sounding device, or primary steering gear stops operating properly, the person directing the movement of the vessel must report or cause to be reported that it is not operating properly to the nearest Captain of the Port, District Commander, or, if participating in a Vessel Traffic Service, to the Vessel Traffic Center, as soon as possible.

(Sec. 2, Pub. L. 95–474, 92 Stat. 1471 (33 U.S.C. 1221); 49 CFR 1.46(n)(4))

[CGD 74–77, 42 FR 5956, Jan. 31, 1977]

EDITORIAL NOTE: For FEDERAL REGISTER citations affecting §164.53, see the List of CFR Sections Affected in the Finding Aids section of this volume.

§164.55 Deviations from rules: Continuing operation or period of time.

The Captain of the Port, upon written application, may authorize a deviation from any rule in this part if he determines that the deviation does not impair the safe navigation of the vessel under anticipated conditions and will not result in a violation of the rules for preventing collisions at sea. The authorization may be issued for vessels operating in the waters under the jurisdiction of the Captain of the Port for any continuing operation or period of time the Captain of the Port specifies.

[CGD 74–77, 42 FR 5956, Jan. 31, 1977]

§164.61 Marine casualty reporting and record retention.

When a vessel is involved in a marine casualty as defined in 46 CFR 4.03–1, the master or person in charge of the vessel shall:

(a) Ensure compliance with 46 CFR Subpart 4.05, ''Notice of Marine Casualty and Voyage Records;'' and

(b) Ensure that the voyage records required by 46 CFR 4.05–15 are retained for:

(1) 30 days after the casualty if the vessel remains in the navigable waters of the United States; or

(2) 30 days after the return of the vessel to a United States port if the vessel

departs the navigable waters of the United States within 30 days after the marine casualty.

[CGD 74–77, 42 FR 5956, Jan. 31, 1977]

§ 164.70 Definitions.

For purposes of §§ 164.72 through 164.82, the term—

Current edition means the most recent published version of a publication, chart, or map required by § 164.72.

Currently corrected edition means a current or previous edition of a publication required by § 164.72, corrected with changes that come from Notices to Mariners (NTMs) or Notices to Navigation reasonably available and that apply to the vessel's transit. Hand-annotated river maps from the U.S. Army Corps of Engineers (ACOE) are currently corrected editions if issued within the previous 5 years.

Great Lakes means the Great Lakes and their connecting and tributary waters including the Calumet River as far as the Thomas J. O'Brien Lock and Controlling Works (between miles 326 and 327), the Chicago River as far as the east side of the Ashland Avenue Bridge (between miles 321 and 322), and the Saint Lawrence River as far east as the lower exit of Saint Lambert Lock.

Swing-meter means an electronic or electric device that indicates the rate of turn of the vessel on board which it is installed.

Towing vessel means a commercial vessel engaged in or intending to engage in pulling, pushing or hauling alongside, or any combination of pulling, pushing, or hauling alongside.

Western Rivers means the Mississippi River, its tributaries, South Pass, and Southwest Pass, to the navigational-demarcation lines dividing the high seas from harbors, rivers, and other inland waters of the United States, and the Port Allen-Morgan City Alternative Route, and that part of the Atchafalaya River above its junction with the Port Allen-Morgan City Alternative Route including the Old River and the Red River and those waters specified by §§ 89.25 and 89.27 of this chapter, and such other, similar waters as are designated by the COTP.

[CGD 94–020, 61 FR 35072, July 3, 1996]

§ 164.72 Navigational-safety equipment, charts or maps, and publications required on towing vessels.

(a) Except as provided by § 164.01(b), each towing vessel must be equipped with the following navigational-safety equipment:

(1) *Marine Radar.* By August 2, 1997, a marine radar that meets the following applicable requirements:

(i) For a vessel of less than 300 tons gross tonnage that engages in towing on navigable waters of the U.S., including Western Rivers, the radar must meet—

(A) The requirements of the Federal Communications Commission (FCC) specified by 47 CFR part 80; and

(B) RTCM Standard for Marine Radar Equipment Installed on Ships of Less Than 300 Tons Gross Tonnage, RTCM Paper 71–95/SC112–STD, Version 1.1, display Category II and stabilization Category Bravo.

(ii) For a vessel of less than 300 tons gross tonnage that engages in towing seaward of navigable waters of the U.S. or more than three nautical miles from shore on the Great Lakes, the radar must meet—

(A) The requirements of the FCC specified by 47 CFR part 80; and

(B) RTCM Standard for Marine Radar Equipment Installed on Ships of Less Than 300 Tons Gross Tonnage, RTCM Paper 71–95/SC112–STD, Version 1.1, display Category I and stabilization Category Alpha.

(iii) For a vessel of 300 tons gross tonnage or more that engages in towing on navigable waters of the U.S., including Western rivers, the radar must meet—

(A) The requirements of the Federal Communications Commission (FCC) specified by 47 CFR part 80; and

(B) RTCM Recommended Standards for Marine Radar Equipment Installed on Ships of 300 Tons Gross Tonnage and Upwards, RTCM Paper 191–93/SC112–X, Version 1.2 except the requirements for azimuth stabilization in paragraph 3.10.

(iv) For a vessel of 300 tons gross tonnage or more that engages in towing seaward of navigable waters of the U.S. or more than three nautical miles from shore on the Great Lakes, the radar must meet—

(A) The requirements of the FCC specified by 47 CFR Part 80; and

(B) RTCM Recommended Standards for Marine Radar Equipment Installed on Ships of 300 Tons Gross Tonnage and Upwards, RTCM Paper 191–93/SC112–X, Version 1.2.

(v) A towing vessel with an existing radar must meet the applicable requirements of paragraphs (a)(1) (i) through (iv) of this section by August 2, 1998; except that a towing vessel with an existing radar must meet the display and stabilization requirements of paragraph (a)(1)(ii)(B) of this section by August 2, 2001.

(2) *Searchlight.* A searchlight, directable from the vessel's main steering station and capable of illuminating objects at a distance of at least two times the length of the tow.

(3) *VHF–FM Radio.* An installation or multiple installations of VHF–FM radios as prescribed by part 26 of this chapter and 47 CFR part 80, to maintain a continuous listening watch on the designated calling channel, VHF–FM Channel 13 (except on portions of the Lower Mississippi River, where VHF–FM Channel 67 is the designated calling channel), and to separately monitor the International Distress and Calling Channel, VHF–FM Channel 16, except when transmitting or receiving traffic on other VHF–FM channels or when participating in a Vessel Traffic Service (VTS) or monitoring a channel of a VTS. (Each U.S. towing vessel of 26 feet (about 8 meters) or more in length, except a public vessel, must hold a ship-radio-station license for radio transmitters (including radar and EPIRBs), and each operator must hold a restricted operator's license or higher. To get an application for either license, call (800) 418–FORM or (202) 418–FORM, or write to the FCC; Wireless Bureau, Licensing Division; 1270 Fairfield Road; Gettysburg, PA 17325–7245.)

(4) *Magnetic Compass.* Either—

(i) An illuminated swing-meter or an illuminated car-type magnetic steering compass readable from the vessel's main steering station, if the vessel engages in towing exclusively on Western Rivers; or

(ii) An illuminated card-type magnetic steering compass readable from the vessel's main steering station.

(5) *Echo Depth-Sounding Device.* By August 2, 2001, an echo depth-sounding device readable from the vessel's main steering station, unless the vessel engages in towing exclusively on Western Rivers.

(6) *Electronic Position-Fixing Device.* An electronic position-fixing device, either a LORAN–C receiver or a satellite navigational system such as the Global Positioning System (GPS) as required by §164.41, if the vessel engages in towing seaward of navigable waters of the U.S. or more than three nautical miles from shore on the Great Lakes.

(b) Each towing vessel must carry on board and maintain the following:

(1) *Charts or maps.* Marine charts or maps of the areas to be transited, published by the National Ocean Service (NOS), the ACOE, or a river authority that satisfy the following requirements:

(i) The charts or maps must be of a large enough scale and have enough detail to make safe navigation of the areas possible.

(ii) The charts or maps must be either—

(A) Current editions or currently corrected editions, if the vessel engages in towing exclusively on navigable waters of the U.S., including Western Rivers; or

(B) Currently corrected editions, if the vessel engages in towing seaward of navigable waters of the U.S. or more than three nautical miles from shore on the Great Lakes.

(iii) The charts or maps may be, instead of charts or maps required by paragraphs (b)(1) (i) and (ii) of this section, currently corrected marine charts or maps, or applicable extracts, published by a foreign government. These charts or maps, or applicable extracts, must contain information similar to that on the charts or maps required by paragraphs (b)(1) (i) and (ii) of this section, be of large enough scale, and have enough detail to make safe navigation of the areas possible, and must be currently corrected.

(2) *General publications.* A currently corrected edition of, or an applicable currently corrected extract from, each of the following publications for the area to be transited:

(i) If the vessel is engaged in towing exclusively on Western Rivers—

(A) U.S. Coast Guard Light List;

(B) Applicable Notices to Navigation published by the ACOE, or Local Notices to Mariners (LNMs) published by the Coast Guard, for the area to be transited, when available; and

(C) River-current tables published by the ACOE or a river authority, if available.

(ii) If the vessel is engaged other than in towing exclusively on Western Rivers—

(A) Coast Guard Light List;

(B) Notices to Mariners published by the Defense Mapping Agency, or LNMs published by the Coast Guard;

(C) Tidal-current tables published by the NOS, or river-current tables published by the ACOE or a river authority:

(D) Tide tables published by the NOS; and

(E) U.S. Coast Pilot.

(c) Table 164.72, following, summarizes the navigational-safety equipment, charts or maps, and publications required for towing vessels of 12 meters or more in length engaged in towing:

TABLE 164.72.—EQUIPMENT, CHARTS OR MAPS, AND PUBLICATIONS FOR TOWING VESSELS OF12 METERS OR MORE IN LENGTH

	Western rivers	U.S. navigable waters other than western rivers	Waters seaward of navigable waters and 3 NM or more from shore on the Great Lakes
Marine Radar:			
Towing Vessels of Less Than 300 GT.	RTCM Paper 71–95/SC112–STD Version 1.1, Display Category II [1] Stabilization Category BRAVO.	RTCM Paper 71–95/SC112–STD Version 1.1, Display Category II [1] Stabilization Category BRAVO.	RTCM Paper 71–95/SC112–STD Version 1.1, Display Category I [2] Stabilization Category ALPHA.
Towing Vessels of 300 GT or More.	RTCM Paper 191–93/SC112–X Version 1.2 (except the Azmuth stabilization requirement in paragraph 3.10).[1].	RTCM Paper 191–93/SC112–X Version 1.2 (except the Azmuth stabilization requirement in paragraph 3.10).[1].	RTCM Paper 191–93/SC112–X Version 1.2.[1]
Searchlight	X	X	X
VHF–FM Radio	X	X	X
Magnetic Compass	X [3]	X	X
Swing-Meter	X [3]		
Echo Depth-Sounding Device.		X	X
Electronic Position-Fixing Device.			X
Charts or Maps	(1) Large enough scale	(1) Large enough scale	(1) Large enough scale.
	(2) Current edition or currently corrected edition	(2) Current edition or currently corrected edition	(2) Currently corrected edition.
General Publications	(1) U.S. Coast Guard Light List	(1) U.S. Coast Guard Light List	(1) U.S. Coast Guard Light List.
	(2) Notices to Navigation or Local Notices to Mariners.	(2) Local Notices to Mariners	(2) Local Notices to Mariners.
	(3) River-current Tables	(3) Tidal-current Tables	(3) Tidal-current Tables.
		(4) Tide Tables	(4) Tide Tables.
		(5) U.S. Coast Pilot	(5) U.S. Coast Pilot.

Notes:

[1] Towing vessels with existing radar must meet this requirement by August 2, 1998.

[2] Towing vessels with existing radar must meet this requirement by August 2, 1998 but do not need to meet the display and stabilization requirements until August 2, 2001.

[3] A towing vessel may carry either a swing-meter or a magnetic compass.

[CGD 94–020, 61 FR 35073, July 3, 1996, as amended by CGD 97–034, 62 FR 40272, July 28, 1997; USCG–1999–5832, 64 FR 34715, June 29, 1999]

§ 164.74 Towline and terminal gear for towing astern.

(a) *Towline.* The owner, master, or operator of each vessel towing astern shall ensure that the strength of each towline is adequate for its intended service, considering at least the following factors:

(1) The size and material of each towline must be—

(i) Appropriate for the horsepower or bollard pull of the vessel;

(ii) Appropriate for the static loads and dynamic loads expected during the intended service;

(iii) Appropriate for the sea conditions expected during the intended service;

(iv) Appropriate for exposure to the marine environment and to any chemicals used or carried on board the vessel;

(v) Appropriate for the temperatures of normal stowage and service on board the vessel;

(vi) Compatible with associated navigational-safety equipment; and

(vii) Appropriate for the likelihood of mechanical damage.

(2) Each towline as rigged must be—

(i) Free of knots;

(ii) Spliced with a thimble, or have a poured socket at its end; and

(iii) Free of wire clips except for temporary repair, for which the towline must have a thimble and either five wire clips or as many wire clips as the manufacturer specifies for the nominal diameter and construction of the towline, whichever is more.

(3) The condition of each towline must be monitored through the—

(i) Keeping on board the towing vessel or in company files of a record of the towline's initial minimum breaking strength as determined by the manufacturer, by a classification (''class'') society authorized in § 157.04 of this chapter, or by a tensile test that meets API Specification 9A, Specification for Wire Rope, Section 3; ASTM D4268–93, Standard Test Method for Testing Fiber Ropes; or Cordage Institute CIA 3, Standard Test Methods for Fiber Rope Including Standard Terminations;

(ii) If the towline is purchased from another owner, master, or operator of a vessel with the intent to use it as a towline or if it is retested for any reason, keeping on board the towing vessel or in company files of a record of each retest of the towline's minimum breaking strength as determined by a class society authorized in § 157.04 of this chapter or by a tensile test that meets API Specification 9A, Section 3; ASTM D4268–93; or Cordage Institute CIA 3, Standard Test Methods;

(iii) Conducting visual inspections of the towline in accordance with the manufacturer's recommendations, or at least monthly, and whenever the serviceability of the towline is in doubt (the inspections being conducted by the owner, master, or operator, or by a person on whom the owner, master, or operator confers the responsibility to take corrective measures appropriate for the use of the towline);

(iv) Evaluating the serviceability of the whole towline or any part of the towline, and removing the whole or part from service either as recommended by the manufacturer or a class society authorized in § 157.04 of this chapter or in accordance with a replacement schedule developed by the owner, master, or operator that accounts for at least the—

(A) Nautical miles on, or time in service of, the towline;

(B) Operating conditions experienced by the towline;

(C) History of loading of the towline;

(D) Surface condition, including corrosion and discoloration, of the towline;

(E) Amount of visible damage to the towline;

(F) Amount of material deterioration indicated by measurements of diameter and, if applicable, measurements of lay extension of the towline; and

(G) Point at which a tensile test proves the minimum breaking strength of the towline inadequate by the standards of paragraph (a)(1) of this section, if necessary; and

(v) Keeping on board the towing vessel or in company files of a record of the material condition of the towline when inspected under paragraphs

(a)(3)(iii) and (iv) of this section. Once this record lapses for three months or more, except when a vessel is laid up or out of service or has not deployed its towline, the owner, master, or operator shall retest the towline or remove it from service.

(b) *Terminal gear.* The owner, master, or operator of each vessel towing astern shall ensure that the gear used to control, protect, and connect each towline meets the following criteria:

(1) The material and size of the terminal gear are appropriate for the strength and anticipated loading of the towline and for the environment;

(2) Each connection is secured by at least one nut with at least one cotter pin or other means of preventing its failure;

(3) The lead of the towline is appropriate to prevent sharp bends in the towline from fairlead blocks, chocks, or tackle;

(4) There is provided a method, whether mechanical or non-mechanical, that does not endanger operating personnel but that easily releases the towline;

(5) The towline is protected from abrasion or chafing by chafing gear, lagging, or other means;

(6) Except on board a vessel towing in ice on Western Rivers or one using a towline of synthetic or natural fiber, there is fitted a winch that evenly spools and tightly winds the towline; and

(7) If a winch is fitted, there is attached to the main drum a brake that has holding power appropriate for the horsepower or bollard pull of the vessel and can be operated without power to the winch.

[CGD 94–020, 61 FR 35074, July 3, 1996]

§164.76 Towline and terminal gear for towing alongside and pushing ahead.

The owner, master, or operator of each vessel towing alongside or pushing ahead shall ensure that the face wires, spring lines, and push gear used—

(a) Are appropriate for the vessel's horsepower;

(b) Are appropriate for the arrangement of the tow;

(c) Are frequently inspected; and

(d) Remain serviceable.

[CGD 94–020, 61 FR 35075, July 3, 1996]

§164.78 Navigation under way: Towing vessels.

(a) The owner, master, or operator of each vessel towing shall ensure that each person directing and controlling the movement of the vessel—

(1) Understands the arrangement of the tow and the effects of maneuvering on the vessel towing and on the vessel, barge, or object being towed;

(2) Can fix the position of the vessel using installed navigational equipment, aids to navigation, geographic reference-points, and hydrographic contours;

(3) Does not fix the position of the vessel using buoys alone (Buoys are aids to navigation placed in approximate positions either to alert mariners to hazards to navigation or to indicate the orientation of a channel. They may not maintain exact charted positions, because strong or varying currents, heavy seas, ice, and collisions with vessels can move or sink them or set them adrift. Although they may corroborate a position fixed by other means, they cannot fix a position; however, if no other aids are available, buoys alone may establish an estimated position.);

(4) Evaluates the danger of each closing visual or radar contact;

(5) Knows and applies the variation and deviation, where a magnetic compass is fitted and where charts or maps have enough detail to enable this type of correction;

(6) Knows the speed and direction of the current, set, drift, and tidal state for the area to be transited; and

(7) Proceeds at a speed prudent for the weather, visibility, traffic density, tow draft, possibility of wake damage, speed of the current, and local speed-limits.

(b) The owner, master, or operator of each vessel towing shall ensure that the tests and inspections required by §164.80 are conducted and that the results are entered in the log or other record carried on board.

[CGD 94–020, 61 FR 35075, July 3, 1996]

§ 164.80 Tests and inspections.

(a) The owner, master, or operator of each towing vessel of less than 1,600 GT shall ensure that the following tests and inspections of gear occur before the vessel embarks on a voyage of more than 24 hours or when each new master or operator assumes command:

(1) *Steering-systems.* A test of the steering-gear-control system; a test of the main steering gear from the alternative power supply, if installed; a verification of the rudder-angle indicator relative to the actual position of the rudder; and a visual inspection of the steering gear and its linkage.

(2) *Navigational equipment.* A test of all installed navigational equipment.

(3) *Communications.* Operation of all internal vessel control communications and vessel-control alarms, if installed.

(4) *Lights.* Operation of all navigational lights and all searchlights.

(5) *Terminal gear.* Visual inspection of tackle; of connections of bridle and towing pendant, if applicable; of chafing gear; and of the winch brake, if installed.

(6) *Propulsion systems.* Visual inspection of the spaces for main propulsion machinery, of machinery, and of devices for monitoring machinery.

(b) The owner, master, or operator of each towing vessel of 1,600 GT or more shall ensure that the following tests of equipment occur at the frequency required by § 164.25 and that the following inspections of gear occur before the vessel embarks on a voyage of more than 24 hours or when each new master or operator assumes command:

(1) *Navigational equipment.* Tests of onboard equipment as required by § 164.25.

(2) *Terminal gear.* Visual inspection of tackle; of connections of bridle and towing pendant, if applicable; of chafing gear; and of the winch brake, if installed.

[CGD 94–020, 61 FR 35075, July 3, 1996]

§ 164.82 Maintenance, failure, and reporting.

(a) *Maintenance.* The owner, master, or operator of each towing vessel shall maintain operative the navigational-safety equipment required by § 164.72.

(b) *Failure.* If any of the navigational-safety equipment required by § 164.72 fails during a voyage, the owner, master, or operator of the towing vessel shall exercise due diligence to repair it at the earliest practicable time. He or she shall enter its failure in the log or other record carried on board. The failure of equipment, in itself, does not constitute a violation of this rule; nor does it constitute unseaworthiness; nor does it obligate an owner, master, or operator to moor or anchor the vessel. However, the owner, master, or operator shall consider the state of the equipment—along with such factors as weather, visibility, traffic, and the dictates of good seamanship—in deciding whether it is safe for the vessel to proceed.

(c) *Reporting.* The owner, master, or operator of each towing vessel whose equipment is inoperative or otherwise impaired while the vessel is operating within a Vessel Traffic Service (VTS) Area shall report the fact as required by 33 CFR 161.124. (33 CFR 161.124 requires that each user of a VTS report to the Vessel Traffic Center as soon as practicable:

(1) Any absence or malfunction of vessel-operating equipment for navigational safety, such as propulsion machinery, steering gear, radar, gyrocompass, echo depth-sounding or other sounding device, automatic dependent surveillance equipment, or navigational lighting;

(2) Any condition on board the vessel likely to impair navigation, such as shortage of personnel or lack of current nautical charts or maps, or publications; and

(3) Any characteristics of the vessel that affect or restrict the maneuverability of the vessel, such as arrangement of cargo, trim, loaded condition, under-keel clearance, and speed.)

(d) *Deviation and authorization.* The owner, master, or operator of each towing vessel unable to repair within 96 hours an inoperative marine radar required by § 164.72(a) shall so notify the Captain of the Port (COTP) and shall seek from the COTP both a deviation from the requirements of this section and an authorization for continued operation in the area to be transited.

Failure of redundant navigational-safety equipment, including but not limited to failure of one of two installed radars, where each satisfies §164.72(a), does not necessitate either a deviation or an authorization.

(1) The initial notice and request for a deviation and an authorization may be spoken, but the request must also be written. The written request must explain why immediate repair is impracticable, and state when and by whom the repair will be made.

(2) The COTP, upon receiving even a spoken request, may grant a deviation and an authorization from any of the provisions of §§164.70 through 164.82 for a specified time if he or she decides that they would not impair the safe navigation of the vessel under anticipated conditions.

[CGD 94–020, 61 FR 35075, July 3, 1996]

PART 165—REGULATED NAVIGATION AREAS AND LIMITED ACCESS AREAS

Subpart A—General

Sec.
165.1 Purpose of part.
165.5 Establishment procedures.
165.7 Notification.
165.8 Geographic coordinates.

Subpart B—Regulated Navigation Areas

165.10 Regulated navigation areas.
165.11 Vessel operating requirements (regulations).
165.13 General regulations.

Subpart C—Safety Zones

165.20 Safety zones.
165.23 General regulations

Subpart D—Security Zones

165.30 Security zones.
165.33 General regulations.

Subpart E—Restricted Waterfront Areas

165.40 Restricted waterfront areas.

Subpart F—Specific Regulated Navigation Areas and Limited Access Areas

FIRST COAST GUARD DISTRICT

165.100 Regulated Navigation Area: Navigable waters within the First Coast Guard District.
165.101 Kittery, Maine—regulated navigation area.
165.102 Security Zone: Walkers Point, Kennebunkport, ME.
165.103 Safety Zone: Portsmouth Harbor, Portsmouth, New Hampshire.
165.110 Boston Harbor, Boston, Massachusetts.
165.111 Safety Zone: Boston Harbor, Boston, Massachusetts.
165.112 Safety Zone: USS CASSIN YOUNG, Boston, Massachusetts.
165.113 Security Zone: Dignitary arrival/departure Logan International Airport, Boston, MA.
165.120 Safety Zone: Chelsea River, Boston Inner Harbor, Boston, MA.
165.121 Safety Zone: Rhode Island Sound, Narragansett Bay, Providence River.
165.122 Providence River, Providence, R.I. regulated navigation area.
165.130 Sandy Hook Bay, New Jersey—security zone.
165.140 New London Harbor, Connecticut—security zone.
165.141 Safety Zone: Sunken vessel EMPIRE KNIGHT, Boon Island, ME.
165.150 New Haven Harbor, Quinnipiac River, Mill River.
165.155 Northville Industries Offshore Platform, Riverhead, Long Island, New York—safety zone.
165.160 New York, New Jersey, Sandy Hook Channel, Raritan Bay, Arthur Kill—safety zone.
165.161 Safety Zone; Annual ''Fireworks on the Navesink'' Fireworks Display, Navesink River, Red Bank, New Jersey.
165.162 Safety Zone: New York Super Boat Race, Hudson River, New York.
165.163 Safety Zones; Port of New York/New Jersey Fleet Week.
165.164 Security Zones; Dignitary Arrival/Departure New York, NY.
165.165 Regulated Navigation Area; Kill Van Kull Channel, Newark Bay Channel, South Elizabeth Channel, Elizabeth Channel, Port Newark Channel and New Jersey Pierhead Channel, New York and New Jersey.
165.166 Safety Zone; Annual Burlington Independence Day Celebration Fireworks Display, Burlington Bay, Vermont.
165.167 Safety Zone; Annual Rensselaer Festival Fireworks Display, Hudson River, New York.
165.170 Safety Zone; Annual Heritage of Pride Fireworks Display, Hudson River, New York.
165.174 Safety Zone; Annual South Street Seaport New Year's Eve Fireworks Display, East River, New York.
165.175 Safety Zone; Annual South Street Seaport Memorial Day Fireworks Display, East River, New York.

165.178 Safety Zone; Annual North Hempstead Memorial Day Fireworks Display, Hempstead Harbor, New York.

FIFTH COAST GUARD DISTRICT

165.501 Chesapeake Bay entrance and Hampton Roads, Va. and adjacent waters—regulated navigation area.
165.502 Cove Point, Chesapeake Bay, Maryland—safety zone.
165.504 Newport News Shipbuilding and Dry Dock Company Shipyard, James River, Newport News, Va.
165.510 Delaware Bay and River, Salem River, Christina River and Schuylkill River–Regulated Navigation Area.
165.514 Safety Zone: Atlantic Intracoastal Waterway and connecting waters, vicinity of Marine Corps Base Camp Lejeune, North Carolina.
165.515 Safety Zone: Cape Fear River, Wilmington, North Carolina.
165.530 Safety Zone: Cape Fear and Northeast Cape Fear Rivers, NC.

SEVENTH COAST GUARD DISTRICT

165.701 Vicinity, Kennedy Space Center, Merritt Island, Florida—security zone.
165.703 Tampa Bay, Florida—Safety Zone.
165.704 Tampa Bay, Florida, Safety Zone.
165.T0704 Safety Zone: Savannah River, Savannah, Georgia.
165.705 Port Canaveral Harbor, Cape Canaveral, Florida.
165.708 Safety/Security Zone; Charleston Harbor and Cooper River, Charleston, SC.
165.711 Safety Zone: Port Everglades, Fort Lauderdale, FL.
165.713 Safety Zone, Ashley River, Charleston, South Carolina.
165.T07–013 Security Zone: Internal waters and territorial seas adjacent to the Florida peninsula.
165.714 Regulated Navigation Area; Atlantic Ocean, Charleston, SC.
165.720 Safety/Security Zone: St. Johns River, Jacksonville, FL.
165.721 Safety Zone: St. Johns River, Jacksonville, FL.
165.722 Security Zone: St. Johns River, Jacksonville, Florida.
165.726 Regulated Navigation Areas; Miami River, Miami, Florida.
165.728 Jacksonville, Florida—safety zones.
165.729 Jacksonville Harbor, Florida—security zone.
165.730 King's Bay, Georgia—Regulated navigation area.
165.731 Safety/Security Zone: Cumberland Sound, Georgia and St. Marys River Entrance Channel.
165.735 Brunswick, Georgia, Turtle River, Vicinity of Sydney Lanier Bridge.
165.752 Sparkman Channel, Tampa, Florida—regulated navigation area.
165.753 Regulated navigation area; Tampa Bay, Florida.
165.754 Safety Zone: San Juan Harbor, San Juan, PR.

EIGHTH COAST GUARD DISTRICT

165.802 Lower Mississippi River, vicinity of Old River Control Structure—Safety Zone.
165.803 Mississippi River—regulated navigation area.
165.804 Snake Island, Texas City, Texas; mooring and fleeting of vessels—safety zone.
165.805 Calcasieu Channel and Industrial Canal, Calcasieu River, Lake Charles, LA.
165.806 Sabine Neches Waterway, Texas—regulated navigation area.
165.807 Calcasieu River, Louisiana—regulated navigation area.
165.808 Corpus Christi Ship Channel, Corpus Christi, TX, safety zone.
165.810 Mississippi River, LA-regulated navigation area.
165.811 Atchafalaya River, Berwick Bay, LA–regulated navigation area.
165.815 Ohio River at Louisville, KY; regulated navigation area.
165.817 Arkansas River, Mile 118.2 to 125.4, Little Rock Arkansas—regulated navigation area.
165.819 Monongahela River, Mile 81.0 to 83.0—regulated navigation area.
165.821 Ohio River at Cincinnati, OH; regulated navigation area.

NINTH COAST GUARD DISTRICT

165.901 Great Lakes—regulated navigation areas.
165.902 Niagara River at Niagara Falls, New York—safety zone.
165.903 Safety Zones: Cuyahoga River and Old River, Cleveland, OH.
165.904 Lake Michigan at Chicago Harbor & Burnham Park Harbor—Safety and Security Zone.
165.905 USX Superfund Site Safety Zones: St. Louis River.
165.906 Lakeside Yacht Club in Cleveland Harbor, Cleveland, OH—regulated navigation areas.

ELEVENTH COAST GUARD DISTRICT

165.1101 Safety Zone: San Pedro Bay, CA.
165.1102 Security Zone: San Diego Bay, California.
165.1103 Security Zone: San Diego Bay, California.
165.1104 Security Zone: San Diego Bay, California.
165.1105 Security Zone: San Diego Bay, California.
165.1106 Security Zone: San Diego Bay, California.
165.1107 San Diego Bay, California—safety zone.
165.1108 San Diego Bay, California.

165.1109 San Pedro Bay, California—Regulated navigation area.
165.1110 Safety Zone: Los Angeles Harbor; San Pedro Bay, CA.
165.1111 Security Zone: Wilson Cove, San Clemente Island, California.
165.1114 San Francisco Bay Region, California—regulated navigation area.

THIRTEENTH COAST GUARD DISTRICT

165.1115 Safety/Security Zone: San Francisco Bay, San Pablo Bay, Carquinez Strait, and Suisun Bay, CA.
165.1116 Copper Canyon, Lake Havasu, Colorado River—Regulated Navigation Area.
165.1301 Puget Sound and Adjacent Waters in Northwestern Washington—Regulated Navigation Area.
165.1302 Bangor Naval Submarine Base, Bangor, WA.
165.1303 Puget Sound and adjacent waters, WA–regulated navigation area.
165.1304 Bellingham Bay, Bellingham, WA.
165.1305 Commencement Bay, Tacoma, WA.
165.1306 Lake Union, Seattle, WA.
165.1307 Elliott Bay, Seattle, WA.
165.1308 Columbia River, Vancouver WA.

FOURTEENTH COAST GUARD DISTRICT

165.1310 Strait of Juan de Fuca and adjacent coastal waters of Northwest Washington; Makah Whale Hunting—Regulated Navigation Area.
165.1401 Apra Harbor, Guam—safety zones.
165.1402 Apra Outer Harbor, Guam—regulated navigation area.
165.1403 Security Zone: Tinian, Commonwealth Northern Marianas Islands.
165.1404 Apra Harbor, Guam—security zone.
165.1406 Safety Zone: Pacific Missile Range Facility (PMRF), Barking Sands, Island of Kauai, Hawaii.

SEVENTEENTH COAST GUARD DISTRICT

165.1701 Port Valdez, Valdez, Alaska—safety zone.
165.1702 Gastineau Channel, Juneau, Alaska—safety zone.
165.1703 Ammunition Island, Port Valdez, Alaska.
165.1704 Prince William Sound, Alaska-regulated navigation area.
165.1706 Gastineau Channel, Juneau, Alaska—Safety Zone.
165.1707 Crescent Harbor, Sitka, Alaska-Safety Zone.
165.1708 Tongass Narrows, Ketchikan, Alaska—Safety Zone.

AUTHORITY: 33 U.S.C. 1231; 50 U.S.C. 191, 33 CFR 1.05–1(g), 6.04–1, 6.04–6, 160.5; 49 CFR 1.46.

SOURCE: CGD 79–034, 47 FR 29660, July 8, 1982, unless otherwise noted.

Subpart A—General

§165.1 Purpose of part.

The purpose of this part is to:

(a) Prescribe procedures for establishing different types of limited or controlled access areas and regulated navigation areas;

(b) Prescribe general regulations for different types of limited or controlled access areas and regulated navigation areas;

(c) Prescribe specific requirements for established areas; and

(d) List specific areas and their boundaries.

§165.5 Establishment procedures.

(a) A safety zone, security zone, or regulated navigation area may be established on the initiative of any authorized Coast Guard official.

(b) Any person may request that a safety zone, security zone, or regulated navigation area be established. Except as provided in paragraph (c) of this section, each request must be submitted in writing to either the Captain of the Port or District Commander having jurisdiction over the location as described in Part 3 of this chapter, and include the following:

(1) The name of the person submitting the request;

(2) The location and boundaries of the safety zone, security zone, or regulated navigation area;

(3) The date, time, and duration that the safety zone, security zone, or regulated navigation area should be established;

(4) A description of the activities planned for the safety zone, security zone, or regulated navigation area;

(5) The nature of the restrictions or conditions desired; and

(6) The reason why the safety zone, security zone, or regulated navigation area is necessary.

(Requests for safety zones, security zones, and regulated navigation areas are approved by the Office of Management and Budget under control number 2115–0076, 2115–0219, and 2115–0087).

(c) Safety Zones and Security Zones. If, for good cause, the request for a safety zone or security zone is made less than 5 working days before the zone is to be established, the request

may be made orally, but it must be followed by a written request within 24 hours.

[CGD 79–034, 47 FR 29660, July 8, 1982, as amended by CGD 79–026, 48 FR 35408, Aug. 4, 1983]

§ 165.7 Notification.

(a) The establishment of these limited access areas and regulated navigation areas is considered rulemaking. The procedures used to notify persons of the establishment of these areas vary depending upon the circumstances and emergency conditions. Notification may be made by marine broadcasts, local notice to mariners, local news media, distribution in leaflet form, and on-scene oral notice, as well as publication in the FEDERAL REGISTER.

(b) Notification normally contains the physical boundaries of the area, the reasons for the rule, its estimated duration, and the method of obtaining authorization to enter the area, if applicable, and special navigational rules, if applicable.

(c) Notification of the termination of the rule is usually made in the same form as the notification of its establishment.

§ 165.8 Geographic coordinates.

Geographic coordinates expressed in terms of latitude or longitude, or both, are not intended for plotting on maps or charts whose referenced horizontal datum is the North American Datum of 1983 (NAD 83), unless such geographic coordinates are expressly labeled NAD 83. Geographic coordinates without the NAD 83 reference may be plotted on maps or charts referenced to NAD 83 only after application of the appropriate corrections that are published on the particular map or chart being used.

[CGD 86–082, 52 FR 33811, Sept. 8, 1987]

Subpart B—Regulated Navigation Areas

§ 165.10 Regulated navigation areas.

A regulated navigation area is a water area within a defined boundary for which regulations for vessels navigating within the area have been established under this part.

§ 165.11 Vessel operating requirements (regulations).

Each District Commander may control vessel traffic in an area which is determined to have hazardous conditions, by issuing regulations:

(a) Specifying times of vessel entry, movement, or departure to, from, within, or through ports, harbors, or other waters;

(b) Establishing vessel size, speed, draft limitations, and operating conditions; and

(c) Restricting vessel operation, in a hazardous area or under hazardous conditions, to vessels which have particular operating characteristics or capabilities which are considered necessary for safe operation under the circumstances.

[CGD 79–026, 48 FR 35408, Aug. 4, 1983]

§ 165.13 General regulations.

(a) The master of a vessel in a regulated navigation area shall operate the vessel in accordance with the regulations contained in Subpart F.

(b) No person may cause or authorize the operation of a vessel in a regulated navigation area contrary to the regulations in this part.

Subpart C—Safety Zones

§ 165.20 Safety zones.

A Safety Zone is a water area, shore area, or water and shore area to which, for safety or environmental purposes, access is limited to authorized persons, vehicles, or vessels. It may be stationary and described by fixed limits or it may be described as a zone around a vessel in motion.

§ 165.23 General regulations.

Unless otherwise provided in this part:

(a) No person may enter a safety zone unless authorized by the COTP or the District Commander;

(b) No person may bring or cause to be brought into a safety zone any vehicle, vessel, or object unless authorized by the COTP or the District Commander;

(c) No person may remain in a safety zone or allow any vehicle, vessel, or object to remain in a safety zone unless

authorized by the COTP or the District Commander; and

(d) Each person in a safety zone who has notice of a lawful order or direction shall obey the order or direction of the COTP or District Commander issued to carry out the purposes of this subpart.

Subpart D—Security Zones

§165.30 Security zones.

(a) A security zone is an area of land, water, or land and water which is so designated by the Captain of the Port or District Commander for such time as is necessary to prevent damage or injury to any vessel or waterfront facility, to safeguard ports, harbors, territories, or waters of the United States or to secure the observance of the rights and obligations of the United States.

(b) The purpose of a security zone is to safeguard from destruction, loss, or injury from sabotage or other subversive acts, accidents, or other causes of a similar nature:

(1) Vessels,

(2) Harbors,

(3) Ports, and

(4) Waterfront facilities:

in the United States and all territory and water, continental or insular, that is subject to the jurisdiction of the United States.

§165.33 General regulations.

Unless otherwise provided in the special regulations in Subpart F of this part:

(a) No person or vessel may enter or remain in a security zone without the permission of the Captain of the Port;

(b) Each person and vessel in a security zone shall obey any direction or order of the Captain of the Port;

(c) The Captain of the Port may take possession and control of any vessel in the security zone;

(d) The Captain of the Port may remove any person, vessel, article, or thing from a security zone;

(e) No person may board, or take or place any article or thing on board, any vessel in a security zone without the permission of the Captain of the Port; and

(f) No person may take or place any article or thing upon any waterfront facility in a security zone without the permission of the Captain of the Port.

Subpart E—Restricted Waterfront Areas

§165.40 Restricted waterfront areas.

The Commandant, may direct the COTP to prevent access to waterfront facilities, and port and harbor areas, including vessels and harbor craft therein. This section may apply to persons who do not possess the credentials outlined in §125.09 of this chapter when certain shipping activities are conducted that are outlined in §125.15 of this chapter.

Subpart F—Specific Regulated Navigation Areas and Limited Access Areas

FIRST COAST GUARD DISTRICT

§165.100 Regulated Navigation Area: Navigable waters within the First Coast Guard District.

(a) *Regulated navigation area.* All navigable waters of the United States, as that term is used in 33 CFR 2.05–25(a), within the geographic boundaries of the First Coast Guard District, as defined in 33 CFR 3.05–1(b).

(b) *Definitions.* Terms used in this section have the same meaning as those found in 33 CFR 157.03. Single-hull identifies any tank barge that is not a double-hull tank barge.

(c) *Applicability.* This section applies to primary towing vessels engaged in towing tank barges carrying petroleum oil in bulk as cargo in the regulated navigation area, or as authorized by the District Commander.

(d) *Regulations*—(1) *Positive control for barges.* (i) Except as provided in paragraph (d)(1)(iii) of this section, each single-hull tank barge, unless being towed by a primary towing vessel with twin-screw propulsion and with a separate system for power to each screw, must be accompanied by an escort or assist tug of sufficient capability to promptly push or tow the tank barge away from danger of grounding or collision in the event of—

(A) A propulsion failure;

(B) A parted towing line;

(C) A loss of tow;

(D) A fire;

(E) Grounding;

(F) A loss of steering; or

(G) Any other casualty that affects the navigation or seaworthiness of either vessel.

(ii) Double-hull tank barges are exempt from paragraph (d)(1)(i) of this section.

(iii) The cognizant Captain of the Port (COTP), upon written application, may authorize an exemption from the requirements of paragraph (d)(1)(i) of this section for—

(A) Any tank barge with a capacity of less than 25,000 barrels, operating in an area with limited depth or width such as a creek or small river; or

(B) Any tank barge operating on any waters within the COTP Zone, until July 1, 2000, provided the operator demonstrates to the satisfaction of the COTP that the barge employs an equivalent level of safety to that provided by the positive control provisions of this section. Each request for an exemption under this paragraph (d)(1)(iii)(B) must be submitted in writing to the cognizant COTP no later than 7 days before the intended transit.

(iv) The operator of a towing vessel engaged in towing any tank barge must immediately call for an escort or assist tug to render assistance in the event of any of the occurrences identified in paragraph (d)(1)(i) of this section.

(2) *Enhanced communications.* Each vessel engaged in towing a tank barge must communicate by radio on marine band or Very High Frequency (VHF) channel 13 or 16, and issue securité calls on marine band or VHF channel 13 or 16, upon approach to the following places:

(i) Execution Rocks Light (USCG Light List No. [LLNR] 21440).

(ii) Matinecock Point Shoal Buoy (LLNR 21420).

(iii) 32A Buoy (LLNR 21380).

(iv) Cable and Anchor Reef Buoy (LLNR 21330).

(v) Stratford Middle Ground Light (LLNR 21260).

(vi) Old Field Point Light (LLNR 21275).

(vii) Approach to Stratford Point from the south (NOAA Chart 12370).

(viii) Falkner Island Light (LLNR 21170).

(ix) TE Buoy (LLNR 21160).

(x) CF Buoy (LLNR 21140).

(xi) PI Buoy (LLNR 21080).

(xii) Race Rock Light (LLNR 19815).

(xiii) Valiant Rock Buoy (LLNR 19825).

(xiv) Approach to Point Judith in vicinity of Block Island ferry route.

(xv) Buzzards Bay Entrance Light (LLNR 630).

(xvi) Buzzards Bay Midchannel Lighted Buoy (LLNR 16055)

(xvii) Cleveland East Ledge Light (LLNR 16085).

(xviii) Hog Island buoys 1 (LLNR 16130) and 2 (LLNR 16135).

(xix) Approach to the Bourne Bridge.

(xx) Approach to the Sagamore Bridge.

(xxi) Approach to the eastern entrance of Cape Cod Canal.

(3) *Voyage planning.* (i) Each owner or operator of a towing vessel employed to tow a tank barge shall prepare a written voyage plan for each transit of the tank barge.

(ii) The watch officer is authorized to make modifications to the plan and validate it as necessary.

(iii) Except as provided in paragraph (d)(3)(iv) of this section, each voyage plan must contain:

(A) A description of the type, volume, and grade of cargo.

(B) Applicable information from nautical charts and publications, including Coast Pilot, Coast Guard Light List, and Coast Guard Local Notice to Mariners, for the destination(s).

(C) Current and forecasted weather, including visibility, wind, and sea state for the destination(s).

(D) Data on tides and tidal currents for the destination(s).

(E) Forward and after drafts of the tank barge, and under-keel and vertical clearances for each port and berthing area.

(F) Pre-departure checklists.

(G) Calculated speed and estimated times of arrival at proposed waypoints.

(H) Communication contacts at Vessel Traffic Service (VTS) (if applicable), bridges, and facilities, and port-specific requirements for VHF radio.

(I) The master's standing orders detailing closest points of approach, special conditions, and critical maneuvers.

(iv) Each owner or operator of a tank barge on an intra-port transit of not more than four hours may prepare a voyage plan that contains:

(A) The information described in paragraphs (d)(3)(iii)(D) and (E) of this section.

(B) Current weather conditions including visibility, wind, and sea state. This information may be entered in either the voyage plan or towing vessel's log book.

(C) The channels of VHF radio to monitor.

(D) Other considerations such as availability of pilot, assist tug, berth, and line-handlers, depth of berth at mean low water, danger areas, and securité calls.

(4) *Navigation restriction areas.* Unless authorized by the cognizant COTP, no tank barge may operate in—

(i) The waters of Cape Cod Bay south of latitude 42° 5′ North and east of longitude 70° 25′ West; or

(ii) The waters of Fishers Island Sound east of longitude 72° 2′ West, and west of longitude 71° 55′ West.

(e) In addition to the authority for this part 165, this section is also authorized under authority of section 311, Pub. L. 105–383.

[CGD1–98–151, 63 FR 71770, Dec. 30, 1998, as amended by CGD01–98–151, 64 FR 12749, Mar. 15, 1999; USCG–1999–5832, 64 FR 34715, June 29, 1999]

§ 165.101 Kittery, Maine—regulated navigation area.

(a) The following is a regulated navigation area—Waters within the boundaries of a line beginning at 43°04′ 50′ ′N, 70°44′ 52′ ′W; then to 43°04′ 52′ ′N, 70°44′ 53′ ′W; then to 43°04′ 59′ ′N, 70°44′ 46′ ′W; then to 43°05′ 05′ ′N, 70°44′ 32′ ′W; then to 43°05′ 03′ ′N, 70°44′ 30′ ′W; then to the beginning point.

(b) Regulations—No vessel may operate in this area at a speed in excess of five miles per hour.

§ 165.102 Security Zone: Walkers Point, Kennebunkport ME.

(a) *Location.* The following area is a security zone: From point of land located on Cape Arundel at latitude 43° 20.4′ North, Iongitude 070° 28.0′ West; thence to a point approximately 500 yards southwest of Walkers Point located at latitude 43° 20.2′ North, longitude 070° 27.9′ West; thence to a point located approximately 500 yards south of Walkers Point at latitude 43° 20.1′ North, longitude 070° 27.6′ West; thence to a point located approximately southeast of Walkers Point at latitude 43° 20.4′ North, longitude 070° 27.2′ West; thence to an unnamed point of land located at 43° 20.9′ North, longitude 070° 27.1′ West; thence along the shoreline of Walkers Point to the beginning point. The aforementioned offshore positions are approximated by white buoys marked in orange indicating an exclusionary area.

(b) *Regulations.* (1) In accordance with the general regulations in § 165.33 of this part, entry into this zone is prohibited unless authorized by the Captain of the Port, Portland, Maine. Section 165.33 also contained other general requirements.

(2) No person may swim upon or below the surface of the water within the boundaries of this security zone.

[CGDI 89–008, 54 FR 13883, Apr. 6, 1989]

§ 165.103 Safety Zone: Portsmouth Harbor, Portsmouth, New Hampshire.

(a) The following areas are established as safety zones during the specified conditions:

(1) For all inbound tank vessels carrying Liquified Petroleum Gas (LPG), the waters bounded by the limits of the Piscataqua River Channel and extending 1000 yards ahead and 500 yards astern of an LPG tanker while the vessel transits Bigelow Bight, Portsmouth Harbor and the Piscataqua River to the LPG receiving facility at Newington, New Hampshire. This safety zone remains in effect until the LPG carrier is safely moored at the LPG receiving facility on the Piscataqua River.

(2) For all outbound tank vessels carrying LPG, the waters bounded by the limits of the Piscataqua River Channel and extending 1000 yards ahead and 500 yards astern of an LPG tanker while the vessel departs the LPG facility and transits the Piscataqua River, Portsmouth Harbor and Bigelow Bight. This safety zone remains in effect until the

LPG carrier passes Gunboat Shoal Lighted Bell Buoy ''1'' (LLNR 185) located in Bigelow Bight.

(b) The general regulations governing safety zones contained in 33 CFR 165.23 apply.

(c) The Captain of the Port will notify the maritime community and local agencies of periods during which this safety zone will be in effect by providing advance notice of scheduled arrivals and departures of LPG vessels via the telephone and/or Marine Safety Information Radio Broadcasts.

[CGD 188–106, 54 FR 20572, May 12, 1989]

§ 165.110 Boston Harbor, Boston, Massachusetts.

(a) The following areas are established as safety zones during the specified conditions:

(1) The waters bounded by the limits of the Boston Main Ship Channel and extending two miles ahead and one mile astern of a loaded Liquified Natural Gas Tank vessel while the vessel transits the Boston North Channel and Boston Harbor. The safety Zone remains in effect until the LNG vessel is alongside the DISTRIGAS waterfront facility in the Mystic River. Lat. 42°23.3′ N., Long. 71°03.7′ W.

(2) The waters and land area within 150′ of a Liquified Natural Gas Tank vessel when the vessel is alongside the DISTRIGAS waterfront facility, Everett, MA. Lat. 42°23.3′ N., Long. 71°03.7′ W. This Safety Zone remains in effect while the LNG vessel remains in a loaded condition or is transferring liquified natural gas.

(b) The general regulations governing safety zones as contained in 33 CFR 165.20 apply.

[CGD1–83–4R, 49 FR 19819, May 10, 1984]

§ 165.111 Safety Zone: Boston Harbor, Boston, Massachusetts.

(a) The following areas are established as safety zones during the conditions specified:

(1) Around the U.S.S. *Constitution* or any accompanying parade vessels when *Constitution* is under way—300 yards in all directions in the waters around the U.S.S. *Constitution* and each parade vessel accompanying *Constitution* whenever the U.S.S. *Constitution* is underway in Boston Harbor from the time such vessels depart their respective berths until the time they complete their transit and are safely moored.

(2) Whenever *Constitution* is moored at Pier 1, Charlestown Navy Yard—the waters between Hoosac Pier and Pier 1, Charlestown Navy Yard, from the imaginary line connecting the outer easternmost point protruding into Boston Harbor from Hoosac Pier to the outer westernmost point protruding into Boston Harbor from Pier 1, Charlestown Navy Yard, extending inbound along the face of both piers to the landside points where both piers end.

(3) Around the U.S.S. *Constitution*—fifty yards in all directions in the waters around *Constitution* when the vessel is moored at any Boston berthing location other than Pier 1, Charlestown Navy Yard.

(b) The general regulations governing safety zones as contained in 33 CFR 165.23 apply.

[CGD1 91–109, 57 FR 30407, July 9, 1992]

§ 165.112 Safety Zone: USS CASSIN YOUNG, Boston, Massachusetts.

(a) *Location.* The following area is a safety zone:

Around the USS CASSIN YOUNG (DD–793) and any accompanying parade vessels when the USS CASSIN YOUNG is underway. The zone extends 100 yards in all directions in the waters around the USS CASSIN YOUNG and accompanying parade vessels whenever the USS CASSIN YOUNG is underway in Boston Harbor from the time the USS CASSIN YOUNG departs its berth until it is safely moored.

(b) *Regulations.* The general regulations governing safety zones as contained in 33 CFR 165.23 apply.

[CGD01–93–001, 58 FR 47991, Sept. 14, 1993]

§ 165.113 Security Zone: Dignitary arrival/departure Logan International Airport, Boston, MA

(a) *Location.* The permanent security zone consists of four sectors that may be activated in part, or in whole, upon the request of the U.S. Secret Service. These zones are for the protection of the President or Vice President of the United States, as well as visiting heads

of foreign states or foreign governments arriving at, or departing from, Logan International Airport and as determined by the transit route across Boston Harbor. The security zone will be as follows:

(1) Sector one will go into effect 15 minutes prior to the scheduled landing or takeoff of the aircraft carrying either the President, Vice President, or visiting heads of foreign states or foreign governments at Logan International Airport. Sector one will preclude all vessels from approaching within three hundred yards of the Logan International Airport shoreline, bound on the west by a line drawn between positions 42°22′45″ N., 071°01′05″ W. and 42°21′48″ N., 071°01′45″ W. (NAD) 1983).

(2) Sector two will go into effect 15 minutes before the vehicle carrying the President, Vice President, or visiting heads of foreign states or foreign governments enters the Callahan Tunnel or Sumner Tunnel. Sector two may preclude vessels, as necessary, from entering an area of the main ship channel, Boston Inner Harbor; fifty yards in all directions from a point directly above the Callahan Tunnel or Sumner Tunnel.

(3) Sector three will go into effect 15 minutes before the vehicle carrying the President, Vice President, or visiting heads of foreign states or foreign governments enters the Ted Williams Tunnel. Sector three may preclude vessels, as necessary, from entering an area of the main ship channel, Boston Inner Harbor, fifty yards in all directions from a point directly above the Ted Williams Tunnel.

(4) Sector four will go into effect 15 minutes before the President, Vice President, or visiting heads of foreign states or foreign governments board the designated transport vessel. Sector four will preclude all vessels from approaching within three hundred yards in all directions from the designated vessel transporting the President, Vice President, or visiting heads of foreign states or foreign governments between Logan International Airport and any location in Boston Harbor.

(5) The activation of a particular sector of this security zone will be announced via Safety Marine Information Broadcasts and/or by locally issued notices.

(b) *Regulations.* (1) The general regulations covering security zones contained in 33 CFR 165.33 apply.

(2) All persons and vessels shall comply with the instructions of the Coast Guard Captain of the Port or the designated on scene patrol personnel. Coast Guard patrol personnel include commissioned, warrant, and petty officers of the Coast Guard. Upon being hailed by a Coast Guard vessel via siren, radio, flashing light, or other means, the operator of a vessel shall proceed as directed.

[CGD01–97–004, 63 FR 16117, Apr. 2, 1998]

§ 165.120 Safety Zone: Chelsea River, Boston Inner Harbor, Boston, MA.

(a) *Location.* The following area is a safety zone: The waters of the Chelsea River, Boston Inner Harbor, for 100 yards upstream and downstream of the center of the Chelsea Street Draw span (in the approximate position of Latitude 42°33′10″N., Longitude 71°01′23″ W.).

(b) *Regulation.* The following standards are the minimum requirements for transit of the Safety Zone. Additional precautions may be taken by the pilot and/or person in charge (Master or Operator).

(1) All tankships greater than 1,000 Gross Tons shall be under the direction and control of the Licensed Federal Pilot. This does not relieve persons in charge (Masters or Operators) from their ultimate responsibility for the safe navigation of vessels.

(2) All vessel(s) speed shall be kept to a minimum considering all factors and the need for optimum vessel control.

(3) Restrictions on size and draft of vessels:

(i) No vessel greater than 661 feet in length (using length overall) or greater than 90.5 feet in beam (using extreme breadth) shall transit the Safety Zone.

(ii) No vessel greater than 630.5 feet in length or 85.5 feet or greater in beam shall transit the Safety Zone during the period between sunset and sunrise.

(iii) No tankship greater than 550.5 feet in length shall transit the Safety Zone, either inbound or outbound, with a draft less than 18.0 feet forward and 24.0 feet aft.

(4) Restrictions when the Chelsea River channel is obstructed by vessel(s) moored at the Northeast Petroleum Terminal located downstream of the Chelsea Street Bridge on the Chelsea, MA side of the Chelsea River—hereafter referred to as the Jenny Dock (approximate position 42°23′09″ N., 71°01′31″ W.)—or the Mobile Oil Terminal located on the East Boston Side of the Chelsea River downstream of the Chelsea Street Bridge (approximate position 42°23′05″ N., 71°01′31″ W.):

(i) When there is a vessel moored at each terminal, no vessel greater than 300.5 feet in length or greater than 60.5 feet in beam, shall transit the safety zone.

(ii) When a vessel with a beam greater than 60.5 feet is moored at either terminal, no vessel greater than 630.5 feet in length or greater than 85.5 feet in beam shall transit the Safety Zone.

(iii) When a vessel with a beam greater than 85.5 feet is moored at either terminal, no vessel greater than 550.5 feet in length or greater than 85.5 feet in beam shall transit the Safety Zone.

(5) Requirements for tug assistance:

(i) All tankships greater than 630.5 feet in length or greater than 85.5 feet in beam shall be assisted by at least four tugs of adequate horsepower.

(ii) All tankships from 450 feet in length up to and including 630.5 feet in length and less than 85.5 feet in beam shall be assisted by at least three tugs of adequate horsepower.

(iii) All tug/barge combinations with a tonnage of over 10,000 Gross Tons (for the barge(s), in all conditions of draft, shall be assisted by at least one tug of adequate horsepower.

(6) U.S. Certificated integrated tug/barge (ITB) combinations shall meet the requirements of a tankship of similar length and beam except that one less assist tug would be required.

(7) Variances from the above standard must be approved in advance by the Captain of the Port of Boston, MA.

[CCGD1–85–4R, 51 FR 10835, Mar. 31, 1986; 51 FR 23415, June 27, 1986, as amended by USCG–1998–3799, 63 FR 35532, June 30, 1998]

§ 165.121 Safety Zone: Rhode Island Sound, Narragansett Bay, Providence River.

(a) *Location.* The following areas are established as safety zones:

(1) For Liquefied Petroleum Gas (LPG) vessels while at anchor in the waters of Rhode Island Sound; in position Latitude 41°25′ N., Longitude 71°23′ W., a Safety Zone with a radius of one-half mile around the LPG vessel.

(2) For Liquefied Petroleum Gas (LPG) vessels while transitting Narragansett Bay and the Providence River; a moving Safety Zone from a distance of two (2) miles ahead to one (1) mile astern to the limits of the navigable channel around the LPG vessel.

(3) For Liquefied Petroleum Gas (LPG) vessels while moored at the LPG facility, Port of Providence; a safety zone within 50 feet around the vessel. No vessel shall moor within 200 feet from the LPG vessel. All vessels transiting the area are to proceed with caution to minimize the effects of wake around the LPG vessel.

(4) For Liquefied Petroleum Gas (LPG) vessels while moored with manifolds connected at the LPG Facility, Port of Providence; a Safety Zone within a 100 foot radius around the shoreside manifold while connected. This is in addition to the requirements for LPG vessels while moored at the LPG Facility, Port of Providence.

(b) The Captain of the Port Providence will notify the maritime community of periods during which this safety zone will be in effect by providing advance notice of scheduled arrivals and departures of LPG vessels via Marine Safety Information Radio Broadcast on VHF Marine Band Radio, Channel 22 (157.1 MHz).

(c) *Regulations.* The general regulations governing safety zones contained in § 165.23 apply.

[CGD1–88–010, 53 FR 31858, Aug. 22, 1988, as amended by CGD01–92–004, 59 FR 52425, Oct. 18, 1994; USCG–1998–3799, 63 FR 35532, June 30, 1998]

§165.122 Providence River, Providence, R.I. regulated navigation area.

(a) *Description of the regulated navigation area (RNA).* The Regulated Navigation Area (RNA) encompasses the deep draft channel between Narragansett Bay Entrance Lighted Horn Buoy NB (LLNR 17675) 41°23.0′ N Latitude, 71°23.4′ W Longitude, and Fox Point, Providence.

(b) *Regulations.* (1) The following restrictions apply in the portion of the regulated area between Conimicut Light (LLNR 18305) and Channel Light 42 (Fuller Rock Light, (LLNR 18580)).

(i) No vessel with a draft greater than 35 feet may transit when water depth is at or below mean low water.

(ii) Vessels with drafts greater than 35 feet but less than 38 feet may transit when water depth is other than that on or below mean low water, provided there is sufficient depth under the keel to prevent grounding.

(iii) Vessels with drafts greater than or equal to 38 feet must obtain permission, 48 hours in advance of the desired transit time, from the Captain of the Port, Providence to transit.

(2) Vessels with drafts greater than 35 feet must have at least one mile of visibility to transit the regulated area between Conimicut Light (LLNR 18305) and Channel Light 42 (LLNR 18580, Fuller Rock Light).

(3) Vessels over 65 feet in length are prohibited from passing, meeting, or overtaking other vessels over 65 feet in length in the regulated area from:

(i) Gaspee Point to Channel Light 42, (Fuller Rock Light, LLNR 18580).

(ii) Conimicut Point Reach (Conimicut Light, LLNR 18305) to Channel Lighted Buoy 19, 41° 43.7′ N Latitude, 71° 21.8′ W Longitude, (LLNR 18330) and Channel Lighted Buoy 20, 41° 43.7′ N Latitude, 71° 21.8′ W Longitude, (LLNR 18335).

(4) Vessels over 65 feet in length inbound for berths up the Providence River, planning to transit through the deep draft channel, are required to make Safety Signal (SECURITE) calls on both VHF channels 13 and 16 at the following geographic locations: Pilot's Station, Abeam of Castle Hill, Approaching the Newport bridge, South of Prudence Island, Abeam of Sandy Point, Abeam of Popasquash Point, Approaching the Southern End of Rumstick Neck Reach, Abeam of Conimicut Point Light (LLNR 18305), Abeam of Gaspee Point, Abeam of Sabin Point and upon mooring.

(5) Vessels over 65 feet in length outbound for sea down the Providence River Channel transiting through this regulated navigation area are required to make SECURITE calls on VHF channels 13 and 16 at the following geographic locations: one-half hour prior to departure from the berth, at departure from the berth, Abeam of Sabin Point, Abeam of Gaspee Point, and Abeam of Conimicut Light (LLNR 18305).

(6) Vessels 65 feet and under in length and all recreational vessels when meeting deep draft commercial vessel traffic in the Providence River Channel between Conimicut Light (LLNR 18305) and Channel Light 42 (LLNR 18580, Fuller Rock Light) shall keep out of the way of the oncoming deep draft commercial vessel.

(7) The Captain of the Port, Providence, may authorize a deviation from these regulations.

(c) *Enforcement.* Violations of this regulated navigation area should be reported to the Captain of the Port, Providence, at (401) 435–2300. Persons in violation of these regulations will be subject to civil penalty under §165.13(b) of this part.

[CGD01–93–030, 59 FR 18489, Apr. 19, 1994]

§165.130 Sandy Hook Bay, New Jersey—security zone.

(a) Naval Ammunition Depot Piers. The waters within the following boundaries are a security zone—A line beginning on the shore at 40°25′ 57′ ′N, 74°04′ 32′ ′W; then to 40°27′ 52.5′ ′N, 74°03′ 14.5′ ′W; then to 40°27′ 28.3′ ′N, 74°02′ 12.4′ ′W; then to 40°26′ 29.2′ ′N, 74°02′ 53′ ′W; then to 40°26′ 31.1′ ′N, 74°02′ 57.2′ ′W; then to 40°25′ 27.3′ ′N, 74°03′ 41′ ′W; then along the shoreline to the beginning point.

(b) Terminal Channel. The waters within the following boundaries are a security zone—A line beginning at 40°27′ 41.2′ ′N, 74°02′ 46′ ′W; then to 40°28′ 27′ ′N, 74°02′ 17.2′ ′W; then to 40°28′ 21.1′ ′N, 74°02′ 00′ ′W; then to 40°28′ 07.8′ ′N, 74°02′ 22′ ′W; then to 40°27′ 39.8′ ′N, 74°02′ 41.4′ ′W; then to to the beginning.

(c) The following rules apply to the security zone established in paragraph (b) of this section (Terminal Channel) instead of the rule in § 165.33(a):

(1) No vessel shall anchor, stop, remain or drift without power at anytime in the security zone.

(2) No vessel shall enter, cross, or otherwise navigate in the security zone when a public vessel, or any other vessel, that cannot safely navigate outside the Terminal Channel, is approaching or leaving the Naval Ammunition Depot Piers at Leonardo, New Jersey.

(3) Vessels may enter or cross the security zone, except as provided in paragraph (c)(2) of this section.

(4) No person may swim in the security zone.

[CGD 77–118a, 42 FR 35784, July 11, 1977. Redesignated by CGD 81–017, 46 FR 28154, May 26, 1981, and CGD 87–008b, 52 FR 25218, July 6, 1987]

§ 165.140 New London Harbor, Connecticut—security zone.

(a) Security zones:

(1) *Security zone A.* The waters of the Thames River west of the Electric Boat Division Shipyard enclosed by a line beginning at a point on the shoreline at 41°20′22.1″ N, 72°04′52.8″ W; then west to 41°20′28.7″ N, 72°05′03.5″ W; then to 41°20′53.3″ N, 72°05′6.6″ W; then to 41°21′03″ N, 72°05′06.7″ W; then due east to a point on the shoreline at 41°21′03″ N, 72°05′00″ W; then along the shoreline to the point of beginning.

(2) *Security zone B.* The waters of the Thames River, west of the Naval Submarine Base, New London, CT, enclosed by a line beginning at a point on the shoreline at 41°23′15.8″ N., 72°05′17.9″ W.; then to 41°23′15.8″ N., 72°05′22″ W.; then to 41°23′25.9″ N., 72°05′29.9″ W.; then to 41°23′33.8″ N., 72°05′34.7″ W.; then to 41°23′37.0″ N., 72°05′38.0″ W.; then to 41°23′41.0″ N., 72°05′40.3″ W.; then to 41°23′47.2″ N., 72°05′42.3″ W.; then to 41°23′53.8″ N., 72°05′43.7″ W.; then to 41°23′59.8″ N., 72°05′43.0″ W.; then to 41°24′12.4″ N., 72°05′43.2″ W.; then to a point on the shoreline at 41°24′14.4″ N., 72°05′38″ W.; then along the shoreline to the point of beginning.

(b) *Special regulation.* Section 165.33 does not apply to public vessels when operating in Security Zone A, or to vessels owned by, under hire to, or performing work for the Electric Boat Division when operating in Security Zone A.

[CGD 79–034, 47 FR 29660, July 8, 1982, as amended by COTP 83–01, 48 FR 33264, July 21, 1983; CGD3–83–29, 48 FR 51622, Nov. 10, 1983; CGD3–84–26, 49 FR 40405, Oct. 16, 1984; CGD3–86–56, 52 FR 17296, May 7, 1987. Redesignated by CGD 87–008b, 52 FR 25218, July 6, 1987; CDG3 86–56, 52 FR 44107, Nov. 18, 1987; CGD01–97–104, 62 FR 51782, Oct. 3, 1997]

§ 165.141 Safety Zone: Sunken vessel EMPIRE KNIGHT, Boon Island, ME.

(a) *Location.* The following area is a safety zone: All waters of the Atlantic Ocean within a 1,000 yard radius of the stern section of the sunken vessel EMPIRE KNIGHT, in approximate position 43°06′ 19″ N, 70°27′ 09″ W, (NAD 1983) and extending from the water's surface to the seabed floor.

(b) *Effective date.* This section is effective on August 23, 1996, twenty-four hours a day, seven days a week.

(c) *Regulations.* (1) The general regulations contained in 33 CFR 165.23 apply.

(2) All vessels and persons are prohibited from anchoring, diving, dredging, dumping, fishing, trawling, laying cable, or conducting salvage operations in this zone except as authorized by the Coast Guard Captain of the Port, Portland, Maine. Innocent transit through the area within the safety zone is not affected by this regulation and does not require the authorization of the Captain of the Port.

(3) All persons and vessels shall comply with the instructions of the COTP or the designated on scene patrol personnel. U.S. Coast Guard patrol personnel include commissioned, warrant, and petty officers of the Coast Guard. Upon being hailed by a U.S. Coast Guard vessel via siren, radio, flashing light, or other means, the operator of a vessel shall proceed as directed.

[CGD 01–95–141, 61 FR 60032, Nov. 26, 1996]

§ 165.150 New Haven Harbor, Quinnipiac River, Mill River.

(a) *The following is a regulated navigation area:* The waters surrounding the Tomlinson Bridge located within a line extending from a point A at the southeast corner of the Wyatt terminal dock at 41°17′ 50′ ′N, 72°54′ 36′ ′W thence along

a line 126°T to point B at the southwest corner of the Gulf facility at 41°17′ 42′ ′N, 72°54′ 21′ ′W thence north along the shoreline to point C at the northwest corner of the Texaco terminal dock 41°17′ 57′ ′N, 72°54′ 06′ ′W thence along a line 303°T to point D at the west bank of the mouth of the Mill River 41°18′ 05′ ′N, 72°54′ 23′ ′W thence south along the shoreline to point A.

(b) *Regulations.* (1) No person may operate a vessel or tow a barge in this Regulated Navigation Area in violation of these regulations.

(2) Applicability. The regulations apply to barges with a freeboard greater than ten feet and to any vessel towing or pushing these barges on outbound transits of the Tomlinson Bridge.

(3) Regulated barges may not transit the bridge—

(i) During the period from one hour to five hours after high water slack,

(ii) When the wind speed at the bridge is greater than twenty knots, and

(iii) With the barge being towed on a hawser, stern first.

(4) Regulated barges with a beam greater than fifty feet must be pushed ahead through the bridge.

(5) If the tug operator does not have a clear view over the barge when pushing ahead, the operator shall post a lookout on the barge with a means of communication with the operator.

(6) Regulated barges departing the Mill River may transit the bridge only between sunrise and sunset. Barges must be pushed ahead of the tug, bow first, with a second tug standing by to assist at the bow.

(7) Nothing in this section is intended to relieve any person from complying with:

(i) Applicable Navigation and Pilot Rules for Inland Waters;

(ii) Any other laws or regulations;

(iii) Any order or direction of the Captain of the Port.

(8) The Captain of the Port, New Haven, may issue an authorization to deviate from any rule in this section if the COTP finds that an alternate operation can be done safely.

[CGD 79–034, 47 FR 29660, July 8, 1982, as amended by CGD 80–069, 47 FR 53368, Nov. 26, 1982. Redesignated by CGD 87–008b, 52 FR 25218, July 6, 1987]

§ 165.155 Northville Industries Offshore Platform, Riverhead, Long Island, New York— safety zone.

(a) The following area is established as a safety zone during the specified condition:

(1) The waters within a 500 yard radius of the Northville Industries Offshore Platform, Long Island, New York, 1 mile North of the Riverhead shoreline at 41°00″ N, 072°38″ W, while a Liquefied Petroleum Gas (LPG) vessel is moored at the Offshore Platform. The safety zone remains in effect until the LPG vessel departs the Offshore Platform.

(b) The general regulations governing safety zone contained in 33 CFR 165.23 apply.

(c) The Captain of the Port will notify the maritime community of periods during which this safety zone will be in effect by providing notice of scheduled moorings at the Northville Industries Offshore Platform of LPG vessels via Marine Safety Information Radio Broadcast.

[CGD3 85–86, 51 FR 37181, Oct. 20, 1986. Redesignated by CGD 87–008b, 52 FR 25218, July 6, 1987]

§ 165.160 New York, New Jersey, Sandy Hook Channel, Raritan Bay, Arthur Kill—safety zone.

(a) The following areas are established as safety zones during the specified conditions:

(1) For incoming tank vessels loaded with Liquefied Petroleum Gas, the waters within a 100 yard radius of the LPG carrier while the vessel transits the Sandy Hook Channel, Raritan Bay East and West Reach, Ward Point Bend East and West Reach, and the Arthur Kill to the LPG receiving facility. The Safety Zone remains in effect until the LPG vessel is moored at the LPG receiving facility in the Arthur Kill.

(2) For outgoing tank vessels loaded with LPG, the waters within a 100 yard

radius of the LPG carrier while the vessel departs the LPG facility and transits the Arthur Kill, Ward Point Bend West and East Reach, Raritan Bay West and East Reach, and Sandy Hook Channel. The safety zone remains in effect until the LPG vessel passes the Scotland Lighted Horn Buoy ''S'' (LLNR 1619) at the entrance to the Sandy Hook Channel.

(b) The general regulations governing safety zones contained in 33 CFR 165.23 apply.

(c) The Captain of the Port will notify the maritime community of periods during which this safety zone will be in effect by providing advance notice of scheduled arrivals and departures of loaded LPG vessels via a Marine Safety Information Radio Broadcast.

[CGD3 84–08, 49 FR 25447, June 21, 1984. Redesignated by CGD 87–008b, 52 FR 25218, July 6, 1987]

§ 165.161 Safety Zone; Annual "Fireworks on the Navesink" Fireworks Display, Navesink River, Red Bank, New Jersey.

(a) *Location.* All waters between the north and south shores of the Navesink River, including Red Bank Reach, extending approximately 300 yards east and 300 yards east and 300 yards west of the fireworks platform anchored off of Red Bank, New Jersey, at or near 40°21′ 20′ ′N latitude, 074°04′ 10′ ′W (NAD 1983). The safety zone is bound by the following points: 40°21′ 15′ ′N latitude, 074°03′ 57′ ′W longitude; to 40°21′ 43′ ′N latitude, 074°03′ 57′ ′W longitude; and 40°21′ 20′ ′N latitude, 074°04′ 25′ ′W longitude; to 40°21′ 30′ ′N latitude, 074°04′ 25′ ′W longitude (NAD 1983).

(b) *Effective period.* This section is in effect annually on the third of July, from 8 p.m. until 11 p.m., unless extended or terminated sooner by the Captain of the Port, New York. If the fireworks display is cancelled because of bad weather, this section is in effect on the fourth of July, at the same times, unless extended or terminated sooner by the Captain of the Port, New York. The effective period will be announced annually via Safety Marine Information Broadcasts and locally issued notices.

(c) *Regulations.* (1) The general regulations contained in 33 CFR 165.23 apply.

(2) All persons and vessels shall comply with the instructions of the Coast Guard Captain of the Port or the designated on scene patrol personnel. U.S. Coast Guard patrol personnel include commissioned, warrant, and petty officers of the Coast Guard. Upon being hailed by a U.S. Coast Guard vessel via siren, radio, flashing light, or other means, the operator of a vessel shall proceed as directed.

[CGD01–95–025, 60 FR 32271, June 21, 1995]

§ 165.162 Safety Zone: New York Super Boat Race, Hudson River, New York.

(a) *Regulated area.* The following area is a safety zone: All waters of the Lower Hudson River south of a line drawn from the northwest corner of Pier 76 in Manhattan to a point on the New Jersey shore in Weehawken, New Jersey at approximate position 40°45′52″N 074°01′01″W (NAD 1983) and north of a line connecting the following points (all coordinates are NAD 1983):

Latitude	Longitude
40°42′16.0″N	074°01′09.0″W, then south to
40°41′55.0″N	074°01′16.0″W, then west to
40°41′47.0″N	074°01′36.0″W, then northwest to
40°41′55.0″N	074°01′59.0″W, then to shore at
40°42′20.5″N	074°02′06.0″W.

(b) *Regulations.* (1) Vessels not participating in this event, swimmers, and personal watercraft of any nature are prohibited from entering or moving within the regulated area unless authorized by the Patrol Commander.

(2) All persons and vessels shall comply with the instructions of the Coast Guard Captain of the Port or the designed on-scene-patrol personnel. These personnel comprise commissioned, warrant, and petty officers of the Coast Guard. Upon being hailed by a U.S. Coast Guard vessel by siren, radio, flashing light, or other means, the operator of a vessel shall proceed as directed.

(c) *Effective period.* This section is in effect annually from 10 a.m. until 4

p.m. on the Sunday following Labor Day.

[CGD01–98–175, 64 FR 31984, June 15, 1999]

EFFECTIVE DATE NOTE: By CGD01–98–175, 64 FR 31984, June 15, 1999, § 165.162 was added, effective July 15, 1999.

§ 165.163 Safety Zones; Port of New York/New Jersey Fleet Week.

(a) The following areas are established as safety zones:

(1) Safety Zone A—(i) *Location.* A moving safety zone for the Parade of Ships including all waters 500 yards ahead and astern, and 200 yards of each side of the designated column of parade vessels as it transits the Port of New York and New Jersey from the Verrazano Narrows Bridge to Riverside State Park on the Hudson River between West 137th and West 144th Streets, Manhattan.

(ii) *Enforcement period.* Paragraph (a)(1)(i) of this section is enforced annually from 8 a.m. until 5 p.m. on the Wednesday before Memorial Day.

(2) *Safety Zone B*—(i) *Location.* A safety zone including all waters of the Hudson River between Piers 83 and 90, Manhattan, from the parade column east to the Manhattan shoreline.

(ii) *Enforcement period.* Paragraph (a)(2)(i) of this section is enforced annually from 8 a.m. until 5 p.m. on the Wednesday before Memorial Day.

(3) Safety Zone C—

(i) *Location.* A moving safety zone including all waters of the Hudson River within a 200-yard radius of each parade vessel upon its leaving the parade of ships until it is safely berthed.

(ii) *Enforcement period.* Paragraph (a)(3)(i) of this section is enforced annually from 8 a.m. until 5 p.m. on the Wednesday before Memorial Day.

(4) Safety Zone D—

(i) *Location.* A safety zone including all waters of the Hudson River bound by the following points: from the southeast corner of Pier 90, Manhattan, where it intersects the seawall, west to approximate position 40°46′10″N 074°00′13″W (NAD 1983), south to approximate position 40°45′54″N 074°00′25″W (NAD 1983), then east to the northeast corner of Pier 83 where it intersects the seawall.

(ii) *Enforcement period.* Paragraph (a)(4)(i) of this section is enforced annually from 10 a.m. until 5 p.m., from Friday through Monday, Memorial Day weekend.

(5) Safety Zone E—

(i) *Location.* A moving safety zone including all waters 500 yards ahead and astern, and 200 yards on each side of the departing U.S. Navy Aircraft or Helicopter Carrier as it transits the Port of New York and New Jersey from its mooring at the Intrepid Sea, Air and Space Museum, Manhattan, to the COLREGS Demarcation line at Ambrose Channel Entrance Lighted Bell Buoy 2 (LLNR 34805).

(ii) *Enforcement period.* Paragraph (a)(5)(i) of this section is enforced annually on the Wednesday following Memorial Day. Departure time is dependent on tide, weather, and granting of authority for departure by the Captain of the Port, New York.

(b) *Effective period.* This section is effective annually from 8 a.m. on the Wednesday before Memorial Day until 4 p.m. on the Wednesday following Memorial Day.

(c) *Regulations.* (1) The general regulations contained in 33 CFR 165.23 apply.

(2) All persons and vessels shall comply with the instructions of the Coast Guard Captain of the Port or the designated on-scene-patrol personnel. these personnel comprise commissioned, warrant, and petty officers of the Coast Guard. Upon being hailed by a U. S. Coast Guard vessel by siren, radio, flashing light, or other means, the operator of a vessel shall proceed as directed.

[CGD1–98–170, 64 FR 24946, May 10, 1999]

§ 165.164 Security Zones; Dignitary Arrival/Departure New York, NY.

(a) The following areas are established as security zones:

(1) *Location.* Wall Street heliport: All waters of the East River within the following boundaries: East of a line drawn between approximate position 40°42′01″N 074°00′39″W (east of The Battery) to 40°41′36″N 074°00′52″W (NAD 1983) (point north of Governors Island) and north of a line drawn from the point north of Governors Island to the southwest corner of Pier 7 North, Brooklyn; and south of a line drawn between the northeast corner of Pier 13,

Manhattan, and the northwest corner of Pier 2 North, Brooklyn.

(2) [*Reserved*]

(3) *Location.* Marine Air Terminal, La Guardia Airport: All waters of Bowery Bay, Queens, New York, south of a line drawn from the western end of La Guardia Airport at approximate position 40°46′47″N 073°53′05″W (NAD 1983) to the Rikers Island Bridge at approximate position 40°46′51″N 073°53′21″W (NAD 1983) and east of a line drawn between the point at the Rikers Island Bridge to a point on the shore in Queens, New York, at approximate position 40°46′36″N 073°53′31″W (NAD 1983).

(4) The security zone will be activated 30 minutes before the dignitaries' arrival into the zone and remain in effect until 15 minutes after the dignitaries' departure from the zone.

(5) The activation of a particular zone will be announced by facsimile and marine information broadcasts.

(b) *Regulations.* (1) The general regulations contained in 33 CFR 165.33 apply .

(2) All persons and vessels shall comply with the instructions of the Coast Guard Captain of the Port or the designated on-scene-patrol personnel. These personnel comprise commissioned, warrant, and petty officers of the Coast Guard. Upon being hailed by a U.S. Coast Guard vessel using siren, radio, flashing light, or other means, the operator of a vessel shall proceed as directed.

[CGD01–98–006, 64 FR 24948, May 10, 1999]

§ 165.165 Regulated Navigation Area; Kill Van Kull Channel, Newark Bay Channel, South Elizabeth Channel, Elizabeth Channel, Port Newark Channel and New Jersey Pierhead Channel, New York and New Jersey.

(a) *Regulated Navigation Area (RNA).* All waters of the Kill Van Kull (KVK) Channel east of KVK Light 16A (LLNR 37340) in North of Shooters Island Reach, east of Shooters Island Light 2 (LLNR 37375) in South of Shooters Island Reach, and west of KVK Channel Junction Lighted Bell Buoy 'KV' (LLNR 37265) in Constable Hook Reach; all waters of Newark Bay Channel south of Newark Bay Light 19 (LLNR 37505); all waters of South Elizabeth Channel, Elizabeth Channel, Port Newark Channel, and New Jersey Pierhead Channel south of New Jersey Pierhead South Channel Lighted Buoy 5 (LLNR 37020).

(b) *Description of Work Areas in the RNA.*

(1) Work Area (1): The waters bounded by a line connecting the following points:

Latitude	Longitude
40°38′40.0″N	074°03′45.0″W
40°38′50.4″N	074°04′16.0″W
40°38′57.9″N	074°04′11.8″W
40°39′03.8″N	074°04′43.8″W
40°39′04.5″N	074°05′07.6″W
40°39′01.8″N	074°05′14.8″W
40°39′05.0″N	074°05′17.1″W
40°39′10.3″N	074°05′05.0″W
40°39′09.3″N	074°04′27.8″W
40°39′00.2″N	074°03′45.1″W
40°38′58.0″N	074°03′34.9″W
40°38′40.0″N	074°03′45.0″W

(2) Work Area (2): The waters bounded by a line connecting the following points:

Latitude	Longitude
40°38′50.4″N	074°04′16.0″W
40°38′57.5″N	074°04′37.8″W
40°38′59.2″N	074°04′55.4″W
40°38′57.4″N	074°05′12.9″W
40°38′47.5″N	074°05′33.8″W
40°38′45.8″N	074°05′43.6″W
40°38′49.4″N	074°05′44.7″W
40°38′51.0″N	074°05′35.7″W
40°39′04.7″N	074°05′06.6″W
40°39′03.7″N	074°04′29.5″W
40°38′57.9″N	074°04′11.8″W
40°38′50.4″N	074°04′16.0″W

(3) Work Area (3): The waters bounded by a line connecting the following points:

Latitude	Longitude
40°38′45.8″ N	074°05′43.6″ W
40°38′49.4″ N	074°05′44.7″ W
40°38′51.2″ N	074°05′35″ W
40°39′01.8″ N	074°05′14.8″ W
40°39′05.0″ N	074°05′17.1″ W
40°38′57.5″ N	074°05′32.3″ W
40°38′53.8″ N	074°05′44.1″ W
40°38′53.1″ N	074°05′56.8″ W
40°38′55.3″ N	074°06′38.1″ W
40°38′41.5″ N	074°07′18.3″ W
40°38′38.2″ N	074°07′41.4″ W
40°38′38.5″ N	074°07′46.0″ W
40°38′35.2″ N	074°07′49.0″ W
40°38′31.2″ N	074°07′50.0″ W
40°38′30.1″ N	074°07′41.3″ W
40°38′33.9″ N	074°07′15.1″ W
40°38′44.0″ N	074°06′45.7″ W
40°38′46.7″ N	074°06′25.9″ W
40°38′44.8″ N	074°05′49.6″ W
40°38′45.8″ N	074°05′43.6″ W

(4) Work Area (4): The waters bounded by a line connecting the following points:

Latitude	Longitude
40°38′31.2″ N	074°07′50.0″ W
40°38′35.2″ N	074°07′49.0″ W
40°38′36.6″ N	074°08′01.2″ W
40°38′28.2″ N	074°08′51.0″ W
40°38′35.2″ N	074°09′06.2″ W
40°38′30.0″ N	074°09′12.0″ W
40°38′24.8″ N	074°09′02.6″ W
40°38′24.0″ N	074°08′52.0″ W
40°38′31.5″ N	074°08′07.4″ W
40°38′31.8″ N	074°07′54.6″ W
40°38′31.2″ N	074°07′50.0″ W

(5) Work Area (5): The waters bounded by a line connecting the following points:

Latitude	Longitude
40°38′35.2″ N	074°07′49.0″ W
40°38′38.5″ N	074°07′46.0″ W
40°38′40.7″ N	074°08′01.3″ W
40°38′34.0″ N	074°08′41.0″ W
40°38′40.0″ N	074°08′52.0″ W
40°38′50.0″ N	074°08′55.0″ W
40°38′35.2″ N	074°09′06.2″ W
40°38′28.2″ N	074°08′51.0″ W
40°38′36.6″ N	074°08′01.2″ W
40°38′35.2″ N	074°07′49.0″ W

(6) Work Area (6): The waters bounded by a line connecting the following points:

Latitude	Longitude
40°39′17.0″N	074°08′38.0″W
40°40′21.0″N	074°08′00.0″W
40°40′34.3″N	074°07′54.0″W
40°40′35.9″N	074°08′03.9″W
40°40′33.2″N	074°08′12.0″W
40°40′26.6″N	074°08′17.9″W
40°39′34.3″N	074°08′55.8″W
40°39′30.8″N	074°08′58.2″W
40°39′21.6″N	074°08′50.2″W
40°39′17.0″N	074°08′38.0″W

(7) Work Area (7): The waters bounded by a line connecting the following points:

Latitude	Longitude
40°40′26.7″N	074°08′17.9″W
40°41′14.4″N	074°09′35.0″W
40°41′18.9″N	074°09′31.9″W
40°40′46.1″N	074°08′38.9″W
40°40′44.5″N	074°08′30.2″W
40°40′33.2″N	074°08′12.0″W
40°40′26.7″N	074°08′17.9″W

(8) Work Area (8): The waters bounded by a line connecting the following points:

Latitude	Longitude
40°39′30.8″N	074°08′58.2″W
40°39′40.6″N	074°09′22.5″W
40°39′43.5″N	074°09′25.8″W
40°39′44.8″N	074°09′24.9″W
40°39′32.8″N	074°08′55.2″W
40°39′30.8″N	074°08′58.2″W
AND	
40°39′21.6″N	074°08′50.2″W
40°39′17.0″N	074°03′38.0″W
40°38′50.0″N	074°08′55.0″W
40°38′30.0″N	074°09′12.0″W
40°38′33.3″N	074°09′19.5″W
40°38′46.8″N	074°09′22.8″W
40°39′07.7″N	074°08′58.8″W
40°39′21.6″N	074°08′50.2″W

(9) Work Area (9): The waters bounded by a line connecting the following points:

Latitude	Longitude
40°40′34.3″N	074°07′54.0″W
40°41′08.5″N	074°07′38.5″W
40°41′11.6″N	074°07′50.8″W
40°41′17.6″N	074°07′56.4″W
40°41′20.0″N	074°08′00.3″W
40°41′42.3″N	074°08′21.2″W
40°41′59.4″N	074°09′11.0″W
40°41′55.8″N	074°09′13.1″W
40°41′39.1″N	074°08′24.6″W
40°41′21.0″N	074°08′07.6″W
40°40′46.1″N	074°08′38.9″W
40°40′44.5″N	074°08′30.2″W
40°40′50.4″N	074°08′30.3″W
40°41′13.4″N	074°08′09.7″W
40°41′13.7″N	074°08′05.6″W
40°41′03.2″N	074°07′55.7″W
40°40′54.4″N	074°07′55.7″W
40°40′35.9″N	074°08′03.9″W
40°40′34.3″N	074°07′54.0″W

(c) *Projected dates for each work area.* Dredging is scheduled to commence in Work Area (2) on April 19, 1999. As contracts are let for dredging of each of the remaining work areas, commencement dates will be made available via the Local Notice to Mariners, marine information broadcasts, facsimile, and at New York Harbor Operations Committee meetings.

(d) *Regulations.* (1) No vessel shall enter or transit any work area where drill barges and/or dredges are located without permission of Vessel Traffic Service New York (VTSNY).

(2) Each vessel transiting in the vicinity of the work areas, where drill barges and/or dredges are located, is required to do so at no wake speed.

(3) No vessel shall enter the RNA when they are advised by the drilling barge or VTSNY that a misfire or hangfire has occurred. Vessels already

underway in the RNA shall proceed to clear the impacted area immediately.

(4) Vessels, 300 gross tons or greater, and tugs with tows are prohibited from meeting or overtaking other vessels when transiting alongside an active work area.

(5) Vessels, 300 gross tons or greater, and tugs with tows transiting with the prevailing current (as measured from the Battery tide station) are regarded as the stand-on vessel.

(6) Prior to entering the RNA, the master, pilot or operator of each vessel, 300 gross tons or greater and tugs with tows, shall ensure that they have sufficient propulsion and directional control to safely navigate the area under the prevailing conditions, and shall notify VTSNY as to their decision regarding the employment of assist tugs while transiting the RNA.

(7) Hawser or wire length must not exceed 100 feet, measured from the towing bit on the tug to the point where the hawser or wire connects with the towed vessel or barge, for any vessel with another vessel/barge in tow.

(8) Waiver. The Captain of the Port, New York may, upon request, authorize a deviation from any regulation in this section if it is found that the proposed operations can be done safely. An application for deviation must be received not less than 24 hours before the intended operation and must state the need and describe the proposal.

(9) Tugs with tows includes a tug with a vessel or barge in tow, alongside, or being pushed.

[USCG–1998–4443, 64 FR 18579, Apr. 15, 1999; CGD01–98–165, 64 FR 34313, June 25, 1999]

§ 165.166 Safety Zone; Annual Burlington Independence Day Celebration Fireworks Display, Burlington Bay, Vermont.

(a) *Location.* All waters of Burlington Bay within a 250 yard radius of a fireworks platform anchored approximately 250 yards west of Burlington, Vermont, at or near 44°28′ 33′ ′N latitude and 073°13′ 33′ ′W longitude (NAD 1983).

(b) *Effective period.* The safety zone is in effect annually on the third of July from 7:45 p.m. until 10:15 p.m., unless extended or terminated sooner by the Captain of the Port New York. The effective period will be announced annually via Safety Marine Information Broadcasts and locally issued notices.

(c) *Regulations.* (1) The general regulations contained in 33 CFR 165.23 apply.

(2) All persons and vessels shall comply with the instructions of the Coast Guard Captain of the Port or the designated on scene patrol personnel. U.S. Coast Guard patrol personnel include commissioned, warrant, and petty officers of the Coast Guard. Upon being hailed by a U.S. Coast Guard vessel via siren, radio, flashing light, or other means, the operator of a vessel shall proceed as directed.

[CGD01–95–012, 60 FR 31408, June 15, 1995]

§ 165.167 Safety Zone; Annual Rensselaer Festival Fireworks Display, Hudson River, New York.

(a) *Location.* The safety zone includes the waters of the Hudson River, shore to shore, north of 42°38′ 12″ N latitude (NAD 1983) and south of the Dunn Memorial Bridge, Albany, New York.

(b) *Effective period.* This section is in effect annually on the third Saturday in September from 8:30 p.m. until 10 p.m., unless extended or terminated sooner by the Captain of the Port New York. The effective period will be announced annually via Safety Marine Information Broadcasts and locally issued notices.

(c) *Regulations.*

(1) The general regulations contained in 33 CFR 165.23 apply.

(2) All persons and vessels shall comply with the instructions of the Coast Guard Captain of the Port or the designated on scene patrol personnel. U.S. Coast Guard patrol personnel include commissioned, warrant, and petty officers of the Coast Guard. Upon being hailed by a U.S. Coast Guard vessel via siren, radio, flashing light, or other means, the operator of a vessel shall proceed as directed.

[CGD 01–011, 60 FR 42789, Aug. 17, 1995]

§ 165.170 Safety Zone; Annual Heritage of Pride Fireworks Display, Hudson River, New York.

(a) *Location.* All waters of the Hudson River within a 300 yard radius of a fireworks platform anchored approximately 330 yards west of the Manhattan pierhead line between Pier 45 and Pier 49.

(b) *Effective period.* This section is in effect annually on the last Sunday in June from 9:30 p.m. until 11:30 p.m., unless extended or terminated sooner by the Captain of the Port New York. The effective period will be announced annually via Safety Marine Information Broadcasts and locally issued notices.

(c) *Regulations.* (1) The general regulations contained in 33 CFR 165.23 apply.

(2) All persons and vessels shall comply with the instructions of the Coast Guard Captain of the Port or the designated on scene patrol personnel. U.S. Coast Guard patrol personnel include commissioned, warrant, and petty officers of the Coast Guard. Upon being hailed by a U.S. Coast Guard vessel via siren, radio, flashing light, or other means, the operator of a vessel shall proceed as directed.

[CGD01–95–003, 60 FR 33119, June 27, 1995]

§ 165.174 Safety Zone; Annual South Street Seaport New Year's Eve Fireworks Display, East River, New York.

(a) *Location.* All waters of the East River south of the Brooklyn Bridge and north of a line drawn from Pier 9, Manhattan to Pier 3, Brooklyn, New York.

(b) *Effective period.* This section is in effect annually from 11:30 p.m. on December 31, until 12:45 a.m. on January 1, unless extended or terminated sooner by the Captain of the Port New York. The effective period will be announced annually via Safety Marine Information Broadcasts and locally issued notices.

(c) *Regulations.* (1) The general regulations contained in 33 CFR 165.23 apply.

(2) All persons and vessels shall comply with the instructions of the Coast Guard Captain of the Port or the designated on scene patrol personnel. U.S. Coast Guard patrol personnel include commissioned, warrant, and petty officers of the Coast Guard. Upon being hailed by a U.S. Coast Guard vessel via siren, radio, flashing light, or other means, the operator of a vessel shall proceed as directed.

[CGD01–95–010, 60 FR 57343, Nov. 15, 1995]

§ 165.175 Safety Zone; Annual South Street Seaport Memorial Day Fireworks Display, East River, New York.

(a) *Location.* All waters of the East River south of the Brooklyn Bridge and north of a line drawn from Pier 9, Manhattan to Pier 3, Brooklyn.

(b) *Effective period.* This safety zone is in effect annually on the Sunday before Memorial Day from 8 p.m. until 10 p.m., unless extended or terminated sooner by the Captain of the Port, New York. The effective period will be announced annually via Safety Marine Information Broadcasts and locally issued notices.

(c) *Regulations.* (1) The general regulations contained in 33 CFR 165.23 apply.

(2) All persons and vessels shall comply with the instructions of the Coast Guard Captain of the Port or the designated on scene patrol personnel. U.S. Coast Guard patrol personnel include commissioned, warrant, and petty officers of the Coast Guard. Upon being hailed by a U.S. Coast Guard vessel via siren, radio, flashing light, or other means, the operator of a vessel shall proceed as directed.

[CGD01–95–004, 60 FR 20430, Apr. 26, 1995]

§ 165.178 Safety Zone; Annual North Hempstead Memorial Day Fireworks Display, Hempstead Harbor, New York.

(a) *Location.* All waters of Hempstead Harbor within a 300 yard radius of a fireworks platform located approximately 300 yards north of Bar Beach, North Hempstead, New York.

(b) *Effective period.* This safety zone is in effect annually on the Friday before Memorial Day from 8 p.m. until 10 p.m., unless extended or terminated sooner by the Captain of the Port New York. If the fireworks is canceled because of bad weather, this section is in effect on the following Saturday at the time unless extended or terminated sooner by the Captain of the Port New

York. The effective period will be announced annually via Safety Marine Information Broadcasts and locally issued notices.

(c) *Regulations.* (1) The general regulations contained in 33 CFR 165.23 apply.

(2) All persons and vessels shall comply with the instructions of the Coast Guard Captain of the Port or the designated on scene patrol personnel. U.S. Coast Guard patrol personnel include commissioned, warrant, and petty officers of the Coast Guard. Upon being hailed by a U.S. Coast Guard vessel via siren, radio, flashing light, or other means, the operator of a vessel shall proceed as directed.

[CGD01–95–013, 60 FR 20431, Apr. 26, 1995]

FIFTH COAST GUARD DISTRICT

§ 165.501 Chesapeake Bay entrance and Hampton Roads, Va. and adjacent waters—regulated navigation area.

(a) *Regulated Navigation Area.* The waters enclosed by the shoreline and the following lines are a Regulated Navigation Area:

(1) A line drawn across the entrance to Chesapeake Bay between Wise Point and Cape Charles Light, and then continuing to Cape Henry Light.

(2) A line drawn across the Chesapeake Bay between Old Point Comfort Light and Cape Charles City Range ''A'' Rear Light.

(3) A line drawn across the James River along the eastern side of the U.S. Route 17 highway bridge, between Newport News and Isle of Wight County, Virginia.

(4) A line drawn across Chuckatuck Creek along the northern side of the north span of the U.S. Route 17 highway bridge, between Isle of Wight County and Suffolk, Virginia.

(5) A line drawn across the Nansemond River along the northern side of the Mills Godwin (U.S. Route 17) Bridge, Suffolk, Virginia.

(6) A line drawn across the mouth of Bennetts Creek, Suffolk, Virginia.

(7) A line drawn across the Western Branch of the Elizabeth River along the eastern side of the West Norfolk Bridge, Portsmouth, Virginia.

(8) A line drawn across the Southern Branch of the Elizabeth River along the northern side of the I–64 highway bridge, Chesapeake, Virginia.

(9) A line drawn across the Eastern Branch of the Elizabeth River along the western side of the west span of the Campostella Bridge, Norfolk, Virginia.

(10) A line drawn across the Lafayette River along the western side of the Hampton Boulevard Bridge, Norfolk, Virginia.

(11) A line drawn across Little Creek along the eastern side of the Ocean View Avenue (U.S. Route 60) Bridge, Norfolk, Virginia.

(12) A line drawn across Lynnhaven Inlet along the northern side of the Shore Drive (U.S. Route 60) Bridge, Virginia Beach, Virginia.

(b) *Definitions.* In this section:

(1) *CBBT* means the Chesapeake Bay Bridge Tunnel.

(2) *Thimble Shoal Channel* consists of the waters bounded by a line connecting Thimble Shoal Channel Lighted Bell Buoy 1TS, thence to Lighted Gong Buoy 17, thence to Lighted Buoy 19, thence to Lighted Buoy 21, thence to Lighted Buoy 22, thence to Lighted Buoy 18, thence to Lighted Buoy 2, thence to the beginning.

(3) *Thimble Shoal North Auxiliary Channel* consists of the waters in a rectangular area 450 feet wide adjacent to the north side of Thimble Shoal Channel, the southern boundary of which extends from Thimble Shoal Channel Lighted Buoy 2 to Lighted Buoy 18.

(4) *Thimble Shoal South Auxiliary Channel* consists of the waters in a rectangular area 450 feet wide adjacent to the south side of Thimble Shoal Channel, the northern boundary of which extends from Thimble Shoal Channel Lighted Bell Buoy 1TS, thence to Lighted Gong Buoy 17 thence to Lighted Buoy 19, thence to Lighted Buoy 21.

(c) *Applicability.* This section applies to all vessels operating within the Regulated Navigation Area, including naval and public vessels, except vessels that are engaged in the following operations:

(1) Law Enforcement.

(2) Servicing aids to navigation.

(3) Surveying, maintenance, or improvement of waters in the Regulated Navigation Area.

(d) *Regulations*—(1) *Anchoring restrictions.* (i) No vessel over 65 feet long may anchor or moor in this Regulated Navigation Area outside an anchorage designated in § 110.168 of this title, unless:

(A) The vessel has the permission of the Captain of the Port.

(B) The vessel is carrying explosives for use on river or harbor works or on other work under a permit issued by the District Engineer, Corps of Engineers, and the vessel is anchored in or near the vicinity of the work site. The District Engineer shall prescribe the quantities of explosives allowed on the vessel and the conditions under which the vessel may store or handle explosives. The vessel may not anchor unless a copy of the permit and instructions relating to the carriage and handling of explosives from the Corps of Engineers to the vessel or contractor are provided to the Captain of the Port before the vessel anchors.

(ii) A vessel may anchor in a channel with the permission of the Captain of the Port, if the vessel is authorized by the District Engineer to engage in the recovery of sunken property, to lay or repair a legally established pipeline or cable, or to engage in dredging operations.

(iii) A vessel engaged in river and harbor improvement work under the supervision of the District Engineer may anchor in a channel, if the District Engineer notifies the Captain of the Port in advance of the start of the work.

(iv) Except as provided in paragraphs (d)(1)(ii) and (iii) of this section, a vessel may not anchor in a channel unless it is unable to proceed without endangering the safety of persons, property, or the environment.

(v) A vessel that is anchored in a channel because it is unable to proceed without endangering the safety of persons, property, or the environment, shall:

(A) Not anchor, if possible, within a cable or pipeline area.

(B) Not obstruct or endanger the passage of any vessel.

(C) Anchor near the edge of the channel, if possible.

(D) Not interfere with the free navigation of any channel.

(E) Not obstruct the approach to any pier.

(F) Not obstruct aids to navigation or interfere with range lights.

(G) Move to a designated anchorage or get underway as soon as possible or when directed by the Captain of the Port.

(vi) A vessel may not anchor within the confines of Little Creek Harbor, Desert Cove, or Little Creek Cove without the permission of the Captain of the Port. The Captain of the Port shall consult with the Commander, Naval Amphibious Base Little Creek, before granting permission to anchor within this area.

(2) *Secondary Towing Rig Requirements.* (i) A vessel over 100 gross tons may not be towed in this Regulated Navigation Area unless it is equipped with a secondary towing rig, in addition to its primary towing rig, that:

(A) Is of sufficient strength for towing the vessel.

(B) Has a connecting device that can receive a shackle pin of at least two inches in diameter.

(C) Is fitted with a recovery pickup line led outboard of the vessel's hull.

(ii) A tow consisting of two or more vessels, each of which is less than 100 gross tons, that has a total gross tonnage that is over 100 gross tons, shall be equipped with a secondary towing rig between each vessel in the tow, in addition to its primary towing rigs, while the tow is operating within this Regulated Navigation Area. The secondary towing rig must:

(A) Be of sufficient strength for towing the vessels.

(B) Have connecting devices that can receive a shackle pin of at least two inches in diameter.

(C) Be fitted with recovery pickup lines led outboard of the vessels' hulls.

(3) *Anchoring Detail Requirements.* A self-propelled vessel over 100 gross tons, which is equipped with an anchor or anchors (other than a tugboat equipped with bow fenderwork of a type of construction that prevents an anchor being rigged for quick release), that is underway within two nautical miles of the CBBT or the I–664 Bridge Tunnel shall station its personnel at locations on the vessel from which

they can anchor the vessel without delay in an emergency.

(4) *Draft Limitations.* A vessel drawing less than 25 feet may not enter the Thimble Shoal Channel, unless the vessel is crossing the channel. Channel crossings shall be made as perpendicular to the channel axis as possible.

(5) *Traffic Directions.* (i) Except when crossing the channel, a vessel in the Thimble Shoal North Auxiliary Channel shall proceed in a westbound direction.

(ii) Except when crossing the channel, a vessel in the Thimble Shoal South Auxiliary Channel shall proceed in an eastbound direction.

(6) *Restrictions on Vessels With Impaired Maneuverability*—(i) *Before entry.* A vessel over 100 gross tons, whose ability to maneuver is impaired by hazardous weather, defective steering equipment, defective main propulsion machinery, or other damage, may not enter the Regulated Navigation Area without the permission of the Captain of the Port, unless the vessel is attended by one or more tugboats with sufficient total power to ensure the vessel's safe passage through the Regulated Navigation Area.

(ii) *After entry.* The master of a vessel over 100 gross tons, which is underway in the Regulated Navigation Area, shall, as soon as possible, do the following, if the vessel's ability to maneuver becomes impaired for any reason:

(A) Report the impairment to the Captain of the Port.

(B) Unless the Captain of the Port waives this requirement, have one or more tugboats, with sufficient total power to ensure the vessel's safe passage through the Regulated Navigation Area, attend the vessel.

(7) *Requirements for Navigation Charts, Radars, and Pilots.* No vessel over 100 gross tons may enter the Regulated Navigation Area, unless it has on board:

(i) Corrected charts of the Regulated Navigation Area.

(ii) An operative radar during periods of reduced visibility; or

(iii) A pilot or other person on board with previous experience navigating vessels on the waters of the Regulated Navigation Area.

(8) *Emergency Procedures.* (i) Except as provided in paragraphs (d)(8) (ii) and (iii) of this section, in an emergency any vessel may deviate from the regulations in this section to the extent necessary to avoid endangering the safety of persons, property, or the environment.

(ii) A vessel over 100 gross tons with an emergency that is located within two nautical miles of the CBBT or I–664 Bridge Tunnel (other than a self-propelled vessel that is capable of getting underway in 30 minutes, has sufficient power to avoid any bridge, tunnel island, or vessel, and whose maneuverability is not impaired by a steering equipment or main propulsion defect):

(A) Shall notify the Captain of the Port of its location and the nature of the emergency, as soon as possible.

(B) May not anchor outside an anchorage designated in § 110.168 of this title, unless the vessel is unable to proceed to an anchorage without endangering the safety of persons, property, or the environment.

(C) Shall make arrangements for one or more vessels to attend the vessel, with sufficient power to keep the vessel in position.

(iii) If a vessel over 100 gross tons must anchor outside an anchorage because the vessel is unable to proceed without endangering the safety of persons, property, or the environment, the vessel shall:

(A) Not anchor, if possible, within a cable or pipeline area.

(B) Not obstruct or endanger the passage of any vessel.

(C) Not interfere with the free navigation of any channel.

(D) Not obstruct the approach to any pier.

(E) Not obstruct aids to navigation or interfere with range lights.

(F) Move to a designated anchorage or get underway as soon as possible or when directed by the Captain of the Port.

(9) *Vessel Speed Limits on Little Creek.* A vessel may not proceed at a speed over five knots between the Route 60 bridge and the mouth of Fishermans Cove (Northwest Branch of Little Creek).

(10) *Vessel Speed Limits on the Southern Branch of the Elizabeth River.* A vessel may not proceed at a speed over six knots between the junction of the Southern and Eastern Branches of the Elizabeth River and the Norfolk and Portsmouth Belt Line Railroad Bridge between Chesapeake and Portsmouth, Virginia.

(11) *Restrictions on Vessel Operations During Aircraft Carrier and Other Large Naval Vessel Transits of the Elizabeth River.* (i) Except for a vessel that is moored at a marina, wharf, or pier or that is anchored, no vessel may, without the permission of the Captain of the Port, come within or remain within 500 yards from a naval aircraft carrier or other large naval vessel, which is restricted in its ability to maneuver in the confined waters, while the aircraft carrier or large naval vessel is transiting the Elizabeth River between the Norfolk Naval Base, Norfolk, Virginia, and the Norfolk Naval Shipyard, Portsmouth, Virginia.

(ii) The permission required by paragraph (d)(11)(i) of this section may be obtained from a designated representative of the Captain of the Port, including the duty officer at the Coast Guard Marine Safety Office, Hampton Roads, or from the Coast Guard patrol commander.

(iii) The Captain of the Port issues a Broadcast Notice to Mariners to inform the marine community of scheduled vessel movements that are covered by paragraph (d)(11) of this section.

(iv) Notwithstanding paragraph (d)(11)(i) of this section, a vessel may not remain moored at the Elizabeth River Ferry dock at the foot of High Street in Portsmouth, Virginia, when the dock is within a safety zone for a naval aircraft carrier or other large naval vessel.

(12) *Restrictions on Vessel Operations During Liquefied Petroleum Gas Carrier Movements on the Chesapeake Bay and Elizabeth River.* (i) Except for a vessel that is moored at a marina, wharf, or pier or that is anchored, and which remains moored or at anchor, no vessel may, without the permission of the Captain of the Port, come within or remain within 250 feet from the port and starboard sides and 300 yards from the bow and stern of a vessel that is carrying liquefied petroleum gas in bulk as cargo, while the gas carrier transits between Thimble Shoal Lighted Buoy 3 and the Atlantic Energy Terminal on the Southern Branch of the Elizabeth River.

(ii) The permission required by paragraph (d)(12)(i) of this section may be obtained from a designated representative of the Captain of the Port, including the duty officer at the Coast Guard Marine Safety Office, Hampton Roads, or from the Coast Guard patrol commander.

(iii) A vessel that has carried liquefied petroleum gas in a tank is carrying the liquefied petroleum gas as cargo for the purposes of paragraph (d)(12)(i) of this section, unless the tank has been gas freed since liquefied petroleum gas was last carried as cargo.

(iv) The Captain of the Port issues a Broadcast Notice to Mariners to inform the marine community of scheduled vessel movements that are covered by paragraph (d)(12) of this section.

(v) Notwithstanding paragraph (d)(12)(i) of this section, a vessel may not remain moored at the Elizabeth River Ferry dock at the foot of High Street in Portsmouth, Virginia, when the dock is within a safety zone for a liquefied petroleum gas carrier.

(13) Restrictions on the Use of the Elizabeth River Ferry Dock at the Foot of High Street, Portsmouth, Virginia.

(i) No vessels, other than those being operated as ferries for the Tidewater Transportation District Commission, may embark or disembark passengers or otherwise moor at the Elizabeth River Ferry dock at the foot of High Street, Portsmouth, Virginia.

(ii) Any vessel being operated for the Tidewater Transportation District Commission may not moor at the dock longer than necessary to embark passengers awaiting transportation or disembark passengers already aboard the vessel.

(iii) The master or another authorized licensed officer must remain in the pilothouse and be prepared to get the vessel underway immediately or take other actions necessary to ensure the safety of the vessel's passengers, whenever a vessel is moored at the dock.

(e) *Waivers.* (1) The Captain of the Port may, upon request, waive any regulation in this section, if the Captain of the Port finds that the vessel can be operated safely.

(2) An application for a waiver must state the need for the waiver and describe the proposed vessel operations.

(f) *Control of Vessels Within the Regulated Navigation Area.* (1) When necessary to prevent damage, destruction, or loss of any vessel, the I–664 Bridge Tunnel, or the CBBT, the Captain of the Port may direct the movement of vessels or issue orders requiring vessels to anchor or moor in specific locations.

(2) If needed to further the maritime or commercial interests of the United States, the Captain of the Port may order a vessel to move from the location in which it is anchored to another location within the Regulated Navigation Area.

(3) The master of a vessel within the Regulated Navigation Area shall comply with any orders or directions issued to the master's vessel by the Captain of the Port.

[CGD 05–88–17, 54 FR 608, Jan. 9, 1989; CGD 05–88–17, 54 FR 7190, Feb. 17, 1989, as amended by CGD 05–89–01, 54 FR 19169, May 4, 1989]

§ 165.502 Cove Point, Chesapeake Bay, Maryland—safety zone.

(a) The waters and waterfront facilities located within the following boundaries constitute a safety zone effective when an LNG (Liquefield Natural Gas) carrier is maneuvering in the vicinity of the Cove Point terminal and when a moored LNG carrier indicates its intention to get underway: A line beginning at a point one-half mile NW of the end of the north pier of the Columbia LNG facility at Cove Point, Maryland, located at 38°24′ 43′ ′N latitude, 76°23′ 32′ ′W longitude; thence 056°T to a point 2800 yards offshore at 38°24′ 59′ ′N latitude, 76°23′ 01′ ′W longitude; thence 146°T to a point located 2300 yards offshore at 38°23′ 52′ ′N latitude, 76°22′ 03′ ′W longitude; thence 236°T to a point one-half mile SE of the end of the south pier of the Columbia LNG facility at Cove Point, Maryland, located 38°23′ 39′ ′N latitude, 76°22′ 35′ ′W longitude; thence northwesterly to the point of origin and the area within 50 yards on the shore side of the Columbia LNG Corporation offshore terminal.

(b) The waters and waterfront facilities located within the following boundary constitute a safety zone when an LNG carrier is moored at the Columbia LNG offshore terminal; an area extending 50 yards shoreward of the offshore terminal and 200 yards offshore of all parts of the offshore terminal and the LNG carrier.

(c) The waters and waterfront facilities located within the following boundary constitute a safety zone when no LNG carrier is moored at the receiving terminal: the area within 50 yards of the Columbia LNG offshore terminal, at Cove Point, Maryland.

§ 165.504 Newport News Shipbuilding and Dry Dock Company Shipyard, James River, Newport News, Va.

(a) *Location.* The following is a security zone: The waters of the James River encompassed by a line beginning at the intersection of the shoreline with the northernmost property line of the Newport News Shipbuilding and Dry Dock Co. at latitude 37°00′38.1″N, longitude 76°27′05.7″W, thence southerly to latitude 36°59′58.4″N, longitude 76°27′16.7″W, thence southeasterly to latitude 36°59′23.0″N, longitude 76°26′54.6″W, thence westerly to latitude 36°59′21.5″N, longitude 76°26′58.4″W, thence southeasterly to latitude 36°59′12.9″N, longitude 76°26′52.4″W, thence easterly to latitude 36°59′14.2″N, longitude 76°26′49.1″W, thence southeasterly to latitude 36°58′37.8″N, longitude 76°26′26.3″W, thence easterly to latitude 36°58′43.5″N, longitude 76°26′13.7″W, thence northerly to the intersection of the shoreline with the southernmost property line of the Newport News Shipbuilding and Dry Dock Co. at latitude 36°58′48.0″N, longitude 76°26′11.2″W, thence northwesterly along the shoreline to the point of beginning.

(b) *Security zone anchorage.* The following is a security zone anchorage: The waters of the James River encompassed by a line beginning at the intersection of the shoreline with the northernmost property line of the Newport News Shipbuilding and Dry Dock Company shipyard at latitude 37°00′38.1″N, longitude 76°27′05.7″W, thence southerly

to latitude 36°59′58.4″N, longitude 76°27′16.7″W, thence easterly to the shoreline at latitude 36°59′58.5″N, longitude 76°27′11.6″W, thence along the shoreline to the point of beginning.

(c) *Special Regulations.* (1) Section 165.33 (a), (e), and (f) do not apply to the following vessels or individuals on board those vessels:

(i) Public vessels of the United States.

(ii) Public vessels owned or operated by the Commonwealth of Virginia or its subdivisions for law enforcement or firefighting purposes.

(iii) Vessels owned by, operated by, or under charter to Newport News Shipbuilding and Dry Dock Co.

(iv) Vessels that are performing work at Newport News Shipbuilding and Dry Dock Co., including the vessels of subcontractors and other vendors of Newport News Shipbuilding and Dry Dock Co. or other persons that have a contractual relationship with Newport News Shipbuilding and Dry Dock Co.

(v) Vessels that are being built, rebuilt, repaired, or otherwise worked on at or by Newport News Shipbuilding and Dry Dock Co. or another person authorized to perform work at the shipyard.

(vi) Vessels that are authorized by Newport News Shipbuilding and Dry Dock Company to moor at and use its facilities.

(vii) Commercial shellfish harvesting vessels taking clams from the shellfish beds within the zone, if

(A) The owner of the vessel has previously provided the Captain of the Port, Hampton Roads, Virginia, information about the vessel, including:

(*1*) The name of the vessel;

(*2*) The vessel's official number, if documented, or state number, if numbered by a state issuing authority;

(*3*) A brief description of the vessel, including length, color, and type of vessel;

(*4*) The name, Social Security number, current address, and telephone number of the vessel's master, operator, or person in charge; and

(*5*) Upon request, information the vessel's crew.

(B) The vessel is operated in compliance with any specific orders issued to the vessel by the Captain of the Port or other regulations controlling the operation of vessels within the security zone that may be in effect.

(d) *Enforcement.* The U.S. Coast Guard may be assisted in the enforcement of this zone by the U.S. Navy.

[CGD5 86–03, 51 FR 18322, May 19, 1986, as amended by CGD5 87–038, 52 FR 41996, Nov. 2, 1987]

§165.510 Delaware Bay and River, Salem River, Christina River and Schuylkill River-Regulated Navigation Area.

(a) *Regulated Navigation Area.* The following is a Regulated Navigation Area: The navigable waters of Delaware Bay and River, Salem River, Christina River, and Schuylkill River, in an area bounded on the south by a line drawn across the entrance to the Delaware Bay between Cape May Light and Harbor of Refuge Light and then continuing to the northernmost extremity of Cape Henlopen, and bounded on the north by a line drawn across the Delaware River between Trenton, NJ and Morrisville, PA along the southern side of the U.S. Route 1 Bridge.

(b) *Definitions.* As used in this section:

COTP means the Captain of the Port, Philadelphia, PA and any Coast Guard commissioned, warrant or petty officer who has been authorized by the COTP to act on his or her behalf.

Dangerous Cargo means those cargoes listed in §160.203 of this chapter when carried in bulk, but does not include cargoes listed in Table 1 of 46 CFR part 153.

Underway means that a vessel is not at anchor, made fast to the shore, or aground.

(c) *Applicability.* This section applies to any vessel operating within the Regulated Navigation Area, including a naval or public vessel, except a vessel engaged in:

(1) Law enforcement;

(2) Servicing aids to navigation; or

(3) Surveying, maintaining, or improving waters within the Regulated Navigation Area.

(d) *Draft limitation.* Unless otherwise authorized by the COTP, no vessel with a draft greater than 55 feet may enter this regulated navigation area.

NOTE: The project depth in many areas of the Regulated Navigation Area is less than 55 feet.

(e) *Oil transfer operations.* Unless otherwise authorized by the COTP, no vessel to vessel oil transfer operations, excluding bunkering, may be conducted within the area between the southern boundary of this regulated navigation area and the southern span of the Delaware Memorial Bridge except within the anchorage ground designated in 110.157(a)(1) of this chapter.

(f) *Requirements for vessels carrying dangerous cargoes.* The master, owner, or operator of a vessel carrying a dangerous cargo shall:

(1) Notify the COTP at least 72 hours before the vessel enters or departs the regulated navigation area and at least 12 hours before the vessel moves within the regulated navigation area. The notice must include a report of the vessel's propulsion and machinery status and, for foreign flag vessels, the notice must include any outstanding deficiencies identified by the vessel's flag state or classification society;

(2) Not enter, get or remain underway within the regulated navigation area if visibility is or is expected to be less than two (2) miles. If during the transit visibility becomes less than two (2) miles, the vessel must seek safe anchorage and notify the COTP immediately;

(3) Not anchor in any area within the regulated navigation area unless in times of emergency or with COTP permission;

(4) Not transfer dangerous cargo while the vessel is at anchor or bunkering;

(5) Maintain a manned watch in the steering compartment whenever the vessel is underway within the regulated navigation area unless the vessel has two separate and independent steering control systems with duplicate pilothouse steering gear control systems which meet the requirements of 46 CFR 85.25–55;

(6) When anchored within the regulated navigation area and:

(i) Sustained winds are greater than 25 knots but less than 40 knots, ensure the main engines are ready to provide full power in five minutes or less; and

(ii) Sustained winds are 40 knots or over, ensure that the main engines are on line to immediately provide propulsion;

(7) While moored within the regulated navigation area, ensure that at least two wire cable mooring lines (firewarps) are rigged and ready for use as emergency towing hookups fore and aft on the outboard side of the vessel;

(8) While underway or anchored within the regulated navigation area, ensure that at least two wire cable mooring lines (firewarps) are rigged and ready for use as emergency towing hookups fore and aft on the vessel; and,

(9) Proceed as directed by the COTP.

(g) *Requirements for vessels operating in the vicinity of a vessel carrying dangerous cargoes.* (1) Except for a vessel that is attending a vessel carrying dangerous cargo with permission from the master of the vessel carrying dangerous cargo or a vessel that is anchored or moored at a marina, wharf, or pier, and which remains moored or at anchor, no vessel may, without the permission of the COTP:

(i) Come or remain within 500 yards of the port or starboard side or within 1,000 yards of the bow or stern of an underway vessel that is carrying dangerous cargo; or

(ii) Come or remain within 100 yards of a moored or anchored vessel carrying dangerous cargo.

(2) The master, owner, or operator of any vessel receiving permission under paragraph (g)(1) of this section shall:

(i) Maintain a continuous radio guard on VHF–FM channels 13 and 16;

(ii) Operate at ''no wake'' speed or the minimum speed needed to maintain steerage; and

(iii) Proceed as directed by the COTP.

(3) No vessel may overtake a vessel carrying dangerous cargoes unless the overtaking can be completed before reaching any bend in the channel. Before any overtaking, the pilots, masters or operators of both the overtaking vessel and the vessel being overtaken must clearly agree on the circumstances of the overtaking, including vessel speeds, time and location of overtaking.

(h) *Additional restrictions above the C&D Canal.* When operating on the Delaware River above the C&D Canal:

(1) A vessel carrying dangerous cargo must be escorted by at least one commercial tug; and

(2) Meeting situations shall be avoided on river bends to the maximum extent possible.

(i) The COTP will issue a Broadcast Notice to Mariners to inform the marine community of scheduled vessel movements during which the restrictions imposed by paragraphs (g) and (h) of this section will be in effect.

[CGD 05–96–010, 62 FR 40275, July 28, 1997]

§ 165.514 Safety Zone: Atlantic Intracoastal Waterway and connecting waters, vicinity of Marine Corps Base Camp Lejeune, North Carolina.

(a) *Location.* The following area is a safety zone: All waters of the Atlantic Intracoastal Waterway (AICW) and connecting waters, from Bogue Sound—New River Light 58 (LLNR 39210) at approximate position 34°37′57″ North, 077°12′18″ West, and continuing in the AICW southwest to Bogue Sound—New River Daybeacon 70 (LLNR 39290) at approximate position 34°33′07″ North, 077°20′30″ West. All coordinates reference Datum: NAD 1983.

(b) Notwithstanding the provisions of 33 CFR 334.440(e)(2)(i), no vessel may enter the safety zone described in paragraph (a) of this section while weapons firing exercises are in progress, except as provided in paragraph (c) of this section or unless permitted by the Captain of the Port (COTP) Wilmington.

(1) Red warning flags or red warning lights will be displayed on towers located at both ends of the safety zone (Bear Creek and Cedar Point) while firing exercises are in progress. The flags or lights will be displayed by 8 a.m. on days where firing exercises are scheduled, and will be removed at the end of the firing exercise.

(2) A Coast Guard or U.S. Navy vessel will patrol each end of the safety zone to ensure the public is aware that firing exercises are in progress and that the firing area is clear of vessel traffic before weapons are fired.

(c)(1) The COTP Wilmington will announce the specific times and locations of firing exercises by Broadcast Notice to Mariners and Local Notice to Mariners. Normally, weapons firing for each firing exercise is limited to a two nautical mile portion of the safety zone. The COTP may issue general permission to transit all or specified parts of the safety zone outside of the actual firing area or if firing is temporarily stopped. This general permission will be announced in a Local Notice to Mariners and Broadcast Notice to Mariners.

(2) Weapons firing will be suspended and vessels permitted to transit the specified two nautical mile firing area for a one-hour period beginning at the start of each odd-numbered hour local time (e.g., 9 a.m.; 1 p.m.). A vessel may not enter the specified firing area unless it will be able to complete its transit of the firing area before firing exercises are scheduled to re-start at the beginning of the next even-numbered hour.

(d) U.S. Navy safety vessels may be contacted on VHF marine band radio channels 13 (156.65 Mhz) and 16 (156.8 Mhz). The Captain of the Port may be contacted at the Marine Safety Office, Wilmington, NC by telephone at 1–(800) 325–4956 or (910) 815–4895.

[CGD 05–98–38, 63 FR 58636, Nov. 2, 1998]

§ 165.515 Safety Zone: Cape Fear River, Wilmington, North Carolina.

(a) *Location.* The following area is a safety zone:

(1) The waters of the Cape Fear River bounded by a line connecting the following points:

Latitude	*Longitude*
34°14′ 12″ N	77°57′ 10″ W
34°14′ 12″ N	77°57′ 06″ W
34°13′ 54″ N	77°57′ 00″ W
34°13′ 54″ N	77°57′ 06″ W

(2) The safety zone boundary can be described as follows: starting at the stern of the Battleship USS NORTH CAROLINA, across the Cape Fear River to the north end of the Coast Guard moorings, down along the east bank of the Cape Fear River to the bow of the tug CAPTAIN JOHN TAXIS Memorial (Chandler's Wharf), back across the Cape Fear River to Eagle Island, and then up along the west bank of the Cape Fear River to the stern of the Battleship USS NORTH CAROLINA.

(b) *Definitions. The designated representative of the Captain of the Port* is any Coast Guard commissioned, warrant , or petty officer who has been authorized by the Captain of the Port, Wilmington, North Carolina to act on his behalf.

(c) *General information.* The Captain of the Port and the Duty Officer at the Marine Safety Office, Wilmington, North Carolina, can be contacted at telephone number (910) 343–4895. The Coast Guard Patrol Commander and the senior boarding officer on each vessel enforcing the safety zone can be contacted on VHF–FM channels 16 and 81.

(d) *Regulation.* Except for persons or vessels authorized by the Coast Guard Patrol Commander, no person or vessel may enter or remain in the regulated area.

(1) The operator of any vessel in the immediate vicinity of this safety zone shall:

(i) Stop the vessel immediately upon being directed to do so by any commissioned, warrant, or petty officer on board a vessel displaying a Coast Guard Ensign.

(ii) Proceed as directed by any commissioned, warrant, or petty officer on board a vessel displaying a Coast Guard Ensign.

(2) Any spectator vessel may anchor outside of the regulated area specified in paragraph (a) of the section, but may not block a navigable channel.

(e) *Effective date.* The Captain of the Port will issue a Marine Safety Information Broadcast and a Notice to Mariners to notify the public when this section is in effect.

[59 FR 33200, June 28, 1994]

§ 165.530 Safety Zone: Cape Fear and Northeast Cape Fear Rivers, NC.

(a) *Location.* The following area is a moving safety zone during the specified conditions: The waters of the Cape Fear and Northeast Cape Fear Rivers for 500 yards ahead and astern, and 75 yards abeam of a vessel carrying hazardous materials when designated by the Captain of the Port Wilmington, North Carolina.

(b) *General Information.* (1) The Captain of the Port and the Duty Officer at the Marine Safety Office, Wilmington, North Carolina, can be contacted at telephone number (910) 343–4895. The Coast Guard Patrol Commander enforcing the safety zone can be contacted on VHF–FM channels 16 and 81.

(2) The Captain of the Port may authorize and designate any Coast Guard commissioned, warrant, or petty officer to act on his behalf in enforcing this safety zone.

(3) The Marine Safety Office Wilmington will notify the maritime community of periods during which this safety zone will be in effect by providing advance notice of scheduled arrivals and departures of loaded hazardous materials vessels via a marine broadcast Notice to Mariners.

(c) *Regulation.* The general regulations governing safety zones contained in § 165.23 apply.

[COTP Wilmington, NC 94–004, 59 FR 42759, Aug. 19, 1994]

SEVENTH COAST GUARD DISTRICT

§ 165.701 Vicinity, Kennedy Space Center, Merritt Island, Florida—security zone.

(a) The water, land, and land and water within the following boundaries are a security zone—The perimeter of the Cape Canaveral Barge Canal and the Banana River at 28°24′ 33″ N., 80°39′ 48″ W.; then due west along the northern shoreline of the barge canal for 1,300 yards; then due north to 28°28′ 42″ N., 80°40′ 30″ W., on Merritt Island. From this position, the line proceeds irregularly to the eastern shoreline of the Indian River to a position 1,300 yards south of the NASA Causeway at 28°30′ 54″ N., 80°43′ 42″ W. (the line from the barge canal to the eastern shoreline of the Indian River is marked by a three-strand barbed-wire fence), then north along the shoreline of the Indian River to the NASA Causeway at 28°31′ 30″ N., 80°43′ 48″ W. The line continues west on the southern shoreline of the NASA Causeway to NASA Gate 3 (permanent), then north to the northern shoreline of the NASA Causeway and east on the northern shoreline of the causeway back to the shoreline on Merritt Island at position 28°31′ 36″ N., 80°43′ 42″ W., then northwest along the shoreline to 28°41′ 01.2″ N., 80°47′ 10.2″ W.

(Blackpoint); then due north to channel marker #6 on the Intracoastal Waterway (ICW), then northeast along the southern edge of the ICW to the western entrance to the Haulover Canal. From this point, the line continues northeast along the southern edge of the Haulover Canal to the eastern entrance to the canal; then due east to a point in the Atlantic Ocean 3 miles offshore at 28°44′ 42″ N., 80°37′ 51″ W.; then south along a line 3 miles from the coast to Wreck Buoy ''WR6'', then to Port Canaveral Channel Lighted Buoy 10, then west along the northern edge of the Port Canaveral Channel to the northeast corner of the intersection of the Cape Canaveral Barge Canal and the ICW in the Banana River at 28°24′ 36″ N., 80°38′ 42″ W. The line continues north along the east side of the Intracoastal Waterway to daymarker '35' thence North Westerly one quarter of a mile south of NASA Causeway East (Orsino Causeway) to the shoreline on Merritt Island at position 28°30.95′N., 80°37.6′W., then south along the shoreline to the starting point.

(b) The area described in paragraph (a) of this section is closed to all vessels and persons, except those vessels and persons authorized by the Commander, Seventh Coast Guard District, or the COTP Jacksonville, Florida, whenever space vehicles are to be launched by the United States Government from Cape Canaveral.

(c) COTP Jacksonville, Florida, closes the security zone, or specific portions of it, by means of locally promulgated notices. The closing of the area is signified by the display of a red ball from a 90-foot pole near the shoreline at approximately 28°35′ 00″ N., 80°34′ 36″ W., and from a 90-foot pole near the shoreline at approximately 28°25′ 18″ N., 80°35′ 00″ W. Appropriate Local Notices to Mariners will also be broadcast on 2670 KHZ.

[CGD 79–034, 47 FR 29660, July 8, 1982, as amended by CGD 7–82–10, 48 FR 11696, Mar. 21, 1983; USCG–1998–3799, 63 FR 35532, June 30, 1998]

§ 165.703 Tampa Bay, Florida—Safety Zone.

(a) A floating safety zone is established consisting of an area 1000 yards fore and aft of a loaded anhydrous ammonia vessel and the width of the channel in the following areas:

(1) For inbound tank vessels loaded with anhydrous ammonia, Tampa Bay Cut ''F'' Channel from Lighted Buoys ''3F'' and ''4F'' north through and including Gadsden Point Cut Lighted Buoy ''3'' and commencing at Gadsden Point Cut Lighted Buoys ''7'' and ''8'' north and including Hillsborough Cut ''C'' Channel.

(i) For vessels bound for R. E. Knight Pier at Hookers Point the safety zone includes, in addition to the area in paragraph (a)(1) of this section, Hillsborough Cut ''D'' Channel to the southern tip of Harbor Island.

(ii) For vessels bound for the anhydrous ammonia receiving terminals to Port Sutton the safety zone includes, in addition to the area in paragraph (a)(1) of this section, Port Sutton Channel.

(2) For outbound tank vessels loaded with anhydrous ammonia the safety zone is established when the vessel departs the receiving terminal and continues through the area described in paragraph (a)(1) of this section.

(3) The floating safety zone is disestablished when the anhydrous ammonia carrier is safely moored at the anhydrous ammonia receiving facility.

(b) A safety zone is established which extends 150 feet waterside from an anhydrous ammonia vessel while it is moored at the receiving facilities at R. E. Knight on Hookers Point and W. R. Grace and International Metals and Chemicals at Port Sutton. Any vessels desiring to enter the safety zone must obtain authorization from the Captain of the Port Tampa. Vessels transiting in the vicinity of the safety zone should do so with as slow a speed as conditions permit.

(c) The general regulations governing safety zones contained in § 165.23 apply.

(d) The Marine Safety Office Tampa will notify the maritime community of periods during which these safety zones will be in effect by providing advance notice of scheduled arrivals and departures of loaded anhydrous ammonia vessels via a marine broadcast Notice to Mariners.

(e) Should the actual time of entry of the anhydrous ammonia vessel into the safety zone vary more than one half

hour from the scheduled time stated in the broadcast Notice to Mariners, the person directing the movement of the anhydrous ammonia vessel shall obtain permission from Captain of the Port Tampa before commencing the transit.

(f) Prior to commencing the movement, the person directing the movement of the anhydrous ammonia vessel shall make a security broadcast to advise mariners of the intended transit. All additional security broadcasts as recommended by the U.S. Coast Pilot 5, ATLANTIC COAST shall be made through the transit.

(g) Vessels carrying anhydrous ammonia are permitted to enter and transit Tampa Bay and Hillsborough Bay and approaches during daylight hours only with a minimum of three miles visibility.

(h) The Captain of the Port Tampa may waive any of the requirements of this subpart for any vessel upon finding that the vessel or class of vessel, operational conditions, or other circumstances are such that application of this subpart is unnecessary or impractical for purposes of port safety or environmental safety.

(i) The owner, master, agent or person in charge of a vessel or barge, loaded with anhydrous ammonia shall report the following information to the Captain of the Port, Tampa at least twenty-four hours before entering Tampa Bay or its approaches or departing from Tampa Bay:

(1) Name and country of registry of the vessel or barge;

(2) The name of the port or place of departure;

(3) The name of the port or place of destination:

(4) The estimated time that the vessel is expected to begin its transit of Tampa Bay and the time it is expected to commence its transit of the safety zone.

(5) The cargo carried and amount.

[CGD7–85–32, 51 FR 28382, Aug. 7, 1986 as amended by CGD07–87–07, 52 FR 31763, Aug. 24, 1987]

§ 165.704 Tampa Bay, Florida, Safety Zone.

(a) A floating safety zone is established consisting of an area 500 yards fore and aft of a loaded liquefied petroleum gas (LPG) vessel and the width of Tampa Bay Cut ''J'' channel from buoy ''10J'' (LLNR 1589) north and including Tampa Bay Cut ''K'' Channel to buoy ''11K'' (LLP 117). Vessels are not permitted to meet or pass the loaded LPG vessel when it transits these channels.

(b) When a loaded LPG vessel departs the marked channel at Tampa Bay Cut ''K'' buoy ''11K'' (LLP 117) enroute to Rattlesnake slip, Tampa, FL. the floating safety zone extends 500 yards in all directions surrounding the loaded LPG vessel, until it arrives at the entrance to Rattlesnake slip. While the loaded LPG vessel is maneuvering in the slip and until it is safely moored at Warren Petroleum, Rattlesnake slip the floating safety zone extends 150 feet fore and aft of the loaded LPG vessel and the width of the slip. Moored vessels are allowed within the parameters of the 150 foot safety zone.

(c) The floating safety zone is disestablished when the LPG vessel is safely moored at the LPG receiving facility at Warren Petroleum, Rattlesnake slip.

(d) A fixed safety zone is established when an LPG vessel is safely moored at Warren Petroleum, extending 50 feet waterside from the vessel. Vessels are permitted to pass the moored LPG vessel; so long as they do not enter the fixed safety zone, and proceed only with extreme caution at the slowest safe speed possible. Vessels may not enter the fixed safety zone without the permission of the Captain of the Port Tampa.

(e) For an outbound vessel loaded with LPG, the floating safety zone is established when the vessel departs from the receiving facility and continues through the areas described in (a) and (b) above.

(f) The general regulations governing safety zones contained in § 165.23 apply.

(g) The Marine Safety Office Tampa will notify the maritime community of periods during which these safety zones will be in effect by providing advance notice of scheduled arrivals and departures of loaded LPG vessels via a marine broadcast Notice to Mariners.

(h) The owner, master, agent or person in charge of a vessel or barge, loaded with LPG shall report the following information to the Captain of the Port,

Tampa at least twenty-four hours before entering Tampa Bay or its approaches:

(1) Name and country of registry of the vessel or barge;

(2) The name of the port or place of departure;

(3) The name of the port or place of destination;

(4) The estimated time that the vessel is expected to begin its transit of Tampa Bay and the time it is expected to commence its transit of the safety zone.

(5) The cargo carried and amount.

(i) Should the actual time of entry of the LPG vessel into the safety zone area vary more than one half (½) hour from the scheduled time stated in the broadcast Notice to Mariners, the person directing the movement of the LPG vessel shall obtain permission from the Captain of the Port Tampa before commencing the transit.

(j) Prior to commencing the movement, the person directing the movement of the LPG vessel shall make a security broadcast to advise mariners of the intended transit. All additional security broadcasts as recommended by the U.S. Coast Pilot 5 Atlantic Coast shall be made throughout the transit.

(k) Vessels carrying LPG are permitted to enter and transit Tampa Bay and approaches only with a minimum of three miles visibility.

(l) The Captain of the Port Tampa may waive any of the requirements of this support for any vessel or class of vessel upon finding that the operational conditions of a vessel or class of vessels, or other circumstances are such that application of this subpart is unnecessary or impractical for the purposes of port safety or environmental safety.

[CCGD7–86–06, 52 FR 2690, Jan. 26, 1987]

§165.T0704 Safety Zone: Savannah River, Savannah, Georgia.

(a) *Location*. The following area is a safety zone: Two hundred foot radius around Garden City Terminal, approximate position 32 degrees 8 minutes, N, 81 degrees 9.5 minutes W, and around all cargo ships loaded with military equipment and transiting the Savannah River.

(b) *Effective dates.* This regulation becomes effective at 12 p.m. 14 December 1990 until terminated by the Captain of the Port, Savannah, GA.

(c) *Regulation*. In accordance with the general regulations in §165.23 of this part, entry into the zone is subject to the following requirements.

(1) All persons and vessels in the vicinity of the safety zone shall immediately obey any direction or order of the Captain of the Port or a representative of the Captain of the Port.

(2) The ''representative of the Captain of the Port'' is any Coast Guard commissioned, warrant or petty officer who has been designated by the Captain of the Port, Savannah, GA to act on his behalf. A representative of the Captain of the Port may be contacted on board any Coast Guard vessel assigned to enforce the safety zone.

(3) Before entering the safety zone, a vessel operator shall contact the Captain of the Port or a representative of the Captain of the Port to determine what restrictions, if any, have been imposed on vessels in the safety zone. The Captain of the Port may be contacted by telephone via the Command Duty Officer at (912) 944–4371. Coast Guard vessels assisting in the enforcement of the safety zone may be contacted on VHF–FM channels 13 or 16, or vessel operators may determine restrictions in effect for the safety zone by coming alongside a Coast Guard vessel patrolling the perimeter of the safety zone.

(4) The Captain of the Port will issue a Marine Safety Information Broadcast Notice to Mariners to Notify the maritime community of the safety zone and restrictions imposed.

[Reg. 90–129, 55 FR 52272, Dec. 21, 1990]

EFFECTIVE DATE NOTE: At 55 FR 52272, Dec. 21, 1990, §165.T0704 was added. This is an emergency temporary rule and will remain in effect until terminated by the Captain of the Port Savannah, GA.

§165.705 Port Canaveral Harbor, Cape Canaveral, Florida.

(a) Security Zone A—East (Trident) Basin, Port Canaveral Harbor, at Cape Canaveral Air Force Station, Brevard County, Florida. All waters of the East Basin north of latitude 28°24′36′′N.

(b) Security Zone B—Middle Basin, Port Canaveral Harbor, adjacent to the

Navy wharf at Cape Canaveral Air Force Station, Brevard County, Florida. The waters of Port Canaveral Harbor within a line circumscribing the water approaches to the Navy wharf along the northeasterly edge of the Port Canaveral Harbor turning basin at a distance of 200 feet from all portions of the wharf including the dolphins located 200 feet off the northwest end and 75 feet off the southeast end of the wharf.

(c) Entrance into these zones by vessels other than vessels owned or leased by the United States is prohibited without permission of the Captain of the Port, Jacksonville, Florida.

(d) The general regulations governing security zones contained in 33 CFR 165.33 apply.

[CGD7 87–38, 53 FR 38718, Oct. 3, 1988; CGD7 87–38, 54 FR 611, Jan. 9, 1989; CGD7 89–21, 54 FR 26198, June 22, 1989]

§ 165.708 Safety/Security Zone; Charleston Harbor and Cooper River, Charleston, SC.

(a) *Regulated area.* The following boundaries are established as a safety and security zone during specified conditions:

(1) All waters 200 yards ahead and astern and 100 yards to each side of a vessel transporting nuclear materials while the vessel transits from Charleston Harbor Entrance Buoy ''C'' (LLNR 1885, position 32–39.6N, 079–40.9W) to the Charleston Naval Weapons Station (position 32–55.4N, 079–56.0W) on the Cooper River. All coordinates referenced use datum: NAD 1983.

(2) All waters within 100 yards of the vessel described in paragraph (a)(1) of this section while the vessel is conducting cargo operations at the Charleston Naval Weapons Station.

(b) Captain of the Port Charleston will announce the activation of the safety/security zones described in paragraph (a) of this section by Broadcast Notice to Mariners. The general regulations governing safety and security zones contained in §§ 165.23 and 165.33 apply.

[COTP Charleston 96–034, 61 FR 68156, Dec. 27, 1996]

§ 165.711 Safety Zone: Port Everglades, Fort Lauderdale, FL.

(a) *Regulated Area.* A moving safety zone is established in the following area:

(1) The waters around naval aircraft carriers entering Port Everglades in an area 700 yards forward, 500 yards astern and 350 yards on either side of each vessel, beginning at the Port Everglades Sea Buoy in approximate position 26°05.5′N, 80°04.8′W and continuing until the vessel is safely moored in approximate position 26°04.9′N, 80°06.9′W. All coordinates referenced use datum: NAD 83.

(2) The waters around naval aircraft carriers departing Port Everglades in an area 700 yards forward, 500 yards astern and 350 yards on either side of each vessel beginning at the Pier in approximate position 26°04.9′N, 80°06.9′W, and continuing until the stern passes the Port Everglades Sea Buoy, in approximate position 26°05.5′N, 80°04.8′W. All coordinates referenced use datum: NAD 83.

(b) *Regulations.* (1) No person or vessel may enter, transit, or remain in the safety zone unless authorized by the Captain of the Port, Miami, Florida, or a Coast Guard commissioned, warrant, or petty officer designated by him.

(2) Vessels encountering emergencies which require transit through the moving safety zone should contact the Coast Guard patrol craft on VHF Channel 16. In the event of an emergency, the Coast Guard patrol craft may authorize a vessel to transit through the safety zone with a Coast Guard designated escort.

(3) All persons and vessels shall comply with the instructions of on-scene patrol personnel. On-scene patrol personnel include commissioned, warrant, or petty officers of the U.S. Coast Guard. Coast Guard Auxiliary and local or state officials may be present to inform vessel operators of this regulation and other applicable laws.

[COTP MIAMI 96–054, 62 FR 32201, June 13, 1997]

§ 165.713 Safety Zone, Ashley River, Charleston, South Carolina.

(a) *Location.* The following area is a safety zone: An area in the Ashley River across its entire width along the

river frontage of Brittlebank Park from the upper/northern U.S. highway 17 Bascule Bridge to red nun buoy ''6'', centering at Latitude 32°47.2′N. Longitude 78°57.8′W. The fireworks will be launched from a barge moored in the Ashley River.

(b) *Effective Date.* The safety zone becomes effective on July 4 each year at 8 p.m. EDT. It terminates at the conclusion of the fireworks display at approximately 10:30 p.m. EDT, on July 4 each year, unless sooner terminated by the Captain of the Port.

(c) *Regulation.* In accordance with the general regulations in §165.23 of this part, entry into this zone is prohibited unless authorized by the Captain of the Port, Charleston, South Carolina.

[COTP Charleston Reg. 91–13, 56 FR 30508, July 3, 1991, as amended by USCG–1998–3799, 63 FR 35532, June 30, 1998]

§165.T07–013 Security Zone: Internal waters and territorial seas adjacent to the Florida peninsula.

(a) *Location.* The following area is established as a security zone: All U.S. internal waters and territorial seas adjacent to the State of Florida south of the Florida-Georgia border and extending seaward three nautical miles from the baseline from which the territorial sea is measured around the Florida peninsula to the extent where the Florida panhandle and adjacent internal waters and territorial sea intersect with longitude 83°50′ West. In general these are the U.S. internal waters and territorial seas adjacent to the Florida peninsula.

(b) *Applicability.* This section applies to non-public vessels less than 50 meters (165 feet) in length and all associated auxiliary vessels within the security zone, but shall not apply to foreign flagged vessels in innocent passage in the territorial sea of the United States. For the purpose of this section, an ''auxiliary vessel'' includes every description of watercraft or other artificial contrivance used or capable of being used as a means of transportation on water attached to, or embarked in, another vessel to which this section applies.

(c) *Regulations.* (1) The general regulations in §165.33 of this part do not apply to this security zone.

(2) Non-public vessels less than 50 meters (165 feet) in length and persons on board those vessels may not get underway from a berth, pier, mooring or anchorage in the security zone, or depart from the security zone, with the intent to enter Cuban territorial waters without express written authorization from one of the following officials or their designees; Commander, Seventh Coast Guard District; the Captain of the Port Miami; or the Captain of the Port Tampa. The aforementioned officials may issue orders to control the movement of vessels to which this section applies.

(3) Where there is an articulable basis to believe a vessel to which this section applies intends to enter Cuban territorial waters, an official referenced in paragraph (c)(2) of this section may require the master, owner, or person in charge of a vessel within the security zone, including all auxiliary vessels, to provide verbal assurance that the vessel will not enter Cuban territorial waters as a condition for a vessel to get underway from a berth, pier, mooring, or anchorage in the security zone, or depart from the security zone. In addition, an official referenced in paragraph (c)(2) may require the master, owner, or person in charge of the vessel to identify all persons on board the vessel and provide verbal assurances that all persons on board have received actual notice of the regulations in this section.

(4) The owner or person in charge of the vessel shall maintain the express written authorization for the vessel on board the vessel.

(d) *Enforcement.* (1) Vessels or persons violating this section may be subject to:

(i) Seizure and forfeiture of the vessel;

(ii) A monetary penalty of not more than $10,000; and

(iii) Imprisonment for not more than 10 years.

(2) Violation of 18 U.S.C. 1001 may result in imprisonment for not more than five years or a fine, or both.

(e) This section implements Presidential Proclamation No. 6867. This section is issued under the authority

delegated in Department of Transportation Order No. 96–3–7.

[CGD07–96–013, 62 FR 25391, May 14, 1997, CGD07–98–006, 63 FR 38477, July 17, 1998]

EFFECTIVE DATE NOTE: By CGD07–98–006, 63 FR 38477, July 17, 1998, § 165.T07–013 was amended by revising the heading and paragraph (a). This is an emergency temporary rule and will terminate when the National Emergency as declared by the President in Presidential Proclamation No. 6867 terminates.

§ 165.714 Regulated Navigation Area; Atlantic Ocean, Charleston, SC.

(a) *Location.* The following area is a Regulated Navigation Area: A trapezoid at the water surface, and the entire water column from surface to seabed inclusive of the vessel, bounded by the following four coordinates:

	Latitude	Longitude
Western boundary.	32°42′ 56″ N	79°47′ 34″ W
Southern boundary.	32°42′ 32″ N	79°46′ 42″ W
Eastern boundary.	32°43′ 26″ N	79°45′ 27″ W
Northern boundary.	32°43′ 56″ N	79°46′ 08″ W

(NAD 83)

(b) *Regulations.* In accordance with the general regulations in § 165.23 of this part, all vessels and persons are prohibited from anchoring, diving, laying cable or conducting salvage operations in this zone except as authorized by the Captain of the Port.

[CGD 07–95–054, 60 FR 45047, Aug. 30, 1995]

§ 165.720 Safety/Security Zone: St. Johns River, Jacksonville, FL.

(a) *Location.* The water and the land within the following boundaries are established as a safety and security zone during specified conditions:

(1) All waters within 200 yards of Blount Island, Jacksonville, Florida and all adjacent land within 100 yards of the island shoreline during staging of Department of Defense equipment and during the loading/unloading of military supply vessels.

(2) All waters within 200 yards of ''any'' waterfront facility at which a laden military vessel is located and all land at the facility, including docks and piers, within 100 yards of the St. Johns River.

(3) All waters within 200 yards of any specified military supply vessel during its transit of the St. Johns River and out to three (3) nautical miles offshore.

(b) *Regulations.* (1) For public notice, the zone described in paragraph (a)(1) of this section is effective beginning 11 December 1990 and will remain in force until cancelled by the Captain of the Port Jacksonville, Florida.

(2) The COTP Jacksonville may activate, as necessary, any portion of the safety/security zone described in paragraphs (a)(2) and (a)(3) of this section by means of locally promulgated broadcast notice to mariners. Once implemented, neither overtaking nor meeting situations will be allowed during specified vessel transits.

(3) In accordance with the general regulations governing safety and security zones contained in 33 CFR 165.23 and 165.33 of this part, entry into any portion of the described zone is prohibited unless authorized by the Captain of the Port Jacksonville, Florida.

(4) This regulation does not apply to authorized law enforcement agencies operating within the safety/security zone.

[COTP Jacksonville, FL Reg. 90–124, 55 FR 51700, Dec. 17, 1990]

§ 165.721 Safety Zone: St. Johns River, Jacksonville, FL.

(a) *Location.* The following area is established as a safety zone during the specified conditions: The waters within a 500 yard radius of the fireworks barge or barges during the storage, preparation, and launching of fireworks in the St. Johns River between the Hart and Acosta Bridges.

(b) *Effective dates.* This section becomes effective upon activation by the Captain of the Port by the broadcasting of a local Notice to Mariners on appropriate VHF–FM radio frequencies. It terminates at the conclusion of the fireworks display unless terminated earlier by the Captain of the Port.

(c) *Regulations.* (1) In accordance with the general regulations in 165.23 of this part, anchoring, mooring or transiting in this zone is prohibited unless authorized by the Captain of the Port or District Commander.

(2) This regulation does not apply to authorized law enforcement agencies operating within the Safety Zone.

[COTP Jacksonville Reg. 94–027, 59 FR 55584, Nov. 8, 1994]

§ 165.722 Security Zone: St. Johns River, Jacksonville, Florida.

(a) Location. The water located within the following area is established as a security zone: beginning at the shoreline of the St. Johns River at the northernmost property line of Naval Air Station Jacksonville next to Timuquana Country Club, at 30°14′ 39.5″ N, 81°40′ 45″ W; thence northeasterly to 30°14′ 42″ N, 81°40′ 42″ W; thence south remaining 400 feet from the shoreline at mean high water; thence past Piney Point and Black Point to the northern edge of Mulberry Cover Manatee refuge, 400 feet from Naval Air Station Jacksonville boat ramp, at 30°13′ 00″ N, 81°40′ 23.5″ W; thence southwesterly in a straight line to position 30°12′ 14″ N, 81°40′ 42″ W; thence southerly, remaining 400′ seaward of the mean high water shoreline to 30°11′ 40″ N, 81°41′ 15.5″ W; thence northwest to the point at the end of the property line of Naval Air Station Jacksonville just north of the Buckman Bridge at position 30°11′ 42.30″ N, 81°41′ 23.66″ W; thence northeasterly along the mean high water shoreline of the St. Johns River and Mulberry Cove to the point of beginning. Datum: NAD 83

(b) In accordance with the general regulations in § 165.33 of this part, no person or vessel may enter or remain in the zone without the permission of the Captain of the Port Jacksonville, Florida. All other portions of § 165.33 remain applicable.

(c) This regulation does not apply to Coast Guard vessels and authorized law enforcement vessels operating within the Security Zone.

[COTP Jacksonville Reg. 93–115, 60 FR 65571, Dec. 20, 1995]

§ 165.726 Regulated Navigation Areas; Miami River, Miami, Florida.

(a) *Location*. The following are Regulated Navigation Areas:

(1) All the waters of the Miami River, Miami, Florida, from the Brickell Avenue Bridge, in approximate position 25°46′19″ N, 80°11′4″ W, inland to the South Florida Water Management District's salinity dam in approximate position 25°48′4″ N, 80°15′6″ W.

(2) The Tamiami Canal from its intersection with the Miami river in approximate position 25°47′7″ N, 80°14′7″ W to the N.W. 37th Avenue bridge in approximate position 25°48′5″ N, 80°15′5″ W. All coordinates referenced use datum: NAD 83.

(b) *Regulations*. The restrictions in this paragraph apply to vessels operating within the regulated navigation areas in paragraph (a) of this section unless authorized to deviate by the Captain of the Port, Miami, Florida, or a Coast Guard commissioned, warrant, or petty officer designated by him.

(1) All rafted vessels (inboard and outboard) must be properly moored in accordance with applicable municipal laws and regulations.

(2) At no time shall any vessels be rafted more than two abreast.

(3) Neither single nor rafted vessels shall extend greater than 54 feet into the main river (measured from the dock) without permission of the Captain of the Port.

(4) A minimum channel width of 65 feet shall be maintained at all times on the Miami River from the Brickell Avenue Bridge west to the Tamiami Canal. A minimum channel width of 45 feet shall be maintained at all times on the Miami River west of the junction of the Miami River and the Tamiami Canal to the South Florida Water Management District's salinity dam, as well as on the Tamiami Canal from its mouth to the N.W. 37th Avenue Bridge.

(5) All moored and rafted vessels shall provide safe access from the shore.

(6) All moored and rafted vessels shall provide clear and ready access for land-based firefighters to safely and quickly reach outboard rafted vessels.

(7) No vessels shall moor or raft in any manner as to impede safe passage of another vessel to any of the tributaries of the Miami River.

(8) Nothing in these regulations shall prohibit the U.S. Army Corps of Engineers from requiring the relocation or movement of vessels in a declared flood emergency.

(c) *Enforcement*. Violations of these regulated navigation areas should be

reported to the Captain of the Port, Miami. Persons in violation of these regulations will be subject to civil penalty under § 165.13(b) of this part.

[CGD07–97–019, 62 FR 50512, Sept. 26, 1997]

§ 165.728 Jacksonville, Florida—safety zones.

(a) The water, land, and land and water within the following boundaries are established as safety zones during the specified conditions:

(1) *Zone A.* 200 yards in all directions around any specified Maritime Prepositioned Ship as it transits between the St. Johns River entrance sea buoy (STJ) and its berth inside the Mayport Basin (Ribault Bay), Mayport, Florida. The prescribed safety zone will also be in effect as the vessel transits to its berth at Blount Island Marine Terminal, Jacksonville, Florida.

(2) *Zone B.* 100 yards in all directions on land and 200 yards on water from the eastern end of Transit Shed #2 to the east shore of Alligator Creek at Blount Island Terminal, Jacksonville, Florida.

(3) Zone C: 100 yards in all directions on land from Gate berth #1 and all waters within the Back River (locally known as the Gate Slip) on Blount Island, Jacksonville, Florida, commencing from a line drawn between the southwesterly most shore point latitude 30°23′ 34″, longitude 81°30′ 52″ and the southeasterly most shore point latitude 30°23′ 38″, longitude 81°30′ 36″.

(b) The areas described in paragraph (a) of this section may be closed to all vessels and persons, except those vessels and persons authorized by the Commander, Seventh Coast Guard District or the Captain of the Port, Jacksonville, Florida, whenever specified Maritime Prepositioned Ships are transiting the St. Johns River (Zone A), moored at Blount Island (Zone B), or moored at Gate Terminal (Zone C).

(c) The general regulations governing safety zones contained in 33 CFR 165.23 apply.

(d) The Captain of the Port Jacksonville, Florida will activate the safety zones or specific portions of them by issuing a local broadcast notice to mariners. The closing of the area at Blount Island, described above, will be signified by the display of a rotating yellow light located on the waterfront at Blount Island Marine Terminal or at the Gate Terminal Berth #1.

[CGD7 87–15, 52 FR 23442, June 22, 1987, as amended by CGD7 91–33, 56 FR 22826, May 17, 1991]

§ 165.729 Jacksonville Harbor, Florida—security zone.

(a) The water, land, and land and water within the following boundaries are established as security zones during the specified conditions:

(1) *Zone A.* 200 yards in all directions around any specified Maritime Prepositioned Ship as it transits between the St. Johns River entrance sea buoy (STJ) and its berth inside the Mayport Naval Basin (Ribault Bay), Mayport, Florida. The prescribed security zone will also be in effect as the vessel transits to its berth at Blount Island Marine Terminal, Jacksonville, Florida.

(2) *Zone B.* 100 yards in all directions on land and 200 yards on water from the eastern end of Transit Shed #2 to the east shore of Alligator Creek at Blount Island Terminal, Jacksonville, Florida.

(3) Zone C: 100 yards in all directions on land from Gate berth #1 and all waters within the Back River (locally known as the Gate Slip) on Blount Island, Jacksonville, Florida, commencing from a line drawn between the southwesterly most shore point latitude 30°23′ 34″, longitude 81°30′ 52″ and the southeasterly most shore point latitude 30°23′ 38″, longitude 81°30′ 36″.

(b) The areas described in paragraph (a) of this section shall be closed to all vessels and persons, except those vessels and persons authorized by the Commander, Seventh Coast Guard District or the Captain of the Port, Jacksonville, Florida, whenever specified Maritime Prepositioned Ships are transiting the St. Johns River (Zone A), moored at Blount Island (Zone B), or moored at Gate Terminal (Zone C).

(c) The general regulations governing security zones contained in 33 CFR 165.33 apply.

(d) The Captain of the Port Jacksonville, Florida will activate the security zones or specific portions of them by issuing a local broadcast notice to mariners. The closing of the area at

Blount Island, described above, will be signified by the display of a rotating yellow light located on the waterfront at Blount Island Marine Terminal or at the Gate Terminal Berth #1.

[CGD7 87–16, 52 FR 23443, June 22, 1987, as amended by CGD7 91–34, 56 FR 22827, May 17, 1991]

§ 165.730 King's Bay, Georgia—Regulated navigation area.

Vessels transiting in the water bounded by the line connecting the following points must travel no faster than needed for steerageway:

Latitude	*Longtitude*
30°48′ 00.0″ N	081°29′ 24.0″ W
30°46′ 19.5″ N	081°29′ 17.0″ W
30°47′ 35.0″ N	081°30′ 16.5″ W

and thence to the point of beginning

[CGD7 92–41, 58 FR 38057, July 15, 1993]

§ 165.731 Safety/Security Zone: Cumberland Sound, Georgia and St. Marys River Entrance Channel.

(a) *Location.* A permanent safety/security zone is established within the following coordinates, the area enclosed by a line starting at

30°44′ 55″ N, 081°29′ 39″ W; thence to

30°44′ 55″ N, 081°29′ 18″ W; thence to

30°46′ 35″ N, 081°29′ 18″ W; thence to

30°47′ 02″ N, 081°29′ 34″ W; thence to

30°47′ 21″ N, 081°29′ 39″ W; thence to

30°48′ 00″ N, 081°29′ 42″ W; thence to

30°49′ 07″ N, 081°29′ 56″ W; thence to

30°49′ 55″ N, 081°30′ 35″ W; thence to

30°50′ 15″ N, 081°31′ 08″ W; thence to

30°50′ 14″ N, 081°31′ 30″ W; thence to

30°49′ 58″ N, 081°31′ 45″ W; thence to

30°49′ 58″ N, 081°32′ 03″ W; thence to

30°50′ 12″ N, 081°32′ 17″ W; thence following the land based perimeter boundary to the point of origin.

(b) A temporary safety/security zone, when activated by the Captain of the Port, Jacksonville, Florida, encompasses all waters and land from bank to bank within Cumberland Sound and the St. Marys Entrance Channel: the northern extent of this zone starts at the southern tip of Crab Island; lighted buoy number ″1″ at the mouth of the Amelia River demarks the southern boundary; day marker number ″2″ at the mouth of the St. Marys River indicates the western boundary; and the eastern boundary extends out to three (3) nautical miles in the Atlantic Ocean, with the zone also encompassing the waters within 1000 yards of the entrance channel east of the jetties.

(c) *Regulations.* (1) The Captain of the Port, Jacksonville, Florida will activate the temporary safety/security zone described in paragraph (b) of this section by issuing a local broadcast notice to mariners.

(2) All persons and vessels in the vicinity of the safety/security zone shall immediately obey any direction or order of the Captain of the Port, Jacksonville, Florida.

(3) The general regulations governing safety and security zones contained in 33 CFR 165.23 and .33 apply. No person or vessel may enter or remain within the designated zones without the permission of the Captain of the Port, Jacksonville, Florida.

(4) This regulation does not apply to persons or vessels operating under the authority of the United States Navy nor to authorized law enforcement agencies.

[COTP Jacksonville Reg. 90–94, 55 FR 42374, Oct. 19, 1990]

§ 165.735 Brunswick, Georgia, Turtle River, Vicinity of Sydney Lanier Bridge.

Except during the flood tide, every vessel over 500 GRT departing the Port of Brunswick for sea shall do so only from the Turtle River, so as to be shaped up for bridge transit:

(a) Before reaching Turtle River Buoy ''1'' (Light List Number 6050); or,

(b) Before reaching the intersection of Brunswick Harbor Range and Turtle River Lower Range, provided that the vessel:

(1) Be equipped with an operable bow thruster or have tug assistance; and

(2) Be stopped and maneuvered with no appreciable way on until aligned with the centerline axis of the Turtle River Channel.

[CGD7 87–27, 52 FR 48811, Dec. 28, 1987]

§ 165.752 Sparkman Channel, Tampa, Florida—regulated navigation area.

(a) A regulated navigation area is established to protect vessels from limited water depth in Sparkman Channel caused by an underwater pipeline. The regulated navigation area is in Sparkman Channel between the lines connecting the following points (referenced in NAD 83):

	Latitude	Longitude		Latitude	Longitude
1:	27°56′20.5″N	082°26′42.0″W	to	27°56′19.3″N	82°26′37.5″W
2:	27°55′32.0″N	082°26′54.0″W	to	27°55′30.9″N	82°26′49.1″W

(b) Ships requiring Federal or State pilotage shall not meet or overtake other like vessels in Sparkman Channel.

(c) Vessels having a draft of more than 35.5 feet may not transit Sparkman Channel.

(d) Vessels having a draft of 34.5 feet, but not over 35.5 feet, may transit Sparkman Channel only when the tide is at least one foot above mean low water.

(e) Vessels with a draft of 30 feet or greater shall transit as near as possible to the center of the channel.

[CGD7 90–52, 56 FR 36005, July 30, 1991, as amended by USCG–1998–3799, 63 FR 35532, June 30, 1998]

§ 165.753 Regulated navigation area; Tampa Bay, Florida.

(a) The following is a regulated navigation area (RNA): All the navigable waters of Tampa Bay, Hillsborough Bay and Old Tampa Bay, including all navigable waterways tributary thereto. Also included are the waters of Egmont Channel, Gulf of Mexico from Tampa Bay to the seabuoy, Tampa Lighted Whistle Buoy T, LLNR 18465.

(b) The master, pilot, or person in charge of any vessel of 50 meters or greater shall give a Navigational Advisory Broadcast in accordance with 47 CFR 80.331 on VHF–FM channel 13 at the following broadcast/reporting points:

(1) Prior to getting underway from any berth or anchorage;

(2) Prior to entering Egmont Channel from seaward;

(3) Prior to passing Egmont Key in any direction;

(4) Prior to transiting the Skyway Bridge in either direction;

(5) Prior to transiting the intersection of Tampa Bay Cut F Channel, Tampa Bay Cut G Channel, and Gadsden Point Cut Channel;

(6) Prior to anchoring or approaching a berth for docking;

(7) Prior to tending hawser;

(8) Prior to transiting Point Pinellas Channel Light 1 in either direction.

(c) Each Navigational Advisory required by this section shall be made in the English language and will contain the following information:

(1) The words ''Hello all vessels, a Navigational Advisory follows'';

(2) Name of vessel;

(3) If engaged in towing, the nature of the tow;

(4) Direction of Movement;

(5) Present location; and,

(6) The nature of any hazardous conditions as defined by 33 CFR 160.203.

(d) Nothing in this section shall supersede either the International Regulations for Preventing Collisions at Sea, 1972 (72 COLREGS) or the Inland Navigation Rules, as applicable, or relieve the Master or person in charge of the vessel of responsibility for the safe navigation of the vessel.

[CGD07–94–094, 60 FR 58519, Nov. 28, 1995]

§ 165.754 Safety Zone: San Juan Harbor, San Juan, PR.

(a) *Regulated Area.* A moving safety zone is established in the following area:

(1) The waters around Liquefied Petroleum Gas ships entering San Juan Harbor in an area one half mile around each vessel, beginning one mile north of the San Juan Harbor #1 Sea Buoy, in approximate position 18–29.3N, 66–07.6W and continuing until the vessel is safely moored at either the Gulf Refinery

Oil dock or the Catano Oil dock in approximate position 18–25.8N, 66–06.5W. All coordinates referenced use datum: NAD 83.

(2) The waters around Liquefied Petroleum Gas ships departing San Juan Harbor in an area one half mile around each vessel beginning at either the Gulf Refinery Oil dock or Catano Oil dock in approximate position 18–25.8N, 66–06.5W when the vessel gets underway, and continuing until the stern passes the San Juan Harbor #1 Sea Buoy, in approximate position 18–28.3N, 66–07.6W. All coordinates referenced use datum: NAD 83.

(b) *Regulations.* (1) No person or vessel may enter, transit or remain in the safety zone unless authorized by the Captain of the Port, San Juan, Puerto Rico, or a designated Coast Guard commissioned, warrant, or petty officer.

(2) Vessels encountering emergencies which require transit through the moving safety zone should contact the Coast Guard patrol craft on VHF Channel 16. In the event of an emergency, the Coast Guard patrol craft may authorize a vessel to transit through the safety zone with a Coast Guard designated escort.

(3) The Captain of the Port and the Duty Officer at Marine Safety Office, San Juan, Puerto Rico, can be contacted at telephone number (787) 729–6800 ext. 140. The Coast Guard Patrol Commander enforcing the safety zone can be contacted on VHF–FM channels 16 and 22A.

(4) The Marine Safety Office San Juan will notify the marine community of periods during which these safety zones will be in effect by providing advance notice of scheduled arrivals and departures of Liquefied Petroleum Gas vessels via a marine broadcast Notice to Mariners.

(5) Should the actual time of entry of the Liquefied Petroleum Gas vessel vary more than one half hour from the scheduled time stated in the broadcast Notice to Mariners, the person directing the movement of the Liquefied Petroleum Gas vessel shall obtain permission from Captain of the Port San Juan before commencing the transit.

(6) All persons and vessels shall comply with the instructions of on-scene patrol personnel. On-scene patrol personnel include commissioned, warrant, or petty officers of the U.S. Coast Guard. Coast Guard Auxiliary and local or state officials may be present to inform vessel operators of the requirements of this section, and other applicable laws.

[COTP SAN JUAN 97–045, 63 FR 27681, May 20, 1998]

EIGHTH COAST GUARD DISTRICT

§ 165.802 Lower Mississippi River, vicinity of Old River Control Structure—Safety Zone.

(a) The area enclosed by the following boundary is a safety zone—from the Black Hawk Point Light, mile 316.1 AHP LMR to a point opposite Ft. Adams Light, mile 311.5 AHP along the low water reference plane above the right descending bank; thence to the levee on a line perpendicular to the channel centerline; thence along the levee to the upstream end of the Old River Overbank structure; thence along a line to the Black Hawk Point Light.

(b) Any vessel desiring to enter this safety zone must first obtain permission from the Captain of the Port, New Orleans. The resident engineer at Old River Control Structure (WUG–424) is delegated the authority to permit entry into this safety zone.

[CGD8–87–10, 53 FR 15207, Apr. 28, 1988, as amended by CGD8 89–03, 54 FR 16108, Apr. 21, 1989]

§ 165.803 Mississippi River—regulated navigation area.

The following is a Regulated Navigation Area—The waters of the Mississippi River between miles 88 and 240 above Head of Passes.

(a) Definitions. As used in this section:

(1) *Breakaway* means a barge that is adrift and is not under the control of a towing vessel.

(2) *COTP* means the Captain of the Port, New Orleans.

(3) *Fleet* includes one or more tiers.

(4) *Fleeting facility* means the geographic area along or near a river bank at which a barge mooring service, either for hire or not for hire, is established.

(5) *Mooring barge* or *spar barge* means a barge moored to mooring devices and to which other barges may be moored.

(6) *Mooring device* includes a deadman, anchor, pile or other reliable holding apparatus.

(7) *Person in charge* includes any owner, agent, pilot, master, officer, operator, crewmember, supervisor, dispatcher or other person navigating, controlling, directing or otherwise responsible for the movement, action, securing, or security of any vessel, barge, tier, fleet or fleeting facility subject to the regulations in this section.

(8) *Tier* means barges moored interdependently in rows or groups.

(b) Waivers:

(1) The COTP may, upon written request, except as allowed in paragraph (3) of this subsection, waive any regulation in this section if it is found that the proposed operation can be conducted safely under the terms of that waiver.

(2) Each written request for a waiver must state the need for the waiver and describe the proposed operation.

(3) Under unusual circumstances due to time constraints, the person in charge may orally request an immediate waiver from the COTP. The written request for a waiver must be submitted within five working days after the oral request.

(4) The COTP may, at any time, terminate any waiver issued under this subsection.

(c) Emergencies. In an emergency, a person may depart from any regulation in this section to the extent necessary to avoid immediate danger to persons, property or the environment.

(d) Mooring: General.

(1) No person may secure a barge to trees or to other vegetation.

(2) No person may allow a barge to be moored with unraveled or frayed lines or other defective or worn mooring.

(3) No person may moor barges side to side unless they are secured to each other from fittings as close to each corner of abutting sides as practicable.

(4) No person may moor barges end to end unless they are secured to each other from fittings as close to each corner of abutting ends as practicable.

(e) *Mooring to a mooring device.* (1) A barge may be moored to mooring devices if the upstream end of that barge is secured to at least one mooring device and the downstream end is secured to at least one other mooring device, except that from mile 127 to mile 240 a barge may be moored to mooring devices if the upstream end of that barge is secured to at least one mooring device.

(2) Barges moored in tiers may be shifted to mooring devices if the shoreward barge at the upstream end of the tier is secured to at least one mooring device, and the shoreward barge at the downstream end of the tier is secured to at least one other mooring device, except that from mile 127 to mile 240 barges moored in tiers may be shifted to mooring devices if the shoreward barge at the upstream end of the tier is secured to at least one mooring device.

(3) Each wire rope used between the upstream end of a barge and a mooring device must have at least a diameter of 1¼ inch. Chain or line used between the upstream end of a barge and a mooring device must be at least equivalent in strength to 1¼ inch diameter wire rope.

(4) Each wire rope used between the downstream end of a barge and a mooring device must have at least a diameter of ⅞ inch. Chain or line used between the downstream end of a barge and a mooring device must be of at least equivalent strength of ⅞ inch diameter wire rope.

(f) Moorings: Barge-to-barge; barge-to-vessel; barge-to-wharf or pier. The person in charge shall ensure that a barge moored to another barge, a mooring or spar barge, a vessel, a wharf, or a pier, is secured as near as practicable to each abutting corner of the barge being moored by:

(1) Three parts of wire rope of at least ⅞ inch diameter with an eye at each end of the rope passed around the timberhead, caval, or button;

(2) A mooring of natural or synthetic fiber rope that has at least 75 percent of the breaking strength of three parts of ⅞ inch diameter wire rope; or

(3) Fixed rigging that is at least equivalent to three parts of ⅞ inch diameter wire rope.

(g) Mooring: Person in charge.

(1) The person in charge of a barge, tier, fleet or fleeting facility shall ensure that the barge, tier, fleet or fleeting facility meets the requirements in paragraphs (d) and (e) of this section.

(2) The person in charge shall ensure that all mooring devices, wires, chains, lines and connecting gear are of sufficient strength and in sufficient number to withstand forces that may be exerted on them by moored barges.

(h) Fleeting facility: inspection of moorings.

(1) The person in charge of a fleeting facility shall assign a person to inspect moorings in accordance with the requirements in paragraph (h)(2) of this section.

(2) The person assigned to inspect moorings shall inspect:

(i) At least twice each day during periods that are six hours or more apart, each mooring wire, chain, line and connecting gear between mooring devices and each wire, line and connecting equipment used to moor each barge; and

(ii) After a towboat adds barges to, withdraws barges from, or moves barges at a fleeting facility, each mooring wire, line, and connecting equipment of each barge within each tier affected by that operation.

(3) The person who inspects moorings shall take immediate action to correct each deficiency.

(i) Fleeting facility: Records. The person in charge of a fleeting facility shall maintain, and make available to the Coast Guard, records containing the following information:

(1) The time of commencement and termination of each inspection required in paragraph (h)(2) of this section.

(2) The name of each person who makes the inspection required in paragraph (h)(2) of this section.

(3) The identification of each barge entering and departing the fleeting facility, along with the following information:

(i) Date and time of entry and departure; and

(ii) The names of any hazardous cargo which the barge is carrying.

NOTE: The requirements in paragraph (i)(3) of this section for the listing of hazardous cargo refer to cargoes regulated by Subchapters D and O of Chapter I, Title 46, Code of Federal Regulations.

(j) Fleeting facility: Surveillance.

(1) The person in charge of a fleeting facility shall assign a person to be in continuous surveillance and to observe the barges in the fleeting facility. Joint use of this person by adjacent facilities may be considered upon submisssion of a detailed proposal for a waiver to the COTP.

(2) The person who observes the barges shall:

(i) Inspect for movements that are unusual for properly secured barges; and

(ii) Take immediate action to correct each deficiency.

(k) Fleeting facility: person in charge. The person in charge of a fleeting facility shall ensure that each deficiency found under the requirements of paragraph (h) or (j) of this section is corrected.

(l) Securing breakaways. The person in charge shall take immediate action to:

(1) Secure each breakaway; and

(2) Report each breakaway as soon as possible to the COTP by telephone, radio or other means of rapid communication.

(m) High water.

(1) This subsection applies to barges on the Mississippi River between miles 88 and 240 above Head of Passes when:

(i) The Carrollton gage stands 12 feet or more; or

(ii) The Carrollton gage stands 10 feet, the U.S. Army Corps of Engineers forecasts the Mississippi River is rising to 12 feet, and the District Commander determines these circumstances to be especially hazardous and issues orders directing that paragraphs (m)(2) and (3) of this section are in effect.

(2) During high water, the person in charge of a fleeting facility shall ensure compliance with the following requirements:

(i) Each fleet consisting of eight or more barges must be attended by at last one radar-equipped towboat for each 100 barges or less. Joint use of this towboat by adjacent facilities may be considered upon submission of a detailed proposal for a waiver.

(ii) Each fleet must have two or more towboats in attendance when:

(A) Barges are withdrawn from or moved within the fleet and the fleet at the start of the operation contains eight or more barges; or

(B) Barges are added to the fleet and the number of barges being added plus the fleet at the start of the operation total eight or more.

(iii) Each towboat required in paragraphs (m)(2)(i) and (2)(ii) of this section must be:

(A) Capable of safely withdrawing, moving or adding each barge in the fleet;

(B) Immediately operational;

(C) Radio-equipped;

(D) Within 500 yards of the barges; and

(iv) The person in charge of each towboat required in paragraphs (m)(2)(i) and (2)(ii) of this section shall maintain:

(A) A continuous guard on the frequency specified by current Federal Communications Commission regulations found in Part 83 of Title 47, Code of Federal Regulations; and

(B) When moored, a continuous watch on the barges in the fleeting facility.

(v) During periods when visibility is less than 200 yards, the person in charge of each towboat required in paragraph (m)(2)(i) of this subsection shall maintain, when moored, a continuous radar surveillance of the barges moored in the fleeting facility.

(3) During high water when visibility is reduced to less than 200 yards:

(i) Tows may not be assembled or disassembled;

(ii) No barge may be added to, withdrawn from or moved within a fleet except:

(A) A single barge may be added to or withdrawn from the channelward or downstream end of the fleet; and

(B) Barges made up in a tow may depart a fleet from the channelward or downstream end of the fleet; and

(iii) No person in charge of a tow arriving in this regulated navigation area may moor unless the COTP is notified prior to arrival in the regulated navigation area.

[CGD 79–034, 47 FR 29660, July 8, 1982, as amended by CGD 82–020, 47 FR 35483, Aug. 16, 1982; CGD 79–026, 48 FR 35408, Aug. 4, 1983; CGD 88–075, 54 FR 14958, Apr. 14, 1989; CGD08–94–006, 59 FR 21935, Apr. 28, 1994; CGD08–94–006, 60 FR 37944, July 25, 1995]

§ 165.804 Snake Island, Texas City, Texas; mooring and fleeting of vessels—safety zone.

(a) The following is a safety zone:

(1) The west and northwest shores of Snake Island;

(2) The Turning Basin west of Snake Island;

(3) The area of Texas City Channel from the north end of the Turning Basin to a line drawn 000° true from the northwesternmost point of Snake Island.

(b) Special regulations. All vessels are prohibited from mooring, anchoring, or otherwise stopping in the safety zone, except in case of an emergency.

(c) Barges are prohibited from fleeting or grounding in the zone.

(d) In an emergency, vessels shall advise the Captain of the Port, Galveston, of the nature of the emergency via the most rapid means available.

§ 165.805 Calcasieu Channel and Industrial Canal, Calcasieu River, Lake Charles, LA.

(a) The waters and waterfront facility located within the area described by the following boundaries constitutes a safety zone:

(1) When a Liquefied Natural Gas (LNG) vessel is moored at Trunkline LNG facility: Beginning at the west side property line at position 30°06′ 38″ N., 93°17′ 34″ W., a line extending in an eastward direction and 50 feet from shore to a point 50 feet west of mooring dolphin #1; then due south to a line running in an eastward direction and 50 feet south of the moored LNG vessel to a line running due north to a point 50 feet east of mooring dolphin #13; and then a line extending in an eastward direction and 50 feet from shore to the end of the turning basin.

(2) When an LNG vessel is not moored at the Trunkline LNG facility: Beginning at the west side property line at position 30°06′38″ N., 93°17′34″ W., a line extending in an eastward direction and 50 feet from shore to a point 50 feet west of mooring dolphin #1; then a continuous uniform line extending 50 feet outside of all facility docks and structures to a point 50 feet east of mooring dolphin #13; and then a line extending in an eastward direction and 50 feet from shore to the end of the turning basin.

(b) The waters within the following boundaries are a safety zone while a non-gas free LNG vessel is transiting within the Calcasieu River ship channel and between buoy ''CC'' and the Trunkline LNG facility: The area 2 miles ahead, 1 mile astern, and to either side of an LNG vessel to the width of the ship channel. Meeting, crossing, or overtaking situations are not permitted within the safety zone unless specifically authorized by the USCG Captain of the Port.

(c) Notice of transiting LNG vessels will be provided by Broadcast and/or Local Notice to Mariners.

[CGD 82–10, 47 FR 41957, Sept. 23, 1982, as amended by CGD8 82–10, 50 FR 31592, Aug. 5, 1985; COTP Port Arthur, TX Reg. 90–03, 56 FR 66599, Dec. 24, 1991; USCG–1998–3799, 63 FR 35533, June 30, 1998]

§ 165.806 Sabine Neches Waterway, Texas—regulated navigation area.

(a) The following is a regulated navigation area—The Sabine Neches Waterway which includes the following waters: Sabine Pass Channel, Port Arthur Canal, Sabine Neches Canal, Neches River, Sabine River and all navigable waterways tributary thereto.

(b) Unless otherwise authorized by the Captain of the Port, Port Arthur, Texas, tows on a hawser of 1000 gross tons or greater transiting the Sabine-Neches Waterway are prohibited unless such tows have a tug of sufficient horsepower made up to the tow in such a manner as to insure that complete and effective control is maintained throughout the transit. Inbound vessels only, may shift the tow or pick up an additional tug within 100 yards inside the entrance jetties provided that such action is necessary for reasons of prudent seamanship.

[CGD8–83–09, 49 FR 35500, Sept. 10, 1984]

§ 165.807 Calcasieu River, Louisiana—regulated navigation area.

(a) The following is a regulated navigation area—The Calcasieu River from the Calcasieu jetties up to and including the Port of Lake Charles.

(b) Unless otherwise authorized by the Captain of the Port, Port Arthur, Texas, tows on a hawser of 1000 gross tons or greater transiting the Calcasieu River are prohibited unless such tows have a tug of sufficient horsepower made up to the tow in such a manner as to insure that complete and effective control is maintained at all times. Inbound vessels only, may shift the tow or pick up an additional tug within 100 yards inside the entrance jetties provided that such action is necessary for reasons for prudent seamanship.

[CGD8–83–09, 49 FR 35500, Sept. 10, 1984]

§ 165.808 Corpus Christi Ship Channel, Corpus Christi, TX, safety zone.

(a) The following areas are established as safety zones during specified conditions:

(1) For incoming tank vessels loaded with Liquefied Petroleum Gas, the waters within a 500 yard radius of the LPG carrier while the vessel transits the Corpus Christi Ship Channel to the LPG receiving facility. The safety zone remains in effect until the LPG vessel is moored at the LPG receiving facility.

(2) For outgoing tank vessels loaded with LPG, the waters within a 500 yard radius of the LPG carrier while the vessel departs the LPG facility and transits the Corpus Christi Ship Channel. The safety zone remains in effect until the LPG vessel passes the seaward extremity of the Aransas Pass Jetties.

(b) The general regulations governing safety zones contained in 33 CFR 165.23 apply.

(c) The Captain of the Port will notify the maritime community of periods during which this safety zone will

be in effect by providing advance notice of scheduled arrivals and departures of loaded LPG vessels via a Marine Safety Information Broadcast Notice to Mariners.

[CGD 8–84–07, 50 FR 15744, Apr. 22, 1985; 50 FR 19933, May 13, 1985]

§ 165.810 Mississippi River, LA-regulated navigation area.

(a) *Purpose and applicability.* This section prescribes rules for all vessels operating in the Lower Mississippi River below mile 233.9 above Head of Passes including South Pass and Southwest Pass, to assist in the prevention of allisions; collisions and groundings so as to ensure port safety and protect the navigable waters of the Mississippi River from environmental harm resulting from those incidents, and to enhance the safety of passenger vessels moored or anchored in the Mississippi River.

(b) Lower Mississippi River below mile 233.9 above Head of Passes including South and Southwest Passes:

(1) *Supervision.* The use, administration, and navigation of the waterways to which this paragraph applies shall be under the supervision of the District Commander, Eighth Coast Guard District.

(2) *Speed; high-water precautions.* When passing another vessel (in motion, anchored, or tied up), a wharf or other structure, work under construction, plant engaged in river and harbor improvement, levees withstanding flood waters, building partially or wholly submerged by high water, or any other structure liable to damage by collision, suction or wave action, vessels shall give as much leeway as circumstances permit and reduce their speed sufficiently to preclude causing damages to the vessel or structure being passed. Since this subparagraph pertains directly to the manner in which vessels are operated, masters of vessels shall be held responsible for strict observance and full compliance therewith. During high river stages, floods, or other emergencies, the District Commander may prescribe by navigation bulletins or other means the limiting speed in land miles per hour deemed necessary for the public safety for the entire section or any part of the waterways covered by this paragraph, and such limiting speed shall be strictly observed.

(3) *Towing.* Towing in any formation by a vessel with insufficient power to permit ready maneuverability and safe handling is prohibited.

(c) Movement of vessels in vicinity of Algiers Point, New Orleans Harbor:

(1) *Control lights.* When the Mississippi River reaches 8 feet on the Carrollton Gage on a rising stage, and until the gage reads 9 feet on a falling stage, the movement of all tugs with tows and all ships, whether under their own power or in tow, but excluding tugs or towboats without tows or river craft of comparable size and maneuverability operating under their own power, in the vicinity of Algiers Point shall be governed by red and green lights designated and located as follows: Governor Nicholls Light located on the left descending bank on the wharf shed at the upstream end of Esplanade Avenue Wharf, New Orleans, approximately 94.3 miles above Head of Passes; and Gretna Light located on the right descending bank on top of the levee at the foot of Ocean Avenue, Gretna, approximately 96.6 miles above Head of Passes. Governor Nicholls Light has lights visible from both upstream and downstream, and Gretna Light has lights visible from upstream, all indicating by proper color the direction of traffic around Algiers Point. From downstream, Gretna Light always shows green. All lights are visible throughout the entire width of the river and flash once every second. A green light displayed ahead of a vessel (in the direction of travel) indicates that Algiers Point is clear and the vessel may proceed. A red light displayed ahead of a vessel (in the direction of travel) indicates that Algiers Point is not clear and the vessel shall not proceed. Absence of lights shall be considered a danger signal and no attempt shall be made to navigate through the restricted area.

NOTE: To provide advance information to downbound vessels whether the control light at Gretna (Gretna Light) is red or green, a traffic light is located at Westwego on the right descending bank, on the river batture at the end of Avenue B, approximately 101.4 miles above Head of Passes.

(2) *Ascending vessels.* Ascending vessels shall not proceed farther up the river than a line connecting the upper end of Atlantic Street Discharge Light (on right descending bank) with the lower end of Desire Street Wharf (on left descending bank) when a red light is displayed. Vessels waiting for a change of signal shall keep clear of descending vessels.

(3) *Descending vessels.* (i) Descending vessels shall not proceed farther down the river than a line connecting the lower end of Julia Street Wharf (on left descending bank) with the vertical flagpole at Eastern Associated Terminals (on right descending bank) when a red light is displayed. Vessels shall round to and be headed upstream before they reach that line, if the signal remains against the vessel. Vessels waiting for a change of signal shall keep clear of ascending vessels.

(ii) Vessels destined to a wharf above the lower end of Julia Street Wharf shall signal the Gretna towerman three long blasts and one short blast of a whistle or horn to indicate that the vessel is not bound below the Julia Street Wharf.

(iii) The master, pilot, or authorized representative of any vessel scheduled to depart from a wharf between Governor Nicholls Light and Louisiana Avenue, bound downstream around Algiers Point, shall communicate with the Governor Nicholls Light towerman by telephone to determine whether the channel at Algiers Point is clear before departure. When the point is clear, vessels shall then proceed promptly so that other traffic will not be unnecessarily delayed.

NOTE: Telephone numbers of both signal towers will be published in navigation bulletins in advance of each operating period.

(4) *Minor changes.* The District Commander is authorized to waive operation or suspension of the lights whenever prospective river stages make it appear that the operation or suspension will be required for only a brief period of time or when river stages will rise or fall below the critical stage which is established for operation or suspension by only a few tenths on the Carrollton Gage.

(5) *Underpowered vessels.* When the Carrollton Gage reads 12 feet or higher, any vessel which is considered by the master or pilot as being underpowered or a poor handler shall not navigate around Algiers Point without the assistance of a tug or tugs.

(6) *Towing.* When the Carrollton Gage reads 12 feet or higher, towing on a hawser in a downstream direction between Julia Street and Desire Street is prohibited except by special permission of the District Commander.

(d) Navigation of South and Southwest Passes.

(1) No vessel, except small craft and towboats and tugs without tows, shall enter either South Pass or Southwest Pass from the Gulf until after any descending vessel which has approached within two and one-half (2½) miles of the outer end of the jetties and visible to the ascending vessel shall have passed to sea.

(2) No vessel having a speed of less than ten mph shall enter South Pass from the Gulf when the stage of the Mississippi River exceeds 15 feet on the Carrollton Gage at New Orleans. This paragraph does not apply when Southwest Pass is closed to navigation.

(3) No vessel, except small craft and towboats and tugs without tows, ascending South Pass shall pass Franks Crossing Light until after a descending vessel shall have passed Depot Point Light.

(4) No vessel, except small craft and towboats and tugs without tows, shall enter the channel at the head of South Pass until after an ascending vessel which has reached Franks Crossing Light shall have passed through into the river.

(5) When navigating South Pass during periods of darkness no tow shall consist of more than one towed vessel other than small craft, and during daylight hours no tow shall consist of more than two towed vessels other than small craft. Tows may be in any formation. When towing on a hawser, the hawser shall be as short as practicable to provide full control at all times.

(6) When towing in Southwest Pass during periods of darkness no tow shall consist of more than two towed vessels other than small craft, and during daylight hours no tow shall consist of

more than three towed vessels other than small craft.

(e) Watch requirements for anchored and moored passenger vessels.

(1) *Passenger vessels.* Except as provided in paragraph (e)(2) of this section, each passenger vessel with one or more passengers on board, must—

(i) Keep a continuously manned pilothouse; and

(ii) Monitor river activities and marine VHF, emergency and working frequencies of the port, so as to be immediately available to take necessary action to protect the vessel, crew, and passengers if an emergency radio broadcast, danger signal, or visual or other indication of a problem is received or detected.

(2) Each ferryboat, and each small passenger vessel to which 46 CFR 175.110 applies, may monitor river activities using a portable radio from a vantage point other than the pilothouse.

(f) Each self-propelled vessel of 1,600 or more gross tons subject to 33 CFR part 164 shall also comply with the following:

(1) While under way in the RNA, each vessel must have an engineering watch capable of monitoring the propulsion system, communicating with the bridge, and implementing manual-control measures immediately when necessary. The watch must be physically present in the machinery spaces or in the machinery-control spaces and must consist of at least a licensed engineer.

(2) Before embarking a pilot when entering or getting under way in the RNA, the master of each vessel shall ensure that the vessel is in compliance with 33 CFR part 164.

(3) The master shall ensure that the chief engineer has certified that the following additional operating conditions will be satisfied so long as the vessel is under way within the RNA:

(i) The main propulsion plant is in all respects ready for operations including the main-propulsion air-start systems, fuel systems, lubricating systems, cooling systems, and automation systems;

(ii) Cooling, lubricating, and fuel-oil systems are at proper operating temperatures;

(iii) Main propulsion machinery is available to immediately respond to the full range of maneuvering commands any load-limiting programs or automatic acceleration-limiting programs that would limit the speed of response to engine orders beyond that needed to prevent immediate damage to the propulsion machinery are capable of being overridden immediately.

(iv) Main-propulsion standby systems are ready to be immediately placed in service.

(Sec. 104, Pub. L. 92–340, 86 Stat. 424 (33 U.S.C. 1224); sec. 2, Pub. L. 95–474, 92 Stat. 1471 (33 U.S.C. 1223); 49 CFR 1.46(n)(4))

[CGD 75–082, 42 FR 51759, Sept. 29, 1977, as amended by CGD 78–080, 44 FR 47933, Aug. 16, 1979; CGD 86–049, 51 FR 27840, Aug. 4, 1986. Redesignated by CGD 90–020, 59 FR 36324, July 15, 1994; CGD 95–033, 60 FR 28333, May 31, 1995; CCGD08–97–020, 62 FR 58653, Oct. 30, 1997; CCGD08–97–020, 64 FR 18813, Apr. 16, 1999]

§ 165.811 Atchafalaya River, Berwick Bay, LA-regulated navigation area.

(a) The following is a regulated navigation area: the waters of the Atchafalaya River in Berwick Bay bounded on the northside from 2,000 yards north of the U.S. 90 Highway Bridge and on the southside from 4,000 yards south of the Southern Pacific Railroad (SPRR) Bridge.

(b) Within the regulated navigation area described in paragraph (a) of this section, § 161.40 of this chapter establishes a VTS Special Area for waters within a 1000 yard radius of the SPRR Bridge.

(c) When the Morgan City River gauge reads 3.0 feet or above mean sea level, in addition to the requirements set forth in § 161.13 of this chapter, the requirements of paragraph (d) and (e) of this section apply to a towing vessel which will navigate:

(1) under the lift span of the SPRR Bridge; or

(2) through the navigational opening of the U.S. 90 Highway Bridge: or

(3) through the navigational opening of the Highway 182 Bridge.

(d) *Towing requirements.* (1) Towing on a hawser is not authorized, except that one self-propelled vessel may tow one other vessel without barges upbound;

(2) A towing vessel and barges must be arranged in tandem, except that one vessel may tow one other vessel alongside;

(3) Length of tow must not exceed 1,180 feet; and

(4) Tows with a box end in the lead must not exceed 400 feet in length.

NOTE: The variation in the draft and the beam of the barges in a multi-barge tow should be minimized in order to avoid unnecessary strain on coupling wires.

(e) *Horsepower Requirement.* (1) The following requirements apply to a towing vessel of 3,000 hp or less:

TABLE 165.811(E)—MINIMUM AVAILABLE HORSEPOWER REQUIREMENT

[The greater value listed.]

Direction of tow	Daytime (sunrise to sunset)	Nighttime (sunset to sunrise)
Upbound	400hp or (Length of tow—300ft) × 3.	600hp or (Length of tow—200ft) × 3.
Downbound	600hp or (Length of tow—200ft) × 3.	600hp or (Length of tow) × 3.

Note: A 5% variance from the available horsepower is authorized.

(2) All tows carrying cargoes of particular hazard as defined in § 160.203 of this chapter must have available horsepower of at least 600 hp or three times the length of tow, whichever is greater.

(f) *Notice of Requirements.* Notice that these rules are anticipated to be put into effect, or are in effect, will be given by:

(1) Marine information broadcasts;

(2) Notices to mariners;

(3) Vessel Traffic Center advisories or upon vessel information request; and

(4) Visual displays on top of the SPRR Bridge, consisting of:

(i) Two vertically arranged red balls by day; or

(ii) Two vertically arranged flashing white lights by night.

NOTE: Visual displays are not shown during precautionary periods (when the Morgan City River Gauge reads 2.5 feet above mean sea level). However, precautionary notices will be issued via marine notice to mariners, notice to mariners, VTC advisories or vessel information requests, when water level remains at or above 2.5 feet. Visual displays are Class I, private aids to navigation maintained by SPRR Bridge.

[CGD 90–020, 59 FR 36334, July 15, 1994, as amended by CGD 95–033, 60 FR 28333, May 31, 1995]

§ 165.815 Ohio River at Louisville, KY; regulated navigation area.

(a) The following is a regulated navigation area: The waters of the Ohio River from the Clark Memorial (Highway) Bridge at Mile 603.5, downstream to McAlpine Dam at Mile 604.4.

(b) The general regulations governing regulated navigation area contained in 33 CFR part 165, subpart B apply.

(c) No pleasure or fishing craft shall be operated within the regulated navigation area at any time without prior permission of the Captain of the Port, Louisville, Kentucky, except in case of emergency and except for passage through McAlpine Lock.

[CGD 2–89–04, 55 FR 23203, June 7, 1990. Redesignated by CGD 96–026, 61 FR 33669, June 28, 1996]

§ 165.817 Arkansas River, Mile 118.2 to 125.4, Little Rock Arkansas—regulated navigation area.

(a) Location. The following is a regulated navigation area (RNA): The waters of the Arkansas River between mile 118.2 and mile 125.4.

(b) Regulations. Transit of the RNA is limited during periods of high velocity flow, defined as the flow rate of 70,000 cubic feet per second or more at the Murray Lock and Dam at mile 125.4. The flow rate at this location is calculated by the U.S. Army Corps of Engineers on a regular and routine basis. This information will be distributed by announcements by Coast Guard Marine Information Broadcasts, publication in Coast Guard Local Notice to Mariners, and telephone or radio contact with the Lockmaster at Murray Lock and Dam.

(c) Transit of the RNA during periods of high velocity flow may only occur under the following conditions:

(1) Vessels may not meet or pass in the RNA.

(2) No vessel shall anchor, stop, remain or drift without power at any time in the RNA.

(3) All vessels shall continually monitor VHF–FM channel 13 on their radiotelephone while in or approaching the RNA.

(4) Prior to entering the RNA, downbound vessels shall make a broadcast in the blind on VHF–FM channel 13 announcing their estimated time of

departure from Murray Lock and Dam or from the mooring cells at mile 121.5 to ensure there are no upbound vessels within the RNA. If there is upbound traffic within the RNA, the downbound vessel shall not depart until the upbound vessel has passed through the RNA. After departing, vessels will proceed through the RNA, including all drawbridges located therein, without delay.

(5) When upbound vessels reach mile 116, they shall make a broadcast in the blind on VHF–FM channel 13 announcing their estimated arrival time at the Rock Island Railroad Bridge at mile 118.2.

(6) When a downbound vessel is already in the RNA, an upbound vessel shall adjust its speed so as to avoid a meeting situation in the RNA.

(d) Refer to 33 CFR 117.123 for drawbridge operation regulations.

[CGD2–90–04, 57 FR 22176, May 27, 1992. Redesignated by CGD 96–026, 61 FR 33669, June 28, 1996]

§ 165.819 Monongahela River, Mile 81.0 to 83.0—regulated navigation area.

(a) *Location.* The following is a regulated navigation area—The waters of the Monongahela River between mile 81.0 and mile 83.0.

(b) *Regulations.* Transit of the RNA by vessels required to have a radiotelephone under 33 CFR 26.03 may be made only under the following conditions:

(1) Traffic is restricted to one-way passage, with no meeting, passing, or overtaking authorized.

(2) Upbound vessels must give way to downbound vessels and, when approaching mile 81.0, in the area of Cats Run Light and the daymark located on the right descending bank, are to contact any downbound vessels in the area to coordinate transit of the area in accordance with this section.

(3) Downbound vessels, when approaching mile 83.0, in the vicinity of Warwick Mine on the left descending bank, are to contact any upbound vessels in the area to coordinate transit of the area in accordance with this section.

(c) Any deviations from this section must be authorized by the Captain of the Port, Pittsburgh, PA, prior to entering the RNA.

[CGD2–91–06, 56 FR 55820, Oct. 30, 1991, as amended by CGD02–93–001, 58 FR 59952, Nov. 12, 1993. Redesignated by CGD 96–026, 61 FR 33669, June 28, 1996]

§ 165.821 Ohio River at Cincinnati, OH; regulated navigation area.

(a) *Location.* The following is a regulated navigation area (RNA)—The waters of the Ohio River between mile 466.0 and mile 473.0.

(b) *Activation.* The restrictions in paragraphs (c) (1) through (4) are in effect from one-half hour before sunset to one-half hour after sunrise when the Cincinnati, Ohio, Ohio River Gauge is at or above the 45 foot level. The Captain of the Port, Louisville, Kentucky will publish a notice in the Local Notice to Mariners and will make announcements by Coast Guard Marine Information Broadcasts whenever the river level measured at the gauge activates or terminates the navigation restrictions in this section.

(c) *Regulations.*

(1) Transit through the RNA by all downbound vessels towing cargoes regulated by Title 46 Code of Federal Regulations Subchapters D and O with a tow length exceeding 600 feet excluding the tow boat is prohibited.

(2) No vessel shall loiter, anchor, stop, remain or drift without power at any time within the navigation channel of the RNA.

(3) All commercial vessels shall continually monitor VHF–FM channel 13 on their radiotelephone while in or approaching the RNA.

(4) Between Ohio River miles 464.0 and 466.0, downbound vessels shall make a broadcast in the blind, on VHF–FM channel 13 announcing their estimated time of entering the RNA.

[CGD02–95–003, 61 FR 2417, Jan. 26, 1996. Redesignated by CGD 97–023, 62 FR 33365, June 19, 1997, as amended by USCG–1998–3799, 63 FR 35533, June 30, 1998]

NINTH COAST GUARD DISTRICT

§ 165.901 Great Lakes—regulated navigation areas.

(a) *Lake Huron.* The following are regulated navigation areas:

(1) The waters of Lake Huron known as South Channel between Bois Blanc Island and Cheboygan, Michigan; bounded by a line north from Cheyboygan Crib Light (LL–1340) at 45°39′ 48′ ′N, 84°27′ 36′ ′W; to Bois Blanc Island at 45°43′ 42′ ′N, 84°27′ 36′ ′W; and a line north from the mainland at 45°43′ 00′ ′N, 84°35′ 30′ ′W; to the western tangent of Bois Blanc Island at 45°48′ 42′ ′N, 84°35′ 30′ ′W.

(2) The waters of Lake Huron between Mackinac Island and St. Ignace, Michigan, bounded by a line east from position 45°52′ 12′ ′N, 84°43′ 00′ ′W; to Mackinac Island at 45°52′ 12′ ′N, 84°39′ 00′ ′W; and a line east from the mainland at 45°53′ 12′ ′N, 84°43′ 30′ ′W; to the northern tangent of Mackinac Island at 45°53′ 12′ ′N, 84°38′ 48′ ′W.

(b) *Lake Michigan.* The following is a regulated navigation area—The waters of Lake Michigan known as Gray's Reef Passage bounded by a line from Gray's Reef Light (LL–2006) at 45°46′ 00′ ′N, 85°09′ 12′ ′W; to White Shoals Light (LL–2003) at 45°50′ 30′ ′N, 85°08′ 06′ ′W; to a point at 45°49′ 12′ ′N, 85°04′ 48′ ′W; then to a point at 45°45′ 42″ N, 85°08′ 42″ W; then to the point of beginning.

(c) *Regulations.* The COTP, Sault Ste. Marie, will close and open these regulated navigation areas as ice conditions dictate. Under normal seasonal conditions, only one closing each winter and one opening each spring are anticipated. Prior to the closing or opening of the regulated navigation areas, the COTP will give interested parties, including both shipping interests and island residents, not less than 72 hours notice of the action. No vessel may navigate in a regulated navigation area which has been closed by the COTP. Under emergency conditions, the COTP may authorize specific vessels to navigate in a closed regulated navigation area.

[CGD 79–034, 47 FR 29660, July 8, 1982, as amended by CGD 79–026, 48 FR 35408, Aug. 4, 1983]

§ 165.902 Niagara River at Niagara Falls, New York—safety zone.

(a) The following is a safety zone—The United States waters of the Niagara River from the crest of the American and Horseshoe Falls, Niagara Falls, New York to a line drawn across the Niagara River from the downstream side of the mouth of Gill Creek to the upstream end of the breakwater at the mouth of the Welland River.

§ 165.903 Safety Zones: Cuyahoga River and Old River, Cleveland, OH.

(a) *Location.* The waters of the Cuyahoga River and the Old River extending ten feet into the river at the following eleven locations, including the adjacent shorelines, are safety zones, coordinates for which are based on NAD 83.

(1) From the point where the shoreline intersects longitude 81°42′ 24.5″ W, which is the southern side of the Conrail No. 1 railroad bridge, southeasterly along the shore for six hundred (600) feet to the point where the shoreline intersects longitude 81°42′ 24.5″ W, which is the end of the lot adjacent to Fagan's Restaurant.

(2) One hundred (100) feet downriver to one hundred (100) feet upriver from 41 degrees 29′53.5″ N, 81 degrees 42′33.5″ W, which is the knuckle on the north side of the Old River entrance at Ontario Stone.

(3) Fifty (50) feet downriver to fifty (50) feet upriver from 41 degrees 29′48.4″ N, 81 degrees 42′44″ W, which is the knuckle adjacent to the Ontario Stone warehouse on the south side of the Old River.

(4) From 41 degrees 29′51.1″ N, 81 degrees 42′32.0″ W, which is the corner of Nicky's pier at Sycamore Slip on the Old River, to fifty (50) feet east of 41 degrees 29′55.1″ N, 81 degrees 42′27.6″ W, which is the north point of the pier at Shooter's Restaurant on the Cuyahoga River.

(5) Twenty-five (25) feet downriver to twenty-five (25) feet upriver of 41 degrees 29′48.9″ N, 81 degrees 42′10.7″ W, which is the knuckle toward the downriver corner of the Nautica Stage.

(6) Ten (10) feet downriver to ten (10) feet upriver of 41 degrees 29′45.5″ N, 81 degrees 42′9.7″ W, which is the knuckle toward the upriver corner of the Nautica Stage.

(7) The fender on the west bank of the river at 41 degrees 29′45.2″ N, 81 degrees 42.10″ W, which is the knuckle at Bascule Bridge (railroad).

(8) The two hundred seventy (270) foot section on the east bank of the

river between the Columbus Road bridge (41 degrees 29′18.8″ N, 81 degrees 42′02.3W) downriver to the chain link fence at the upriver end of the Commodores Club Marina.

(9) Fifty (50) feet downriver of twenty-five (25) feet upriver from 41 degrees 29′24.5″ N, 81 degrees 41′57.2″ W, which is the knuckle at the Upriver Marine fuel pump.

(10) Seventy-five (75) feet downriver to seventy-five (75) feet upriver from 41 degrees 29′33.7″ N, 81 degrees 41′57.5″ W. which is the knuckle adjacent to the warehouse at Alpha Precast Products (United Ready Mix).

(11) Fifteen (15) feet downriver to fifteen (15) feet upriver from 41 degrees 29′41″ N, 81 degrees 41′38.6″ W, which is the end of the chain link fence between Jim's Steak House and Shippers C & D.

(b) *Regulations*—(1) *General Rule.* Except as provided below, entry of any kind or for any purpose into the foregoing zones is strictly prohibited in accordance with the general regulations in § 165.23 of this part.

(2) *Exceptions.* Any vessel may transit, but not moor, stand or anchor in, the foregoing zones as necessary to comply with the Inland Navigation Rules or to otherwise facilitate safe navigation. Cargo vessels of 1600 gross tons (GT) or greater may moor in these zones when conducting cargo transfer operations.

(3) *Waivers.* Owners or operators of docks wishing a partial waiver of these regulations may apply to the Captain of the Port, Cleveland, Ohio. Partial waivers will only be considered to allow for the mooring of vessels in a safety zone when vessels of 1600 GT on greater are not navigating in the proximate area. Any requests for a waiver must include a plan to ensure immediate removal of any vessels moored in a safety zone upon the approach of a vessel(s) 1600 GTs or greater.

[COTP Cleveland REG 89–01, 54 FR 9778, Mar. 8, 1989, as amended by CGD 09–95–018, 61 FR 37685, July 19, 1996]

§ 165.904 Lake Michigan at Chicago Harbor & Burnham Park Harbor—Safety and Security Zone.

(a) *Location.* All waters, waterfront facilities, and shoreline areas within 1000 yards of the shoreline surrounding Merrill C. Meigs Airfield constitute a safety and security zone. This includes all waters including Burnham Park Harbor and the southern part of Chicago Harbor, Lake Michigan, bounded by the following coordinates:

(1) Northwest point: 41°52′ 33′ ′N, 87°36′ 58′ ′W

(2) Northeast point: 41°52′ 33′ ′N, 87°35′ 41′ ′W

(3) Southeast point: 41°50′ 42′ ′N, 87°35′ 41′ ′W

(4) Southwest point: 41°50′ 42′ ′N, 87°36′ 33′ ′W

(5) From the southwest point, north along the Lake Michigan shoreline, including Burnham Park Harbor, to the northwest point.

(b) *Effective times and dates.* This safety and security zone will be in effect at various times to be published in the Coast Guard Local Notice to Mariners or broadcasted via Marine Radio VHF–FM Channels 16 & 22. These times will include the actual effective time and date and the termination time and date.

(c) *Restrictions.* (1) In accordance with the general regulations in section 165.23 and 165.33 of this part, entry into this zone is prohibited, unless authorized by the U.S. Coast Guard Captain of the Port, Chicago, or the U.S. Secret Service. Other general requirements in §§ 165.23 and 165.33 also apply. Further, no person may enter or remain in the shoreline areas of the established safety and security zone, unless cleared by a Coast Guard or U.S. Secret Service official.

(2) Vessels in Burnham Park Harbor at the commencement of the safety and security zone must be moored and remain moored while the safety and security zone is established, unless authorized to get underway by a Coast Guard or U.S. Secret Service official.

(3) No person may engage in swimming, snorkeling, or diving within the established safety and security zone, except with the permission of the Captain of the Port or U.S. Secret Service.

[CGD09–94–005, 59 FR 45227, Sept. 1, 1994]

§ 165.905 USX Superfund Site Safety Zones: St. Louis River.

(a) The following areas of the St. Louis River, within the designated

boxes of latitude and longitude, are safety zones:

(1) *Safety Zone* #1 (*North Spirit Lake*):

North Boundary: 46°41′ 33″ W
South Boundary: 46°41′ 18″ W
East Boundary: 92°11′ 53″ W
West Boundary: 92°12′ 11″ W

(2) Safety Zone #2 (*South Spirit Lake*):

North Boundary: 46°40′ 45″ N
South Boundary: 46°40′ 33″ N
East Boundary: 92°11′ 40″ W
West Boundary: 92°12′ 05″ W

(b) Transit of vessels through the waters covered by these zones is prohibited. Swimming (including water skiing or other recreational use of the water which involves a substantial risk of immersion in the water) or taking of fish (including all forms of aquatic animals) from the waters covered by these safety zones is prohibited at all times.

[CGD09–95–026, 60 FR 52862, Oct. 11, 1995]

§ 165.906 Lakeside Yacht Club in Cleveland Harbor, Cleveland, OH—regulated navigation areas.

(a) *Restricted Areas.* The following are areas inside Cleveland Harbor which are subject to navigational restrictions based on the height of vessel masts as specified in paragraph (b) of this section. For the purpose of this section, the term ''mast'' will be used to include masts, antennae or any other portion of the vessel extending above the waterline. All of these areas are inside the ''Lakeside Yacht Club entrance channel,'' defined as the water area between the Lakeside Yacht Club jetties and the Burke Lakefront Airport landfill, or inside the ''Lakeside Yacht Club docks,'' defined as the docking area inside the Lakeside Yacht Club jetties and immediately adjacent to Lakeside Yacht Club.

(1) *Restricted area no. 1.* Restricted area no. 1 is the water area on the southwest end of the Lakeside Yacht Club entrance channel which is southwest of a line running 328° T and northwest of a line running 232° T from a point at 41°31′28.00″ N, 81°40′02.60″ W, which point is marked by a fixed flashing yellow light.

(2) *Restricted area no. 2.* Restricted area no. 2 is the water area of the Lakeside Yacht Club entrance channel which is outside restricted area no. 1 and the entrance to the Yacht Club docking area, and southwest of a line running 328° T from the intersection of 81°39′58.47″ W and reference line running between point A at 41°31′33.45″ N, 81°39′47.45″ W and point B at 41°31′19.67″ N, 81°40′19.17″ W.

(3) *Restricted area no. 3.* Restricted area no. 3 is the water area of the Lakeside Yacht Club entrance channel which is outside restricted area no. 1, and southwest of a line running 328° T from point A at 41°31′33.45″ N., 81°39′47.45″ W.

(4) *Restricted area no. 4.* Restricted area no. 4 is the area inside the Lakeside Yacht Club docks which is southwest of a line running 328° T from the intersection of 81°39′58.47″ W and a reference line running between point A at 41°31′33.45″ N, 81°39′47.45″ W and point B at 41°31′19.67″ N, 81°40′19.17″ W, and northwest of the same reference line.

(5) *Restricted area no. 5.* Restricted area no. 5 is the area inside the Lakeside Yacht Club docks which is outside restricted area 4 and northwest of a line 183 feet southeast and parallel to a reference line running between point A at 41°31′33.45″ N, 81°39′47.45″ W and point B at 41°31′19.67″ N, 81°40′19.17″ W.

(6) *Restricted area no. 6.* Restricted area no. 6 is the area inside the Lakeside Yacht Club docks which is outside restricted areas 4 and 5.

(b) *Restrictions applicable to vessels of certain heights.* Vessels with masts of certain heights are subject to the following restrictions with reference to the restricted areas detailed in paragraph (a) of this section. The height of a vessel is the height above the water line of masts, antennas, navigational equipment, or any other structure.

(1) *Less than 41 feet.* Vessels less than 41 feet in height are not subject to any restrictions under this section.

(2) *41 to 45 feet.* Vessels at least 41 feet in height yet less than 45 feet in height may not enter restricted area 1.

(3) *45 to 53 feet.* Vessels at least 45 feet in height yet less than 53 feet in height may not enter restricted area 1 and must comply with the clearance procedures prescribed in paragraph (c) when navigating through restricted area 2.

(4) *53 to 63 feet.* Vessels at least 53 feet in height yet less than 63 feet in height may not enter restricted area 1, must

comply with the clearance procedures prescribed in paragraph (c) of this section when navigating through restricted area 2, and may not dock in or enter restricted area 4 at any time.

(5) *63 to 95 feet.* Vessels at least 63 feet in height yet less than 95 feet in height may not enter restricted area 1, must comply with the clearance procedures prescribed in paragraph (c) of this section when navigating through restricted areas 2 or 3, and may not dock in or enter restricted areas 4 or 5 at any time.

(6) *95 feet or more.* Vessel 95 feet or more in height may not enter any restricted area, 1 through 6, at any time.

(c) *Clearance procedures.* Except during the times specified in paragraph (d), operators of vessels subject to these procedures must do the following:

(1) Obtain clearance from the Burke Lakefront Air Traffic Control Tower before navigating through the restricted area(s);

(2) Navigate promptly through the area(s) at a safe and practical speed. Navigation at a safe and practical speed includes brief stops at the fueling dock inside restricted area 3 by vessels with masts between 63 and 95 feet in height; and

(3) Promptly inform the Burke Lakefront Air Traffic Control Tower after clearing the restricted area(s), or of any difficulty preventing prompt clearance. The Burke Lakefront Air Traffic Control Tower may be contacted on marine radio channel 14, or by telephone at (216) 781–6411 except as noted during the suspended hours listed in paragraph (d) of this section. The radio and telephone will be manned when the instrument guided approach system is being utilized.

(4) Clearance may also be obtained for longer periods or for groups of vessels when arranged in advance with Burke Lakefront Airport by any appropriate means of communication, including a prior written agreement.

(d) *Enforcement of clearance requirements.* The clearance procedures specified in paragraph (c) of this section will not be enforced during the following times:

(1) 11:00 p.m. n Fridays to 7:00 a.m. on Saturdays.

(2) 11:00 p.m. on Saturdays to 8:00 a.m. on Sundays.

(3) 12:00 midnight Sunday nights to 7:00 a.m. on Mondays.

(e) *Enforcement.* This section will not be enforced during any period in which the Federal Aviation Administration withdraws approval for operation of an instrument-only approach to runway 24 on the northeast end of Burke Lakefront Airport.

[CGD09–97–002, 64 FR 8006, Feb. 18, 1999]

ELEVENTH COAST GUARD DISTRICT

§ 165.1101 Safety Zone: San Pedro Bay, CA.

(a) *Location.* The following areas are established as safety zones during the specified conditions:

(1) The waters within a 500 yard radius around a liquefied hazardous gas tank vessel (LHG T/V), while the vessel is anchored at a designated anchorage area either inside the Federal breakwaters bounding San Pedro Bay, or anchored outside the breakwaters at designated anchorage areas within three (3) miles of the breakwaters;

(2) The waters and land area within 50 yards of a LHG T/V, while the vessel is moored at any berth within the Los Angeles or Long Beach port area, inside the Federal breakwaters bounding San Pedro Bay;

(3) The waters 1000 yards ahead of and within 500 yards of all other sides of a LHG T/V, while the vessel is underway on the waters inside the Federal breakwaters encompassing San Pedro Bay, or within the waters three (3) miles outside of the Federal breakwaters in an area more particularly described as follows: Beginning at a point which is Point Fermin Light (33°42′ 18″ N, 118°17′ 36″ W); thence along the shoreline to the San Pedro breakwater; thence along the San Pedro breakwater and the Middle breakwater (following the COLREGS Demarcation Lines) to Long Beach Channel Entrance Light ''2'' (33°43′ 23″ N, 118°10′ 50″ W)' thence south southeast to 33°40′ 31″ N, 118°08′ 42″ W; thence west to 33°40′ 31″ N, 118°12′ 03″ W; thence west southwest to 33°39′ 17″ N, 118°16′ 00″ W; thence northwest to 33°40′ 06″ N, 118°17′ 38″ W; thence north to the point of beginning. [Datum: NAD 1983]

(b) *Regulations.* In accordance with the general regulations in §165.23 of this part, entry into, transit through, or anchoring within these zones is prohibited subject to the following exceptions:

(1) Entry may be authorized by the Captain of the Port; or

(2) Vessels already anchored or moored when the safety zone is in effect are not required to get underway to avoid entering into the safety zone boundaries as listed in paragraph (a) of this section.

(c) *Notice.* The Captain of the Port will notify the maritime community of periods during which this safety zone will be in effect via Broadcast Notice to Mariners.

[COTP Los Angeles–Long Beach 96–003, 61 FR 60029, Nov. 26, 1996]

§165.1102 Security Zone: San Diego Bay, California.

(a) *Location.* The following area is a security zone: The water area within Naval Station, San Diego, California, described as follows:

Commencing at a point at the mouth of Chollas Creek, at latitude 32°41′12.5″ N, longitude 117°07′0.57.0″ W, (Point A), for a place of beginning; thence southwesterly to a point on the U.S. Pierhead Line 100 yards (92 meters) northwest of the head of Pier 1, at latitude 32°41′05.8″ N, longitude 117°08′05.6″ W, (Point B); thence southeasterly along the U.S. Pierhead Line to the south side of Pier 13 (Point C); thence northeasterly along the south side of Pier 13 to the shoreline of the Naval Station (Point D); thence generally northwesterly along the shoreline of the Naval Station to the place of beginning (Point A).

(b) *Regulations.* In accordance with the general regulations in §165.33 of this part, entry into the area of this zone is prohibited unless authorized by the Captain of the Port, the Commander, Naval Base San Diego, or the Commanding Officer, Naval Station, San Diego. Section 165.33 also contains other general requirements.

[COTP San Diego Reg. 85–21, 51 FR 8198, Mar. 10, 1986]

§165.1103 Security Zone: San Diego Bay, California.

(a) *Location.* The following area is a security zone: The water area adjacent to the Naval Ocean Systems Center, San Diego, California, and the Naval Supply Center, San Diego, California, described as follows:

Commencing at a point on the shoreline of Point Loma, at latitude 32°41′57.8″ N, longitude 117°14′17.5″ W (Point A), for a place of beginning; thence easterly to latitude 32°41′56.0″ N, longitude 117°14′09.9″ W (Point B); thence northeasterly to latitude 32°42′03.8″ N, longitude 117°14′04.7″ W (Point C); thence northeasterly to latitude 32°42′10.2″ N, longitude 117°14′00.6″ W (Point D); thence northwesterly to latitude 32°42′14.6″ N, longitude 117°14′02.1″ W (Point E); thence northwesterly to latitude 32°42′22.7″ N, longitude 117°14′05.8″ W (Point F); thence northwesterly to latitude 32°42′28.3″ N, longitude 117°14′08.4″ W (Point G); thence westerly to latitude 32°42′28.3″ N, longitude 117°14′09.6″ W (Point H); thence generally southerly along the shoreline of Point Loma to the place of beginning (Point A).

(b) *Regulations.* In accordance with the general regulations in §165.33 of this part, entry into the area of this zone is prohibited unless authorized by the Captain of the Port, the Commander, Naval Base, San Diego, the Commander, Naval Ocean Systems Center, San Diego, or the Commanding Officer, Naval Supply Center, San Diego. Section 165.33 also contains other general requirements.

[COTP San Diego Reg. 85–20, 51 FR 8197, Mar. 10, 1986]

§165.1104 Security Zone: San Diego Bay, California.

(a) *Location.* The following area is a security zone: The water area adjacent to Naval Submarine Base, San Diego, California, described as follows:

Commencing at a point on the shoreline of Ballast Point, at latitude 32°41′11.2″ N., longitude 117°13′57.0″ W. (Point A), for a place of beginning; thence northerly (approximately 352 ° T) to latitude 32°41′31.8″ N., longitude 117°14′00.6″ W (Point B); thence westerly (approximately 243 ° T) to latitude 32°41′24.5″ N., longitude 117°14′18.7″ W. (Point C); thence generally southeasterly along the shoreline of the Naval Submarine Base to the place of beginning (Point A).

(b) *Regulations.* In accordance with the general regulations in §165.33 of this part, entry into the area of this zone is prohibited unless authorized by

the Captain of the Port, the Commander, Naval Base San Diego, or the Commander, Submarine Force, U.S. Pacific Fleet Representative, West Coast. Section 165.33 also contains other general requirements.

[COTP San Diego Reg. 85–19, 51 FR 8197, Mar. 10, 1986]

§ 165.1105 Security Zone: San Diego Bay, California.

(a) *Location.* The following area is a security zone: The water area adjacent to Naval Air Station North Island, Coronado, California, and within 100 yards (91.5 meters) of the Cruiser (J–K) Pier and within 300 yards (275 meters) of the Carrier (L–P) Pier, described as follows:

From a point on the shoreline of Naval Air Station North Island, on North Island, Coronado, California, at latitude 32°42′47.5″ N., longitude 117°11′25.0″ W. (Point A), for a place of beginning; thence northeasterly to latitude 32°42′52.0″ N., longitude 117°11′21.5″ W. (Point B); thence southeasterly to latitude 32°42′44.5″ N., longitude 117°11′11.0″ W. (Point C); thence southerly to latitude 32°42′31.0″ N., longitude 117°11′16.4″ W. (Point D); thence southeasterly to latitude 32°42′21.4″ N., longitude 117°10′44.5″ W. (Point E); thence southerly to latitude 32°42′12.8″ N., longitude 117°10′47.8″ W. (Point F); thence generally northwesterly along the shoreline of Naval Air Station North Island to the place of beginning (Point A).

(b) *Regulations.* In accordance with the general regulations in § 165.33 of this part, entry into the area of this zone is prohibited unless authorized by the Captain of the Port, the Commander, Naval Air Force, U.S. Pacific Fleet, the Commander, Naval Base San Diego, or the Commanding Officer, Naval Air Station North Island. Section 165.33 also contains other general requirements.

[COTP San Diego Reg. 85–17, 51 FR 8196, Mar. 10, 1986]

§ 165.1106 Security Zone: San Diego Bay, California.

(a) *Location.* (1) The following area is a security zone: The water area adjacent to Naval Air Station North Island, Coronado, California, and within 100 yards (91 meters) of Bravo Pier, and vessels moored thereto, bounded by the following points (when no vessel is moored at the pier):

(i) Latitude 32°41′ 53.0″ N, Longitude 117°13′ 33.6″ W;

(ii) Latitude 32°41′ 53.0″ N, Longitude 117°13′ 40.6″ W;

(iii) Latitude 32°41′ 34.0″ N, Longitude 117°13′ 40.6″ W;

(iv) Latitude 32°41′ 34.0″ N, Longitude 117°13′ 34.1″ W.

(2) Because the area of this security zone is measured from the pier and from vessels moored thereto, the actual area of this security zone will be larger when a vessel is moored at Bravo Pier.

(b) *Regulations.* In accordance with the general regulations in § 165.33 of this part, entry into the area of this zone is prohibited unless authorized by the Captain of the Port or the Commanding Officer, Naval Air Station North Island. Section 165.33 also contains other general requirements.

[COTP San Diego Reg. 85–11, 51 FR 3776, Jan. 30, 1986, as amended at 52 FR 8893, Mar. 20, 1987]

§ 165.1107 San Diego Bay, California—safety zone.

(a) The waters of San Diego Bay enclosed by the following boundaries are a safety zone:

From a point located on the boundary of Coast Guard Air Station San Diego, California at latitude 32°43′ 37.2″ N, longitude 117°10′ 45.0″ W (point A), for a point of beginning; thence southeasterly to latitude 32°43′ 36.2″ N, longitude 117°10′ 41.5″ W (point B); thence southwesterly to latitude 32°43′ 20.2″ N, longitude 117°10′ 49.5″ W (point C); thence northwesterly to latitude 32°43′ 25.7″ N, longitude 117°11′ 04.6″ W (point D); thence northeasterly to latitude 32°43′ 35.7″ N, longitude 117°10′ 59.5″ W (point E); thence generally easterly along the air station boundary to the point of beginning (point A).

(b)(1) In accordance with the general regulations in § 165.23 of this part, entry into the area of this zone is prohibited unless authorized by the Captain of the Port, except as provided for below.

(2) Vessels may transit the area of this safety zone without permission, but may not anchor, stop, remain within the zone, or approach within 100

yards (92 meters) of the land area of Coast Guard Air Station San Diego or structures attached thereto.

[CGD 85–034, 50 FR 14703, Apr. 15, 1985 and COTP San Diego Reg. 85–06, 50 FR 38003, Sept. 19, 1985]

§165.1108 San Diego Bay, California.

(a) *Location.* The area encompassed by the following geographic coordinates is a regulated navigation area:

32°41′24.6″N	117°14′21.9″W
32°41′34.2″N	117°13′58.5″W
32°41′34.2″N	117°13′37.2″W

Thence south along the shoreline to

32°41′11.2″N	117°13′31.3″W
32°41′11.2″N	117°13′58.5″W

Thence north along the shoreline to the point of origin.

Datum: NAD 1983.

(b) *Regulations.* (1) During submarine docking/undocking operations at the U.S. Naval Submarine Base on Ballast Point, San Diego Bay, California, mariners transiting within the regulated navigation area shall proceed at a speed that generates no wake from their vessel.

(2) The Coast Guard will issue a Broadcast Notice to Mariners, and if time permits a Local Notice to Mariners, to inform the maritime community of the dates and times of the submarine docking/undocking operations covered by paragraph (b)(1).

(3) The master and/or operator of a vessel within the regulated navigation area shall comply with any other orders or directions issued by the Coast Guard as required for the safety of the submarine docking/undocking operations covered by paragraph (b)(1).

[CGD11–90–07, 56 FR 14645, Apr. 11, 1991; 56 FR 40360, Aug. 14, 1991, as amended by USCG–1998–3799, 63 FR 35533, June 30, 1998]

§165.1109 San Pedro Bay, California—Regulated navigation area.

(a) *Location.* The following is a regulated navigation area: The water area of San Pedro Bay encompassed by the following geographic coordinates:

From Point Fermin Light (33°42′ 18″ N, 118°17′ 36″ W) thence along the shoreline to the San Pedro Breakwater, thence along the San Pedro Breakwater and the Middle Breakwater (following the COLREGS Demarcation Lines) to Long Beach Channel Entrance Light ''2'' (33°42′ 42″ N, 118°14′ 42″ W), thence south southeast to 33°40′ 31″ N, 118°08′ 42″ W; thence west to 33°40′ 31″ N, 118°12′ 03″ W; thence west southwest to 33°39′ 17″ N, 118°16′ 00″ W; thence northeast to 33°40′ 06″ N, 118°17′ 38″ W; thence north to the point of origin.

[Datum: NAD 1983]

(b) *Pilot areas.* There are two pilot areas within the regulated navigation area described in paragraph (a). They are defined as follows:

(1) The Los Angeles Pilot Area is enclosed by a line beginning at Los Angeles Light (33°42′ 30″ N, 118°15′ 06″ W); thence easterly to Los Angeles Main Channel Entrance Light 2 (33°42′ 42″ N, 118°14′ 42″ W); thence southeasterly to 33°41′ 36.2″ (N, 118°13′ 46.2″ W; thence southwest to 33°41′ 13.9″ N, 118°14′ 55.4″ W; thence north to the point of origin.

[Datum: NAD 1983]

(2) The Long Beach Pilot Area is enclosed by a line beginning at Long Beach Light (33°43′ 24″ N, 118°11′ 12″ W); thence easterly to Long Beach Channel Entrance Light 2 (33°43′ 24″ N, 118°10′ 48″ W); thence southerly to 33°42′ 09.1″ N, 118°10′ 26.2″ W; thence west to 33°42′ 09.1″ N, 118°11′ 35.5″ W; thence northeasterly to the point of origin.

[Datum: NAD 1983]

(c) *Definitions.* For the purposes of this section:

(1) *Floating plant*—means any vessel, other than a vessel underway and making way, engaged in any construction, manufacturing, or exploration operation.

(2) *Vessel*—means every description of watercraft, used or capable of being used as a means of transportation on water.

(d) The following regulations apply to all vessels while operating within the regulated navigation area:

(1) *Los Angeles Pilot Area:*

(i) No vessel may enter the Los Angeles Pilot Area unless it is entering or departing the Los Angeles Main Channel via the Los Angeles Harbor Entrance (Angel's Gate).

(ii) Vessels entering the Los Angeles Pilot Area shall pass directly through without stopping or loitering unless stopping is necessary to embark or disembark a pilot.

(iii) Vessels shall leave Los Angeles Approach Lighted Bell Buoy ''LA'' to port when entering and departing Los Angeles Main Channel;

(2) *Long Beach Pilot Area:*

(i) No vessel may enter the Long Beach Pilot Area unless it is entering or departing Long Beach Harbor Entrance (Queen's Gate).

(ii) Every vessel entering the Long Beach Pilot Area shall pass directly thorugh without stopping or loitering unless stopping is necessary to embark or disembark a pilot.

(iii) Every vessel shall leave Long Beach Approach Lighted Whistle Buoy ''LB'' to port when entering and departing Long Beach Channel and departing vessels shall pass across the southern boundary of the Long Beach Pilot Area.

(e) The following regulations contained in paragraphs (e)(1) through (e)(4) apply to vessels 30 meters (approximately 98 feet) or over in length, towing vessels of 8 meters (approximately 26 feet) or over in length engaged in towing, vessels of 100 gross tons and upward carrying one or more passengers for hire while navigating, and each dredge and floating plant engaged in operations in the regulated navigation area:

(1) Such vessel's speed shall not exceed 12 knots;

(2) All verbal contact between such vessels shall be communicated in the English language. No such vessel may enter or transit within the regulated navigation area unless there is at least one person on the bridge immediately available to communicate with other vessels in the English language;

(3) When such vessels in the regulated navigation area encounter meeting, crossing, or overtaking situations as defined by the International Regulations for Prevention of Collisions at Sea, 1972 (72 COLREGS) the master, pilot or person in charge of each such vessel shall make verbal passing arrangements with the other over radiotelephone in addition to sound signal requirements of the 72 COLREGS;

(4) No such vessel may enter the waters between Commercial Anchorage G and the Middle Breakwater as defined by an area enclosed by a line beginning at Los Angeles Main Channel Entrance Light 2 (33°42′ 42″ N, 118°14′ 42″ W); thence eastward along the middle breakwater to Long Beach Light (33°43′ 24″ N, 118°11′ 12″ W); thence south to 33°43′ 05.3″ N, 118°11′ 15.3″ W; thence westerly to 33°43′ 05.3″ N, 118°12′ 15.7″ W; thence southwesterly parallel to the breakwater to 33°42′ 29.9″ N, 118°14′ 16.0″ W; thence to the point of origin, unless such vessel is:

(i) In an emergency;

(ii) Proceeding to anchor in or departing Commercial Anchorage G;

(iii) Standing by with confirmed pilot boarding arrangements; or,

(iv) Engaged in towing vessels to or from Commercial Anchorage G, or to or from the waters between Commercial Anchorage G and the Middle Breakwater.

[CCGD11–93–007, 59 FR 5953, Feb. 9, 1994]

§ 165.1110 Safety Zone: Los Angeles Harbor; San Pedro Bay, CA.

(a) *Location.* The following areas are established as safety zones:

(1) *Pier 400:* Those waters of Los Angeles Harbor and San Pedro Bay in the vicinity of Pier 400 as defined by the lines connecting the following coordinates.

Latitude	*Longitude*
33°44′29.06″N	118°14′17.25″W
33°43′48.06″N	118°13′59.25″W
33°43′03.50″N	118°14′11.72″W
33°42′45.17″N	118°15′04.78″W
33°43′00.00″N	118°15′29.90″W
33°43′21.94″N	118°15′41.51″W
33°43′45.04″N	118°15′30.81″W
33°43′58.55″N	118°14′44.38″W
33°44′03.70″N	118°14′26.65″W

and thence to the point of origin. All coordinates use Datum: NAD 83.

(2) *Shallow Water Habitat Extension:* Those waters of Los Angeles Harbor and San Pedro Bay as defined by the lines connecting the following coordinates.

Latitude	*Longitude*
33°42′32.10″N	118°15′00.00″W
33°42′49.84″N	118°15′41.51″W
33°42′47.06″N	118°15′58.26″W
33°42′24.99″N	118°15′23.59″W

and thence to the point of origin. All coordinates use Datum: NAD 83.

(3) *Moving Safety Zone: Dredge FLORIDA.* All waters within 50 yards on all sides of the Dredge FLORIDA, when it is within three nautical miles of the

base line from which the United States territorial sea is measured and engaged in dredging operations associated with the Pier 400 project.

(b) *Dates.* This section is effective from 6 a.m. PDT on May 28, 1998 through 11:59 p.m. PST on December 31, 1999.

(c) *Regulations.* In accordance with the general regulations in §165.23 of this part, entry into, transit through, or anchoring within any of these safety zones is prohibited unless authorized by the Captain of the Port Los Angeles-Long Beach, CA.

[COTP Los Angeles-Long Beach, 97–007, 63 FR 23219, Apr. 28, 1998, as amended by USCG–1998–3799, 63 FR 35533, June 30, 1998]

EFFECTIVE DATE NOTE: By COTP Los Angeles-Long Beach, 97–007, 63 FR 23219, Apr. 28, 1998, §165.1110 was revised, effective 6 a.m. PDT on May 28, 1998 until 11:59 p.m. PST on Dec. 31, 1999.

§165.1111 Security Zone: Wilson Cove, San Clemente Island, California.

(a) *Location.* The following area is a security zone: The water area adjacent to San Clemente Island, California within 1.5 nautical miles (1.73 statute miles, 2.8 kilometers) of the shoreline of San Clemente Island from Wilson Cove North End Light (LLNR 2565) to Spruce Pier, approximately 4.1 nautical miles (4.7 statute miles, 7.65 kilometers) southeast of Wilson Cove North End Light, described as follows:

Starting at a point on the shoreline of San Clemente Island, California, in position 33°01′25.0″ N, 118°33′43.0″ W, for a place of beginning (point A), thence northeasterly to 33°02′11.0″ N, 118°32′13.5″ W (point B), thence southeasterly to 32 °58′40.5″ N, 118°29′15.5″ W (point C), thence southwesterly to 32°57′54.0″ N, 118°31′17.2″ W (point D), thence northwesterly along the shoreline of San Clemente Island to the place of beginning.

(b) *Regulations.* In accordance with the general regulations in §165.33 of this part, entry into the area of this zone is prohibited unless authorized by the Captain of the Port, San Diego, California. Section 165.33 also contains other general requirements.

[COTP San Diego Reg. 87–04, 52 FR 18230, May 14, 1987]

§165.1114 San Francisco Bay Region, California—regulated navigation area.

(a) *Applicability.* This section applies to all ressels unless otherwise specified.

(b) *Deviations.* The Captain of the Port, San Francisco Bay, or the Commanding Officer, Vessel Traffic Service San Francisco, as a representative of the Captain of the Port, may authorize a deviation from the requirements of this regulation when it is deemed necessary in the interests of safety.

(c) *Regulated Navigation Areas—(1) San Francisco Bay RNA.* (i) The following is a regulated navigation area—The waters bounded by a line connecting the following coordinates, beginning at:

37°47′ 18′ ′N, 122°30′ 22′ ′W; thence to
37°48′ 55′ ′N, 122°31′ 41′ ′W; thence along the shoreline to
37°50′ 38′ ′N, 122°28′ 37′ ′W; thence to
37°50′ 59′ ′N, 122°28′ 00′ ′W; thence to
37°51′ 45′ ′N, 122°27′ 28′ ′W; thence to
37°52′ 58′ ′N, 122°26′ 06′ ′W; thence to
37°51′ 53′ ′N, 122°24′ 58′ ′W; thence to
37°51′ 53′ ′N, 122°24′ 00′ ′W; thence to
37°51′ 40′ ′N, 122°23′ 48′ ′W; thence to
37°49′ 22′ ′N, 122°23′ 48′ ′W; thence to
37°48′ 20′ ′N, 122°22′ 12′ ′W; thence to
37°47′ 02′ ′N, 122°21′ 33′ ′W; thence to
37°47′ 02′ ′N, 122°23′ 04′ ′W; thence along the shoreline to the point of beginning.

Datum: NAD 83

(ii) The San Francisco Bay RNA consists of the following defined sub-areas:

(A) *Golden Gate Traffic Lanes—(1) Westbound traffic lane:* Bounded by the Golden Gate precautionary area and the COLREGS Demarcation Line (33 CFR 80.1142), between the separation zone and a line connecting the following coordinates:

37°48′ 30′ ′N, 122°31′ 22′ ′W; thence to
37°49′ 03′ ′N, 122°29′ 52′ ′W.

Datum: NAD 83

(*2*) *Eastbound traffic lane.* Bounded by the COLREGS Demarcation Line (33 CFR 80.1142) and the Golden Gate precautionary area, between the separation zone and a line connecting the following coordinates:

37°47′ 50″ N, 122°30′ 48″ W; thence to

37°48′ 30″ N, 122°29′ 29″ W.

Datum: NAD 83

(*3*) *Golden Gate Separation Zone:* The area 75 yards each side of a line connecting the following coordinates:

37°48′ 08″ N, 122°31′ 05″ W; thence to
37°48′ 46″ N, 122°29′ 40″ W.

Datum: NAD 83

(B) *Golden Gate Precautionary Area:* An area bounded by a line connecting the following coordinates beginning at:

37°48′ 30″ N, 122°29′ 29″ W; thence to
37°48′ 52″ N, 122°28′ 41″ W; thence to
37°48′ 52″ N, 122°27′ 49″ W; thence to
37°49′ 36″ N, 122°27′ 46″ W; thence to
37°49′ 55″ N, 122°28′ 09″ W; thence to
37°49′ 28″ N, 122°28′ 45″ W; thence to
37°49′ 03″ N, 122°29′ 52″ W; thence returning to the point of beginning.

Datum: NAD 83

(C) *Central Bay Traffic Lanes*—(*1*) Westbound traffic lane: Bounded by the Central Bay precautionary area and the Golden Gate precautionary area, between the Central Bay and the Deep Water Traffic Lane separation zones.

(*2*) *Eastbound traffic lane:* Bounded by the Golden Gate precautionary area and the Central Bay precautionary area, between the Central Bay Separation Zone and a line connecting the following coordinates, beginning at:

37°48′ 41″ N, 122°25′ 17″ W; thence to
37°48′ 50″ N, 122°26′ 14″ W; thence to
37°48′ 52″ N, 122°27′ 49″ W.

Datum: NAD 83

(*3*) *Deep Water (two-way) Traffic Lane:* Bounded by the Central Bay precautionary area and the Golden Gate precautionary area, between the Deep Water Traffic Lane and a line connecting the following coordinates, beginning at:

37°49′ 55″ N, 122°28′ 09″ W; thence to
37°50′ 36″ N, 122°27′ 12″ W; thence to
37°50′ 47″ N, 122°26′ 26″ W.

Datum: NAD 83

(D) *Central Bay Separation Zone:* The area 75 yards each side of a line connecting the following coordinates, beginning at:

37°49′ 17″ N, 122°27′ 47″ W; thence to
37°49′ 35″ N, 122°25′ 25″ W.

Datum: NAD 83

(E) *Deep Water Traffic Lane Separation Zone:* The area 75 yards each side of a line connecting the following coordinates, beginning at:

37°49′ 36″ N, 122°27′ 46″ W; thence to
37°50′ 22″ N, 122°26′ 49″ W; thence to
37°50′ 25″ N, 122°26′ 22″ W.

Datum: NAD 83

(F) *Central Bay Precautionary Area:* An area bounded by a line connecting the following coordinates, beginning at:

37°48′ 41″ N, 122°25′ 17″ W; thence to
37°49′ 32″ N, 122°25′ 13″ W; thence to
37°50′ 25″ N, 122°26′ 22″ W; thence to
37°50′ 47″ N, 122°26′ 26″ W; thence to
37°51′ 04″ N, 122°24′ 58″ W; thence to
37°51′ 53″ N, 122°24′ 58″ W; thence to
37°51′ 53″ N, 122°24′ 00″ W; thence to
37°51′ 40″ N, 122°23′ 48″ W; thence to
37°49′ 22″ N, 122°23′ 48″ W; thence to
37°48′ 20″ N, 122°22′ 12″ W; thence to
37°47′ 02″ N, 122°21′ 33″ W; thence to
37°47′ 02″ N, 122°23′ 04′ ′W; thence to
37°47′ 02″ N, 122°23′ 04″ W; thence returning along the shoreline to the point of beginning.

Datum: NAD 83

(2) *North Ship Channel RNA.* The following is a regulated navigation area—The waters bounded by a line connecting the following coordinates, beginning at:

37°51′ 53″ N, 122°24′ 58″ W; thence to
37°54′ 15″ N, 122°27′ 27″ W; thence to
37°56′ 06″ N, 122°26′ 49″ W; thence to
37°56′ 06″ N, 122°26′ 34″ W; thence to
37°54′ 48″ N, 122°26′ 42″ W; thence to
37°54′ 02″ N, 122°26′ 10″ W; thence to
37°51′ 53″ N, 122°24′ 00″ W; thence to returning to the point of beginning.

Datum: NAD 83

(3) *San Pablo Strait Channel RNA.* The following is a regulated navigation area—The waters bounded by a line connecting the following coordinates, beginning at:

37°56′ 06″ N, 122°26′ 49″ W; thence to
37°57′ 26″ N, 122°27′ 21″ W; thence to
38°00′ 48″ N, 122°24′ 45″ W; thence to
38°01′ 54″ N, 122°22′ 24″ W; thence to

38°01′ 44″ N, 122°22′ 18″ W; thence to
37°57′ 37″ N, 122°26′ 23″ W; thence to
37°56′ 06″ N, 122°26′ 34″ W; thence returning to the point of beginning.

Datum: NAD 83

(4) *Pinole Shoal Channel RNA.* The following is a regulated navigation area—The waters bounded by a line connecting the following coordinates, beginning at:

38°01′ 54″ N, 122°22′ 25″ W; thence to
38°03′ 13″ N, 122°19′ 50″ W; thence to
38°03′ 23″ N, 122°18′ 31″ W; thence to
38°03′ 13″ N, 122°18′ 29″ W; thence to
38°03′ 05″ N, 122°19′ 28″ W; thence to
38°01′ 44″ N, 122°22′ 18″ W; thence returning to the point of beginning.

Datum: NAD 83

(5) *Southern Pacific Railroad Bridge RNA.* The following is a regulated navigation area—The water area contained within a circle with a radius of 200 yards, centered on 38°02′ 18″ N, 122°07′ 17″ W.

Datum: NAD 83

(6) *Southampton Shoal Channel/Richmond Harbor RNA:* The following, consisting of two distinct areas, is a regulated navigation area—

(i) The waters bounded by a line connecting the following coordinates, beginning at:

37°54′ 17″ N, 122°22′ 00″ W; thence to
37°54′ 08″ N, 122°22′ 00″ W; thence to
37°54′ 15″ N, 122°23′ 12″ W; thence to
37°54′ 30″ N, 122°23′ 09″ W; thence along the shoreline to the point of beginning.

Datum: NAD 83

(ii) The waters bounded by a line connecting the following coordinates, beginning at:

37°54′ 28″ N, 122°23′ 36″ W; thence to
37°54′ 20″ N, 122°23′ 38″ W; thence to
37°54′ 23″ N, 122°24′ 02″ W; thence to
37°54′ 57″ N, 122°24′ 51″ W; thence to
37°55′ 05″ N, 122°25′ 02″ W; thence to
37°54′ 57″ N, 122°25′ 22″ W; thence to
37°54′ 00″ N, 122°25′ 13″ W; thence to
37°53′ 59″ N, 122°25′ 22″ W; thence to
37°55′ 30″ N, 122°25′ 35″ W; thence to
37°55′ 40″ N, 122°25′ 10″ W; thence to
37°54′ 54″ N, 122°24′ 30″ W; thence to
37°54′ 30″ N, 122°24′ 00″ W; thence returning to the point of beginning.

Datum: NAD 83

(7) *Oakland Harbor RNA.* The following is a regulated navigation area—The waters bounded by a line connecting the following coordinates, beginning at:

37°48′ 40″ N, 122°19′ 58″ W; thence to
37°48′ 50″ N, 122°20′ 02″ W; thence to
37°48′ 20″ N, 122°21′ 00″ W; thence to
37°48′ 15″ N, 122°21′ 30″ W; thence to
37°48′ 20″ N, 122°22′ 12″ W; thence to
37°47′ 26″ N, 122°21′ 45″ W; thence to
37°47′ 55″ N, 122°21′ 26″ W; thence to
37°48′ 03″ N, 122°21′ 00″ W; thence to
37°47′ 48″ N, 122°19′ 46″ W; thence to
37°47′ 55″ N, 122°19′ 43″ W; thence returning along the shoreline to the point of the beginning.

Datum: NAD 83

(d) *General Regulations.* (1) A power-driven vessel of 1600 or more gross tons, or a tug with a tow of 1600 or more gross tons, navigating within the RNAs defined in paragraph (c) of this section, shall not exceed a speed of 15 knots through the water.

(2) A power-driven vessel of 1600 or more gross tons, or a tug with a tow of 1600 or more gross tons, navigating within the RNAs defined in paragraph (c) of this section, shall have its engine(s) ready for immediate maneuver and shall operate its engine(s) in a control mode and on fuel that will allow for an immediate response to any engine order, ahead or astern, including stopping its engine(s) for an extended period of time.

(3) The master, pilot or person directing the movement of a vessel within the RNAs defined in paragraph (c) of this regulation shall comply with Rule 9 of the Inland Navigation Rules (INRs) (33 U.S.C. 2009) in conjunction with the provisions of the associated INRs.

(e) *Specific Regulations*—(1) *San Francisco Bay RNA:* (i) A vessel shall navigate with particular caution in a precautionary area, or in areas near the terminations of traffic lanes or channels, as described in this regulation.

(ii) A power-driven vessel of 1600 or more gross tons, or a tug with a tow of 1600 or more gross tons, shall:

(A) use the appropriate traffic lane and proceed in the general direction of traffic flow for that lane;

(B) use the Central Bay Deep Water Traffic Lane if eastbound with a draft of 45 feet or greater or westbound with a draft of 28 feet or greater;

(C) not enter the Central Bay Deep Water Traffic Lane when another power-driven vessel of 1600 or more gross tons or tug with a tow of 1600 or more gross tons is navigating therein when either vessel is:

(*1*) carrying certain dangerous cargoes (as denoted in section 160.203 of this subchapter);

(*2*) carrying bulk petroleum products; or

(*3*) a tank vessel in ballast if such entry would result in meeting, crossing, or overtaking the other vessel.

(D) normally join or leave a traffic lane at the termination of the lane, but when joining or leaving from either side, shall do so at as small an angle to the general direction of traffic flow as practicable;

(E) so far as practicable keep clear of the Central Bay Separation Zone and the Deep Water Lane Separation Zone;

(F) not cross a traffic lane separation zone unless crossing, joining, or leaving a traffic lane.

(2) *Pinole Shoal Channel RNA:* (i) The use of Pinole Shoal Channel RNA is reserved for navigation of vessels with a draft greater than 20 feet or tugs with tows drawing more than 20 feet. Vessels drawing less than 20 feet are not permitted within this RNA and are prohibited from crossing it at any point.

(ii) A power-driven vessel of 1600 or more gross tons or a tug with a tow of 1600 or more gross tons shall not enter Pinole Shoal Channel RNA when another power-driven vessel of 1600 or more gross tons or tug with a tow of 1600 or more gross tons is navigating therein when either vessel is:

(A) carrying certain dangerous cargoes (as denoted in section 160.203 of this subchapter);

(B) carrying bulk petroleum products; or

(C) a tank vessel in ballast if such entry would result in meeting, crossing, or overtaking the other vessel.

(iii) Vessels permitted to use this channel shall proceed at a reasonable speed so as not to endanger other vessels or interfere with any work which may become necessary in maintaining, surveying, or buoying the channel, and they shall not anchor in the channel except in case of a deviation authorized under paragraph (b) of this section.

(iv) This paragraph shall not be construed as prohibiting any necessary use of the channel by any public vessels while engaged in official duties, or in emergencies by pilot boats.

(3) *Southern Pacific Railroad Bridge (RNA):* (i) When visibility is less than 1000 yards within the Southern Pacific Railroad Bridge RNA, a power-driven vessel of 1600 or more gross tons, or a tug with a tow of 1600 or more gross tons:

(A) When eastbound, shall not transit through the RNA.

(B) When westbound:

(*1*) During periods of reduced visibility and immediately prior to passing New York Point, the master, pilot, or person directing the movement of a vessel shall obtain a report of visibility conditions within the RNA.

(*2*) If visibility within the RNA is less than 1000 yards, the vessel shall not transit the RNA. Vessels prevented from transiting due to low visibility shall not proceed past Mallard Island until visibility improves to greater than 1000 yards within the RNA.

(*3*) If a transit between New York Point and the Southern Pacific Railroad Bridge has commenced, and the visibility subsequently should become less than 1000 yards, the master, pilot, or person directing the movement of a vessel shall comply with paragraph (b) of this section and may proceed, taking all further appropriate actions in the interest of safety.

(ii) Visibility is considered to be 1000 yards or greater when both the following geographical points can be seen from the Southern Pacific Railroad Bridge:

(A) The Port of Benecia Pier, and

(B) The Shell Martinez Pier.

(4) *Southampton Shoal/Richmond Harbor RNA:* A power-driven vessel of 1600 or more gross tons, or a tug with a tow of 1600 or more gross tons, shall not enter Southampton Shoal/Richmond Harbor RNA when another power-driven vessel of 1600 or more gross tons, or

a tug with a tow of 1600 or more gross tons, is navigating therein, if such entry would result in meeting, crossing, or overtaking the other vessel.

(5) *Oakland Harbor RNA:* A power-driven vessel of 1600 or more gross tons or a tug with a tow of 1600 or more gross tons shall not enter the Oakland Harbor RNA when another power-driven vessel of 1600 or more gross tons, or a tug with a tow of 1600 or more gross tons, is navigating therein, if such entry would result in meeting, crossing, or overtaking the other vessel.

[CGD11–94–007, 60 FR 16796, Apr. 3, 1995; 60 FR 30157, June 7, 1995]

THIRTEENTH COAST GUARD DISTRICT

§165.1115 Safety/Security Zone: San Francisco Bay, San Pablo Bay, Carquinez Strait, and Suisun Bay, CA.

(a) *Regulated area.* The following area is established as a moving safety/security zone:

(1) All waters 200 yards ahead and astern and 100 yards to each side of every vessel transporting nuclear materials on behalf of the United States Department of Energy while such vessels transit from a line drawn between San Francisco Main Ship Channel buoys 7 and 8 (LLNR 4190 & 4195, positions 37°46.9′N, 122°35.4′W & 37°46.5′N, 122°35.2′W, respectively) until safely moored at the Weapons Support Facility Seal Beach Detachment Concord on Suisun Bay (position 38°03.3′N, 122°02.5′W). All coordinates referenced use datum: NAD 1983.

(2) All waters within 100 yards of such vessels described in paragraph (a)(1) of this section while such vessels are conducting cargo operations at the Weapons Support Facility Seal Beach Detachment Concord.

(b) *Notification.* Commander, Eleventh Coast Guard District, will cause notice of the activation of this safety/security zone to be made by all appropriate means to effect the widest publicity among the affected segments of the public, including publication in the FEDERAL REGISTER as practicable, in accordance with the provisions of 33 CFR 165.7(a); such means of announcement may include, but are not limited to, Broadcast Notice to Mariners. The Coast Guard will issue a Broadcast Notice to Mariners notifying the public when nuclear materials cargo handling has been completed.

(c) *Effective Period.* The safety/security zone will be effective commencing at the time any vessel described in paragraph (a)(1) of this section enters the zone described in paragraph (a)(1) of this section and will remain in effect until all spent nuclear materials cargo handling operations have been completed at Weapons Support Facility Seal Beach Detachment Concord.

(d) *Regulations.* The general regulations governing safety and security zones contained in both 33 CFR 165.23 in 33 CFR 165.33 apply. Entry into, transit through, or anchoring within this moving safety/security zone is prohibited unless authorized by Commander, Eleventh Coast Guard District, or his designated representative.

[CGD11–98–005, 63 FR 38754, July 20, 1998]

§165.1116 Copper Canyon, Lake Havasu, Colorado River—Regulated Navigation Area.

(a) *Location.* The following is a regulated navigation area:

(1) In the water area of Copper Canyon, Lake Havasu, Colorado River, beginning at the approximate center of the mouth of Copper Canyon and drawing a line down the approximate center of the canyon extending shoreward to the end of the navigable waters of the canyon, and comprising a semi-rectangular area extending 30 feet on each side of the line, for a total semi-rectangular width of 60 feet.

(2) This line is more precisely described as: beginning at latitude 34°25′67.6″N, longitude 114°18′38.5″W, thence southwesterly to latitude 34°25′64″N, longitude 114°18′45.7″W, thence northwesterly to latitude 34°25′65.6″N, longitude 114°18′46.7″W, thence southeasterly to latitude 34°25′60.7″N, longitude 114°18′42.7″W, thence southwesterly to longitude 34°25′51.4″N, latitude 114°18′46.2″W, thence southeasterly to latitude 34°25′47.1″N, longitude 114°18′49.4″W, thence to the end of the navigable waters of the canyon.

(b) *Definitions.* For the purposes of this section:

(1) *Vessel:* Every description of watercraft, used or capable of being used as a means of transportation on the water, and regardless of mode of power.

(2) *Patrol Vessel:* Vessels designated by the Captain of the Port, San Diego, to enforce or assist in enforcing these regulations, including Coast Guard, Coast Guard Auxiliary, and San Bernardino County Sheriff's Department Vessels.

(c) *Regulations.* (1) Vessels, with the exception of patrol vessels, shall not anchor, moor, loiter in, or otherwise impede the transit of any other vessel within the regulated navigation area. Furthermore, all vessels, with the exception of patrol vessels, shall expeditiously and continuously transit the regulated navigation area via the most direct route consistent with navigational safety.

(2) During periods of vessels congestion within the Copper Canyon area, as determined by the Captain of the Port or his or her designated on-scene representative, the regulated navigation area will be closed to all vessels, with the exception of patrol vessels. During designated closure periods, no vessel may enter, remain in, or transit through the regulated navigation area, with the exception of patrol vessels. Designation of periods of vessel congestion and announcement of the closure of the regulated navigation area will be conducted by broadcast notices to mariners on VHF–FM Channel 16 no less frequently than every hour for the duration of the closure period.

(3) Each person in the regulated navigation area shall comply with the directions of the Captain of the Port or his or her designated on-scene representative regarding vessel operation.

[CGD11–97–010, 63 FR 38308, July 16, 1998]

§ 165.1301 Puget Sound and Adjacent Waters in Northwestern Washington—Regulated Navigation Area.

The following is a regulated navigation area—All of the following northwestern Washington waters under the jurisdiction of the Captain of the Port, Puget Sound: Puget Sound, Hood Canal, Possession Sound, Elliott Bay, Commencement Bay, the San Juan Archipelago, Rosario Strait, Guemes Channel, Bellingham Bay, U.S. waters of the Strait of the Strait of Juan de Fuca, Haro Strait, Boundary Pass, and Georgia Strait, and all lesser bays and harbors adjacent to the above.

(a) Definitions as used in this section:

(1) *Vessels engaged in fishing* are as identified in the definition found in Rule 3 of the International Regulations for Prevention of Collisions at Sea, 1972, (72 COLREGS), found in Appendix A, Part 81 of this chapter.

(2) *Hazardous levels of vessel traffic congestion* are as defined at the time by Puget Sound Vessel Traffic Service.

(b) Nothing in this section shall be construed as relieving any party from their responsibility to comply with applicable rules set forth in the 72 COLREGS.

(c) General Regulations: The provisions of this paragraph apply at all times.

(1) Vessels engaged in fishing or other operations—that are distinct from vessels following a TSS or a connecting precautionary area east of New Dungeness and which are not required by the Bridge to Bridge Radiotelephone Regulations to maintain a listening watch, are highly encouraged to maintain a listening watch on the Puget Sound Vessel Traffic Service (PSVTS) VHF–FM radio frequency for the area in which the vessel is operating. A safe alternative to the radio listening watch is to stay clear of the TSS and connecting precautionary area.

(2) Vessels engaged in gill net fishing at any time between sunset and sunrise in any of the waters defining the regulated navigation are of this section shall, in addition to the navigation lights and shapes required by Part 81 of this title (72 COLREGS), display at the end of the net most distant from the vessel on all-round (32-point) white light visible for a minimum of two nautical miles and displayed from at least three feet above the surface of the water.

(3) Vessels engaged in fishing, including gillnet and purse seine fishing, are prohibited in the following Prohibited Fishing Area: The Hood Canal Bridge, to include the waters within a one-half nautical mile radius of the center of

the main ship channel draw span during the immediate approach and transit of the draw by public vessels of the United States.

(4) East of New Dungeness, vessels engaged in fishing in a traffic lane or connecting precautionary area shall tend nets or other gear placed in the water so as to facilitate the movement of the vessel or gear from the traffic lane or precautionary area upon the approach of a vessel following the TSS.

(d) Congested Regulations: The provisions under this paragraph apply only when imposed in specific locations by Puget Sound Vessel Traffic Service. They are intended to enhance vessel traffic safety during periods and in locations where hazardous levels of vessel traffic congestion are deemed to exist by Puget Sound Vessel Traffic Service. Operations potentially creating vessel traffic congestion include, but are not limited to, vessels engaged in fishing, including gillnet or purse seine, recreational fishing derbies, regattas, or permitted marine events.

(1) Vessels engaged in fishing or other operations—that are distinct from vessels following a Traffic Separation Scheme (TSS) or a connecting precautionary area east of New Dungeness, may not remain in, nor their gear remain in, a traffic lane or a connecting precautionary area east of New Dungeness when a vessel following a TSS approaches. Such vessels not following a TSS or a connecting precautionary area shall draw in their gear, maneuver, or otherwise clear these areas so that their action is complete at least fifteen minutes before the arrival of a vessel following the TSS. Vessels which are required by this paragraph to remain clear of a connecting precautionary area east of New Dungeness or a traffic lane must also remain clear of the adjacent separation zone when in a TSS east of New Dungeness.

(2) A vessel following the TSS may not exceed a speed of 11 knots through the water.

(3) Vessels engaged in fishing, including gillnet and purse seine fishing, are prohibited in the following Prohibited Fishing Area: Edmonds/Kingston ferry crossing lanes, to include the waters within one-quarter nautical mile on either side of a straight line connecting the Edmonds and Kingston ferry landings during the hours that the ferry is operating.

(e) Authorization to deviate from this section.

(1) Commander, Thirteenth Coast Guard District may, upon written request, issue an authorization to deviate from this section if the proposed deviation provides a level of safety equivalent to or beyond that provided by the required procedure. An application for authorization must state the need for the deviation and describe the proposed alternative operation.

(2) PSVTS may, upon verbal request, authorize a deviation from this section for a voyage, or part of a voyage, if the proposed deviation provides a level of safety equivalent to or beyond that provided by the required procedure. The deviation request must be made well in advance to allow the requesting vessel and the Vessel Traffic Center (VTC) sufficient time to assess the safety of the proposed deviation. Discussions between the requesting vessel and the VTC should include, but are not limited to, information on vessel handling characteristics, traffic density, radar contracts, and environmental conditions.

(3) In an emergency, the master, pilot, or person directing the movement of the vessel following the TSS may deviate from this section to the extent necessary to avoid endangering persons, property, or the environment, and shall report the deviation to the VTC as soon as possible.

[CGD 13–98–002, 63 FR 7708, Feb. 17, 1998]

§165.1302 Bangor Naval Submarine Base, Bangor, WA.

(a) *Location*. The following is a security zone: The waters of the Hood Canal encompassed by a line commencing on the east shore of Hood Canal at latitude 47°43′17″ N., longitude 122°44′44″ W., thence to latitude 47°43′32″ N., longitude 122°44′40″ W.; thence to latitude 47°43′50″ N., longitude 122°44′40″ W.; thence to latitude 47°44′24″ N., longitude 122°44′22″ W.; thence to latitude 47°45′47″ N., longitude 122°43′22″ W.; thence to latitude 47°46′23″ N., longitude 122°42′42″ W.; thence to latitude 47°46′23″ N., longitude 122°42′20″ W.;

thence to latitude 47°46′20″ N., longitude 122°42′12″ W.: thence southerly along the shoreline to the point of beginning.

(b) *Security zone anchorage.* The following is a security zone anchorage: Area No. 2. Waters of Hood Canal within a circle of 1,000 yards diameter centered on a point located at latitude 47°46′26″ N., longitude 122°42′49″ W.

(c) *Special Regulations.* (1) Section 165.33 paragraphs, (a), (e), and (f) do not apply to the following vessels or individuals on board those vessels:

(i) Public vessels of the United States, other than United States Naval vessels.

(ii) Vessels that are performing work at Naval Submarine Base Bangor pursuant to a contract with the United States Navy which requires their presence in the security zone.

(iii) Any other vessels or class of vessels mutually agreed upon in advance by the Captain of the Port and Commanding Officer, Naval Submarine Base Bangor. Vessels operating in the security zone under this exemption must have previously obtained a copy of a certificate of exemption permitting their operation in the security zone from the Security Office, Naval Submarine Base Bangor. This written exemption shall state the date(s) on which it is effective and may contain any further restrictions on vessel operations within the security zone as have been previously agreed upon by the Captain of the Port and Commanding Officer, Naval Submarine Base Bangor. The certificate of exemption shall be maintained on board the exempted vessel so long as such vessel is operating in the security zone.

(2) Any vessel authorized to enter or remain in the security zone may anchor in the security zone anchorage.

(3) Other vessels desiring access to this zone shall secure permission from the Captain of the Port through the Security Office of the Naval Submarine Base Bangor. The request shall be forwarded in a timely manner to the Captain of the Port by the appropriate Navy official.

(d) *Enforcement.* The U.S. Coast Guard may be assisted in the patrol and monitoring of this security zone by the U.S. Navy.

[CDG13 87–06, 52 FR 47924, Dec. 17, 1987]

§ 165.1303 Puget Sound and adjacent waters, WA-regulated navigation area.

(a) The following is a regulated navigation area: the waters of the United States east of a line extending from Discovery Island Light to New Dungeness Light and all points in the Puget Sound area north and south of these lights.

(b) *Regulations.* (1) Tank vessel navigation restrictions: Tank vessels larger than 125,000 deadweight tons bound for a port or place in the United States may not operate in the regulated navigation area.

(2) Commander, Thirteenth Coast Guard District may, upon written request, issue an authorization to deviate from paragraph (b)(1) of this section if it is determined that such deviation provides an adequate level of safety. Any application for authorization must state the need and fully describe the proposed procedure.

(c) *Precautionary Area Regulations.* (1) A vessel in a precautionary area which is depicted on National Oceanic and Atmospheric Administration (NOAA) nautical charts, except precautionary ''RB'' (a circular area of 2,500 yards radius centered at 48–26′ 24″ N., 122–45′ 12″ W.), must keep the center of the precautionary area to port.

NOTE: The center of precautionary area ''RB'' is not marked by a buoy.

(2) The Puget Sound Vessel Traffic Service (PSVTS) may, upon verbal request, authorize a onetime deviation from paragraph (c)(1) of this section for a voyage, or part of a voyage, if the proposed deviation provides a level of safety equivalent to or beyond that provided by the required procedure. The deviation request must be made well in advance to allow the requesting vessel and the Vessel Traffic Center (VTC) sufficient time to assess the safety of the proposed deviation. Discussions between the requesting vessel and the VTC should include, but are not limited to, information on the vessel handling characteristics, traffic density, radar contacts, and environmental conditions.

(3) In an emergency, the master, pilot, or person directing the movement of the vessel may deviate from paragraph (c)(1) of this section to the extent necessary to avoid endangering persons, property, or the environment, and shall report the deviation to the VTC as soon as possible.

[CGD 90–020, 59 FR 36335, July 15, 1994, as amended by CGD 13–97–003, 62 FR 23660, May 1, 1997]

§165.1304 Bellingham Bay, Bellingham, WA.

(a) *Location.* The following area is a safety zone: All waters of Bellingham Bay, Washington, bounded by a circle with a radius of 1000 yards centered on the fireworks launching site located on the Georgia Pacific Lagoon Seawall at position latitude 48°44′ 56″ N, longitude 122°29′ 40″ W, including the entrances to the I & J Street Waterway and the Whatcom Creek Waterway. [Datum: NAD 83]

(b) *Effective dates.* This section is effective annually on July fourth from 9:30 p.m. to 11 p.m. unless otherwise specified by FEDERAL REGISTER notice.

(c) *Regulation.* In accordance with the general regulations in §165.23 of this part, entry into this safety zone is prohibited unless authorized by the Captain of the Port, Puget Sound, Seattle, WA.

[CGD13–95–008, 60 FR 61480, Nov. 30, 1995, as amended by CGD 13–96–028, 61 FR 47824, Sept. 11, 1996]

§165.1305 Commencement Bay, Tacoma, WA.

(a) *Location.* The following area is a safety zone: All portions of Commencement Bay bounded by the following coordinates: Latitude 47°17′ 34″ N, Longitude 122°28′ 36″ W; thence to Latitude 47°17′ 06″ N, Longitude 122°27′ 40″ W; thence to Latitude 47°16′ 42″ N, Longitude 122°28′ 06″ W; thence to Latitude 47°17′ 10″ W, Longitude 122°29′ 02″ W; thence returning to the origin. This safety zone resembles a rectangle lying adjacent to the shoreline along Ruston Way. Floating markers will be placed by the sponsor of the event to delineate the boundaries of the safety zone. [Datum: NAD 1983].

(b) *Effective dates.* This section is effective annually on July the fourth from 2 p.m. to 12:30 a.m. July the fifth unless otherwise specified by FEDERAL REGISTER notice.

(c) *Regulation.* In accordance with the general regulations in §165.23 of this part, entry into this safety zone is prohibited unless authorized by the Captain of the Port, Puget Sound, Seattle, WA.

[CGD13–95–009, 60 FR 61481, Nov. 30, 1995]

§165.1306 Lake Union, Seattle, WA.

(a) *Location.* The following area is a safety zone: All portions of the waters of Lake Union bounded by the following coordinates: Latitude 47°38′ 32″ N, Longitude 122°20′ 34″ W; thence to Latitude 47°38′ 32″ N, Longitude 122°19′ 48″ W; thence to Latitude 47°38′ 10″ N, Longitude 122°19′ 45″ W; thence to Latitude 47°38′ 10″ N, Longitude 122°20′ 24″ W; thence returning to the origin. This safety zone begins 1,000 feet south of Gas Works Park and encompasses all waters from east to west for 2,500 feet. Floating markers will be placed by the sponsor of the fireworks demonstration to delineate the boundaries of the safety zone. [Datum: NAD 1983]

(b) *Effective dates.* This section is effective annually on July fourth from 9:30 p.m. to 11 p.m. unless otherwise specified by FEDERAL REGISTER notice.

(c) *Regulation.* In accordance with the general regulations in §165.23 of this part, entry into the safety zone is prohibited unless authorized by the Captain of the Port, Puget Sound, Seattle, WA. The Captain of the Port may establish transit lanes along the east and west shorelines of Lake Union and may allow boaters to transit north and south through the safety zone in these lanes. If established, these transit lanes will remain open until 10 p.m. and then be closed until the end of the fireworks display (approximately 30 minutes).

[CGD13–95–010, 60 FR 61483, Nov. 30, 1995]

§165.1307 Elliott Bay, Seattle, WA.

(a) *Location.* The following area is a safety zone: All portions of Elliott Bay bounded by the following coordinates: Latitude 47°37′22″ N, Longitude 122°22′06″ W; thence to Latitude 47°37′06″ N, Longitude 122°21′45″ W; thence to Latitude 47°36′54″ N, Longitude

122°22′05″ W; thence to Latitude 47°37′08″ N, Longitude 122°22′27″ W; thence returning to the origin. This safety zone resembles a square centered around the barge from which the fireworks will be launched and begins 100 yards from the shoreline of Myrtle Edwards Park. Floating markers will be placed by the sponsor of the fireworks display to delineate the boundaries of the safety zone [Datum NAD 1983].

(b) *Effective dates.* This section is effective annually on July fourth from 9:30 p.m. to 11 p.m. unless otherwise specified by FEDERAL REGISTER notice.

(c) *Regulation.* In accordance with the general regulations in § 165.23 of this part, entry into this safety zone is prohibited unless authorized by the Captain of the Port, puget sound, Seattle, WA.

[CGD13–95–007, 60 FR 61482, Nov. 30, 1995, as amended by CGD13–97–015, 62 FR 39445, July 23, 1997]

§ 165.1308 Columbia River, Vancouver, WA.

(a) *Location.* The following area is a safety zone: All waters of the Columbia River at Vancouver, Washington, bounded by a line commencing at the northern base of the Interstate 5 highway bridge at latitude 45°37′ 17″ N, longitude 122°40′ 22″ W; thence south along the Interstate 5 highway bridge to latitude 45°37′ 03″ N, longitude 122°40′ 32″ W; thence to latitude 45°36′ 28″ N, longitude 122°38′ 35″ W; thence to Ryan's Point at latitude 45°36′ 42″ N, longitude 122°38′ 35″ W; thence along the Washington shoreline to the point of origin. [Datum: NAD 83].

(b) *Effective dates.* This section is effective annually on July fourth from 9 p.m. to 11 p.m. (PDT) unless otherwise specified by FEDERAL REGISTER notice.

(c) *Regulation.* In accordance with the general regulations in § 165.23 of this part, entry into this safety zone is prohibited unless authorized by the Captain of the Port, Portland, Oregon.

[CGD13–95–055, 61 FR 18949, Apr. 30, 1996]

FOURTEENTH COAST GUARD DISTRICT

§ 165.1310 Strait of Juan de Fuca and adjacent coastal waters of Northwest Washington; Makah Whale Hunting—Regulated Navigation Area.

(a) The following area is a Regulated Navigation Area (RNA): From 48°10.0′ N, 124°42.1′ W northward along the mainland shoreline of Washington State to Cape Flattery and thence eastward along the mainland shoreline of Washington State to 48°22′ N, 124°34′ W; thence due north to 48°24.5′ N, 124°34′ W; thence northwesterly to 48°27.1′ N, 124°41.8′ W; thence due west to 48°27.1′ N, 124°45.5′ W; thence southwesterly to 48°22.7′ N, 124°49.3′ W; thence southerly along the three nautical mile line to 48°15′ N, 124°47.6′ W; thence due east back to the shoreline of Washington at 48°15′ N, 124°42.1′ W. Datum: NAD 1983.

(b) During a whale hunt, while the international numeral pennant five (5) is flown by a Makah whale hunt vessel, the following area within the RNA is a Moving Exclusion Zone: The column of water from the surface to the seabed with a radius of 500 yards centered on the Makah whale hunt vessel displaying international numeral pennant five (5). This Moving Exclusionary Zone is activated only when surface visibility exceeds one nautical mile, between sunrise and sunset, and the Makah whale hunt vessel displays the international numeral pennant five (5). The Moving Exclusionary Zone is deactivated upon sunset, visibility is reduced to less than one nautical mile, or when the Makah hunt vessel strikes international numeral pennant five (5).

(c) Unless otherwise authorized by the Commander, Thirteenth Coast Guard District or his or her representative, no person or vessel may enter the active Moving Exclusionary Zone except for:

(1) Authorized Makah whale hunt vessel actively engaged in hunting operations under direction of the master of the Makah vessel flying international numeral pennant five (5), and

(2) A single authorized media pool vessel operating in accordance with paragraph (f) of this section.

(d) The international numeral pennant five (5) is only authorized to be displayed from one Makah whale hunt vessel during actual whale hunt operations. No other vessels may display this pennant within the RNA at any time. Whale hunt operations commence when a whale hunt vessel is underway and its master intends to have a whale killed during the voyage. Whale hunt operations cease once this intent is abandoned, a whale is landed, or when the international numeral pennant five (5) is struck.

(e) The Makah Tribe shall make SECURITE Broadcasts beginning one hour before the commencement of a hunt and every half hour thereafter until hunting activities are concluded. This broadcast shall be made on channel 16 VHF–FM and state:

A whale hunt is proceeding today within the Regulated Navigation Area established for Makah whaling activities. The (name of vessel) is a (color and description of vessel) and will be flying international numeral pennant five (5) while engaged in whaling operations. This pennant is yellow and blue in color. Mariners are required by federal regulations to stay 500 yards away from (name of vessel), and are strongly urged to remain even further away from whale hunt activities as an additional safety measure.

(f)(1) Credentialed members of the media interested in entering the Moving Exclusionary Zone may request permission to operate a single media vessel in the Moving Exclusionary Zone by telephoning Coast Guard Public Affairs, as soon as practicable at (206) 220–7237 during normal working hours, and (206) 220–7001 after hours. Coast Guard preauthorization is required prior to entry into the Moving Exclusionary Zone by a single media pool vessel.

(2) The media pool vessel must be a U.S. documented vessel. The media pool vessel must be under command at all times within the Moving Exclusionary zone by a master licensed in the U.S. to carry passenger for hire. All expenses, liabilities and risks associated with operation of the media pool vessel lie with members of the pool and the pool vessel owners and operators.

(3) The master of the media pool vessel shall maneuver to avoid positioning the pool vessel between whales and hunt vessel(s), out of the line of fire, at a prudent distance and location relative to whale hunt operations, and in a manner that avoids hindering the hunt or path of the whale in any way.

(4) Although permitted to maneuver within the Moving Exclusionary Zone, personnel aboard the media pool vessel are still required to follow safety and law enforcement related instructions of Coast Guard personnel.

[CGD 13–98–023, 63 FR 52609, Oct. 1, 1998]

§ 165.1401 Apra Harbor, Guam—safety zones.

(a) The following is designated as Safety Zone A—The waters of the Pacific Ocean and Apra Outer Harbor encompassed within an arc of 725 yards radius centered at the center of Wharf H. (Located at 13°27′ 47′ ′N and 144°39′ 01.9″E. Based on World Geodetic System 1984 Datum)

(b) The following is designated Safety Zone B—The waters of Apra Outer Harbor encompassed within an arc of 680 yards radius centered at the center of Naval Wharf Kilo. (Located at 13°26′ 43′ ′N, 144°37′ 46.7″E. Based on World Geodetic system 1984 Datum)

(c) Special regulations. (1) Section 165.23 does not apply to Safety Zone A and/or Safety Zone B, except when Wharf H and/or Naval Wharf Kilo, or a vessel berthed at Wharf H and/or Naval Wharf Kilo, is displaying a red (BRAVO) flag by day or a red light by night.

(2) In accordance with the general regulations in 165.23 of this part, entry into these zones is prohibited unless authorized by the Captain of the Port, Guam.

[COTP Guam Reg. 89–001, 55 FR 18725, May 4, 1990]

§ 165.1402 Apra Outer Harbor, Guam—regulated navigation area.

(a) The following is a regulated navigation area—The waters of the Pacific Ocean and Apra Outer Harbor enclosed by a line beginning at latitude 13°26′ 47′ ′N, longitude 144°35′ 07″E; thence to Spanish Rocks at latitude 13°27′ 09.5′ ′N, longitude 144°37′ 20.6″E; thence along

the shoreline of Apra Outer Harbor to latitude 13°26′ 28.1′ ′N, longitude 144°39′ 52.5″E (the northwest corner of Polaris Point); thence to latitude 13°26′ 40.2′ ′N, longitude 144°39′ 28.1″E; thence to latitude 13°26′ 32.1′ ′N, longitude 144°39′ 02.8″E; thence along the shoreline of Apra Outer Harbor to Orote Point at latitude 13°26′ 42′ ′N, longitude 144°36′ 58.5″E; thence to the beginning. (Based on WGS 84 Datum)

(b) Regulations:

(1) Except for public vessels of the United States, vessels may not enter Apra Outer Harbor without permission of the Captain of the Port if they have on board more than 25 tons of high explosives.

(2) Except for vessels not more than 65 feet in length, towboats or tugs without tows, no vessel may pass another vessel in the vicinity of the Outer Harbor entrance.

(3) Vessels over 100 gross tons shall:

(i) Steady on the entrance range at least 2 miles west of the entrance when approaching Apra Outer Harbor and;

(ii) [Reserved]

(iii) Steady on the range when departing Apra Outer Harbor.

(4) Vessels may not anchor in the fairway. The fairway is the area within 375 feet on either side of a line beginning at latitude 13°26′ 47′ ′N, longitude 144°35′ 07″E; thence to latitude 13°27′ 14.1′ ′N, longitude 144°39′ 14.4″E; thence to latitude 13°26′ 35.2′ ′N, longitude 144°39′ 46.4″E; thence to latitude 13°26′ 30.8′ ′N, longitude 144°39′ 44.4″E. (Based on WGS 84 Datum)

(5) Vessels over 100 gross tons may not proceed at a speed exceeding 12 knots within the harbor.

(6) No vessel may leave Apra Outer Harbor until any inbound vessel over 65 feet in length has cleared the Outer Harbor Entrance.

[CGD 79–034, 47 FR 29660, July 8, 1982, as amended by CGD 96–026, 61 FR 33669, June 28, 1996; USCG–1998–3799, 63 FR 35533, June 30, 1998]

§ 165.1403 Security Zone: Tinian, Commonwealth Northern Marianas Islands.

(a) *Location*. The following is designated as a security zone: The waters of the Pacific Ocean off Tinian between 14°59′04.9″ N, 145°34′58.6″ E to 14°59′20.1″ N, 145°35′41.5″ E to 14°59′09.8″ N, 145°36′02.1″ E to 14°57′49.3″ N, 145°36′28.7″ E to 14°57′29.1″ N, 145°35′31.1″ E and back to 14°59′04.9″ N, 145°34′58.6″ E. This zone is in effect when one, or more, of the Maritime Preposition Ships is in the zone or moored at Mooring A located at 14°58′57.0″ N and 145°35′40.8″ E or Mooring B located at 14°58′15.9″ N, 145°35′54.8″ E. Additionally, a 50-yard security zone will remain in effect in all directions around Moorings A and B when no vessels are moored thereto.

NOTE: All positions of latitude and longitude are from International Spheroid, Astro Pier 1944 (Saipan) Datum (DMA Chart 81071).

(b) *Regulations*. (1) In accordance with general regulations in § 165.33 of this part, entry into this security zone is prohibited unless authorized by the Captain of the Port.

[COTP Honolulu Reg. 86–08, 51 FR 42220, Nov. 24, 1986]

§ 165.1404 Apra Harbor, Guam—security zone.

(a) The following is designated as Security Zone C—The waters of Apra Outer Harbor, Guam surrounding Naval Mooring Buoy No. 702 (Located at 13°27′ 30.1′ ′N and 144°38′ 12.9″E. Based on World Geodetic System 1984 Datum) and the Maritime Prepositioning ships moored thereto. The security zone will extend 100 yards in all directions around the vessel and its mooring. Additionally, a 50 yard security zone will remain in effect in all directions around buoy No. 702 when no vessel is moored thereto.

(b) In accordance with the general regulations in § 165.33 of this part, entry into Security Zone C is prohibited unless authorized by the Captain of the Port, Guam.

[COTP Guam Reg. 89–001, 55 FR 18725, May 4, 1990]

§ 165.1406 Safety Zone: Pacific Missile Range Facility (PMRF), Barking Sands, Island of Kauai, Hawaii.

(a) *Location*. The following area is established as a safety zone during launch operations at PMRF, Kauai, Hawaii: The waters bounded by the following coordinates: (22° 01.2′N, 159° 47.3′W), (22° 01.2′N, 159° 50.7′W), (22°

06.3′N, 159° 50.7′W), (22° 06.3′N, 159° 44.8′W). (Datum: OHD)

(b) *Activation*. The above safety zone will be activated during launch operations at PMRF, Kauai, Hawaii. The Coast Guard will provide notice that the safety zone will be activated through published and broadcast local notice to mariners prior to scheduled launch dates.

(c) *Regulation*. The area described in paragraph (a) of this section will be closed to all vessels and persons, except those vessels and persons authorized by the Commander, Fourteenth Coast Guard District, or the Captain of the Port (COTP) Honolulu, Hawaii, whenever Strategic Target System (STARS) vehicles are to be launched by the United States Government from the PMRF, Barking Sands, Kauai, Hawaii.

(d) The general regulations governing safety zones contained in 33 CFR 165.23 apply.

[CGD14 92–05, 57 FR 54508, Nov. 19, 1992, as amended by CGD 96–026, 61 FR 33669, June 28, 1996]

SEVENTEENTH COAST GUARD DISTRICT

§165.1701 Port Valdez, Valdez, Alaska—safety zone.

The waters within the following boundaries are a safety zone—The area within 200 yards of any waterfront facility at the Trans-Alaska Pipeline Valdez Terminal complex or vessels moored or anchored at the Trans-Alaska Pipeline Valdez Terminal complex and the area within 200 yards of any tank vessel maneuvering to approach, moor, unmoor, or depart the Trans-Alaska Pipeline Valdez Terminal complex.

§165.1702 Gastineau Channel, Juneau, Alaska—safety zone.

(a) The waters within the following boundaries are a safety zone: A line beginning at the Standard Oil Company Pier West Light (LLNR 3217), located at position 58°17.9′N, 134°24.8′W, in the direction of 140° True to Rock Dump Lighted Buoy 2A (LLNR 3213) at position 58°17.2′N, 134°23.8′W; thence in the direction of 003° True to a point at position 58°17.4′N, 134°23.7′W, on the north shore of Gastineau Channel; thence northwesterly along the north shore of Gastineau Channel to the point of origin.

(b) Special Regulations:

(1) All vessels may transit or navigate within the safety zone.

(2) No vessels, other than a large passenger vessel (including cruise ships and ferries) may anchor within the Safety zone without the express consent from the Captain of the Port, Southeast Alaska.

[CGD 79–034, 47 FR 29660, July 8, 1982, as amended by CGD 79–026, 48 FR 35408, Aug. 4, 1983]

§165.1703 Ammunition Island, Port Valdez, Alaska.

(a) The waters within the following boundaries is a safety zone—the area within 1330 yards of Ammunition Island, latitude 61°07′5″N, longitude 146°18′W, and the vessel moored or anchored at Ammunition Island.

(b) The area 200 yards off the vessel navigating the Vessel Traffic system from abeam of Naked Island, maneuvering to approach, moor, unmoor at Ammunition Island, or the departure of the vessel from Ammunition Island.

(c) *Special regulation*. (1) Section 165.23 does not apply to paragraph (a) of this section, except when the vessel is moored to Ammunition Island.

(d) Effective August 25, 1987 Notice of vessels arrival will be made in the Notice to Mariners, Local Notice to Mariners and in the Local Valdez newspaper, prior to the vessel arrival.

[52 FR 30671, Aug. 17, 1987, as amended by USCG–1998–3799, 63 FR 35533, June 30, 1998]

§165.1704 Prince William Sound, Alaska-regulated navigation area.

(a) The following is a regulated navigation area: The navigable waters of the United States north of a line drawn from Cape Hinchinbrook Light to Schooner Rock Light, comprising that portion of Prince William Sound between 146°30′ W. and 147°20′ W. and includes Valdez Arm, Valdez Narrows, and Port Valdez.

(b) Within the regulated navigation area described in paragraph (a) of this section, §161.60 of this chapter establishes a VTS Special Area for the waters of Valdez Arm, Valdez Narrows, and Port Valdez northeast of a line bearing 307° True from Tongue Point at

61°02′06″ N., 146°40′ W.; and southwest of a line bearing 307° True from Entrance Island Light at 61°05′06″ N., 146°36′42″ W.

(c) *Regulations.* In addition to the requirements set forth in § 161.13 and § 161.60(c) of this chapter, a tank vessel of 20,000 deadweight tons or more that intends to navigate within the regulated navigation area must:

(1) Report compliance with part 164 of this chapter, to the Vessel Traffic Center (VTC);

(2) Have at least two radiotelephones capable of operating on the designated VTS frequency, one of which is capable of battery operation;

(3) When steady wind conditions in the VTS Special Area or Port Valdez exceed, or are anticipated to exceed 40 knots, proceed as directed by the VTC (entry into the VTS Special Area and Port Valdez is prohibited);

(4) When transiting the VTS Special Area, limit speed to 12 knots;

(5) If laden and intending to navigate the VTS Special Area, limit speed to 12 knots except between Middle Rock and Potato Point where the speed limit shall be 6 knots; and

(6) Not later than July 1, 1994, have an operating Automatic Identification System Shipborne Equipment (AISSE) system installed.

(i) The designated digital selective calling frequency (DSC) in Prince William Sound is 156.525MHz (VHF Channel 70).

(ii) AISSE equipped vessels will not be required to make voice radio position reports at designated reporting points required by § 161.20(b), unless otherwise directed by the VTC.

(iii) Whenever a vessel's AISSE becomes non-operational, as defined in § 164.43(c) of this chapter, before entering or while underway in the VTS area, a vessel must:

(A) Notify the VTC;

(B) Make the required voice radio position reports as set forth in § 161.60 and required by § 161.20(b) of this chapter;

(C) Make other voice radio reports as required by the VTS; and

(D) Restore the AISSE to operating condition as soon as possible.

(iv) Whenever a vessel's AISSE becomes non-operational due to a loss of position correction information (i.e., the U.S. Coast Guard dGPS system cannot provide the required error correction messages) a vessel must:

(A) Make the required voice radio position reports as set forth in § 161.60 and required by § 161.20(b) of this chapter; and

(B) Make other voice radio reports as required by the VTS.

(v) Whenever a vessel's AISSE becomes non-operational before getting underway in the VTS area, permission to get underway must be obtained from the VTC.

NOTE: Regulations pertaining to Automatic Identification System Shipborne Equipment (AISSE) required capabilities are set forth in Part 164 of this chapter.

[CGD 90–020, 59 FR 36335, July 15, 1994, as amended by CGD 95–033, 60 FR 28333, May 31, 1995; CGD 97–023, 62 FR 33365, June 19, 1997; USCG–1998–3799, 63 FR 35533, June 30, 1998]

§ 165.1706 Gastineau Channel, Juneau, Alaska—Safety Zone.

(a) *Location.* The following area is a safety zone: the waters in Juneau Harbor within a 100 yard radius of the vessel or waterfront facility located at 58° 17′ 41″ N, 134° 24′ 22″ W used to conduct fireworks displays.

(b) *Effective date.* The safety zone becomes effective on July 3 each year at 10 p.m. ADT. It terminates at the conclusion of the fireworks display at approximately 2:30 a.m. ADT on July 5 each year, unless sooner terminated by the Captain of the Port. If the fireworks display is postponed because of inclement weather, the date and duration of the safety zone will be announced in the Local Notices to Mariners.

(c) *Regulation.* In accordance with the general regulations in § 165.23 of this part, entry into this zone is prohibited unless authorized by the Captain of the Port, Southeast Alaska.

[59 FR 31934, June 21, 1994]

§ 165.1707 Crescent Harbor, Sitka, Alaska-Safety Zone.

(a) *Location.* The following area is a safety zone: the waters in Crescent Harbor within a 100 yard radius of the vessel or waterfront facility located at 57°02′ 54″ N, 135°19′ 32″ W used to conduct fireworks displays.

(b) *Effective date.* The safety zone becomes effective on July 3 each year at

10 a.m. ADT. It terminates at the conclusion of the fireworks display at approximately 2:30 a.m. ADT on July 5 each year, unless sooner terminated by the Captain of the Port. If the fireworks display is postponed because of inclement weather, the date and duration of the safety zone will be announced in the Local Notices to Mariners.

(c) *Regulation.* In accordance with the general regulations in §165.23 of this part, entry into this zone is prohibited unless authorized by the Captain of the Port, Southeast Alaska.

[59 FR 31932, June 21, 1994]

§165.1708 Tongass Narrows, Ketchikan, Alaska—Safety Zone.

(a) *Location.* The following area is a safety zone: the waters in Tongass Narrows within a 100 yard radius of the barge located at 55°20′ 20″ N, 131°39′ 36″ W used to conduct fireworks displays.

(b) *Effective date.* The safety zone becomes effective on July 3 each year at 10 p.m. ADT. It terminates at the conclusion of the fireworks display at approximately 2:30 a.m. ADT on July 5 each year, unless sooner terminated by the Captain of the Port. If the fireworks display is postponed because of inclement weather, the date and duration of the safety zone will be announced in the Local Notices to Mariners.

(c) *Regulation.* In accordance with the general regulations in §165.23 of this part, entry into this zone is prohibited unless authorized by the Captain of the Port, Southeast Alaska.

[59 FR 31933, June 21, 1994]

PART 166—SHIPPING SAFETY FAIRWAYS

Subpart A—General

Sec.

166.100 Purpose.
166.103 Geographic coordinates.
166.105 Definitions.
166.110 Modification of areas.

Subpart B—Designations of Fairways and Fairway Anchorages

166.200 Shipping safety fairways and anchorage areas, Gulf of Mexico.
166.300 Areas along the coast of California.
166.400 Areas along the coast of Alaska.
166.500 Areas along the Atlantic Coast.

AUTHORITY: 33 U.S.C. 1223; 49 CFR 1.46.

Subpart A—General

§166.100 Purpose.

The purpose of these regulations is to establish and designate shipping safety fairways and fairway anchorages to provide unobstructed approaches for vessels using U.S. ports.

[CGD 81–80a, 48 FR 30110, June 30, 1983]

§166.103 Geographic coordinates.

Geographic coordinates expressed in terms of latitude or longitude, or both, are not intended for plotting on maps or charts whose referenced horizontal datum is the North American Datum of 1983 (NAD 83), unless such geographic coordinates are expressly labeled NAD 83. Geographic coordinates without the NAD 83 reference may be plotted on maps or charts referenced to NAD 83 only after application of the appropriate corrections that are published on the particular map or chart being used.

[CGD 86–082, 52 FR 33811, Sept. 8, 1987]

§166.105 Definitions.

(a) *Shipping safety fairway* or *fairway* means a lane or corridor in which no artificial island or fixed structure, whether temporary or permanent, will be permitted. Temporary underwater obstacles may be permitted under certain conditions described for specific areas in Subpart B. Aids to navigation approved by the U.S. Coast Guard may be established in a fairway.

(b) *Fairway anchorage* means an anchorage area contiguous to and associated with a fairway, in which fixed structures may be permitted within certain spacing limitations, as described for specific areas in Subpart B.

[CGD 81–80a, 48 FR 30110, June 30, 1983]

§166.110 Modification of areas.

Fairways and fairway anchorages are subject to modification in accordance with 33 U.S.C. 1223(c); 92 Stat. 1473.

[CGD 81–80a, 48 FR 30110, June 30, 1983]

Subpart B—Designations of Fairways and Fairway Anchorages

§ 166.200 Shipping safety fairways and anchorage areas, Gulf of Mexico.

(a) *Purpose.* Fairways and anchorage areas as described in this section are established to control the erection of structures therein to provide safe approaches through oil fields in the Gulf of Mexico to entrances to the major ports along the Gulf Coast.

(b) *Special Conditions for Fairways in the Gulf of Mexico.* Temporary anchors and attendant cables or chains attached to floating or semisubmersible drilling rigs outside a fairway may be placed within a fairway described in this section for the Gulf of Mexico, provide the following conditions are met:

(1) Anchors installed within fairways to stablize semisubmersible drilling rigs shall be allowed to remain 120 days. This period may be extended by the Army Corps of Engineers, as provided by § 209.135(b).

(2) Drilling rigs must be outside of any fairway boundary to whatever distance is necessary to ensure that the minimum depth of water over an anchor line within a fairway is 125 feet.

(3) No anchor buoys or floats or related rigging will be allowed on the surface of the water or to a depth of at least 125 feet from the surface, within a fairway.

(4) Aids to Navigation or danger markings must be installed as required by 33 CFR Subchapter C.

(c) *Special Conditions for Fairway Anchorages in the Gulf of Mexico.* Structures may be placed within an area designated as a fairway anchorage, but the number of structures will be limited by spacing as follows:

(1) The center of a structure to be erected shall not be less than two (2) nautical miles from the center of any existing structure.

(2) In a drilling or production complex, associated structures connected by walkways shall be considered one structure for purposes of spacing, and shall be as close together as practicable having due consideration for the safety factors involved.

(3) A vessel fixed in place by moorings and used in conjunction with the associated structures of a drilling or production complex, shall be considered an attendant vessel and the extent of the complex shall include the vessel and its moorings.

(4) When a drilling or production complex extends more than five hundred (500) yards from the center, a new structure shall not be erected closer than two (2) nautical miles from the outer limit of the complex.

(5) An underwater completion installation in an anchorage area shall be considered a structure and shall be marked with a lighted buoy approved by the United States Coast Guard under § 66.01.

(d) *Designated Areas.*

(1) *Brazos Santiago Pass Safety Fairway.* The areas between rhumb lines joining points at:

Latitude	Longitude
26°03′ 27″	97°08′ 36″
26°02′ 57″	97°07′ 11″
26°02′ 06″	96°57′ 24″
25°58′ 54″	96°19′ 00″

and rhumb lines joining points at:

Latitude	Longitude
26°04′ 27″	97°08′ 36″
26°04′ 58″	97°07′ 07″
26°04′ 12″	96°59′ 30″
26°04′ 00″	96°57′ 24″
26°00′ 54″	96°19′ 00″

(2) *Brazos Santiago Pass Anchorage Areas.* The areas enclosed by rhumb lines joining points at:

Latitude	Longitude
26°02′ 57″	97°07′ 11″
26°02′ 06″	96°57′ 24″
25°58′ 54″	96°57′ 24″
25°58′ 54″	97°07′ 18″
26°02′ 57″	97°07′ 11″

and rhumb lines joining points at:

Latitude	Longitude
26°04′ 58″	97°07′ 07″
26°09′ 00″	97°07′ 00″
26°09′ 00″	96°59′ 30″
26°04′ 12″	96°59′ 30″
26°04′ 58″	97°07′ 07″

(3) *Port Mansfield Safety Fairway.* The area between a rhumb line joining points at:

Latitude	Longitude
26°33′39″	97°16′04″
26°33′43″	97°14′38″

and rhumb lines joining points at:

Latitude	Longitude
26°34′04″	97°16′05″
26°34′40″	97°15′47″
26°34′43″	97°14′40″

(4) *Aransas Pass Safety Fairway*. The area between rhumb lines joining points at:

Latitude	Longitude
27°49′ 21″	97°02′ 08″
27°48′ 11″	97°01′ 06″
27°46′ 26″	96°57′ 40″
27°45′ 14″	96°55′ 26″
27°44′ 09″	96°53′ 25″
27°42′ 47″	96°51′ 39″
27°39′ 24″	96°48′ 26″
27°21′ 59″	96°11′ 42″

and rhumb lines joining points at:

Latitude	Longitude
27°50′ 15″	97°01′ 32″
27°49′ 54″	96°59′ 56″
27°45′ 22″	96°51′ 19″
27°44′ 35″	96°48′ 31″
27°43′ 49″	96°45′ 47″
27°35′ 17″	96°27′ 46″
27°33′ 33″	96°24′ 06″
27°25′ 53″	96°07′ 56″

separated by areas enclosed by rhumb lines joining points at:

Latitude	Longitude
27°41′ 10″	96°47′ 23″
27°34′ 50″	96°34′ 01″
27°34′ 59″	96°31′ 56″
27°42′ 03″	96°46′ 51″
27°41′ 10″	96°47′ 23″

and rhumb lines joining points at:

Latitude	Longitude
27°33′ 06″	96°30′ 21″
27°23′ 33″	96°10′ 12″
27°24′ 19″	96°09′ 26″
27°33′ 15″	96°28′ 16″
27°33′ 06″	96°30′ 21″

(5) *Aransas Pass Anchorage Areas*. The areas enclosed by rhumb lines joining points at:

Latitude	Longitude
27°49′ 54″	96°59′ 56″
27°45′ 22″	96°51′ 19″
27°51′ 46″	96°40′ 12″
27°53′ 36″	96°56′ 30″
27°49′ 54″	96°59′ 56″

and rhumb lines joining points at:

Latitude	Longitude
27°45′ 14″	96°55′ 26″
27°43′ 00″	96°55′ 27″
27°44′ 09″	96°53′ 25″
27°45′ 14″	96°55′ 26″

(6) *Matagorda Entrance Safety Fairway*. The areas between rhumb lines joining points at:

Latitude	Longitude
28°24′50″	96°19′38″
28°22′16″	96°17′40″
28°14′48″	96°09′42″
28°11′24″	96°06′06″
28°10′06″	96°04′42″
27°38′02″	95°49′39″

with rhumb lines joining points at:

Latitude	Longitude
28°25′31″	96°18′48″
28°23′38″	96°16′00″
28°16′12″	96°08′06″
28°12′30″	96°04′12″
28°11′13″	96°02′46″
27°38′12″	95°47′19″

(7) *Matagorda Entrance Anchorage Areas*. The areas enclosed by rhumb lines joining points at:

Latitude	Longitude
28°22′16″	96°17′40″
28°14′48″	96°09′42″
28°12′42″	96°12′12″
28°20′12″	96°20′12″
28°22′16″	96°17′40″

and rhumb lines joining points at:

Latitude	Longitude
28°23′38″	96°16′00″
28°25′36″	96°13′36″
28°18′12″	96°05′36″
28°16′12″	96°08′06″
28°23′38″	96°16′00″

(8) *Freeport Harbor Safety Fairway*. The area between rhumb lines joining points at:

Latitude	Longitude
28°55′ 19″	95°17′ 46″
28°52′ 58″	95°16′ 06″
28°44′ 52″	95°07′ 43″
28°43′ 32″	95°06′ 18″
28°04′ 48″	94°26′ 12″

and rhumb lines joining points at:

Latitude	Longitude
28°55′ 59″	95°16′ 55″
28°54′ 05″	95°14′ 10″
28°45′ 58″	95°05′ 48″
28°44′ 39″	95°04′ 22″
28°07′ 46″	94°26′ 12″

(9) *Freeport Harbor Anchorage Areas*. The areas enclosed by rhumb lines joining points at:

Latitude	Longitude
28°52′ 58″	95°16′ 06″
28°44′ 52″	95°07′ 43″

Latitude	Longitude
28°42′ 24″	95°12′ 00″
28°51′ 30″	95°18′ 42″
28°52′ 58″	95°16′ 06″

and rhumb lines joining points at:

Latitude	Longitude
28°54′ 05″	95°14′ 10″
28°56′ 54″	95°09′ 18″
28°47′ 42″	95°02′ 42″
28°45′ 58″	95°05′ 48″
28°54′ 05″	95°14′ 10″

(10) *Galveston Entrance Safety Fairways.* The areas between rhumb lines joining points at:

Latitude	Longitude
27°44′ 03″	94°26′ 12″
28°04′ 48″	94°26′ 12″
28°07′ 46″	94°26′ 12″
29°06′ 24″	94°26′ 12″
29°07′ 42″	94°27′ 48″
29°18′ 10″	94°39′ 16″
29°19′ 39″	94°41′ 33″
29°20′ 44″	94°40′ 44″
29°19′ 23″	94°37′ 08″
29°10′ 30″	94°22′ 54″
29°10′ 17″	94°22′ 30″
29°09′ 06″	94°20′ 36″
28°17′ 17″	92°57′ 59″

and rhumb lines joining points at:

Latitude	Longitude
27°44′ 13″	94°23′ 57″
29°06′ 24″	94°23′ 55″
29°07′ 41″	94°22′ 23″
28°11′ 57″	92°53′ 25″

(11) *Galveston Entrance Anchorage Areas.* The areas enclosed by rhumb lines joining points at:

Latitude	Longitude
29°18′ 10″	94°39′ 16″
29°08′ 04″	94°28′ 12″
29°03′ 13″	94°36′ 48″
29°14′ 48″	94°45′ 12″
29°18′ 10″	94°39′ 16″

and rhumb lines joining points at:

Latitude	Longitude
29°19′ 23″	94°37′ 08″
29°22′ 18″	94°32′ 00″
29°14′ 23″	94°25′ 53″
29°13′ 24″	94°27′ 33″
29°19′ 23″	94°37′ 08″

(12) *Sabine Pass Safety Fairway.* The areas between rhumb lines joining points at:

Latitude	Longitude
29°38′ 25″	93°50′ 02″
29°35′ 19″	93°49′ 10″
29°33′ 00″	93°46′ 26″
29°32′ 03″	93°46′ 44″
29°30′ 39″	93°43′ 41″
29°28′ 30″	93°41′ 09″
29°07′ 28″	93°41′ 08″
28°17′ 17″	92°57′ 59″
28°11′ 57″	92°53′ 25″
27°51′ 58″	92°36′ 20″

and rhumb lines joining points at:

Latitude	Longitude
29°38′ 48″	93°48′ 59″
29°37′ 32″	93°48′ 02″
29°36′ 28″	93°47′ 14″
29°32′ 52″	93°43′ 00″
29°31′ 13″	93°41′ 04″
29°29′ 20″	93°38′ 51″
29°08′ 08″	93°38′ 52″
28°39′ 02″	93°13′ 39″
28°36′ 15″	93°11′ 15″
27°52′ 09″	92°33′ 40″

(13) *Sabine Pass Anchorage Areas*—(i) *Sabine Pass Inshore Anchorage Area.* The area enclosed by rhumb lines joining points at:

Latitude	Longitude
29°37′32″ N.	93°48′02″ W.
29°37′32″ N.	93°21′25″ W.
29°32′52″ N.	93°43′00″ W.
29°36′28″ N.	93°47′14″ W.

(ii) *Sabine Bank Offshore (North) Anchorage Area.* The area enclosed by rhumb lines joining points at:

Latitude	Longitude
29°26′06″ N.	93°43′00″ W.
29°26′06″ N.	93°41′08″ W.
29°24′06″ N.	93°41′08″ W.
29°24′06″ N.	93°43′00″ W.

(iii) *Sabine Bank Offshore (South) Anchorage Area.* The area enclosed by rhumb lines joining points at:

Latitude	Longitude
29°16′55″ N.	93°43′00″ W.
29°16′55″ N.	93°41′08″ W.
29°14′29″ N.	93°41′08″ W.
29°14′29″ N.	93°43′00″ W.

(14) *Coastwise Safety Fairways.* (i) *Brazos Santiago Pass to Aransas Pass.* The areas between rhumb lines joining points at:

Latitude	Longitude
26°04′ 12″	96°59′ 30″
26°09′ 00″	96°59′ 30″
27°46′ 26″	96°57′ 40″

and rhumb lines joining points at:

Latitude	Longitude
25°58′ 54″	96°57′ 24″

Latitude	Longitude
26°02′ 06″	96°57′ 24″
26°04′ 00″	96°57′ 24″
27°40′ 36″	96°55′ 30″
27°43′ 00″	96°55′ 27″
27°45′ 14″	96°55′ 26″

(ii) *Aransas Pass to Calcasieu Pass.* The areas between rhumb lines joining points at:

Latitude	Longitude
27°43′00″	496°55′27″
27°44′09″	96°53′25″
27°45′22″	96°51′19″
27°51′46″	96°40′12″
28°11′24″	96°06′06″
28°12′30″	96°04′12″
28°42′24″	95°12′00″
28°44′52″	95°07′43″
28°45′58″	95°05′48″
28°47′42″	95°02′42″
29°07′42″	94°27′48″
29°10′17″	94°22′30″
29°29′30″	93°58′24″
29°32′03″	93°46′44″
29°33′00″	93°46′26″
29°32′52″	93°43′00″
29°37′32″	93°21′25″

with rhumb lines joining points at:

Latitude	Longitude
27°40′36″	96°55′30″
27°42′47″	96°51′39″
27°44′35″	96°48′31″
28°10′06″	96°04′42″
28°11′13″	96°02′46″
28°43′32″	95°06′18″
28°44′39″	95°04′22″
29°06′24″	94°26′12″
29°06′24″	94°23′55″
29°07′41″	94°22′23″
29°09′06″	94°20′36″
29°27′40″	93°57′18″
29°30′39″	93°43′41″
29°31′13″	93°41′04″
29°33′56″	93°28′35″
29°32′57″	93°17′00″

(15) *Calcasieu Pass Safety Fairway.* The areas between rhumb lines joining points at:

Latitude	Longitude
29°45′ 00″	93°20′ 58″
29°40′ 56″	93°20′ 18″
29°38′ 18″	93°20′ 42″
29°37′ 32″	93°21′ 25″
29°32′ 57″	93°17′ 00″
29°31′ 08″	93°14′ 38″
28°39′ 02″	93°13′ 39″

and rhumb lines joining points at:

Latitude	Longitude
29°45′ 05″	93°20′ 03″
29°41′ 12″	93°19′ 37″
29°37′ 30″	93°18′ 15″
29°31′ 16″	93°12′ 16″
28°36′ 15″	93°11′ 15″

(16) *Calcasieu Pass Anchorage Areas*—(i) *Calcasieu Pass North Anchorage Area.* The area enclosed by rhumb lines joining points at:

Latitude	Longitude
29°41′12″ N.	93°19′37″ W.
29°41′12″ N.	93°12′28″ W.
29°31′16″ N.	93°12′16″ W.
29°37′30″ N.	93°18′15″ W.

(ii) *Calcasieu Pass South Anchorage Area.* The area enclosed by rhumb lines joining points at:

Latitude	Longitude
28°59′30″ N.	93°16′30″ W.
28°59′30″ N.	93°14′00″ W.
28°56′00″ N.	93°14′00″ W.
28°56′00″ N.	93°16′30″ W.

(17) *Lower Mud Lake Safety Fairway.* The area enclosed by rhumb lines joining points at:

Latitude	Longitude
29°43′24″ N.	93°00′18″ W.
29°42′00″ N.	93°00′18″ W.

and rhumb lines joining points at:

Latitude	Longitude
29°43′33″N.	93°00′48″ W.
29°42′00″N.	93°00′48″ W.

(18) *Freshwater Bayou Safety Fairway.* The area between lines joining points at:

Latitude	Longitude
29°31′ 59″	92°18′ 45″
29°31′ 10″	92°18′ 54″
29°31′ 13″	92°19′ 14″
29°27′ 44″	92°19′ 53″

and a line joining points at:

Latitude	Longitude
29°27′ 34″	92°18′ 45″
29°31′ 03″	92°18′ 06″
29°31′ 06″	92°18′ 26″
29°31′ 55″	92°18′ 17″

(19) *Southwest Pass Safety Fairway.* The area between lines joining points at:

Latitude	Longitude
29°34′ 48″	92°03′ 12″
29°30′ 48″	92°07′ 00″
29°23′ 30″	92°08′ 24″

and lines joining points at:

Latitude	Longitude
29°34′ 24″	92°02′ 24″
29°30′ 24″	92°06′ 12″

Latitude	Longitude
29°23′ 24″	92°07′ 30″

(20) *Atchafalaya Pass Safety Fairway.* The area between a line joining points at:

Latitude	Longitude
29°22′ 36″	91°23′ 28″
29°14′ 42″	91°30′ 28″

and a line joining points at:

Latitude	Longitude
29°14′ 05″	91°29′ 34″
29°21′ 59″	91°22′ 34″

(21) *Bayou Grand Caillou Safety Fairway.* The area between a line joining points at:

Latitude	Longitude
29°10′ 59″	90°57′ 26″
29°05′ 24″	90°58′ 10″
29°01′ 08″	91°00′ 44″

and a line joining points at:

Latitude	Longitude
29°00′ 40″	90°59′ 43″
29°05′ 06″	90°57′ 03″
29°09′ 46″	90°56′ 27″

(22) *Cat Island Pass Safety Fairway.* The area between lines joining points at:

Latitude	Longitude
29°05′ 57″	90°34′ 32″
29°04′ 56″	90°35′ 09″
29°03′ 14″	90°35′ 10″
29°03′ 14″	90°35′ 17″
29°01′ 24″	90°34′ 55″

and lines joining points at:

Latitude	Longitude
29°06′ 00″	90°34′ 21″
29°05′ 31″	90°34′ 12″
29°03′ 13″	90°34′ 13″
29°03′ 13″	90°34′ 07″
29°01′ 34″	90°33′ 47″

(23) *Belle Pass Safety Fairway.* The area between a line joining points at:

Latitude	Longitude
29°05′ 06″	90°14′ 07″
29°02′ 50″	90°14′ 46″

and a line joining points at:

Latitude	Longitude
29°02′ 56″	90°13′ 48″
29°05′ 06″	90°13′ 10″

(24) *Barataria Pass Safety Fairway.* The area between a line joining points at:

Latitude	Longitude
29°16′ 00″	89°57′ 00″
29°14′ 54″	89°55′ 48″

and a line joining points at:

Latitude	Longitude
29°16′ 30″	89°56′ 06″
29°15′ 18″	89°55′ 00″

(25) *Grand Bayou Pass Safety Fairway.* The areas between a line joining points at:

Latitude	Longitude
29°17′ 36″	89°41′ 36″
29°16′ 48″	89°42′ 12″

and a line joining points at:

Latitude	Longitude
29°17′ 18″	89°40′ 36″
29°16′ 18″	89°41′ 18″

(26) *Empire to the Gulf Safety Fairway.* The area between a line joining points at:

Latitude	Longitude
29°15′ 22″	89°36′ 55″
29°13′ 52″	89°37′ 15″

and a line joining points at:

Latitude	Longitude
29°13′ 24″	89°36′ 11″
29°14′ 54″	89°35′ 51″

(27) *Gulf Safety Fairway. Aransas Pass Safety Fairway to Southwest Pass Safety Fairway.* The areas between rhumb lines joining points at:

Latitude	Longitude
27°33′ 06″	96°30′ 21″
27°33′ 15″	96°28′ 16″
27°33′ 33″	96°24′ 06″
28°00′ 36″	90°08′ 18″

and rhumb lines joining points at:

Latitude	Longitude
27°34′ 50″	96°34′ 01″
27°34′ 59″	96°31′ 56″
27°35′ 17″	96°27′ 46″
27°38′ 02″	95°49′ 39″
27°38′ 12″	95°47′ 19″
27°44′ 03″	94°26′ 12″
27°44′ 13″	94°23′ 57″
27°51′ 58″	92°36′ 20″
27°52′ 09″	92°33′ 40″
28°02′ 32″	90°09′ 28″

(28) *Southwest Pass (Mississippi River) Safety Fairway*—(i) *Southwest Pass (Mississippi River) to Gulf Safety Fairway*. The area enclosed by rhumb lines joining points at:

Latitude	Longitude
28°54′33″ N.	89°26′07″ W.
28°52′42″ N.	89°27′06″ W.
28°50′00″ N.	89°27′06″ W.
28°02′32″ N.	90°09′28″ W.

and rhumb lines joining points at:

28°54′18″ N.	89°25′46″ W.
28°53′30″ N.	89°25′18″ W.
28°53′30″ N.	89°23′48″ W.
28°50′40″ N.	89°24′48″ W.
28°48′48″ N.	89°24′48″ W.
28°47′24″ N.	89°26′30″ W.
28°00′36″ N.	90°08′18″ W.

(ii) *Southwest Pass (Mississippi River) to Sea Safety Fairway*. The area enclosed by rhumb lines joining points at:

Latitude	Longitude
28°54′33″ N.	89°26′07″ W.
28°52′42″ N.	89°27′06″ W.
28°50′00″ N.	89°27′06″ W.
28°47′24″ N.	89°26′30″ W.
28°36′28″ N.	89°18′45″ W.

and rhumb lines joining points at:

28°54′18″ N.	89°25′46″ W.
28°53′30″ N.	89°25′18″ W.
28°53′30″ N.	89°23′48″ W.
28°50′40″ N.	89°24′48″ W.
28°48′48″ N.	89°24′48″ W.
28°45′06″ N.	89°22′12″ W.
28°43′27″ N.	89°21′01″ W.
28°37′54″ N.	89°17′06″ W.

(iii) *Southwest Pass (Mississippi River) to South Pass (Mississippi River) Safety Fairway*. The areas between rhumb line joining points at:

Latitude	Longitude
28°45′ 06″	89°22′ 12″
28°55′ 56″	89°03′ 09″

and rhumb lines joining points at:

Latitude	Longitude
28°43′ 27″	89°21′ 01″
28°54′ 55″	89°00′ 44″

(29) *Southwest Pass (Mississippi River) Anchorage*. The area enclosed by rhumb lines joining points at:

Latitude	Longitude
28°53′30″ N.	89°23′48″ W.
28°53′30″ N.	89°21′48″ W.
28°55′06″ N.	89°21′48″ W.
28°55′06″ N.	89°19′18″ W.
28°52′41″ N.	89°17′30″ W.
28°50′40″ N.	89°21′14″ W.
28°50′40″ N.	89°24′48″ W.

(30) *South Pass (Mississippi River) Safety Fairway*. (i) *South Pass to Sea Safety Fairway*. The areas between rhumb lines joining points at:

Latitude	Longitude
28°59′ 18″	89°08′ 30″
28°58′ 42″	89°07′ 30″
28°58′ 09″	89°08′ 30″
28°55′ 56″	89°03′ 09″
28°54′ 55″	89°00′ 44″
28°54′ 15″	88°59′ 00″

and rhumb lines joining points at:

East jetty light	
28°59′ 24″	89°08′ 12″
29°00′ 09″	89°07′ 24″
29°00′ 00″	89°07′ 00″
28°57′ 56″	89°02′ 18″
28°57′ 18″	89°00′ 48″
28°56′ 16″	88°58′ 29″
28°55′ 42″	88°57′ 06″

(ii) *South Pass (Mississippi River) to Mississippi River-Gulf Outlet Channel Safety Fairway*. The areas between rhumb lines joining points at:

Latitude	Longitude
28°57′ 18″	89°00′ 48″
29°04′ 18″	88°48′ 31″
29°24′ 35″	88°57′ 17″

and rhumb lines joining points at:

Latitude	Longitude
28°56′ 16″	88°58′ 29″
29°03′ 30″	88°45′ 42″
29°23′ 06″	88°54′ 11″
29°26′ 28″	88°55′ 39″

(31) *South Pass (Mississippi River) Anchorage*. The areas within rhumb lines joining points at:

Latitude	Longitude
29°00′ 00″	89°07′ 00″
29°03′ 36″	89°02′ 18″
28°57′ 56″	89°02′ 18″

(32) *Mississippi River-Gulf Outlet Safety Fairway*. (i) The areas between rhumb lines joining points at:

Latitude	Longitude
29°42′ 10″	89°25′ 49″
29°29′ 33″	89°07′ 47″
29°27′ 14″	89°03′ 20″
29°24′ 38″	89°00′ 00″
29°24′ 35″	88°57′ 17″

and rhumb lines joining points at:

Latitude	Longitude
29°42′ 29″	89°25′ 31″
29°29′ 53″	89°07′ 31″
29°27′ 01″	89°01′ 54″
29°26′ 38″	88°58′ 43″

(ii) *Mississippi River-Gulf Outlet Channel to Mobile Ship Channel Safety Fairway.* The areas within rhumb lines joining points at:

Latitude	Longitude
29°26′ 38″	88°58′ 43″
29°29′ 57″	88°54′ 48″
29°38′ 59″	88°44′ 04″
29°56′ 43″	88°20′ 50″
29°58′ 03″	88°19′ 05″
30°05′ 29″	88°09′ 19″

and rhumb lines joining points at:

Latitude	Longitude
29°26′ 28″	88°55′ 39″
29°27′ 54″	88°53′ 54″
29°37′ 32″	88°42′ 28″
29°55′ 14″	88°19′ 15″
29°56′ 34″	88°17′ 30″
30°03′ 50″	88°08′ 01″
30°05′ 15″	88°06′ 05″

(33) *Mississippi River-Gulf Outlet Anchorage.* (i) The areas within rhumb lines joining points at:

Latitude	Longitude
29°27′ 01″	89°01′ 54″
29°32′ 12″	88°55′ 42″
29°29′ 57″	88°54′ 48″
29°26′ 38″	88°58′ 43″

(ii) The areas within rhumb lines joining points at:

Latitude	Longitude
29°26′ 28″	88°55′ 39″
29°27′ 54″	88°53′ 54″
29°24′ 33″	88°52′ 27″
29°23′ 06″	88°54′ 11″

(34) *Gulfport Safety Fairway.* The areas between rhumb lines joining points at:

Latitude	Longitude
30°20′ 54″	89°05′ 36″
30°13′ 56″	88°59′ 42″
30°11′ 09″	88°59′ 56″
30°06′ 45″	88°56′ 24″
30°05′ 42″	88°56′ 24″

and rhumb lines joining points at:

Latitude	Longitude
30°21′ 27″	89°04′ 38″
30°14′ 11″	88°58′ 29″
30°11′ 29″	88°58′ 45″
30°07′ 42″	88°55′ 37″

(35) *Biloxi Safety Fairway.* The area between lines joining points at:

Latitude	Longitude
30°24′ 06″	88°50′ 57″
30°23′ 15″	88°50′ 22″
30°21′ 11″	88°47′ 36″
30°20′ 13″	88°47′ 04″
30°15′ 06″	88°47′ 06″
30°13′ 09″	88°47′ 46″
30°12′ 23″	88°49′ 02″

and lines joining points at:

Latitude	Longitude
30°24′ 27″	88°50′ 31″
30°23′ 57″	88°49′ 31″
30°21′ 42″	88°46′ 36″
30°20′ 25″	88°45′ 55″
30°14′ 57″	88°45′ 57″
30°12′ 56″	88°46′ 39″
30°12′ 00″	88°45′ 25″

(36) *Ship Island Pass to Horn Island Pass Safety Fairway.* The areas between rhumb line joining points at:

Latitude	Longitude
30°05′ 42″	88°56′ 24″
30°06′ 38″	88°31′ 26″

and rhumb line joining points at:

Latitude	Longitude
30°07′ 42″	88°55′ 37″
30°08′ 27″	88°36′ 57″

(37) *Pascagoula Safety Fairway.* The areas between rhumb lines joining points at:

Latitude	Longitude
30°20′ 46″	88°34′ 39″
30°20′ 21″	88°34′ 39″
30°17′ 00″	88°31′ 21″
30°12′ 59″	88°30′ 53″
30°11′ 50″	88°32′ 05″
30°08′ 27″	88°36′ 57″
30°06′ 38″	88°31′ 26″
29°56′ 43″	88°20′ 50″
29°55′ 14″	88°19′ 15″
29°20′ 00″	87°41′ 47″

and rhumb line joining points at:

Latitude	Longitude
30°20′ 30″	88°33′ 18″
30°18′ 39″	88°31′ 25″

and rhumb line joining points at:

Latitude	Longitude
30°20′ 26″	88°31′ 25″
30°18′ 39″	88°31′ 25″

and rhumb lines joining points at:

Latitude	Longitude
30°19′ 21″	88°30′ 12″
30°17′ 25″	88°30′ 12″
30°12′ 46″	88°29′ 42″
30°11′ 21″	88°31′ 00″
30°09′ 33″	88°29′ 48″
30°07′ 30″	88°29′ 09″
29°58′ 03″	88°19′ 05″
29°56′ 34″	88°17′ 30″
29°20′ 48″	87°39′ 31″

(38) *Horn Island Pass to Mobile Ship Channel Safety Fairway.* The areas between rhumb line joining points at:

Latitude	Longitude
30°09′ 33″	88°29′ 48″
30°07′ 15″	88°06′ 54″

and rhumb line joining points at:

Latitude	Longitude
30°07′ 30″	88°29′ 09″
30°05′ 29″	88°09′ 19″

(39) *Mobile Safety Fairway*—(i) *Moble Ship Channel Safety Fairway.* The areas between rhumb lines joining points at:

Latitude	Longitude
30°38′46″ N	88°03′24″ W
30°38′14″ N	88°02′42″ W
30°31′59″ N	88°02′00″ W
30°31′59″ N	88°04′59″ W

and rhumb lines joining points at:

Latitude	Longitude
30°31′00″ N	88°05′30″ W
30°31′00″ N	88°01′54″ W
30°26′55″ N	88°01′26″ W
30°16′35″ N	88°02′45″ W
30°14′09″ N	88°03′24″ W
30°10′36″ N	88°03′53″ W
30°08′10″ N	88°04′40″ W
30°07′15″ N	88°06′54″ W

and rhumb lines joining points at:

Latitude	Longitude
30°39′55″ N	88°01′15″ W
30°37′06″ N	88°01′23″ W
30°26′11″ N	88°00′11″ W
30°16′18″ N	88°01′35″ W
30°13′52″ N	88°01′12″ W
30°13′14″ N	88°01′12″ W
30°10′36″ N	88°01′35″ W
30°08′04″ N	88°00′36″ W

(ii) *Mobile Ship Channel to Sea Safety Fairway.* The areas between rhumb lines joining points at:

Latitude	Longitude
30°05′ 15″	88°01′ 13″
30°03′ 50″	88°00′ 00″
29°25′ 46″	87°29′ 13″

and rhumb line joining points at:

Latitude	Longitude
30°06′ 17″	87°59′ 15″
29°27′ 00″	87°27′ 18″

(iii) *Mobile to Pensacola Safety Fairway.* The areas between rhumb line joining points at:

Latitude	Longitude
30°08′ 04″	88°00′ 36″
30°14′ 20″	87°19′ 05″

and rhumb line joining points at:

Latitude	Longitude
30°06′ 17″	87°59′ 15″
30°12′ 31″	87°18′ 00″

(40) *Mobile Anchorage.* The areas within rhumb lines joining points at:

Latitude	Longitude
30°05′ 15″	88°06′ 05″
30°05′ 15″	88°01′ 13″
30°03′ 50″	88°00′ 00″
30°03′ 50″	88°08′ 01″

(41) *Pensacola Safety Fairway.* The areas between rhumb lines joining points at:

Latitude	Longitude
30°23′ 41″	87°14′ 34″
30°23′ 06″	87°13′ 53″
30°22′ 54″	87°13′ 53″
30°20′ 47″	87°15′ 45″

and rhumb lines joining points at:

Latitude	Longitude
30°18′ 43″	87°19′ 24″
30°15′ 57″	87°18′ 19″
30°14′ 20″	87°19′ 05″
30°12′ 31″	87°18′ 00″
30°10′ 03″	87°18′ 00″
29°37′ 00″	87°18′ 00″

and rhumb lines joining points at:

Latitude	Longitude
30°26′ 27″	87°08′ 28″
30°25′ 35″	87°10′ 30″

and rhumb lines joining points at:

Latitude	Longitude
30°24′ 36″	87°07′ 07″
30°22′ 57″	87°09′ 38″
30°22′ 36″	87°11′ 50″
30°19′ 21″	87°14′ 46″
30°19′ 52″	87°17′ 31″

and rhumb lines joining points at:

Latitude	Longitude
30°19′ 15″	87°17′ 37″
30°16′ 28″	87°16′ 32″
30°14′ 32″	87°16′ 06″
30°12′ 33″	87°15′ 43″
29°42′ 30″	87°15′ 43″

(42) *Pensacola Anchorage.* (i) The area within rhumb lines joining points at:

Latitude	Longitude
30°11′ 49″	87°22′ 41″
30°12′ 31″	87°18′ 00″
30°10′ 03″	87°18′ 00″
30°09′ 21″	87°22′ 41″

(ii) The area within rhumb lines joining points at:

Latitude	Longitude
30°16′ 28″	87°16′ 32″
30°17′ 14″	87°11′ 52″
30°15′ 14″	87°11′ 52″
30°14′ 32″	87°16′ 06″

(43) *Pensacola to Panama City Safety Fairway.* The area between rhumb lines joining points at:

Latitude	Longitude
30°14′ 32″	87°16′ 06″
30°15′ 14″	87°11′ 52″
30°18′ 45″	86°50′ 00″
30°18′ 00″	86°20′ 00″
29°51′ 30″	85°47′ 33″

and rhumb lines joining points at:

Latitude	Longitude
30°12′ 33″	87°15′ 43″
30°16′ 44″	86°49′ 49″
30°16′ 01″	86°20′ 57″
29°48′ 45″	85°47′ 33″

(44) *Panama City Safety Fairways.* The areas between rhumb lines joining points at:

Latitude	Longitude
30°09′24″	85°40′12″
30°09′21″	85°41′40″
30°07′36″	85°44′20″
30°06′32″	85°47′33″
29°51′30″	85°47′33″
29°48′45″	85°47′33″
29°03′30″	85°47′33″

and rhumb lines joining points at:

Latitude	Longitude
30°08′34″	85°40′16″
30°07′55″	85°41′50″
30°06′49″	85°43′28″
30°04′40″	85°45′15″
29°55′27″	85°45′15″
29°51′20″	85°45′15″
29°49′19″	85°45′15″
29°00′00″	85°45′15″

(45) *Panama City Anchorage.* The area within rhumb lines joining points at:

Latitude	Longitude
29°55′ 27″	85°45′ 15″
29°55′ 27″	85°42′ 25″
29°51′ 39″	85°42′ 25″
29°51′ 20″	85°45′ 15″

(46) *Port St. Joe Fairway to Panama City Fairway.* The area between rhumb lines joining points at:

Latitude	Longitude
29°49′ 54″	85°19′ 24″
29°50′ 59″	85°22′ 25″
29°53′ 32″	85°22′ 25″
29°54′ 12″	85°24′ 00″
29°54′ 12″	85°25′ 55″
29°52′ 58″	85°28′ 43″
29°53′ 00″	85°29′ 48″
29°51′ 39″	85°42′ 25″
29°51′ 20″	85°45′ 15″

and rhumb lines joining points at:

Latitude	Longitude
29°48′ 22″	85°18′ 12″
29°47′ 21″	85°21′ 00″
29°50′ 42″	85°23′ 31″
29°52′ 51″	85°23′ 36″
29°53′ 10″	85°24′ 18″
29°53′ 10″	85°25′ 33″
29°51′ 57″	85°28′ 19″
29°51′ 04″	85°29′ 00″
29°50′ 40″	85°32′ 39″
29°49′ 19″	85°45′ 15″

(47) *Port St. Joe Anchorage.* The area within rhumb lines joining points at:

Latitude	Longitude
29°50′ 40″	85°32′ 39″
29°51′ 04″	85°29′ 00″
29°49′ 18″	85°30′ 18″

(48) *Tampa Safety Fairways.* The area between rhumb lines joining points at:

Latitude	Longitude
27°37′ 48″	82°45′ 54″
27°36′ 48″	82°55′ 54″
27°36′ 48″	83°00′ 00″
27°36′ 48″	84°39′ 10″

and rhumb lines joining points at:

Latitude	Longitude
27°35′ 54″	82°45′ 42″
27°34′ 48″	82°55′ 54″
27°34′ 48″	83°00′ 00″
27°34′ 48″	84°39′ 00″

(49) Tampa Anchorages—(i) Eastern Tampa Fairway Anchorage. The area enclosed by rhumb lines [North American Datum of 1927 (NAD–27)] joining points at:

Latitude	Longitude
27°36′48″N.,	83°00′00″W.,
27°39′00″N.,	83°00′00″W.,
27°39′00″N.,	82°55′54″W.,
27°36′48″N.,	82°55′54″W.

(ii) Western Tampa Fairway Anchorage. The area enclosed by rhumb lines [North American Datum of 1927 (NAD–27)] joining points at:

Latitude	Longitude
27°36′48″N.,	83°05′06″W.,
27°39′00″N.,	83°05′06″W.,
27°39′00″N.,	83°01′00″W.,
27°36′48″N.,	83°01′00″W.

(50) *Charlotte Safety Fairways.* The area between rhumb lines joining points at:

Latitude	Longitude
26°41′ 18″	82°19′ 00″
25°30′ 00″	84°22′ 00″

and rhumb lines joining points at:

Latitude	Longitude
26°40′ 19″	82°18′ 28″
26°38′ 30″	82°19′ 54″
26°39′ 00″	82°19′ 00″
25°28′ 00″	84°21′ 30″

(51) *Charlotte Anchorage.* The area within rhumb lines joining points at:

Latitude	Longitude
26°39′ 00″	82°19′ 00″
26°38′ 12″	82°18′ 24″
26°37′ 36″	82°19′ 18″
26°38′ 30″	82°19′ 54″

(52) *Louisiana Offshore Oil Port (LOOP) Shipping Safety Fairway to Safety Zone.* (i) North of Gulf Safety Fairway. The two mile wide area enclosed by rhumb lines joining points at:

Latitude	Longitude
28°48′ 36″	89°55′ 00″
28°48′ 14″	89°54′ 17″
28°45′ 47″	89°54′ 19″
28°36′ 06″	89°55′ 44″
28°18′ 30″	89°55′ 15″
28°20′ 58″	89°53′ 03″
28°36′ 09″	89°53′ 28″
28°49′ 07″	89°51′ 30″
28°50′ 20″	89°53′ 51″

(ii) South of Gulf Safety Fairway. The two mile wide area enclosed by rhumb lines joining points at:

Latitude	Longitude
28°15′ 20″	89°55′ 10″
27°46′ 29″	89°54′ 23″
27°46′ 32″	89°52′ 08″
28°17′ 48″	89°52′ 58″

(53) *Heald Bank Cutoff Safety Fairway.* The area enclosed by rhumb lines, [North American Datum of 1927 (NAD–27)], joining points at:

Latitude	Longitude
28°57′15″ N	94°23′55″ W
28°51′30″ N	93°56′30″ W
28°48′30″ N	93°51′45″ W
28°55′15″ N	94°23′55″ W

[CGD 81–040, 47 FR 20581, May 13, 1982]

EDITORIAL NOTE: For FEDERAL REGISTER citations affecting § 166.200, see the List of CFR Sections Affected in the Finding Aids section of this volume.

§ 166.300 Areas along the coast of California.

(a) *Purpose.* Fairways as described in this section are established to control the erection of structures therein to provide safe vessel routes along the coast of California.

(b) *Designated Areas*—(1) *Port Hueneme Safety Fairway.* An area one nautical mile in width centered on the alinement of Port Hueneme Entrance Channel and extending seaward from the 30-foot-depth curve for a distance of 1.5 nautical miles, thence turning southerly and widening to 1.5 nautical miles at the 3-mile limit, all between lines joining the following points:

Latitude	Longitude
34°06′30″ N	119°15′00″ W
34°07′37″ N	119°14′25″ W
34°08′49″ N	119°13′21″ W

thence generally along the 30-foot-depth curve to the seaward end of the west entrance jetty; seaward end of the east entrance jetty, thence generally along the 30-foot-depth curve to:

Latitude	Longitude
34°08′21″ N	119°12′15″ W
34°07′10″ N	119°13′20″ W
34°05′48″ N	119°13′23″ W

(2) [Reserved]

[CGD 82–101, 48 FR 49019, Oct. 24, 1983]

§ 166.400 Areas along the coast of Alaska.

(a) *Purpose.* Fairways, as described in this section, are established to control the erection of structures therein to provide safe vessel routes along the coast of Alaska.

(b) *Designated Areas.*

(1) *Prince William Sound Safety Fairway. (i) Hinchinbrook Entrance Safety Fairway.* The area enclosed by rhumb lines joining points at:

Latitude	Longitude
59°59′00″ N	145°27′24″ W
60°13′18″ N	146°38′06″ W
60°11′24″ N	146°47′00″ W
59°55′00″ N	145°42′00″ W

(ii) *Gulf to Hinchinbrook Safety Fairway* (recommended for inbound vessel traffic). The area enclosed by rhumb lines joining points at:

Latitude	Longitude
59°15′42″ N	144°02′07″ W
59°59′00″ N	145°27′24″ W
59°58′00″ N	145°32′12″ W
59°14′18″ N	144°04′53″ W

(iii) *Hinchinbrook to Gulf Safety Fairway* (recommended for outbound vessel traffic). The area enclosed by rhumb lines joining points at:

Latitude	Longitude
59°15′41″ N	144°23′35″ W
59°56′00″ N	145°37′39″ W
59°55′00″ N	145°42′00″ W
59°14′19″ N	144°26′25″ W

(2) *Unimak Pass Safety Fairway. (i) East/West Safety Fairway.* The area enclosed by rhumb lines joining points at:

Latitude	Longitude
54°25′58″ N	165°42′24″ W
54°22′50″ N	165°06′54″ W
54°22′10″ N	164°59′29″ W
54°07′58″ N	162°19′25″ W
54°04′02″ N	162°20′35″ W
54°22′02″ N	165°43′36″ W

(ii) *North/South Safety Fairway.* The area enclosed by rhumb lines joining points at:

Latitude	Longitude
54°42′28″ N	165°16′19″ W
54°43′32″ N	165°09′41″ W
54°22′50″ N	165°06′54″ W
54°22′10″ N	164°59′29″ W

[CGD 81–103, 51 FR 43349, Dec. 2, 1986]

§ 166.500 Areas along the Atlantic Coast.

(a) *Purpose.* Fairways, as described in this section are established to control the erection of structures therein to provide safe vessel routes along the Atlantic Coast.

(b) *Designated Areas.*

(1) *Off New York Shipping Safety Fairway.* (i) Ambrose to Nantucket Safety Fairway. The area enclosed by rhumb lines, [North American Datum of 1927 (NAD–27)] joining points at:

Latitude	Longitude
40°32′20″ N	73°04′57″ W
40°30′58″ N	72°58′25″ W
40°34′07″ N	70°19′23″ W
40°35′37″ N	70°14′09″ W
40°30′37″ N	70°14′00″ W
40°32′07″ N	70°19′19″ W
40°28′58″ N	72°58′25″ W
40°27′20″ N	73°04′57″ W

(ii) *Nantucket to Ambrose Safety Fairway.* The area enclosed by rhumb lines, NAD–27, joining point at:

Latitude	Longitude
28°54′33″ N	89°26′07″ W
40°24′20″ N	73°04′58″ W
40°22′58″ N	72°58′26″ W
40°26′07″ N	70°19′09″ W
40°27′37″ N	70°13′46″ W
40°22′37″ N	70°13′36″ W
40°24′07″ N	70°19′05″ W
40°20′58″ N	72°58′26″ W
40°19′20″ N	73°04′58″ W

[CGD 84–004, 52 FR 33589, Sept. 4, 1987; 52 FR 36248, Sept. 28, 1987]

PART 167—OFFSHORE TRAFFIC SEPARATION SCHEMES

Subpart A—General

Sec.
167.1 Purpose.
167.3 Geographic coordinates.
167.5 Definitions.
167.10 Operating rules.
167.15 Modification of schemes.

Subpart B—Description of Traffic Separation Schemes and Precautionary Areas

ATLANTIC EAST COAST

167.150 Off New York Traffic Separation Scheme: General.
167.151 Off New York: Precautionary areas.
167.152 Off New York: Eastern approach, off Nantucket.

167.153 Off New York: Eastern approach, off Ambrose Light.
167.154 Off New York: South-eastern approach.
167.155 Off New York: Southern approach.
167.200 In the approaches to Chesapeake Bay Traffic Separation Scheme: General.
167.201 In the approaches to Chesapeake Bay: Precautionary area.
167.202 In the approaches to Chesapeake Bay: Eastern approach.
167.203 In the approaches to Chesapeake Bay: Southern approach.

ATLANTIC GULF COAST

167.350 In the approaches to Galveston Bay Traffic Separation Scheme and precautionary areas.

AUTHORITY: 33 U.S.C. 1223; 49 CFR 1.46.

SOURCE: CGD 81–080, 48 FR 36456, Aug. 11, 1983, unless otherwise noted.

Subpart A—General

§167.1 Purpose.

The purpose of the regulations in this part is to establish and designate traffic separation schemes and precautionary areas to provide access routes for vessels proceeding to and from U.S. ports.

§167.3 Geographic coordinates.

Geographic coordinates are defined using North American 1927 Datum (NAD 27) unless indicated otherwise.

[CGD 90–039, 59 FR 21937, Apr. 28, 1994]

§167.5 Definitions.

(a) *Traffic separation scheme* (TSS) means a designated routing measure which is aimed at the separation of opposing streams of traffic by appropriate means and by the establishment of traffic lanes.

(b) *Traffic lane* means an area within defined limits in which one-way traffic is established. Natural obstacles, including those forming separation zones, may constitute a boundary.

(c) *Separation zone or line* means a zone or line separating the traffic lanes in which ships are proceeding in opposite or nearly opposite directions; or separating a traffic lane from the adjacent sea area; or separating traffic lanes designated for particular classes of ships proceeding in the same direction.

(d) *Precautionary area* means a routing measure comprising an area within defined limits where ships must navigate with particular caution and within which the direction of traffic flow may be recommended.

(e) *Deep-water route* means an internationally recognized routing measure primarily intended for use by ships that, because of their draft in relation to the available depth of water in the area concerned, require the use of such a route.

[CGD 81–080, 48 FR 36456, Aug. 11, 1983; 49 FR 15548, Apr. 19, 1984, as amended by CGD 90–039, 59 FR 21937, Apr. 28, 1994]

§167.10 Operating rules.

The operator of a vessel in a TSS shall comply with Rule 10 of the International Regulations for Preventing Collisions at Sea, 1972, as amended.

§167.15 Modification of schemes.

(a) A traffic separation scheme or precautionary area described in this Part may be permanently amended in accordance with 33 U.S.C. 1223 (92 Stat. 1473), and with international agreements.

(b) A traffic separation scheme or precautionary area in this Part may be temporarily adjusted by the Commandant of the Coast Guard in an emergency, or to accommodate operations which would create an undue hazard for vessels using the scheme or which would contravene Rule 10 of the International Regulations for Preventing Collisions at Sea, 1972. Adjustment may be in the form of a temporary traffic lane shift, a temporary suspension of a section of the scheme, a temporary precautionary area overlaying a lane, or other appropriate measure. Adjustments will only be made where, in the judgment of the Coast Guard, there is no reasonable alternative means of conducting an operation and navigation safety will not be jeopardized by the adjustment. Notice of adjustments will be made in the appropriate Notice to Mariners and in the FEDERAL REGISTER. Requests by members of the public for temporary adjustments to traffic separation schemes must be submitted 150 days prior to the time the adjustment is desired. Such Requests, describing the interference

that would otherwise occur to a TSS, should be submitted to the District Commander of the Coast Guard District in which the TSS is located.

Subpart B—Description of Traffic Separation Schemes and Precautionary Areas

ATLANTIC EAST COAST

SOURCE: CGD 84–004, 52 FR 33589, Sept. 4, 1987, unless otherwise noted.

§ 167.150 Off New York Traffic Separation Scheme: General.

The specific areas in the Off New York Traffic Separation Scheme and Precautionary Areas are described in §§ 167.151, 167.152, 167.153, 167.154, and 167.155 of this chapter.

[CGD 84–004, 52 FR 33589, Sept. 4, 1987]

§ 167.151 Off New York: Precautionary areas.

(a) A circular precautionary area with a radius of seven miles is established centered upon Ambrose Light in geographical position 40°27.50′N,73°49.90′ W.

(b) A precautionary area is established between the traffic separation scheme ''Eastern Approach, off Nantucket'' and the traffic separation scheme ''In the Approach to Boston, Massachusetts.'' (1) The precautionary area is bounded to the east by a circle of radius 15.5 miles, centered upon geographical position 40°35.00′N,69°00.00′ W, and is intersected by the traffic separation schemes ''In the Approach to Boston, Massachusetts'' and ''Off New York'' at the following geographic positions:

Latitude	Longitude
40°50.33′ N	68°57.00′ W
40°23.75′ N	69°14.63′ W

(2) The precautionary area is bounded to the west by a line connecting the two traffic separation schemes between the following geographical positions:

Latitude	Longitude
40°36.75′ N	68°15.16′ W
40°48.00′ N	69°03.33′ W

[CGD 84–004, 52 FR 33589, Sept. 4, 1987]

§ 167.152 Off New York: Eastern approach, off Nantucket.

(a) A separation zone is established bounded by a line connecting the following geographical positions:

Latitude	Longitude
40°28.75′ N	69°14.83′ W
40°27.62′ N	70°13.77′ W
40°30.62′ N	70°14.00′ W
40°31.75′ N	69°14.97′ W

(b) A traffic lane for westbound traffic is established between the separation zone and a line connecting the following geographical positions:

Latitude	Longitude
40°36.75′ N	69°15.17′ W
40°35.62′ N	70°14.15′ W

(c) A traffic lane for eastbound traffic is established between the separation zone and a line connecting the following geographical positions:

Latitude	Longitude
40°22.62′ N	70°13.60′ W
40°23.75′ N	69°14.63′ W

[CGD 84–004, 52 FR 33589, Sept. 4, 1987]

§ 167.153 Off New York: Eastern approach, off Ambrose Light.

(a) A separation zone is established bounded by a line connecting the following geographical positions:

Latitude	Longitude
40°24.33′ N	73°04.97′ W
40°24.20′ N	73°11.50′ W
40°26.00′ N	73°40.93′ W
40°27.00′ N	73°40.75′ W
40°27.20′ N	73°11.50′ W
40°27.33′ N	73°04.95′ W

(b) A traffic lane for westbound traffic is established between the separation zone and a line connecting the following geographical positions:

Latitude	Longitude
40°32.33′ N	73°04.95′ W
40°32.20′ N	73°11.50′ W
40°28.00′ N	73°40.73′ W

(c) A traffic lane for eastbound traffic is established between the separation zone and a line connecting the following geographical positions:

Latitude	Longitude
40°25.05′ N	73°41.32′ W
40°19.20′ N	73°11.50′ W
40°19.33′ N	73°04.97′ W

[CGD 84–004, 52 FR 33589, Sept. 4, 1987]

§ 167.154 Off New York: South-eastern approach.

(a) A separation zone is established bounded by a line connecting the following geographical positions:

Latitude	*Longitude*
40°03.10′ N	73°17.93′ W
40°06.50′ N	73°22.73′ W
40°22.45′ N	73°43.55′ W
40°23.20′ N	73°42.70′ W
40°08.72′ N	73°20.10′ W
40°05.32′ N	73°15.28′ W

(b) A traffic lane for north-westbound traffic is established between the separation zone and a line connecting the following geographical positions:

Latitude	Longitude
40°08.98′ N	73°10.87′ W
40°12.42′ N	73°15.67′ W
40°24.02′ N	73°41.97′ W

(c) A traffic lane for south-eastbound traffic is established between the separation zone and a line connecting the following geographical positions:

Latitude	Longitude
40°21.82′ N	73°44.55′ W
40°02.80′ N	73°27.15′ W
39°59.43′ N	73°22.35′ W

[CGD 84–004, 52 FR 33589, Sept. 4, 1987, as amended by CGD 97–023, 62 FR 33365, June 19, 1997]

§ 167.155 Off New York: Southern approach.

(a) A separation zone is established bounded by a line connecting the following geographical positions:

Latitude	Longitude
39°45.70′ N	73°48.00′ W
40°20.63′ N	73°48.33′ W
40°20.87′ N	73°47.07′ W
39°45.70′ N	73°44.00′ W

(b) A traffic lane for northbound traffic is established between the separation zone and a line connecting the following geographical positions:

Latitude	Longitude
39°45.70′ N	73°37.70′ W
40°21.25′ N	73°45.85′ W

(c) A traffic lane for southbound traffic is established between the separation zone and a line connecting the following geographical positions:

Latitude	Longitude
40°20.53′ N	73°49.65′ W
39°45.70′ N	73°54.40′ W

NOTE: Use of LORAN C enables masters of appropriately equipped vessels to be informed highly accurately and continuously about the vessel's position in the area covered by this scheme.

[CGD 84–004, 52 FR 33589, Sept. 4, 1987]

§ 167.200 In the approaches to Chesapeake Bay Traffic Separation Scheme: General.

(a) The traffic separation scheme in the approaches to Chesapeake Bay consists of three parts: a Precautionary Area, an Eastern Approach, and a Southern Approach. The Southern Approach consists of inbound and outbound lanes for vessels drawing 13.5 meters (45 feet) of fresh water or less, separated by a deep-water (DW) route for inbound and outbound vessels with drafts exceeding 13.5 meters (45 feet) in fresh water and for naval aircraft carriers. Each part is defined geographically, using North American Datum 1983 (NAD 83), in §§ 167.201, 167.202, 167.203.

(b) All vessels approaching the Traffic Separation Scheme in the Approaches to Chesapeake Bay should use the appropriate inbound or outbound traffic lane.

[CGD 90–039, 59 FR 21937, Apr. 28, 1994]

§ 167.201 In the approaches to Chesapeake Bay: Precautionary area.

A precautionary area is established bounded by a circle with a two-mile radius, centered on the following geographic position:

Latitude	*Longitude*
36°56.14′ N	75°57.43′ W

[CGD 90–039, 59 FR 21937, Apr. 28, 1994]

§ 167.202 In the approaches to Chesapeake Bay: Eastern approach.

(a) A separation line is established connecting the following geographic positions:

Latitude	*Longitude*
36°58.66′ N	75°48.63′ W
36°56.79′ N	75°55.08′ W

(b) An inbound traffic lane is established between the separation line and a line connecting the following geographical positions:

Latitude	*Longitude*
36°59.14′ N	75°48.88′ W
36°57.24′ N	75°55.34′ W

(c) An outbound traffic lane is established between the separation line and a line connecting the following geographical positions:

Latitude	*Longitude*
36°56.29′ N	75°54.93′ W
36°58.18′ N	75°48.48′ W

[CGD 90–039, 59 FR 21937, Apr. 28, 1994]

§ 167.203 In the approaches to Chesapeake Bay: Southern approach.

(a) An inbound traffic lane is established between separation lines running through the following geographical positions:

Latitude	*Longitude*
36°50.33′ N	75°46.29′ W
36°52.90′ N	75°51.52′ W
36°55.96′ N	75°54.97′ W
36°55.11′ N	75°55.23′ W
36°52.35′ N	75°52.12′ W
36°49.70′ N	75°46.80′ W

(b) An outbound traffic lane is established between separation lines running through the following geographical positions:

Latitude	*Longitude*
36°49.52′ N	75°46.94′ W
36°52.18′ N	75°52.29′ W
36°54.97′ N	75°55.43′ W
36°54.44′ N	75°56.09′ W
36°51.59′ N	75°52.92′ W
36°48.87′ N	75°47.42′ W

(c) A deep-water route is established between lines running through the following geographical positions:

Latitude	*Longitude*
36°55.11′ N	75°55.23′ W
36°52.35′ N	75°52.12′ W
36°49.70′ N	75°46.80′ W
36°49.52′ N	75°46.94′ W
36°52.18′ N	75°52.29′ W
36°54.97′ N	75°55.43′ W

(d) The following vessels should use the deep-water route established in paragraph (c) of this section when bound for Chesapeake Bay from sea or to sea from Chesapeake Bay:

(1) Deep draft vessels (drafts greater than 13.5 meters/45 feet in fresh water).

(2) Naval aircraft carriers.

(e) It is recommended that a vessel using the deep-water route established in paragraph (c) of this section—

(1) Announce its intention on VHF–FM Channel 16 as it approaches Chesapeake Bay Southern Approach Lighted Whistle Buoy CB on the south end, or Chesapeake Bay Junction Lighted Buoy CBJ on the north end of the route;

(2) Avoid, as far as practicable, overtaking other vessels operating in the deep-water route; and

(3) Keep as near to the outer limit of the route which lies on the vessel's starboard side as is safe and practicable.

(f) Vessels other than those listed in paragraph (d) of this section should not use the deep-water route.

[CGD 90–039, 59 FR 21937, Apr. 28, 1994, as amended by 59 FR 28449, June 1, 1994]

ATLANTIC GULF COAST

§ 167.350 In the approaches to Galveston Bay Traffic Separation Scheme and precautionary areas.

(a) An inshore precautionary area bounded by a line connecting the following geographical positions:

Latitude	Longitude
(1) 29° 18.10′ N	94° 39.20′ W
(2) 29° 16.10′ N	94° 37.00′ W
(3) 29° 18.00′ N	94° 34.90′ W
(4) 29° 19.40′ N	94° 37.10′ W
(5) 29° 19.80′ N	94° 38.10′ W

(b) A traffic separation zone bounded by a line connecting the following geographical positions:

Latitude	Longitude
(6) 29° 17.13′ N	94° 35.86′ W
(7) 29° 09.55′ N	94° 25.80′ W
(8) 29° 09.41′ N	94° 25.95′ W
(9) 29° 17.00′ N	94° 36.00′ W

(c) A traffic lane for inbound (northwesterly heading) traffic is established between the separation zone and a line

connecting the following geographical positions:

Latitude	Longitude
(3) 29° 18.00′ N	94° 34.90′ W
(10) 29° 11.20′ N	94° 24.00′ W

(d) A traffic lane for outbound (southeasterly heading) traffic is established between the separation zone and line connecting the following geographical positions:

Latitude	Longitude
(2) 29° 16.10′ N	94° 37.00′ W
(11) 29° 07.70′ N	94° 27.80′ W

(e) An offshore precautionary area bounded by a line connecting the following geographical positions:

Latitude	Longitude
(11) 29° 07.70′ N	94° 27.80′ W
(12) 29° 06.40′ N	94° 26.20′ W
(13) 29° 06.40′ N	94° 23.90′ W
(14) 29° 09.10′ N	94° 20.60′ W
(10) 29° 11.20′ N	94° 24.00′ W

NOTE: A pilot boarding area is located near the center of the inshore precautionary area. Due to heavy vessel traffic, mariners are advised not to anchor or linger in this precautionary area except to pick up or disembark a pilot.

[CGD 81–080, 48 FR 36456, Aug. 11, 1983. Redesignated by CGD 84–004, 52 FR 33589, Sept. 4, 1987; CGD 89–019, 54 FR 28062, July 5, 1989; 54 FR 51972, Dec. 19, 1989]

PART 168—ESCORT REQUIREMENTS FOR CERTAIN TANKERS

Sec.

168.01 Purpose.
168.05 Definitions.
168.10 Responsibilities.
168.20 Applicable vessels.
168.30 Applicable cargoes.
168.40 Applicable waters and number of escort vessels.
168.50 Performance and operational requirements.
168.60 Pre-escort conference.

AUTHORITY: Section 4116(c), Pub. L. 101–380, 104 Stat. 520 (46 U.S.C. 3703 note).

SOURCE: CGD 91–202, 59 FR 42968, Aug. 19, 1994, unless otherwise noted.

§168.01 Purpose.

(a) This part prescribes regulations in accordance with section 4116(c) of the Oil Pollution Act of 1990 (OPA 90) (Pub. L. 101–380). The regulations will reduce the risk of oil spills from laden, single hull tankers over 5,000 GT by requiring that these tankers be escorted by at least two suitable escort vessels. The escort vessels will be immediately available to influence the tankers' speed and course in the event of a steering or propulsion equipment failure, thereby reducing the possibility of groundings or collisions.

(b) The regulations in this part establish minimum escort vessel requirements. Nothing in these regulations should be construed as relieving the master of a tanker from the duty to operate the vessel in a safe and prudent manner, taking into account the navigational constraints of the waterways to be traversed, other vessel traffic, and anticipated weather, tide, and sea conditions, which may require reduced speeds, greater assistance from escort vessels, or other operational precautions.

§168.05 Definitions.

As used in this part—

Disabled tanker means a tanker experiencing a loss of propulsion or steering control.

Escort transit means that portion of the tanker's voyage through waters where escort vessels are required.

Escort vessel means any vessel that is assigned and dedicated to a tanker during the escort transit, and that is fendered and outfitted with towing gear as appropriate for its role in an emergency response to a disabled tanker.

Laden means transporting in bulk any quantity of applicable cargo, except for clingage and residue in otherwise empty cargo tanks.

Single hull tanker means any self-propelled tank vessel that is not constructed with both double bottom and double sides in accordance with the provisions of 33 CFR 157.10d.

Tanker master means the licensed onboard person in charge of the tanker.

Tanker owner or operator means the owner or shoreside organization (individual, corporation, partnership, or association), including a demise charterer, responsible for the overall management and operation of the tanker.

§ 168.10 Responsibilities.

(a) The tanker owner or operator shall:

(1) select escort vessels that can meet the performance requirements of this part; and

(2) inform the tanker master of the performance capabilities of the selected escort vessels. This information must be provided to the master before beginning the escort transit.

(b) The tanker master shall operate the tanker within the performance capabilities of the escort vessels, taking into account speed, sea and weather conditions, navigational considerations, and other factors that may change or arise during the escort transit.

(c) In an emergency, the tanker master may deviate from the requirements of this part to the extent necessary to avoid endangering persons, property, or the environment, but shall immediately report the deviation to the cognizant Coast Guard Captain of the Port (COTP).

§ 168.20 Applicable vessels.

The requirements of this part apply to laden, single hull tankers of 5,000 gross tons or more.

§ 168.30 Applicable cargoes.

The requirements of this part apply to any petroleum oil listed in 46 CFR Table 30.25–1 as a pollution category I cargo.

§ 168.40 Applicable waters and number of escort vessels.

The requirements of this part apply to the following waters:

(a) *Prince William Sound:* Each tanker to which this part applies must be escorted by at least two escort vessels in those navigable waters of the United States within Prince William Sound, Alaska, and the adjoining tributaries, bays, harbors, and ports, including the navigable waters of the United States within a line drawn from Cape Hinchinbrook Light, to Seal Rocks Light, to a point on Montague Island at 60°14.6′ North, 146°59′ West, and the waters of Montague Strait east of a line between Cape Puget and Cape Cleare.

(b) *Puget Sound and certain associated waters:* Each tanker to which this part applies must be escorted by at least two escort vessels in those navigable waters of the United States and Washington State east of a line connecting New Dungeness Light with Discovery Island Light and all points in the Puget Sound area north and south of these lights. This area includes all the navigable waters of the United States within Haro Strait, Rosario Strait, the Strait of Georgia, Puget Sound, and Hood Canal, as well as those portions of the Strait of Juan de Fuca east of the New Dungeness-Discovery Island line.

§ 168.50 Performance and operational requirements.

(a) Except as provided in paragraph (c) of § 168.10, at all times during the escort transit each tanker to which this part applies:

(1) Must be accompanied by escort vessels that meet the performance requirements of paragraph (b) of this section (but not less than the number of escorts required by § 168.40).

(2) Must have the escort vessels positioned relative to the tanker such that timely response to a propulsion or steering failure can be effected.

(3) Must not exceed a speed beyond which the escort vessels can reasonably be expected to safely bring the tanker under control within the navigational limits of the waterway, taking into consideration ambient sea and weather conditions, surrounding vessel traffic, hazards, and other factors that may reduce the available sea room.

(b) The escort vessels, acting singly or jointly in any combination as needed, and considering their applied force vectors on the tanker's hull, must be capable of—

(1) Towing the tanker at 4 knots in calm conditions, and holding it in steady position against a 45-knot headwind;

(2) Stopping the tanker within the same distance that it could crash-stop itself from a speed of 6 knots using its own propulsion system;

(3) Holding the tanker on a steady course against a 35-degree locked rudder at a speed of 6 knots; and

(4) Turning the tanker 90 degrees, assuming a free-swinging rudder and a speed of 6 knots, within the same distance (advance and transfer) that it could turn itself with a hard-over rudder.

EFFECTIVE DATE NOTE: At 59 FR 54519, Nov. 1, 1994, §168.50 was amended by suspending paragraph (b)(2), effective November 17, 1994.

§168.60 Pre-escort conference.

(a) Before commencing an escort transit, the tanker master shall confer, by radio or in person, with the tanker pilot and the masters of the escort vessels regarding the escort operation.

(b) The purpose of the pre-escort conference is for all parties to plan and discuss particulars of the escort transit.

(c) At a minimum, the following topics must be addressed during the pre-escort conference:

(1) The destination, route, planned speed, other vessel traffic, anticipated weather, tide, and sea conditions, and other navigational considerations;

(2) The type and operational status of communication, towing, steering, and propulsion equipment on the tanker and escort vessels;

(3) The relative positioning and reaction time for the escort vessels to move into assist positions, including, if appropriate, pre-tethering the escort vessels at crucial points along the route;

(4) The preparations required on the tanker and escort vessels, and the methods employed in making an emergency towline connection, including stationing of deck crews, preparation of messenger lines, bridles, and other towing gear, and energizing appropriate deck equipment;

(5) The manner in which an emergency towline connection would be made (which escort vessel will respond, how messengers and towlines will be passed, etc.);

(6) Other relevant information provided by the tanker master, pilot or escort vessel masters.

PART 169—SHIP REPORTING SYSTEMS

Sec.

169.1 What is the purpose of this subpart?
169.5 What terms are defined?
169.10 What geographic coordinates are used?

Subpart B—Establishment of Two Mandatory Ship Reporting Systems for the Protection of Northern Right Whales

169.100 What mandatory ship reporting systems are established by this subpart?
169.102 Who is the shore-based authority?
169.105 Where is the northeastern reporting system located?
169.110 When is the northeastern reporting system in effect?
169.115 Where is the southeastern reporting system located?
169.120 When is the southeastern reporting system in effect?
169.125 What classes of ships are required to make reports?
169.130 When are ships required to make reports?
169.135 How must the reports be made?
169.140 What information must be included in the report?

AUTHORITY: Section 313, Pub. L. 105–383, 112 Stat. 3411, 3424, 33 U.S.C. 1230(d).

SOURCE: USCG–1999–5525, 64 FR 29234, June 1, 1999, unless otherwise noted.

EFFECTIVE DATE NOTE: By USCG–1999–5525, 64 FR 29234, June 1, 1999, and corrected at 64 FR 31037, June 9, 1999, part 169 is added, effective Aug. 2, 1999.

Subpart A—General

§169.1 What is the purpose of this subpart?

This subpart prescribes the requirements for mandatory ship reporting systems. Ship reporting systems are used to provide, gather, or exchange information through radio reports. The information is used to provide data for many purposes including, but not limited to: navigation safety, environmental protection, vessel traffic services, search and rescue, weather forecasting and prevention of marine pollution.

§169.5 What terms are defined?

(a) *Mandatory ship reporting system* means a ship reporting system that requires the participation of specified vessels or classes of vessels, and that is established by a Government or Governments after adoption of a proposed system by the International Maritime Organization (IMO) as complying with all requirements of regulation V/8–1 of

the International Convention for the Safety of Life at Sea, 1974, as amended (SOLAS), except paragraph (e) thereof.

(b) *Shore-based authority* means the government appointed office or offices that will receive the reports made by ships entering each of the mandatory ship reporting systems. The office or offices will be responsible for the management and coordination of the system, interaction with participating ships, and the safe and effective operation of the system. Such an authority may or may not be an authority in charge of a vessel traffic service.

§ 169.10 What geographic coordinates are used?

Geographic coordinates expressed in terms of latitude or longitude, or both, are not intended for plotting on maps or charts where the referenced horizontal datum is the North American Datum of 1983 (NAD 83), unless such geographic coordinates are expressly labeled NAD 83. Geographic coordinates without the NAD 83 reference may be plotted on maps or charts referenced to NAD 83 only after application of the appropriate corrections that are published on the particular map or chart being used.

Subpart B—Establishment of Two Mandatory Ship Reporting Systems for the Protection of Northern Right Whales

§ 169.100 What mandatory ship reporting systems are established by this subpart?

This subpart prescribes requirements for the establishment and maintenance of two mandatory ship reporting systems for the protection of the endangered northern right whale (also known as the North Atlantic right whale). These two systems are designated for certain areas of the East Coast of the United States. One system is located in the northeast and is identified as WHALESNORTH. The other system is located in the southeast and is identified as WHALESSOUTH.

NOTE: 50 CFR 222.32 contains requirements and procedures concerning northern right whale approach limitations and avoidance procedures.

§ 169.102 Who is the shore-based authority?

The U.S. Coast Guard is the shore-based authority for these mandatory ship reporting systems.

§ 169.105 Where is the northeastern reporting system located?

Geographical boundaries of the northeastern area include the waters of Cape Cod Bay, Massachusetts Bay, and the Great South Channel east and southeast of Massachusetts. The coordinates (NAD 83) of the area are as follows: from a point on Cape Ann, Massachusetts at 42°39′N, 70°37′W; then northeast to 42°45′N, 70°13′W; then southeast to 42°10′N, 68°31′W; then south to 41°00′N, 68°31′W; then west to 41°00′N, 69°17′W; then northeast to 42°05′N, 70°02′W, then west to 42°04′N, 70°10′W; and then along the Massachusetts shoreline of Cape Cod Bay and Massachusetts Bay back to the point on Cape Anne at 42°39′N, 70°37′W.

§ 169.110 When is the northeastern reporting system in effect?

The mandatory ship reporting system in the northeastern United States operates year-round.

§ 169.115 Where is the southeastern reporting system located?

Geographical boundaries of the southeastern area include coastal waters within about 25 nautical miles (45 kilometer) along a 90-nautical mile (170-kilometer) stretch of the Atlantic seaboard in Florida and Georgia. The area coordinates (NAD 83) extends from the shoreline east to longitude 80°51.6′W with the southern and northern boundaries at latitude 30°00′N and 31°27′N, respectively.

§ 169.120 When is the southeastern reporting system in effect?

The mandatory ship reporting system in the southeastern United States operates during the period beginning on 15 November and ends on 16 April of each year.

§ 169.125 What classes of ships are required to make reports?

Each ship of 300 gross tons or greater must participate in the reporting systems, except government ships exempted from reporting by regulation V/8–1(c) of SOLAS. However, exempt ships are encouraged to participate in the reporting systems.

§ 169.130 When are ships required to make reports?

Participating ships must report to the shore-based authority upon entering the area covered by a reporting system. Additional reports are not necessary for movements made within a system or for ships exiting a system.

§ 169.135 How must the reports be made?

(a) A ship equipped with INMARSAT C must report in IMO standard format as provided in Table 169.140 in § 169.140.

(b) A ship not equipped with INMARSAT C must report to the Coast Guard using other means, listed below in order of precedence—

(1) Narrow band direct printing (SITOR),

(2) HF voice communication, or

(3) MF or VHF voice communications.

(c) SITOR or HF reports made directly to the Coast Guard's Communications Area Master Station Atlantic (CAMSLANT) in Chesapeake, VA, or MF or VHF reports made to Coast Guard activities or groups, should only be made by ships not equipped with INMARSAT C. Ships in this category must provide all the required information to the Coast Guard watchstander.

§ 169.140 What information must be included in the report?

Each ship report made to the shore-based authority must follow the standard reporting and format requirements listed in table 169.140.

Table 169.140 Requirements for ship reports

Telegraphy	Function	Information required
Name of system	System identifier	Ship reporting system WHALESNORTH or WHALES SOUTH.
A	Ship	The name, call sign or ship station identity, IMO number, and flag of the vessel.
B	Date and time of event	A 6-digit group giving day of month (first two digits), hours and minutes (last four digits.
E	True course	A 3-digit group.
F	Speed in knots and tenths of knots	A 3-digit group.
H	Date, time and point of entry into system	Entry time expressed as in (B) and entry position expressed as- (1) a 4-digit group giving latitude in degrees and minutes suffixed with N(north) or S (south) and a 5-digit group giving longitude in degrees and minutes suffixed with E (east) or W (west); or (2) True bearing (first 3 digits) and distance (state distance) in nautical miles from a clearly identified landmark (state landmark).
I	Destination and expected time of arrival	Name of port and date time group expressed as in (B).
L	Route information	Intended track.

INDEX TO SUBCHAPTER P—PORTS AND WATERWAYS SAFETY

EDITORIAL NOTE: This listing is provided for informational purposes only. It is compiled and kept up-to-date by the Coast Guard, Department of Transportation.

Section

A

Appendix A to 164.38 - Performance Standards for Automatic Radar Plotting Aids (ARPA)
Annex 1 to Appendix A - Definitions of Terms to be Used Only in Connection with ARPA Performance Standards
Annex 2 to Appendix A - Operational Scenarios
Annex 3 to Appendix A - Sensor Errors
Appendix B to 164.38 - U.S. Maritime Administration Collision Avoidance System Specifications
Applicable .....
  Cargoes 168.30
  Vessels 168.20
  Waters and number of escort vessels (Prince William Sound and Puget Sound) 168.40
Applicability exception for foreign vessels 164.02
Applicability, Navigation Safety Regulations 164.01
Application, Towing of Barges 163.01
  Alaskan Coastal areas
  Gulf to Hinchinbrook Safety Fairway (inbound vessel traffic) ..... 166.400(b)(ii)
  Hinchinbrook to Gulf Safety Fairway (outbound vessel traffic) ..... 166.400(b)(iii)
  North/South Safety Fairway ..... 166.400(b)(ii)
  Prince William Sound Safety Fairway ..... 166.400(b)(1)
  Unimak Pass Safety Fairway (East/West Safety Fairway) ..... 166.400(b)(2)(i)
Atlantic Coastal areas .....
  Nantucket to Ambrose Safety Fairway ..... 166.500(b)(1)(ii)
  Off New York Shipping Safety Fairway; Ambrose to Nantucket Safety Fairway ..... 166.500(b)(1)(i)
Automatic Identification System Shipborne Equipment 164.43
Automatic Radar Plotting Aids (ARPA) 164.38

B

Bunching of tows 163.20

C

Californian Coastal areas
  Port Hueneme Safety Fairway ..... 166.300(b)(1)
Charts and publications 164.33
Charts, publications, and equipment: General 164.30
Chesapeake Bay approach traffic separation scheme 167.200
Control of Vessel and Facility Operations ..... Subpart B
  Applicability 160.103
  Compliance with orders 160.105
  Denial of entry 160.107

Prohibition of vessel operation and cargo transfers 160.113
Purpose 160.101
Special orders applying to vessel operations 160.111
Withholding of clearance 160.115

D

Definitions 164.70, 166.105, 167.5, 168.05
Deviations from rules:
And reporting non-operating equipment 164.53
Continuing operation or period of time 164.55
Emergency 164.51
Devices to indicate speed and distance 164.40

E

Eastern approach 167.202
Off Ambrose Light 167.153
Off Nantucket 167.152
Electronic position fixing devices 164.41
Equipment .....
All vessels 164.35
Vessels of 10,000 gross tons or more 164.37
Escort requirements for certain tankers ..... Part 168

G

Galveston Bay approach traffic separation scheme and precautionary area 167.350
General, Ports and Waterways Safety ..... Part 160-Subpart A
Appeals 160.7
Definitions 160.3
Delegations 160.5
Purpose 160.1
General, Regulated Navigation Areas and Limited
Access Areas ..... Part 165-Subpart A
Establishment procedure 165.5
Geographic coordinates 165.8
Notification 165.7
Purpose of part 165.1
Geographic coordinates 166.103, 167.3

I

Incorporation by reference, ... 164.03
Inland waterways navigation regulations ..... Part 162
Atlantic Ocean, all waterways tributary south of Chesapeake Bay and all waterway tributary to the Gulf of Mexico east and South of St. Marks, FL 162.65
Black Rock Canal and Lock at Buffalo, New York 162.175
Buffalo and Rochester Harbors, New York 162.165
Channel leading to San Juan Harbor, P.R.; use, administration, and navigation 162.260
Channel of Christina River, Del; navigation 162.35
Channel of Tuckerton Creek, N.J.; navigation 162.30
Columbia and Williamette Rivers, Washington and Oregon; administration and navigation 162.225
Columbia River, Wash 162.230
Duluth-Superior Harbor, Minnesota and Wisconsin 162.110
Flushing Bay near LaGuardia Airport, Flushing, N.Y. restricted

area 162.20
General 162.1
Gulf of Mexico, all waterways tributary (except the Mississippi River, its tributaries, South and Southwest Passes and the Atchafalaya River) from St. Marks, Flas., to the Rio Grande 162.75
Hoover Dam, Lake Mead, and Lake Mohave (Colorado River), Ariz.-Nev 162.220
Kenai River, Kenai, Alaska; use, administration, and navigation 162.245
Keweenaw Waterway, Mich 162.115
Inland waterway from Delaware River to Chesapeake Bay, Del. and Md. (Chesapeake and Delaware Canal) 162.40
Lake Huron to Lake Erie, connecting waters
Anchorage grounds 162.136
Communications rules 162.132
General rules 162.130
Miscellaneous rules 162.140
Speed rules 162.138
Traffic rules 162.134
Lake Michigan, harbors on 162.120
Lake Tahoe, Calif.; restricted areas along south shore 162.210
Lake Tahoe, Nev.; restricted area adjacent to Nevada Beach 162.215
Manhasett Bay, N.Y.; seaplane restricted area 162.15
Marine del Ray, Calif.; restricted area 162.200
Maumee Bay and River, Ohio 162.150
Mississippi River below mouth of Ohio River, including South and Southwest Passes 162.80
Missouri River; administration and navigation 162.105
Monroe Harbor, Mich 162.145
Ohio River at Louisville, KY 162.100
Port Alexander, Alaska; speed of vessels 162.250
Puget Sound Area, Wash 162.235
Restricted areas in vicinity of Maritime Administration Reserve Fleets 162.270
Sandusky and Huron Harbors, Ohio 162.155
Santa Monica Bay, Calif.; restricted area 162.200
St. Marys River, Sault Ste. Marie, Michigan 162.117
Sturgeon Bay and the Sturgeon Bay Ship Canal, Wisconsin.162.125 .....
Suisun Bay, San Joaquin River Sacramento River, and connecting waters, CA 162.205
Tongass Narrows, Alaska; navigation 162.240
Vermilion, Lorain, Cleveland, Fairport, Ashtabula, and Coneaut Harbors, Ohio 162.160
White River, Arkansas Post Canal, Arkansas River, and Verdigris River between Mississippi River, Ark., and Catoosa, Okla.: use, administration, and navigation 162.90
Wrangell Narrows, Alaska; use, administration, and navigation 162.255
Yazoo Diversion Canal, Vicksburg, Miss., from its mouth at Kleinston Landing to Fisher Street; navigation 162.85

M

Maintenance, failure, and reporting 164.82
Marine casualty reporting and record retention 164.61
Modification of areas 166.110
Modification of schemes 167.15

N

Navigation ..... Part 164

Bridge visibility 164.15
Equipment, Charts or Maps, and Publications of Towing Vessels of 12 Meters or More in Length....Table 164.72 .....
Safety equipment, charts or maps, and publications required on towing vessels 164.72
Tests and inspections 164.80
Tests before entering or getting underway 164.25
Underway, general 164.11
Underway, tankers 164.13
Underway, towing vessels 164.78
Navigation safety regulations ..... Part 164
Notifications of Arrivals, Departures, Hazardous Conditions, and Certain Dangerous Cargoes ..... Subpart C
Applicability and exceptions to applicability 160.201
Definitions 160.203
Notice of Arrival: Vessels bound for ports or places in the U.S 160.207
Notice of Arrival: Vessels carrying certain dangerous cargoes 160.211
Notice of departure: Vessels carrying certain dangerous cargoes 160.213
Notice of hazardous conditions 160.215
Waiver 160.205

O

Off New York Traffic Separation Scheme and Precautionary Areas 167.150
Offshore traffic separation schemes ..... Part 167
Operating rules 167.10

P

Performance and operational requirements 168.50
Ports and waterways safety - general ..... Part 160
Precautionary areas 167.151, 201
Pre-escort conference 168.60

R

Rate of turn indicator 164.42
Regulated navigation areas and limited access areas ..... Part 165
Regulated Navigation Areas ..... Subpart B
General regulations 165.13
Regulated navigation areas 165.10
Vessel operating requirements (regulations) 165.11
Responsibilities 168.10
Restricted Waterfront Areas ..... Part 165-Subpart E
Restricted waterfront areas 165.40

S

Steering gear: Foreign tankers 164.39
Safety Zones ..... Part 165-Subpart C
General regulations 165.23
Safety zones 165.20
Security Zones ..... Part 165-Subpart D
General regulations 165.33
Security zones 165.30
Specific Regulated Navigation Areas and Limited Access Areas... Part 165-Subpart F
First Coast Guard District - Boston, MA
Regulated Navigation Areas
Kill Van Kull, New York and New Jersey 165.165

Kittery, Maine 165.101
New Haven Harbor, Quinnipiac River, Mill River 165.150
Providence River, Providence, R.I 165.122
Safety Zones
Boon Island, ME, sunken vessel Empire Knight.....165.141
Boston Harbor, Boston, Massachusetts.....165.110, 165.111
Burlington Bay, Vermont; Annual Burlington Independence Day Celebration Fireworks Display 165.166
Chelsea River, Boston Inner Harbor, Boston, MA 165.120
East River, N.Y.; Annual South Street Seaport Memorial Day Fireworks Display.....165.175
East River, N.Y.; Annual South Street Seaport New Year's Eve Fireworks Display.....165.174
Hempstead Harbor, Long Island, N.Y.; Annual North Hempstead Memorial Day Fireworks Display 165.178
Hudson River, N.Y.; Annual Rensselaer Festival Fireworks Display 165.170
Hudson River, N.Y.; Heritage of Pride Fireworks Display 165.170
New York, New Jersey, Sandy Hook Channel, Raritan Bay, Arthur Kill 165.160
Navisink River, Red Bank, New Jersey; Annual ''Fireworks on the Navisink''.....165.161
Northville Industries Offshore Platform, Riverhead, Long Island, New York 165.155
Portsmouth Harbor, Portsmouth, New Hampshire 165.103
Rhode Island Sound, Narragansett Bay, Providence River 165.121
USS Cassin Young, Boston Massachusetts.....165.112
Security Zones
Kennebunkport, ME, Walkers Point 165.102
New London Harbor, Connecticut 165.140
Sandy Hook Bay, N.J 165.130
Fifth Coast Guard District
Regulated Navigation Areas
Chesapeake Bay Entrance and Hampton Roads, VA and adjacent waters.....165.501
Chesapeake Bay ice navigation season 165.503
Delaware Bay and River.....165.510
Safety Zones
Cove Point, Chesapeake Bay, Maryland.....165.502
Cape Fear and Northeast Cape Fear Rivers, NC.....165.530
Cape Fear River, Wilmington, North Carolina.....165.515
Security Zone
Newport News Shipbuilding and Dry Dock Company Shipyard James River, Newport News, VA.....165.504
Seventh Coast Guard District.....
Regulated Navigation Areas
Atlantic Ocean, Charleston, SC.....165.714
Egmont Channel, Tampa Bay, FL 165.709
King's Bay, Georgia 165.730
Sparkman Channel, Tampa, FL 165.752
Tampa Bay, FL 165.753
Safety Zones
Ashley River, Charleston, SC.....165.713
Brunswick, GA, Turtle River, Vicinity of Sydney Lanier Bridge 165.735
Charleston Harbor and Cooper River, Charleston, SC.....165.708
Cumberland Sound, GA and St. Mary's River Entrance Channel 165.731

Jacksonville, FL 165.728
Port Everglades, Fort Lauderdale, FL 165.705
Savannah River, Savannah, GA 165.T0704
St. Johns River, Jacksonville, FL.....165.720
Tampa Bay, FL 165.703, 165.704
Security Zones
Charleston Harbor and Cooper River, Charleston, SC.....165.708
Cumberland Sound, GA, and St. Mary's River Entrance Channel
..... 165.731
Internal waters and territorial seas adjacent to Florida south of 26
degrees 19 minutes North latitude 165.TO7-013
Merritt Island, FL, vicinity Kennedy Space Center.....165.701
Port Canaveral Harbor, Cape Canaveral, FL.....165.705
Jacksonville Harbor, FL 165.729
St. John's River, Jacksonville, FL.....165.720, 165.722
Eighth Coast Guard District.....
Regulated Navigation Areas
Arkansas River, Mile 118.2 to 125.4, Little Rock, AK 165.817
Atachafalaya River, Berwick Bay, LA 165.811
Calcasieu River, LA 165.807
Mississippi River 165.803, 165.810
Monongahela, River, Mile 81.0 to 83.0.....165.819
Ohio River at Cincinnati, OH 165.821
Ohio River at Louisville, KY.....165.815
Sabine Neches Waterway, TX.....165.806
Safety Zones
Calcasieu Channel and Industrial Canal, Calcasieu River, Lake
Charles, LA 165.805
Corpus Christi Ship Channel, Corpus Christi, TX 165.808
Lower Mississippi River, vicinity of Old River Control Structures
..... 165.802
Snake Island, Texas City, TX; mooring and fleeting of vessels 165.804
Ninth Coast Guard District .....
Regulated Navigation Area
Great Lakes.....165.901
Safety Zones
Cuyahoga River and Old River, Cleveland, OH.....165.903
Lake Michigan at Chicago Harbor & Burnham Park Harbor 165.904
Niagra River at Niagra Falls, New York 165.902
USX Superfund Site, St. Louis River.....165.905
Security Zone
Lake Michigan at Chicago Harbor & Burnham Park Harbor 165.904
Eleventh Coast Guard District .....
Regulated Navigation Areas
San Diego Bay, CA.....165.1108
San Francisco Bay Region, CA 165.1114
San Pedro Bay, CA.....165.1109
Safety Zones
Los Angeles Harbor-San Pedro Bay, CA 165.1110
San Diego Bay, CA.....165.1107
San Pedro Bay, CA.....165.1101
Security Zones
San Diego Bay, CA .....165.1102, 165.1103, 165.1104, 165.1105, & 165.1106
Wilson Cove, San Clemente Island, CA 165.1111
Thirteenth Coast Guard District .....
Regulated Navigation Areas
Puget Sound, and adjacent waters in Northwestern Washington.....165.1301

Puget Sound and adjacent waters, WA 165.1303
Safety Zones
Bellingham Bay, Bellingham, WA 165.1304
Columbia River, Vancouver, WA 165.1308
Commencement Bay, Tacoma, WA 165.1305
Elliot Bay, Seattle, WA 165.1307
Lake Union, Seattle, WA 165.1306
Security Zone
Bangor Naval Submarine Base, Bangor, WA 165.1302
Fourteenth Coast Guard District.....
Regulated Navigation Area
Apra Outer Harbor, Guam 165.1402
Safety Zones
Apra Harbor, Guam.....165.1401
Pacific Missle Range Facility (PMRF), Barking Sands, Island of Kauai, Hawaii 165.1406
Security Zones
Apra Harbor, Guam.....165.1404
Tinian, Commonwealth Northern Marianas Islands.....165.1403
Seventeenth Coast Guard District.....
Regulated Navigation Area
Prince William Sound, AK.....165.1704
Safety Zones
Ammunition Island, Port Valdez, AK 165.1703
Crescent Harbor, Sitka, AK 165.1707
Gastineau Channel, Juneau, AK.....165.1702, 165.1706
Ketchikan Harbor, Ketchikan, AK 165.1705
Port Valdez, Valdez, AK 165.1701
Tongass Narrows, Ketchikan, AK 165.1708
Shipping Safety Fairways and Anchorages..... Part 166
Shipping safety fairways and anchorage areas, Gulf of Mexico.....
Aransas Pass Anchorage Areas.....166.200(d)(5)
Aransas Pass Safety Fairway .....166.200(d)(4)
Atchafalaya Pass Safety Fairway.....166.200(d)(20)
Barataria Pass Safety Fairway.....166.200(d)(24)
Bayou Grand Caillou Safety Fairway .....166.200(d)(21)
Belle Pass Safety Fairway .....166.200(d)(23)
Biloxi Safety Fairway.....166.200(d)(35)
Brazos Santiago Pass Anchorage Areas.....166.200(d)(2)
Brazos Santiago Pass Safety Fairway .....166.200(d)(1)
Calcasieu Pass Anchorage Areas; (Calcasieu Pass North Anchorage Area).....166.200(d)(16)(i)
Calcasieu Pass Anchorage Areas; (Calcasieu Pass South Anchorage Area).....166.200(d)(16)(ii)
Calcasieu Pass Safety Fairway .....166.200(d)(15)
Cat Island Pass Safety Fairway .....166.200(d)(22)
Charlotte Anchorage.....166.200(d)(51)
Charlotte Safety Fairways.....166.200(d)(50)
Coastwise Safety Fairways; (Aransas Pass to Calcasieu Pass).....166.200(d)(14)(ii)
Coastwise Safety Fairways; (Brazos Santiago Pass to Aransas Pass .....166.200(d)(14)(i)
Empire to the Gulf Safety Fairway.....166.200(d)(26)
Freeport Harbor Anchorage Areas.....166.200(d)(9)
Freeport Harbor Safety Fairway .....166.200(d)(8)
Freshwater Bayou Safety Fairway .....166.200(d)(18)
Galveston Entrance Anchorage Areas.....166.200(d)(11)
Galveston Entrance Safety Fairway .....166.200(d)(10)
Gulf Safety Fairway, Aransas Pass Safety Fairway to Southwest Pass

Safety Fairway ..... 166.200(d)(27)
Grand Bayou Pass Safety Fairway ..... 166.200(d)(25)
Gulfport Safety Fairway ..... 166.200(d)(34)
Heald Bank Cutoff Safety Fairway ..... 166.200(d)(53)
Horn Island Pass to Mobile Ship Channel Safety Fairway ..... 166.200(d)(38)
Louisiana Offshore Oil Port (LOOP) Shipping Safety Fairway to Safety Zone ..... 166.200(d)(52)(i)
Lower Mud Lake Safety Fairway ..... 166.200(d)(17)
Matagorda Entrance Anchorage Areas ..... 166.200(d)(7)
Matagorda Entrance Safety Fairway ..... 166.200(d)(6)
Mississippi River-Gulf Outlet Anchorage ..... 166.200(d)(33)(i)
Mississippi River-Gulf Outlet Channel to Mobile Ship Channel Safety Fairway ..... 166.200(d)(32)(ii)
Mississippi River-Gulf Outlet Safety Fairway ..... 166.200(d)(32)(i)
Mobile Anchorage ..... 166.200(d)(40)
Mobile Safety Fairway (Mobile Ship Channel Safety Fairway) ..... 166.200(d)(39)(i)
Mobile Ship Channel to Sea Safety Fairway ..... 166.200(d)(39)(ii)
Mobile to Pensacola Safety Fairway ..... 166.200(d)(39)(iii)
Panama City Anchorage ..... 166.200(d)(45)
Panama City Safety Fairways ..... 166.200(d)(44)
Pascagoula Safety Fairway ..... 166.200(d)(37)
Pensacola Anchorage ..... 166.200(d)(42)(i)
Pensacola Safety Fairway ..... 166.200(d)(41)
Pensacola to Panama City Safety Fairway ..... 166.200(d)(43)
Port Mansfield Safety Fairway ..... 166.200(d)(3)
Port St. Joe Anchorage ..... 166.200(d)(47)
Port St. Joe Fairway to Panama City Fairway ..... 166.200(d)(46)
Sabine Bank Offshore (North) Anchorage Area ..... 166.200(d)(13)(ii)
Sabine Bank Offshore (South) Anchorage Area ..... 166.200(d)(13)(iii)
Sabine Pass Anchorage Areas; (Sabine Pass Inshore Anchorage Area) ..... 166.200(d)(13)(i)
Sabine Pass Safety Fairway ..... 166.200(d)(12)
Ship Island Pass to Horn Island Pass Safety Fairway ..... 166.200(d)(36)
South of Gulf Safety Fairway ..... 166.200(d)(52)(ii)
South Pass (Mississippi River) Anchorage ..... 166.200(d)(31)
South Pass (Mississippi River) Safety Fairway; South Pass to Sea Safety Fairway ..... 166.200(d)(30)(i)
South Pass (Mississippi River) to Mississippi River-Gulf Outlet Channel Safety Fairway ..... 166.200(d)(30)(ii)
Southwest Pass (Mississippi River) Anchorage ..... 166.200(d)(29)
Southwest Pass Safety Fairway ..... 166.200(d)(19)
Southwest Pass (Mississippi River) Safety Fairway; .....
Southwest Pass (Mississippi River) to Gulf Safety Fairway ..... 166.200(d)(28)(i)
Southwest Pass (Mississippi River) to Sea Safety Fairway ..... 166.200(d)(28)(ii)
Southwest Pass (Mississippi River) to South Pass (Mississippi River) Safety Fairway ..... 166.200(d)(28)(iii)
Tampa Anchorages (Eastern Tampa Fairway Anchorage) ..... 166.200(d)(49)(i)
Tampa Safety Fairways ..... 166.200(d)(48)
Western Tampa Fairway Anchorage ..... 166.200(d)(49)(ii)
South-eastern approach 167.154
Southern approach 167.155, 167.203

T

Towing of barges ..... Part 163
Tows of seagoing barges within inland waters 163.05

Index

V

Vessel Movement Reporting System (VMRS) ..... Subpart B
Applicability 161.16
Definitions 161.17
Final Report (FR) 161.22
IMO Standard Ship Reporting System ..... 161.18(a)
Position Report (PR) 161.20
Purpose and intent 161.15
Reporting requirements 161.18
Sailing Plan (SP) 161.19
Sailing Plan Deviation Report (DR) 161.21
Vessel traffic management ..... Part 161
Vessel Traffic Services ..... Subpart A
General Rules
Applicability 161.3
Definitions 161.2
Deviations from the rules 161.5
Purpose and Intent 161.1
Requirement to carry the rules 161.4
Services, VTS Measures, and Operating Requirements Services 161.10
Vessel operating requirements 161.12
VTS Call Signs, Designated Frequencies, and Monitoring Areas ..... 161.12(b)
VTS measures 161.11
VTS Special Area operating requirements 161.13
Vessel Traffic Service Areas, Cooperative Vessel Traffic Service Area,
Vessel Traffic Service Special Areas, and Reporting Points ..... Subpart C
Vessel Traffic Service .....
Berwick Bay 161.40
Berwick Bay Reporting Points ..... 161.40(c)
Houston/Galveston 161.35
Houston/Galveston Precautionary Areas ..... 161.35(b)
Houston/Galveston Reporting Points ..... 161.35(c)
Louisville 161.30
New York Area 161.25
San Francisco 161.50
St. Marys River 161.45
St. Marys River Reporting Points ..... 161.45(b)
Prince William Sound 161.60
Prince William Sound Reporting Points ..... 161.60(d)
Puget Sound and the Cooperative Vessel Traffic Service for the Juan
de Fuca Region 161.55

SUBCHAPTERS Q–R [Reserved]
SUBCHAPTER S—BOATING SAFETY

PART 173—VESSEL NUMBERING AND CASUALTY AND ACCIDENT REPORTING

Subpart A—General

Sec.
173.1 Purpose.
173.3 Definitions.

Subpart B—Numbering

173.11 Applicability.
173.13 Exemptions.
173.15 Vessel number required.
173.17 Reciprocity.
173.19 Other numbers prohibited.
173.21 Certificate of number required.
173.23 Inspection of certificate.
173.25 Location of certificate of number.
173.27 Numbers: Display; size; color.
173.29 Notification to issuing authority.
173.31 Surrender of certificate of number.
173.33 Removal of number.
173.35 Coast Guard validation sticker.

Subpart C—Casualty and Accident Reporting

173.51 Applicability.
173.53 Immediate notification of death or disappearance.
173.55 Report of casualty or accident.
173.57 Casualty or accident report.
173.59 Where to report.

Subpart D—Issue of Certificate of Number

173.71 Application for certificate of number.
173.73 Duplicate certificate of number.
173.75 Temporary certificate.
173.77 Validity of certificate of number.
173.79 Expiration of Coast Guard certificate of number.
173.81 Coast Guard forms for numbering and casualty reporting.
173.83 Availability of Coast Guard forms.
173.85 Coast Guard fees.

APPENDIX A TO PART 173—ISSUING AUTHORITIES AND REPORTING AUTHORITIES

AUTHORITY: 46 U.S.C. 6101, 12302; 49 CFR 1.46.

SOURCE: CGD 72–54R, 37 FR 21399, Oct. 7, 1972, unless otherwise noted.

Subpart A—General

§ 173.1 Purpose.

This part presecibes requirements for numbering vessels and for reporting casualties and accidents to implement sections 6101, 6102, 12301 and 12302 of Title 46, United States Code.

[CGD 89–048, 54 FR 27002, June 27, 1989]

§ 173.3 Definitions.

As used in this part:

(a) [Reserved]

(b) *Issuing authority* means a State that has a numbering system approved by the Coast Guard or the Coast Guard where a number system has not been approved. Issuing authorities are listed in Appendix A of this part.

(c) *Operator* means the person who is in control or in charge of a vessel while it is in use.

(d) *Owner* means a person who claims lawful possession of a vessel by virtue of legal title or equitable interest therein which entitles him to such possession.

(e) *Person* means an individual, firm, partnership, corporation, company, association, joint-stock association, or governmental entity and includes a trustee, receiver, assignee, or similar representative of any of them.

(f) *Reporting authority* means a State that has a numbering system approved by the Coast Guard or the Coast Guard where a numbering system has not been approved. Reporting authorities are listed in Appendix A of this part.

(g) *State* means a State of the United States, the Commonwealth of Puerto Rico, the Virgin Islands, Guam, American Samoa, and the District of Columbia.

(h) *State of principal use* means the State on whose waters a vessel is used or to be used most during a calendar year.

(i) *Use* means operate, navigate, or employ.

[CGD 72–54R, 37 FR 21399, Oct. 7, 1972, as amended by CGD 77–117A, 43 FR 17941, Apr. 27, 1978; CGD 89–048, 54 FR 2702, June 27, 1989]

Subpart B—Numbering

§173.11 Applicability.

This subpart applies to each vessel equipped with propulsion machinery of any type used on waters subject to the jurisdiction of the United States and on the high seas beyond the territorial seas for vessels owned in the United States except:

(a) Foreign vessels temporarily using waters subject to U.S. jurisdiction;

(b) Military or public vessels of the United States, except recreational-type public vessels;

(c) A vessel whose owner is a State or subdivision thereof, which is used principally for governmental purposes, and which is clearly identifiable as such;

(d) Ships' lifeboats;

(e) A vessel which has or is required to have a valid marine document as a vessel of the United States.

§173.13 Exemptions.

Where the Coast Guard issues numbers, the following classes of vessels are exempt, under Section 12303 of Title 46, United States Code, from the numbering provisions of Sections 12301 and 12302 of Title 46, United States Code, and this part:

(a) A vessel that is used exclusively for racing.

(b) A vessel equipped with propulsion machinery of less than 10 horsepower that:

(1) Is owned by the owner of a vessel for which a valid certificate of number has been issued;

(2) Displays the number of that numbered vessel followed by the suffix ''1'' in the manner prescribed in §173.27; and

(3) Is used as a tender for direct transportation between that vessel and the shore and for no other purpose.

§173.15 Vessel number required.

(a) Except as provided in §173.17, no person may use a vessel to which this part applies unless:

(1) It has a number issued on a certificate of number by the issuing authority in the State in which the vessel is principally used; and

(2) The number is displayed as described in §173.27.

(b) This section does not apply to a vessel for which a valid temporary certificate has been issued to its owner by the issuing authority in the State in which the vessel is principally used.

§173.17 Reciprocity.

(a) Section 12302(c) of Title 46, United States Code, states:

> When a vessel is numbered in a State, it is deemed in compliance with the numbering system of a State in which it temporarily is operated.

(b) Section 12302(d) of Title 46, United States Code, states:

> When a vessel is removed to a new State of principal operation, the issuing authority of that State shall recognize the validity of the number issued by the original State for 60 days.

[CGD 89–048, 54 FR 27002, June 27, 1989]

§173.19 Other numbers prohibited.

No person may use a vessel to which this part applies that has any number that is not issued by an issuing authority for that vessel on its forward half.

§173.21 Certificate of number required.

(a) Except as provided in §§173.13 and 173.17, no person may use a vessel to which this part applies unless it has on board:

(1) A valid certificate of number or temporary certificate for that vessel issued by the issuing authority in the State in which the vessel is principally used; or

(2) For the vessel described in paragraph (b) of this section, a copy of the lease or rental agreement, signed by the owner or his authorized representative and by the person leasing or renting the vessel, that contains at least:

(i) The vessel number that appears on the certificate of number; and

(ii) The period of time for which the vessel is leased or rented.

(b) Section 12304(a) of Title 46, United States Code, states in part: The certificate of number for a vessel less than 26 feet in length and leased or rented to another for the latter's noncommercial operation of less than 7 days may be retained on shore by the vessel's owner or representative at the place from which the vessel departs or returns to

the possession of the owner or the owner's representative.

[CGD 72–54R, 37 FR 21399, Oct. 7, 1972, as amended by CGD 77–117A, 43 FR 17941, Apr. 27, 1978; CGD 89–048, 54 FR 27002, June 27, 1989]

§ 173.23 Inspection of certificate.

Each person using a vessel to which this part applies shall present the certificate or lease or rental agreement required by § 173.21 to any Federal, State, or local law enforcement officer for inspection at his request.

§ 173.25 Location of certificate of number.

No person may use a vessel to which this part applies unless the certificate or lease or rental agreement required by § 173.21 is carried on board in such a manner that it can be handed to a person authorized under § 173.23 to inspect it.

§ 173.27 Numbers: Display; size; color.

(a) Each number required by § 173.15 must:

(1) Be painted on or permanently attached to each side of the forward half of the vessel except as allowed by paragraph (b) or required by paragraph (c) of this section;

(2) Be in plain vertical block characters of not less than 3 inches in height;

(3) Contrast with the color of the background and be distinctly visible and legible;

(4) Have spaces or hyphens that are equal to the width of a letter other than ''I'' or a number other than ''1'' between the letter and number groupings (Example: DC 5678 EF or DC–5678–EF); and

(5) Read from left to right.

(b) When a vessel is used by a manufacturer or by a dealer for testing or demonstrating, the number may be painted on or attached to removable plates that are temporarily but firmly attached to each side of the forward half of the vessel.

(c) On vessels so configured that a number on the hull or superstructure would not be easily visible, the number must be painted on or attached to a backing plate that is attached to the forward half of the vessel so that the number is visible from each side of the vessel.

(d) Each number displayed on a tender exempted under § 173.13 must meet the requirements of paragraph (a) of this section and have a space or hyphen that is equal to the width of a letter other than ''I'' or a number other than ''1'' between the suffix and the number. (Example: DC 5678 EF 1 or DC–5678–EF–1.)

§ 173.29 Notification to issuing authority.

A person whose name appears as the owner of a vessel on a certificate of number shall, within 15 days, notify the issuing authority in a manner prescribed by the issuing authority of:

(a) Any change in his address;

(b) The theft or recovery of the vessel;

(c) The loss or destruction of a valid certificate of number;

(d) The transfer of all or part of his interest in the vessel; and

(e) The destruction or abandonment of the vessel.

§ 173.31 Surrender of certificate of number.

A person whose name appears as the owner of a vessel on a certificate of number shall surrender the certificate in a manner prescribed by the issuing authority within 15 days after it becomes invalid under paragraph (b), (c), (d), or (e) of § 173.77.

§ 173.33 Removal of number.

The person whose name appears on a certificate of number as the owner of a vessel shall remove the number and validation sticker from the vessel when:

(a) The vessel is documented by the Coast Guard;

(b) The certificate of number is invalid under paragraph (c) of § 173.77; or

(c) The vessel is no longer principally used in the State where the certificate was issued.

§ 173.35 Coast Guard validation sticker.

No person may use a vessel except a vessel exempted in § 173.13 that has a number issued by the Coast Guard unless it has the validation sticker issued

with the certificate of number displayed within 6 inches of the number.

Subpart C—Casualty and Accident Reporting

§173.51 Applicability.

(a) This subpart applies to each vessel used on waters subject to the jurisdiction of the United States and on the high seas beyond the territorial seas for vessels owned in the United States that:

(1) Is used by its operator for recreational purposes; or

(2) Is required to be numbered under this part.

(b) This subpart does not apply to a vessel subject to inspection under Title 46 U.S.C. Chapter 33.

[CDG 72–54R, 37 FR 21399, Oct. 7, 1972, as amended by CDG 84–099, 52 FR 47533, Dec. 14, 1987]

§173.53 Immediate notification of death or disappearance.

(a) When, as a result of an occurrence that involves a vessel or its equipment, a person dies or disappears from a vessel, the operator shall, without delay, by the quickest means available, notify the nearest reporting authority listed in Appendix A of this part of:

(1) The date, time, and exact location of the occurrence;

(2) The name of each person who died or disappeared;

(3) The number and name of the vessel; and

(4) The names and addresses of the owner and operator.

(b) When the operator of a vessel cannot give the notice required by paragraph (a) of this section, each person on board the vessel shall notify the casualty reporting authority or determine that the notice has been given.

§173.55 Report of casualty or accident.

(a) The operator of a vessel shall submit the casualty or accident report prescribed in §173.57 to the reporting authority prescribed in §173.59 when, as a result of an occurrence that involves the vessel or its equipment:

(1) A person dies;

(2) A person is injured and requires medical treatment beyond first aid;

(3) Damage to the vessel and other property totals more than $500 or there is a complete loss of the vessel; or

(4) A person disappears from the vessel under circumstances that indicate death or injury.

(b) A report required by this section must be made:

(1) Within 48 hours of the occurrence if a person dies within 24 hours of the occurrence;

(2) Within 48 hours of the occurrence if a person is injured and requires medical treatment beyond first aid, or disappears from a vessel; and

(3) Within 10 days of the occurrence or death if an earlier report is not required by this paragraph.

(c) When the operator of a vessel cannot submit the casualty or accident report required by paragraph (a) of this section, the owner shall submit the casualty or accident report.

[CGD 72–54R, 37 FR 21399, Oct. 7, 1972, as amended by CGD 76–155, 44 FR 5308, Jan. 25, 1979; CGD 82–015, 54 FR 5610, Feb. 6, 1989]

§173.57 Casualty or accident report.

Each report required by §173.55 must be in writing, dated upon completion, and signed by the person who prepared it and must contain, if available, at least the following information about the casualty or accident:

(a) The numbers and names of each vessel involved.

(b) The name and address of each owner of each vessel involved.

(c) The name of the nearest city or town, the county, the State, and the body of water.

(d) The time and date the casualty or accident occurred.

(e) The location on the water.

(f) The visibility, weather, and water conditions.

(g) The estimated air and water temperatures.

(h) The name, address, age, or date of birth, telephone number, vessel operating experience, and boating safety training of the operator making the report.

(i) The name and address of each operator of each vessel involved.

(j) The number of persons on board or towed on skiis by each vessel.

(k) The name, address, and date of birth of each person injured or killed.

(l) The cause of each death.

(m) Weather forecasts available to, and weather reports used by, the operator before and during the use of the vessel.

(n) The name and address of each owner of property involved.

(o) The availability and use of personal flotation devices.

(p) The type and amount of each fire extinguisher used.

(q) The nature and extent of each injury.

(r) A description of all property damage and vessel damage with an estimate of the cost of all repairs.

(s) A description of each equipment failure that caused or contributed to the cause of the casualty.

(t) A description of the vessel casualty or accident.

(u) The type of vessel operation (cruising, drifting, fishing, hunting, skiing, racing, or other), and the type of accident (capsizing, sinking, fire, or explosion or other).

(v) The opinion of the person making the report as to the cause of the casualty, including whether or not alcohol or drugs, or both, was a cause or contributed to causing the casualty.

(w) The make, model, type (open, cabin, house, or other), beam width at widest point, length, depth from transom to keel, horsepower, propulsion (outboard, inboard, inboard outdrive, sail, or other), fuel (gas, diesel, or other), construction (wood, steel, aluminum, plastic, fiberglass, or other), and year built (model year), of the reporting operator's vessel.

(x) The name, address, and telephone number of each witness.

(y) The manufacturer's hull identification number, if any, of the reporting operator's vessel.

(z) The name, address, and telephone number of the person submitting the report.

[CGD 72–54R, 37 FR 21399, Oct. 7, 1972, as amended by CGD 84–099, 52 FR 47533, Dec. 14, 1987]

§ 173.59 Where to report.

A report required by § 173.55 must be submitted to:

(a) The reporting authority listed in Appendix A of this part where the vessel number was issued, or, if the vessel has no number, where the vessel is principally used; or

(b) The reporting authority where the casualty or accident occurred, if it occurred outside the State where the vessel is numbered or principally used.

Subpart D—Issue of Certificate of Number

§ 173.71 Application for certificate of number.

Any person who is the owner of a vessel to which § 173.11 applies may apply for a certificate of number for that vessel by submitting to the issuing authority, listed in Appendix A of this part, where the vessel will principally be used:

(a) An application on a form and in a manner prescribed by the issuing authority; and

(b) The fee required by the issuing authority.

§ 173.73 Duplicate certificate of number.

If a certificate of number is lost or destroyed, the person whose name appears on the certificate as the owner may apply for a duplicate certificate by submitting to the issuing authority that issued the certificate:

(a) An application on a form or in a manner prescribed by the issuing authority; and

(b) The fee required by the issuing authority, if any.

§ 173.75 Temporary certificate.

A temporary certificate valid for not more than 60 days after it is issued may be issued by an issuing authority pending the issue of a certificate of number. A temporary certificate is not valid after the date that the owner receives the certificate of number from the issuing authority.

§ 173.77 Validity of certificate of number.

(a) Except as provided in paragraphs (b), (c), (d), and (e) of this section, a certificate of number is valid until the date of expiration prescribed by the issuing authority.

(b) A certificate of number issued by an issuing authority is invalid after the date upon which:

(1) The vessel is documented or required to be documented under Part 67 of Title 46, Code of Federal Regulations;

(2) The person whose name appears on the certificate of number as owner of the vessel transfer all of his ownership in the vessel; or

(3) The vessel is destroyed or abandoned.

(c) A certificate of number issued by an issuing authority is invalid if:

(1) The application for the certificate of number contains a false or fraudulent statement; or

(2) The fees for the issuance of the certificate of number are not paid.

(d) A certificate of number is invalid 60 days after the day on which the vessel is no longer principally used in the State where the certificate was issued.

(e) The certificate of number is invalid when the person whose name appears on the certificate involuntarily loses his interest in the numbered vessel by legal process.

§ 173.79 Expiration of Coast Guard certificate of number.

A certificate of number issued by the Coast Guard expires 3 years from the date it is issued.

§ 173.81 Coast Guard forms for numbering and casualty reporting.

(a) In a State where the Coast Guard is the issuing authority, the following Coast Guard forms must be used:

(1) Each application for a certificate of number or renewal must be made on two-part Form CG–3876 and 3876A, Application for Number and Temporary Certificate.

(2) Each notification required by § 173.29(b) must be made on Form CG–2921, Notification of Change in Status of Vessel.

(3) Each notification required by § 173.29(a) must be made on Form CG–3920, Change of Address Notice.

(4) Each notification required by § 173.29(c) must be made in writing.

(5) Each application for a duplicate certificate of number must be made on two-part Form CG–3919 and CG–3919A, Application for Duplicate Certificate of Number and Temporary Duplicate Certificate.

(6) Each vessel casualty required to be reported by § 173.55 must be made on Form CG–3865.

(b) Each surrender of a certificate of number required by § 173.31 may be made in any form but must contain a written statement as to why the certificate is being surrendered.

§ 173.83 Availability of Coast Guard forms.

In a State where the Coast Guard is the issuing authority, forms required by § 173.81 are available at all manned Coast Guard shore units, except light and loran stations and except for Form CG–3865, at all first- and second-class and some third- and fourth-class post offices.

§ 173.85 Coast Guard fees.

(a) In a State where the Coast Guard is the issuing authority the fees for numbering are:

(1) Original number and two validation stickers—$6;

(2) Renewal of number and two validation stickers—$6;

(3) Duplicate certificate of number—$1; and

(4) Replacement of lost or destroyed validation sticker—$0.25 each.

(b) Fees must be paid by check or money order made payable to the ''U.S. Coast Guard,'' except when the application is made in person by the owner, the fee may be paid in cash.

APPENDIX A TO PART 173—ISSUING AUTHORITIES AND REPORTING AUTHORITIES

(a) The State is the issuing authority and reporting authority in:

STATE

Alabama—AL.
American Samoa—AS.
Arizona—AZ.
Arkansas—AR.
California—CF.
Colorado—CL.
Connecticut—CT.
Delaware—DL.
District of Columbia—DC.
Florida—FL.
Georgia—GA.
Guam—GM.
Hawaii—HA.
Idaho—ID.
Illinois—IL.
Indiana—IN.
Iowa—IA.
Kansas—KA.
Kentucky—KY.
Louisiana—LA.
Maine—ME.
Maryland—MD.
Massachusetts—MS.
Michigan—MC.
Minnesota—MN.
Mississippi—MI.
Missouri—MO.
Montana—MT.

Nebraska—NB.
Nevada—NV.
New Hampshire—NH.
New Jersey—NJ.
New Mexico—NM.
New York—NY.
North Carolina—NC.
North Dakota—ND.
Ohio—OH.
Oklahoma—OK.
Oregon—OR.
Pennsylvania—PA.
Puerto Rico—PR.
Rhode Island—RI.
South Carolina—SC.
South Dakota—SD.
Tennessee—TN.
Texas—TX.
Utah—UT.
Vermont—VT.
Virginia—VA.
Virgin Islands—VI.
Washington—WN.
West Virginia—WV.
Wisconsin—WS.
Wyoming—WY.

(b) The Coast Guard is the issuing authority and reporting authority in:

STATE

Alaska—AK.

(c) The abbreviations following the names of the State listed in paragraphs (a) and (b) are the two capital letters that must be used in the number format to denote the State of principal use as prescribed in §174.23 of this chapter.

[CGD 72–54R, 37 FR 21399, Oct. 7, 1972, as amended by CGD 76–076, 41 FR 23401, June 10, 1976; CGD 89–048, 54 FR 27002, June 27, 1989]

PART 174—STATE NUMBERING AND CASUALTY REPORTING SYSTEMS

Subpart A—General

Sec.
174.1 Applicability.
174.3 Definitions.
174.5 Requirements for approval.
174.7 Approval procedure.

Subpart B—Numbering System Requirements

174.11 Applicability of State numbering system.
174.13 Owner or operator requirements.
174.14 State numbering system optional sections.
174.15 Validation stickers.
174.17 Contents of application for certificate of number.
174.19 Contents of a certificate of number.
174.21 Contents of temporary certificate.
174.23 Form of number.
174.25 Size of certificate of number.
174.27 Duration of certificate of number.
174.29 Temporary certificate of number.
174.31 Terms and conditions for vessel numbering.

Subpart C—Casualty Reporting System Requirements

174.101 Applicability of State casualty reporting system.
174.103 Administration.
174.105 Owner or operator casualty reporting requirements.
174.106 State casualty reporting system optional sections.
174.107 Contents of casualty or accident report form.

Subpart D—State Reports

174.121 Forwarding of casualty or accident reports.
174.123 Annual report of numbered vessels.
174.125 Coast Guard address.

AUTHORITY: 46 U.S.C. 6101, 12302; 49 CFR 1.46.

SOURCE: CGD 72–54R, 37 FR 21402, Oct. 7, 1972, unless otherwise noted.

Subpart A—General

§174.1 Applicability.

This part establishes a standard numbering system for vessels and a uniform vessel casualty reporting system for vessels by prescribing requirements applicable to the States for the approval of State numbering systems.

§174.3 Definitions.

As used in this part:

Operator means the person who is in control or in charge of a vessel while it is in use.

Owner means a person who claims lawful possession of a vessel by virtue of legal title or equitable interest therein which entitles him to such possession.

Reporting authority means a State where a numbering system has been approved by the Coast Guard or the Coast Guard where a numbering system has not been approved. Reporting authorities are listed in Appendix A of Part 173 of this chapter.

[CGD 72–54R, 37 FR 21402, Oct. 7, 1972, as amended by CGD 96–026, 61 FR 33669, June 28, 1996; CGD 97–023, 62 FR 33365, June 19, 1997]

§174.5 Requirements for approval.

The Commandant approves a State numbering system if he finds, after examination of the information submitted by a State, that the State numbering system and vessel casualty reporting system meet the requirements

of this part, 46 U.S.C. 6102, and 46 U.S.C. Chapter 123.

[CGD 97–023, 62 FR 33365, June 19, 1997, as amended by USCG–1998–3799, 63 FR 35533, June 30, 1998]

§174.7 Approval procedure.

To obtain approval by the Commandant of a numbering system or of any revision to a numbering system, an authorized representative of the State must submit three copies of the State laws, regulations, forms, and policy statements, if any, that pertain to the numbering system or revision to Office of Boating Safety, 2100 Second Street SW., Washington, DC 20593–0001.

[CGD 72–54R, 37 FR 21402, Oct. 7, 1972, as amended by CGD 82–010, 48 FR 8273, Feb. 28, 1983; CGD 88–052, 53 FR 25122, July 1, 1988; CGD 96–026, 61 FR 33669, June 28, 1996]

Subpart B—Numbering System Requirements

§174.11 Applicability of State numbering system.

(a) Except as allowed in paragraph (c) of this section, a State numbering system must require the numbering of vessels to which §173.11 of this chapter applies.

(b) A State numbering system may require the numbering of any vessel subject to the jurisdiction of the State unless prohibited by the regulations in Part 173 of this chapter.

(c) A State numbering system may exempt from its numbering requirements any vessel or class of vessels to which §173.13 of this chapter applies.

§174.13 Owner or operator requirements.

A State numbering system must contain the requirements applicable to an owner or a person operating a vessel that are prescribed in the following sections of Part 173:

(a) Paragraph (a) of §173.15 *Vessel number required.*

(b) Section 173.19 *Other numbers prohibited.*

(c) Paragraph (a) of §173.21 *Certificate of number required.*

(d) Section 173.23 *Inspection of certificate.*

(e) Section 173.25 *Location of certificate of number.*

(f) Section 173.29 *Notification of issuing authority.*

(g) Section 173.71 *Application for certificate of number.*

(h) Section 173.73 *Duplicate certificate of number.*

(i) Section 173.77 *Validity of certificate of number.*

(46 U.S.C. 1451, 1467, 1488; 49 CFR 1.46(n)(1))

[CGD 77–117, 44 FR 42195, July 19, 1979]

§174.14 State numbering system optional sections.

In addition to the requirements in §174.13, a State numbering system may contain any of the other requirements applicable to a vessel owner or operator prescribed in Part 173.

(46 U.S.C. 1451, 1467, 1488; 49 CFR 1.46(n)(1))

[CGD 77–117, 44 FR 42195, July 19, 1979, as amended by USCG–1999–5832, 64 FR 34715, June 29, 1999]

§174.15 Validation stickers.

(a) If a State issues validation stickers, its numbering system must contain the requirements that stickers must be displayed within 6 inches of the number and the stickers must meet the requirements in paragraphs (b) and (c) of this section.

(b) Validation stickers must be approximately 3 inches square.

(c) The year in which each validation sticker expires must be indicated by the colors, blue, international orange, green, and red, in rotation beginning with blue for stickers that expire in 1973.

§174.17 Contents of application for certificate of number.

(a) Each form for application for a certificate of number must contain the following information:

(1) Name of the owner.

(2) Address of the owner, including ZIP code.

(3)–(4) [Reserved]

(5) State in which vessel is or will be principally used.

(6) The number previously issued by an issuing authority for the vessel, if any.

(7) Whether the application is for a new number, renewal of a number, or transfer of ownership.

(8) Whether the vessel is used for pleasure, rent or lease, dealer or manufacturer demonstration, commercial passenger carrying, commercial fishing, or other commercial use.

(9) Make of vessel.

(10) Year vessel was manufactured or model year.

(11) Manufacturer's hull identification number, if any.

(12) Overall length of vessel.

(13) Type of vessel (open, cabin, house, or other).

(14) Whether the hull is wood, steel, aluminum, fiberglass, plastic, or other.

(15) Whether the propulsion is inboard, outboard, inboard-outdrive, sail or other.

(16) Whether the fuel is gasoline, diesel, or other.

(17) The signature of the owner.

(b) An application made by a manufacturer or dealer for a number that is to be temporarily affixed to a vessel for demonstration or test purposes may omit items 9 through 16 of paragraph (a) of this section.

(c) An application made by a person who intends to lease or rent the vessel without propulsion machinery may omit items 15 and 16 of paragraph (a) of this section.

[CGD 79–087, 47 FR 8176, Feb. 25, 1982]

§ 174.19 Contents of a certificate of number.

(a) Except as allowed in paragraphs (b), (c), and (d) of this section, each certificate of number must contain the following information:

(1) Number issued to the vessel.

(2) Expiration date of the certificate.

(3) State of principal use.

(4) Name of the owner.

(5) Address of owner, including ZIP code.

(6) Whether the vessel is used for pleasure, rent or lease, dealer or manufacturer demonstration, commercial passenger carrying, commercial fishing or other commercial use.

(7) Manufacturer's hull identification number (if any).

(8) Make of vessel.

(9) Year vessel was manufactured.

(10) Overall length of vessel.

(11) Whether the vessel is an open boat, cabin cruiser, houseboat, or other type.

(12) Hull material.

(13) Whether the propulsion is inboard, outboard, inboard-outdrive, or sail.

(14) Whether the fuel is gasoline, diesel, or other.

(b) A certificate of number issued to a vessel that has a manufacturer's hull identification number assigned, may omit items 8 through 14 of paragraph (a) of this section if the manufacturer's hull identification number is plainly marked on the certificate.

(c) A certificate of number issued to a manufacturer or dealer to be used on a vessel for test or demonstration purposes may omit items 7 through 14 of paragraph (a) of this section if the word ''manufacturer'' or ''dealer'' is plainly marked on the certificate.

(d) A certificate of number issued to a vessel that is to be rented or leased without propulsion machinery may omit items 13 and 14 of paragraph (a) of this section if the words ''livery vessel'' are plainly marked on the certificate.

(e) An issuing authority may print on the certificate of number a quotation of the State regulations pertaining to change of ownership or address, documentation, loss, discovery of vessel, carriage of the certificate of number on board when the vessel is in use, rendering aid in a vessel accident, and reporting of vessel casualties and accidents.

(46 U.S.C. 1451, 1467, 1488; 49 CFR 1.46(n)(1))

[CGD 72–54R, 37 FR 21402, Oct. 7, 1972, as amended by CGD 77–117, 44 FR 42195, July 19, 1979; USCG–1999–5832, 64 FR 34715, June 29, 1999]

§ 174.21 Contents of temporary certificate.

A temporary certificate issued pending the issuance of a certificate of number must contain the following information:

(a) Make of vessel.

(b) Length of vessel.

(c) Type of propulsion.

(d) State in which vessel is principally used.

(e) Name of owner.

(f) Address of owner, including ZIP code.

(g) Signature of owner.

(h) Date of issuance.

(i) Notice to the owner that the temporary certificate is invalid after 60 days from the date of issuance.

§174.23 Form of number.

(a) Each number must consist of two capital letters denoting the State of the issuing authority, as specified in Appendix A of Part 173 of this chapter, followed by—

(1) Not more than four numerals followed by not more than two capital letters (example: NH 1234 BD); or

(2) Not more than three numerals followed by not more than three capital letters (example: WN 567 EFG).

(b) A number suffix must not include the letters ''I'', ''O'', or ''Q,'' which may be mistaken for numerals.

§174.25 Size of certificate of number.

Each certificate of number must be approximately 2½ by 3½ inches.

§174.27 Duration of certificate of number.

A certificate of number must not be valid for more than 3 years.

§174.29 Temporary certificate of number.

A State may issue a temporary certificate of number that is effective for not more than 60 days.

§174.31 Terms and conditions for vessel numbering.

A State numbering system may condition the issuance of a certificate of number on—

(a) Title to, or other proof of ownership of a vessel except a recreational-type public vessel of the United States; or

(b) The payment of State or local taxes, except for a recreational-type public vessel of the United States.

Subpart C—Casualty Reporting System Requirements

§174.101 Applicability of State casualty reporting system.

(a) A State casualty reporting system must require the reporting of vessel casualties and accidents involving vessels to which §173.51 of this chapter applies.

(b) The State casualty reporting system may also require vessel casualty or accident reports for property damage in amounts less than that required under §173.55 of this chapter.

(46 U.S.C. 1486; 49 CFR 1.46(n)(1))

[CGD 72–54R, 37 FR 21402, Oct. 7, 1972, as amended by CGD 76–155, 44 FR 5309, Mar. 25, 1979; CGD 82–015, 54 FR 5610, Feb. 6, 1989]

§174.103 Administration.

The State casualty reporting system must be administered by a State agency that—

(a) Will provide for the reporting of all casualties and accidents prescribed in §173.55 of this chapter;

(b) Receives reports of vessel casualties or accidents required in §174.101;

(c) Reviews each accident and casualty report to assure the accuracy and completeness of each report;

(d) Determines the cause of casualties and accidents reported based on information available and indicates the apparent cause on the casualty report or on an attached page;

(e) Notifies the Coast Guard, in writing, when a problem area in boating safety peculiar to the State is determined, together, with corrective measures instituted or recommended; and

(f) Reports on vessel numbering and vessel casualties and accidents as required in Subpart D of this part.

(46 U.S.C. 1486; 49 CFR 1.46(n)(1))

[CGD 72–54R, 37 FR 21402, Oct. 7, 1972, as amended by CGD 76–155, 44 FR 5309, Mar. 25, 1979]

§174.105 Owner or operator casualty reporting requirements.

A State casualty reporting system must contain the following requirements of Part 173 applicable to an owner or a person operating a vessel:

(a) Section 173.55 *Report of casualty or accident.*

(b) Section 173.57 *Casualty or accident report.*

(c) Section 173.59 *Where to report.*

(46 U.S.C. 1451, 1467, 1488; 49 CFR 1.46 (n)(1))

[CGD 77–117, 44 FR 42195, July 19, 1979]

§ 174.106 State casualty reporting system optional sections.

In addition to the requirements in § 174.105, a State casualty reporting system may contain any of the other requirements applicable to a vessel owner or operator prescribed in Part 173.

(46 U.S.C. 1451, 1467, 1488; 49 CFR 1.46 (n)(1))

[CGD 77–117, 44 FR 42195, July 19, 1979, as amended by USCG–1999–5832, 64 FR 34715, June 29, 1999]

§ 174.107 Contents of casualty or accident report form.

Each form for reporting a vessel casualty or accident must contain the information required in § 173.57 of this chapter.

Subpart D—State Reports

§ 174.121 Forwarding of casualty or accident reports.

Within 30 days of the receipt of a casualty or accident report, each State that has an approved numbering system must forward a copy of that report to the Commandant (G–OCC), U.S. Coast Guard, 2100 Second Street, SW., Washington, DC 20593–0001.

[USCG–1998–3799, 63 FR 35533, June 30, 1998]

§ 174.123 Annual report of numbered vessels.

Before March 1 of each year, each State that has an approved numbering system must prepare and submit Coast Guard Form CGHQ–3923, Report of Certificates of Number Issued to Boats, to the Coast Guard.

§ 174.125 Coast Guard address.

The report required by § 174.123 must be sent to the Office of Boating Safety, 2100 Second Street SW., Washington, DC 20593–0001.

[CGD 88–052, 53 FR 25122, July 1, 1988, as amended by CGD 96–026, 61 FR 33669, June 28, 1996]

PART 175—EQUIPMENT REQUIREMENTS

Subpart A—General

Sec.
175.1 Applicability.
175.3 Definitions.
175.5 Exemption from preemption.

Subpart B—Personal Flotation Devices

175.11 Applicability.
175.13 Definitions.
175.15 Personal flotation devices required.
175.17 Exemptions.
175.19 Stowage.
175.21 Condition; size and fit; approval marking.
175.23 Serviceable conditions.

Subpart C—Visual Distress Signals

175.101 Applicability.
175.105 Definitions.
175.110 Visual distress signals required.
175.113 Launchers.
175.115 Exceptions.
175.120 Stowage.
175.125 Serviceability.
175.128 Marking.
175.130 Visual distress signals accepted.
175.135 Existing equipment.
175.140 Prohibited use.

Subpart D—Ventilation

175.201 Ventilation.

AUTHORITY: 46 U.S.C. 4302; 49 CFR 1.46.

SOURCE: CGD 72–120R, 38 FR 8115, Mar. 28, 1973, unless otherwise noted.

Subpart A—General

§ 175.1 Applicability.

This part prescribes rules governing the use of boats on waters subject to the jurisdiction of the United States and on the high seas beyond the territorial seas for boats owned in the United States except:

(a) Foreign boats temporarily using waters subject to U.S. jurisdiction;

(b) Military or public boats of the United States, except recreational-type public vessels;

(c) A boat whose owner is a State or subdivision thereof, which is used principally for governmental purposes, and which is clearly identifiable as such;

(d) Ship's lifeboats.

(e) Seaplanes on the water.

[CGD 72–120R, 38 FR 8115, Mar. 28, 1973, as amended by CGD 92–045, 58 FR 41607, Aug. 4, 1993]

§ 175.3 Definitions.

As used in this part:

Boat means any vessel manufactured or used primarily for noncommercial use; leased, rented, or chartered to another for the latter's noncommercial use; or engaged in the carrying of six or fewer passengers.

Passenger means every person carried on board a vessel other than:

(1) The owner or his representative;

(2) The operator;

(3) Bona fide members of the crew engaged in the business of the vessel who have contributed no consideration for their carriage and who are paid for their services; or

(4) Any guest on board a vessel which is being used exclusively for pleasure purposes who has not contributed any consideration, directly or indirectly, for his carriage.

Racing shell, rowing scull, racing canoe, and racing kayak means a manually propelled vessel that is recognized by national or international racing associations for use in competitive racing and one in which all occupants row, scull, or paddle, with the exception of a coxswain, if one is provided, and is not designed to carry and does not carry any equipment not solely for competitive racing.

Recreational vessel means any vessel being manufactured or operated primarily for pleasure; or leased, rented, or chartered to another for the latter's pleasure. It does not include a vessel engaged in the carrying of six or fewer passengers.

Sailboard means a sail propelled vessel with no freeboard and equipped with a swivel mounted mast not secured to a hull by guys or stays.

Use means operate, navigate, or employ.

Vessel includes every description of watercraft used or capable of being used as a means of transportation on the water.

[CGD 92–045, 58 FR 41607, Aug. 4, 1993]

§175.5 Exemption from preemption.

The States are exempted from preemption by Federal regulations when establishing, continuing in effect, or enforcing State laws and regulations on the wearing or the carriage of personal flotation devices directly related to the following subject areas within the jurisdictional boundaries of the State:

(a) Children on board any vessel;

(b) Operating a canoe or kayak;

(c) Operating a sailboard; and

(d) Operating a personal watercraft.

[CGD 92–045, 58 FR 41608, Aug. 4, 1993]

Subpart B—Personal Flotation Devices

§175.11 Applicability.

This subpart applies to all recreational vessels that are propelled or controlled by machinery, sails, oars, paddles, poles, or another vessel.

[CGD 92–045, 58 FR 41608, Aug. 4, 1993]

§175.13 Definitions.

As used in this subpart:

(a) ''Personal flotation device'' means a device that is approved by the Commandant under 46 CFR Part 160.

(b) ''PFD'' means ''personal flotation device''.

§175.15 Personal flotation devices required.

Except as provided in §175.17:

(a) No person may use a recreational vessel unless at least one PFD of the following types is on board for each person:

(1) Type I PFD;

(2) Type II PFD; or

(3) Type III PFD.

(b) No person may use a recreational vessel 16 feet or more in length unless one Type IV PFD is on board in addition to the total number of PFD's required in paragraph (a) of this section.

[CGD 81–023, 55 FR 32034, Aug. 6, 1990, as amended by CGD 92–045, 58 FR 41608, Aug. 4, 1993]

§175.17 Exemptions.

(a) A Type V PFD may be carried in lieu of any PFD required under §175.15, provided:

(1) The approval label on the Type V PFD indicates that the device is approved:

(i) For the activity in which the vessel is being used; or

(ii) As a substitute for a PFD of the Type required on the vessel in use;

(2) The PFD is used in accordance with any requirements on the approval label; and

(3) The PFD is used in accordance with requirements in its owner's manual, if the approval label makes reference to such a manual.

(b) Canoes and kayaks 16 feet in length and over are exempted from the requirements for carriage of the additional Type IV PFD required under § 175.15(b).

(c) Racing shells, rowing sculls, racing canoes and racing kayaks are exempted from the requirements for carriage of any Type PFD required under § 175.15.

(d) Sailboards are exempted from the requirements for carriage of any Type PFD required under § 175.15.

(e) Vessels of the United States used by foreign competitors while practicing for or racing in competition are exempted from the carriage of any PFD required under § 175.15, provided the vessel carries one of the sponsoring foreign country's acceptable flotation devices for each foreign competitor on board.

[CGD 92–045, 58 FR 41608, Aug. 4, 1993; 58 FR 51576, Oct. 4, 1993, as amended by CGD 97–023, 62 FR 33365, June 19, 1997; USCG–1998–3799, 63 FR 35533, June 30, 1998]

§ 175.19 Stowage.

(a) No person may use a recreational boat unless each Type I, II, or III PFD required by § 175.15 of this part, or equivalent type allowed by §175.17 of this part, is readily accessible.

(b) No person may use a recreational boat unless each Type IV PFD required by § 175.15 of this part, or equivalent type allowed by §175.17 of this part, is immediately available.

[CGD 81–023, 55 FR 32034, Aug. 6, 1990]

§ 175.21 Condition; size and fit; approval marking.

No person may use a recreational boat unless each PFD required by § 175.15 of this part or allowed by § 175.17 of this part is:

(a) In serviceable condition as provided in § 175.23;

(b) Of an appropriate size and fit for the intended wearer, as marked on the approval label; and

(c) Legibly marked with its approval number, as specified in 46 CFR part 160.

[CGD 81–023, 55 FR 32034, Aug. 6, 1990, as amended by CGD93–055, 61 FR 13926, Mar. 28, 1996]

§ 175.23 Serviceable condition.

A PFD is considered to be in serviceable condition for purposes of § 175.21(a) only if the following conditions are met:

(a) No PFD may exhibit deterioration that could diminish the performance of the PFD, including—

(1) Metal or plastic hardware used to secure the PFD on the wearer that is broken, deformed, or weakened by corrosion;

(2) Webbings or straps used to secure the PFD on the wearer that are ripped, torn, or which have become separated from an attachment point on the PFD; or

(3) Any other rotted or deteriorated structural component that fails when tugged.

(b) In addition to meeting the requirements of paragraph (a) of this section, no inherently buoyant PFD, including the inherently buoyant components of a hybrid inflatable PFD, may exhibit—

(1) Rips, tears, or open seams in fabric or coatings, that are large enough to allow the loss of buoyant material;

(2) Buoyant material that has become hardened, non-resilient, permanently compressed, waterlogged, oil-soaked, or which shows evidence of fungus or mildew; or

(3) Loss of buoyant material or buoyant material that is not securely held in position.

(c) In addition to meeting the requirements of paragraph (a) of this section, an inflatable PFD, including the inflatable components of a hybrid inflatable PFD, must be equipped with—

(1) Except as provided in paragraph (d) of this section, a properly armed inflation mechanism, complete with a full inflation medium cartridge and all status indicators showing that the inflation mechanism is properly armed;

(2) Inflatable chambers that are all capable of holding air;

(3) Oral inflation tubes that are not blocked, detached, or broken;

(4) A manual inflation lanyard or lever that is not inaccessible, broken, or missing; and

(5) Inflator status indicators that are not broken or otherwise non-functional.

(d) The inflation system of an inflatable PFD need not be armed when the PFD is worn inflated and otherwise meets the requirements of paragraphs (a) and (c) of this section.

[CGD 93–055, 61 FR 13926, Mar. 28, 1996]

Subpart C—Visual Distress Signals

SOURCE: CGD 76–183, 44 FR 73024, Dec. 17, 1979, unless otherwise noted.

§175.101 Applicability.

This subpart applies to boats on the coastal waters of the United States and on the high seas beyond the territorial seas for boats owned in the United States.

[CGD 76–183, 44 FR 73024, Dec. 17, 1979, as amended by USCG–1998–3799, 63 FR 35534, June 30, 1998]

§175.105 Definitions.

(a) *Visual distress signal* means a device that is approved by the Commandant under 46 CFR Part 160 or certified by the manufacturer under 46 CFR Parts 160 and 161.

(b) *Coastal waters* means:

(1) The U.S. waters of the Great Lakes (Lake Erie, Huron, Michigan, Ontario, and Superior);

(2) The territorial seas of the United States; and

(3) Those waters directly connected to the Great Lakes and territorial seas (i.e., bays, sounds, harbors, rivers, inlets, etc.) where any entrance exceeds 2 nautical miles between opposite shorelines to the first point where the largest distance between shorelines narrows to 2 miles, as shown on the current edition of the appropriate National Ocean Service chart used for navigation. Shorelines of islands or points of land present within a waterway are considered when determining the distance between opposite shorelines.

[CGD 76–183, 44 FR 73024, Dec. 17, 1979, as amended by CGD 82–073, 49 FR 7119, Feb. 27, 1984; 49 FR 20815, May 17, 1984]

§175.110 Visual distress signals required.

(a) No person may use a boat 16 feet or more in length or any boat carrying six or less passengers unless visual distress signals selected from the list in §175.130 or the alternatives in §175.135, in the number required, are on board. Devices suitable for day use and devices suitable for night use, or devices suitable for both day and night use, must be carried.

(b) Between sunset and sunrise, no person may use a boat less than 16 feet in length unless visual distress signals suitable for night use, selected from the list in §175.130 or §175.135, in the number required, are on board.

§175.113 Launchers.

(a) When a visual distress signal carried to meet the requirements of §175.110 requires a launcher to activate, then a launcher approved under 46 CFR 160.028 must also be carried.

§175.115 Exceptions.

The following persons need not comply with §175.110; however, each must carry on board visual distress signals suitable for night use, selected from the list in §175.130 or §175.135, in the number required, between sunset and sunrise:

(a) A person competing in any organized marine parade, regatta, race, or similar event;

(b) A person using a manually propelled boat; or

(c) A person using a sailboat of completely open construction, not equipped with propulsion machinery, under 26′ in length.

§175.120 Stowage.

No person may use a boat unless the visual distress signals required by §175.110 are readily accessible.

[CGD 93–055, 61 FR 13926, Mar. 28, 1996, as amended by USCG–1999–5832, 64 FR 34715, June 29, 1999]

§175.125 Serviceability.

No person may use a boat unless each signal required by §175.110 is in serviceable condition and the service life of

the signal, if indicated by a date marked on the signal, has not expired.

[CGD 93–055, 61 FR 13926, Mar. 28, 1996, as amended by USCG–1999–5832, 64 FR 34715, June 29, 1999]

§ 175.128 Marking.

No person may use a boat unless each signal required by § 175.110 is legibly marked with the approval number or certification statement as specified in 46 CFR Parts 160 and 161.

[CGD 93–055, 61 FR 13926, Mar. 28, 1996, as amended by USCG–1999–5832, 64 FR 34715, June 29, 1999]

§ 175.130 Visual distress signals accepted.

(a) Any of the following signals, when carried in the number required, can be used to meet the requirements of § 175.110:

(1) An electric distress light meeting the standards of 46 CFR 161.013. One is required to meet the night only requirement.

(2) An orange flag meeting the standards of 46 CFR 160.072. One is required to meet the day only requirement.

(3) Pyrotechnics meeting the standards noted in Table 175.130.

(b) Any combination of signal devices selected from the types noted in paragraphs (a) (1), (2) and (3) of this section, when carried in the number required, may be used to meet both day and night requirements. *Examples*—the combination of two hand held red flares (160.021), and one parachute red flare (160.024 or 160.036) meets both day and night requirements. Three hand held orange smoke (160.037) with one electric distress light (161.013) meet both day and night requirements.

TABLE 175.130—PYROTECHNIC SIGNAL DEVICES

Approval number under 46 CFR	Device description	Meets requirement for	Number required
160.021	Hand Held Red Flare Distress Signals [3].	Day and Night	3
160.022	Floating Orange Smoke Distress Signals.	Day Only	3
160.024	Parachute Red Flare Distress Signals.	Day and Night [1]	3
160.036	Hand-Held Rocket-Propelled Parachute Red Flare Distress Signals.	Day and Night	3
160.037	Hand-Held Orange Smoke Distress Signals.	Day Only	3
160.057	Floating Orange Smoke Distress Signals.	Day Only	3
160.066	Distress Signal for Boats, Red Aerial Pyrotechnic Flare.	Day and Night [2]	3

[1] These signals require use in combination with a suitable launching device approved under 46 CFR 160.028.

[2] These devices may be either meteor or parachute assisted type. Some of these signals may require use in combination with a suitable launching device approved under 46 CFR 160.028.

[3] Must have manufacture date of 1 Oct. 1980 or later.

[CGD 81–038–A, 47 FR 24548, June 7, 1982]

§ 175.135 Existing equipment.

Launchers manufactured before 1 January, 1981, which do not have approval numbers are acceptable for use with meteor or parachute signals listed in Table 175.130 under § 175.130 as long as they remain in serviceable condition.

[CGD 76–183, 44 FR 73024, Dec. 17, 1979, as amended by CGD 81–038–A, 47 FR 24548, June 7, 1982; USCG–1998–3799, 63 FR 35534, June 30, 1998]

§ 175.140 Prohibited use.

No person in a boat shall display a visual distress signal on waters to which this subpart applies under any circumstance except a situation where assistance is needed because of immediate or potential danger to the persons on board.

Subpart D—Ventilation

§ 175.201 Ventilation.

No person may operate a boat built after July 31, 1980, that has a gasoline engine for electrical generation, mechanical power, or propulsion unless it

is equipped with an operable ventilation system that meets the requirements of 33 CFR 183.610 (a), (b), (d), (e), and (f) and 183.620(a).

[CGD 76–082, 44 FR 73027, Dec. 17, 1979]

PART 177—CORRECTION OF ESPECIALLY HAZARDOUS CONDITIONS

Sec.

177.01 Purpose and applicability.
177.03 Definitions.
177.04 Order of unsafe condition.
177.05 Action to correct an especially hazardous condition.
177.07 Other unsafe conditions.
177.08 Regulated boating areas.
177.09 Penalties.

AUTHORITY: 46 U.S.C. 4302, 4311; 49 CFR 1.45 and 1.46.

SOURCE: CGD 72–71R, 37 FR 13347, July 7, 1972, unless otherwise noted.

§177.01 Purpose and applicability.

This part prescribes rules to implement section 4308 of Title 46 United States Code which governs the correction of especially hazardous conditions on recreational vessels and uninspected passenger vessels on waters subject to the jurisdiction of the United States and, for a vessel owned in the United States, on the high seas, except operators of:

(a) Foreign boats temporarily using waters subject to United States jurisdiction;

(b) Military or public boats of the United States, except recreational-type public boats;

(c) A boat whose owner is a State or subdivision thereof, which is used principally for governmental purposes and which is clearly identifiable as such;

(d) Ship's lifeboats.

[CGD 72–71R, 37 FR 13347, July 7, 1972, as amended by CGD 84–099, 52 FR 47534, Dec. 14, 1987; CGD 84–099, 53 FR 13117, April 21, 1988]

§177.03 Definitions.

As used in this part:

(a) [Reserved]

(b) *Boat* means any vessel:

(1) Manufactured or used primarily for noncommercial use; or

(2) Leased, rented, or chartered to another for the latter's noncommercial use; or

(3) Engaged in the carrying of six or fewer passengers.

(c) *Coast Guard Boarding Officer* means a commissioned, warrant, or petty officer of the Coast Guard having authority to board any vessel under the Act of August 4, 1949, 63 Stat. 502, as amended (14 U.S.C. 89).

(d) *Operator* means the person who is in control or in charge of a boat while it is in use.

(e) *Use* means operate, navigate, or employ.

(f) *Vessel* includes every description of watercraft, other than a seaplane on the water, used or capable of being used as a means of transportation on the water.

[CGD 72–71R, 37 FR 13347, July 7, 1972, as amended by CDG 84–099, 52 FR 47534, Dec. 14, 1987]

§177.04 Order of unsafe condition.

(a) The Commandant has redelegated to Coast Guard District Commanders, with the reservation that this authority shall not be further redelegated, the authority, under 46 U.S.C. 4308, to issue orders applicable to a specific boat within the District Commander's jurisdiction designating that boat unsafe for a specific voyage on a specific body of water when it is determined, under the provisions of §177.07(g), that an unsafe condition exists.

(b) Each order issued by a Coast Guard District Commander under the provisions of paragraph (a) of this section will contain:

(1) Notice that the person upon whom the order is served has the right under the Administrative Procedure Act (5 U.S.C. 553(e)), to petition for reconsideration and repeal of the order;

(2) Full title and address of the Coast Guard District Commander to whom the petition is to be submitted; and

(3) Notice that the petition should contain:

(i) The text or substance of the order which the petitioner seeks to have reconsidered and repealed;

(ii) A statement of the action sought by the petitioner;

(iii) Whatever arguments or data that are available to the petitioner to support the action sought; and

(iv) An advisement that if the petitioner desires reconsideration and repeal of the rule before a specific date, the petition should so state and give reasons why action by that date is necessary.

(c) If a Coast Guard District Commander determines that a petition submitted under the provisions of paragraph (b) of this section contains adequate justification, the District Commander will initiate prompt action to repeal the order. If the District Commander determines that repeal of the order is not justified, the District Commander will issue prompt written notice of denial to the petitioner.

[CGD 95–057, 60 FR 34150, June 30, 1995]

§ 177.05 Action to correct an especially hazardous condition.

An operator of a boat who is directed by a Coast Guard Boarding Officer to take immediate and reasonable steps necessary for the safety of those aboard the vessel, under section 4308 of Title 46, United States Code, shall follow the direction of the Coast Guard Boarding Officer, which may include direction to:

(a) Correct the especially hazardous condition immediately;

(b) Proceed to a mooring, dock, or anchorage; or

(c) Suspend further use of the boat until the especially hazardous condition is corrected.

[CGD 72–71R, 37 FR 13347, July 7, 1972, as amended by CDG 84–099, 52 FR 47534, Dec. 14, 1987]

§ 177.07 Other unsafe conditions.

For the purpose of section 4308 of Title 46, United States Code, ''other unsafe condition'' means a boat:

(a) Does not display between sunset and sunrise the navigation lights prescribed by the International Regulations for Preventing Collisions at Sea, 1972 (72 COLREGS) or, when in use upon the inland waters of the United States, the Inland Navigational Rules Act of 1980 (Pub. L. 96–591), 94 Stat. 3415, 33 U.S.C. 2001, et seq.);

(b) That is operated by an individual who is apparently intoxicated, as defined in § 95.020 of this chapter, to the extent that, in the boarding officer's discretion, the continued operation of the vessel would create an unsafe condition.

(c) Has a fuel leakage from either the fuel system or engine, or has an accumulation of fuel in the bilges.

(d) Does not meet the applicable ventilation requirements for tanks and engine spaces prescribed by 46 CFR 25.40 (which applies to certain boats built before August 1, 1980), or Subpart K Ventilation, of 33 CFR Part 183 (which applies to boats built after July 31, 1980);

(e) Does not meet the requirements for backfire flame control prescribed by 46 CFR 25.35; or

(f) Is operated in a Regulated Boating Area as described in § 177.08 when:

(1) The wave height within the Regulated Boating Area is 4 feet or greater; or

(2) The wave height within the Regulated Boating Area is equal to or greater than the wave height determined by the formula

$$L/10+F=W$$

where:

L=Overall length of a boat measured in feet in a straight horizontal line along and parallel with the centerline between the intersections of this line with the vertical planes of the stem and stern profiles excluding deckhouses and equipment.

F=The minimum freeboard when measured in feet from the lowest point along the upper strake edge to the surface of the water.

W=Maximum wave height in feet to the nearest highest whole number; or

(3) The surface current is 4 knots or greater within the Regulated Boating Area.

(g) Designated manifestly unsafe for a specific voyage on a specific body of water due to:

(1) Unsuitable design or configuration, or

(2) Improper construction or inadequate material condition, or

(3) Improper or inadequate operational or safety equipment, and set forth in an order issued by a District Commander according to the provisions of § 177.04.

[CGD 72–71R, 37 FR 13347, July 7, 1972]

EDITORIAL NOTE: For FEDERAL REGISTER citations affecting §177.07, see the List of CFR Sections Affected in the Finding Aids section of this volume.

§177.08 Regulated boating areas.

For the purpose of this part, the following are regulated boating areas.

NOTE: Geographic coordinates expressed in terms of latitude or longitude, or both, are not intended for plotting on maps or charts whose referenced horizontal datum is the North American Datum of 1983 (NAD 83), unless such geographic coordinates are expressly labeled NAD 83. Geographic coordinates without the NAD 83 reference may be plotted on maps or charts referenced to NAD 83 only after application of the appropriate corrections that are published on the particular map or chart being used.

(a) *Quillayute River Entrance, Wash.* From the west end of James Island 47°54′ 23″ N., 124°39′ 05″ W. southward to buoy No. 2 at 47°53′ 42″ N., 124°38′ 42″ W. eastward to the shoreline at 47°53′ 42″ N., 124°37′ 51″ W., thence northward along the shoreline to 47°54′ 29″ N., 124°38′ 20″ W. thence northward to 47°54′ 36″ N., 124°38′ 22″ W. thence westward to the beginning.

(b) *Grays Harbor Entrance, Wash.* From a point on the shoreline at 46° 59′ 00″ N., 124°10′ 10″ W. westward to 46°59′ 00″ N., 124°15′ 30″ W. thence southward to 46°51′ 00″ N., 124°15′ 30″ W. thence eastward to a point on the shoreline at 46°51′ 00″ N., 124°06′ 40″ W. thence northward along the shoreline to a point at the south jetty 46°54′ 20″ N., 124°08′ 07″ W. thence eastward to 46°54′ 10″ N., 124°05′ 00″ W. thence northward to 46°55′ 00″ N., 124°03′ 30″ W. thence northwestward to Damon Point at 46°56′ 50″ N., 124°06′ 30″ W. thence westward along the north shoreline of the harbor to the north jetty at 46°55′ 40″ N., 124°10′ 27″ W. thence northward along the shoreline to the beginning.

(c) *Willapa Bay, Wash.* From a point on the shoreline at 46°46′ 00″ N., 124°05′ 40″ W. westward to 46°44′ 00″ N., 124°10′ 45″ W. thence eastward to a point on the shoreline at 46°35′ 00″ N., 124°03′ 45″ W. thence northward aling the shoreline around the north end of Leadbetter Point thence southward alone the east shoreline of Leadbetter Point to 46°36′ 00″ N., 124°02′ 15″ W. thence eastward to 46°36′ 00″ N., 124°00′ 00″ W. thence northward to Toke point at 46°42′ 15″ N., 123°58′ 00″ W. thence westward along the north shoreline of the harbor and northward along the seaward shoreline to the beginning.

(d) *Columbia River Bar, Wash.-Oreg.* From a point on the shoreline at 46°18′ 00″ N., 124°04′ 39″ W. thence westward to 46°18′ 00″ N., 124°09′ 30″ W. thence southward to 46°12′ 00″ N., 124°09′ 30″ W. thence eastward to a point on the shoreline at 46°12′ 00″ N., 123° 59′ 33″ W. thence eastward to Tansy Point Range Front Light at 46°11′ 16″ N., 123°55′ 05″ W.; thence northward to Chinook Point at 46°15′ 08″ N., 123°55′ 25″ W. thence northwestward to the north end of Sand Island at 46°17′ 29″ N., 124°01′ 25″ W. thence southwestward to a point on the north shoreline of the harbor at 46°16′ 25″ N., 124°02′ 28″ W. thence northwestward and southwestward along the north shoreline of the harbor and northward along the seaward shoreline to the beginning.

(e) *Nehalem River Bar, Oreg.* From a point on the shoreline 45°41′ 25″ N., 123°56′ 16″ W. thence westward 45°41′ 25″ N., 123°59′ 00″ W. thence southward to 45°37′ 25″ N., 123°59′ 00″ W. thence eastward to a point on the shoreline at 45°37′ 25″ N., 123°56′ 38″ W. thence northward along the shoreline to the north end of the south jetty at 45°39′ 40″ N., 123°55′ 45″ W. thence westward to a point on the shoreline at 45°39′ 45″ N., 123°56′ 19″ W. thence northward along the shoreline to the beginning.

(f) *Tillamook Bay Bar, Oreg.* From a point on the shoreline at 45°35′ 15″ N., 123°57′ 05″ W. thence westward 45°35′ 15″ N., 124°00′ 00″ W. thence southward to 45°30′ 00″ N., 124°00′ 00″ W. thence eastward to a point on the shoreline at 45°30′ 00″ N., 123°57′ 40″ W. thence northward along the shoreline to the north end of Kincheloe Point at 45°33′ 30″ N., 123°56′ 05″ W. thence northward to a point on the north shoreline of the harbor at 45°33′ 40″ N., 123°55′ 59″ W. thence westward along the north shoreline of the harbor then northward along the seaward shoreline to the beginning.

(g) *Netarts Bay Bar, Oreg.* From a point on the shoreline at 45°28′ 05″ N. thence westward to 45°28′ 05″ N., 124°00′ 00″ W. thence southward to 45°24′ 00″ N., 124°00′ 00″ W. thence eastward to a point on the shoreline at 45°24′ 00″ N., 123°57′ 45″ W. thence northward along the shoreline to 45°26′ 03″ N., 123°57′ 15″ W.

thence eastward to a point on the north shoreline of the harbor at 45°26′ 00″ N., 123°56′ 57″ W. thence northward along the shoreline to the beginning.

(h) *Siletz Bay Bar, Oreg.* From a point on the shoreline at 44°56′ 32″ N., 124°01′ 29″ W. thence westward to 44°56′ 32″ N., 124°03′ 00″ W. thence southward to 44°54′ 40″ N., 124°03′ 15″ W. thence eastward to a point on the shoreline at 44°54′ 40″ N., 124°01′ 55″ W. thence northward along the shoreline to 44°55′ 35″ N., 124°01′ 25″ W. thence northward to a point on the north shoreline of the harbor at 44°55′ 45″ N., 124°01′ 20″ W. thence westward and northward along the shoreline to the beginning.

(i) *Depoe Bay Bar, Oreg.* From a point on the shoreline at 44°49′ 15″ N., 124°04′ 00″ W. thence westward to 44°49′ 15″ N., 124°04′ 35″ W. thence southward to 44°47′ 55″ N., 124°04′ 55″ W. thence eastward to a point on the shoreline at 44°47′ 53″ N., 124°04′ 25″ W. thence northward along the shoreline and eastward along the south bank of the entrance channel to the highway bridge thence northward to the north bank at the bridge thence westward along the north bank of the entrance channel and northward along the seaward shoreline to the beginning.

(j) *Yaquina Bay Bar, Oreg.* From a point on the shoreline at 44°38′ 11″ N., 124°03′ 47″ W. thence westward to 44°38′ 11″ N., 124°05′ 55″ W. thence southward to 44°35′ 15″ N., 124°06′ 05″ W. thence eastward to a point on the shoreline at 44°35′ 15″ N., 124°04′ 02″ W. thence northward along the shoreline and eastward along the south bank of the entrance channel to the highway bridge thence northward to the north bank of the entrance channel at the bridge thence westward along the north bank of the entrance channel and northward along the seaway shoreline to the beginning.

(k) *Siuslaw River Bar, Oreg.* From a point on the shoreline at 44°02′ 00″ N., 124°08′ 00″ W. thence westward to 44°02′ 00″ N., 124°09′ 30″ W. thence southward to 44°00′ 00″ N., 124°09′ 30″ W. thence eastward to a point on the shoreline at 44°00′ 00″ N., 124°08′ 12″ W. thence northward along the shoreline and southward along the west bank of the entrance channel to 44°00′ 35″ N., 124°07′ 48″ W. thence southeastward to a point on the east bank of the entrance channel at 44°00′ 20″ N., 124°07′ 31″ W. thence northward along the east bank of the entrance channel and northward along the seaward shoreline to the beginning.

(l) *Umpqua River Bar, Oreg.* From a point on the shoreline at 43°41′ 20″ N., 124°11′ 58″ W. thence westward to 43°41′ 20″ N., 124°13′ 32″ W. thence southward to 43°38′ 35″ N., 124°14′ 25″ W. thence eastward to a point on the shoreline at 43°38′ 35″ N., 124°12′ 35″ W. thence northward along the shoreline to the north end of the training jetty at 43°40′ 15″ N., 124°11′ 45″ W. thence northward to a point on the west bank of the entrance channel at 43°40′ 40″ N., 124°11′ 41″ W. thence southwestward along the west bank of the entrance channel thence northward along the seaward shoreline to the beginning.

(m) *Coos Bay Bar, Oreg.* From a point on the shoreline at 43°22′ 15″ N., 124°19′ 34″ W. thence westward to 43°22′ 20″ N., 124°22′ 28″ W. thence southwestward to 43°21′ 00″ N., 124°23′ 35″ W. thence southeastward to a point on the shoreline at 43°20′ 25″ N., 124°22′ 28″ W. thence northward along the shoreline and eastward along the south shore of the entrance channel to a point on the shoreline at 43°20′ 52″ N., 124°19′ 12″ W. thence eastward to a point on the east shoreline of the harbor at 43°21′ 00″ N., 124°18′ 50″ W. thence northward to a point on the west shoreline of the harbor at 43°21′ 45″ N., 124°19′ 10″ W. thence south and west along the west shoreline of the harbor thence northward along the seaward shoreline to the beginning.

(n) *Coquille River Bar, Oreg.* From a point on the shoreline at 43°08′ 25″ N., 124°25′ 04″ W. thence southwestward to 43°07′ 50″ N., 124°27′ 05″ W. thence southwestward to 43°07′ 03″ N., 124°28′ 25″ W. thence eastward to a point on the shoreline at 43°06′ 00″ N., 124°25′ 55″ W. thence northward along the shoreline and eastward along the south shoreline of the channel entrance to 43°07′ 17″ N., 124°25′ 00″ W. thence northward to the east end of the north jetty at 43°07′ 24″ N., 124°24′ 59″ W. thence westward along the north shoreline of the entrance channel and northward along the seaward shoreline to the beginning.

(o) *Rogue River Bar, Oreg.* From a point on the shoreline at 42°26′ 25″ N., 124°26′ 03″ W. thence westward to 42°26′ 10″ N., 124°27′ 05″ W. thence southward to 42°24′ 15″ N., 124°27′ 05″ W. thence

eastward to a point on the shoreline at 42°24′ 15″ N., 124°25′ 30″ W. thence northward along the shoreline and eastward along the south shoreline of the entrance channel to the highway bridge thence northward across the inner harbor jetty to a point on the north shoreline of the entrance channel at the highway bridge thence westward along the north shoreline of the entrance channel thence northward along the seaward shoreline to the beginning.

(p) *Chetco River Bar, Oreg.* From a point on the shoreline at 42°02′ 35″ N., 124°17′ 20″ W. thence southeastward to 42°01′ 45″ N., 124°16′ 30″ W. thence northwestward to a point on the shoreline at 42°02′ 10″ N., 124°15′ 35″ W. thence northwestward along the shoreline thence northward along the east shoreline of the channel entrance to 42°02′ 47″ N., 124°16′ 03″ W. thence northward along the west face of the inner jetty and east shoreline of the channel entrance to the highway bridge thence westward to the west shoreline of the channel at the highway bridge thence southward along the west shoreline of the channel thence westward along the seaward shoreline to the beginning.

[CGD 73–41R, 39 FR 2583, Jan. 23, 1974, as amended by CGD 86–082, 52 FR 33812, Sept. 8, 1987]

§177.09 Penalties.

An operator of a vessel who does not follow the directions of a Coast Guard Boarding Officer prescribed in §177.05 is, in addition to any other penalty prescribed by law, subject to—

(a) The criminal penalties of 46 U.S.C. 4311, which provides that a person willfully operating a recreational vessel in violation of 46 U.S.C., Chapter 43 or regulations issued thereunder, shall be fined not more than $5,000, imprisoned for not more than one year, or both.

(b)(1) The civil penalties for violating 46 U.S.C. 4307(a)(1).

(2) The civil penalties of 46 U.S.C. 4311, which provides that a person violating any other provision of 43 U.S.C., Chapter 43 or regulation issued thereunder is liable to the United States Government for a civil penalty, and, if the violation involves the operation of a vessel, the vessel is liable in rem for the penalty.

[CGD 96–052, 62 FR 16703, Apr. 8, 1997

PART 179—DEFECT NOTIFICATION

Sec.
179.01 Purpose.
179.03 Definitions.
179.05 Manufacturer discovered defects.
179.07 Notice given by ''more expeditious means.''
179.09 Contents of notification.
179.11 Defects determined by the Commandant.
179.13 Initial report to the Commandant.
179.15 Follow-up report.
179.17 Penalties.
179.19 Address of the Commandant.

AUTHORITY: 43 U.S.C. 1333; 46 U.S.C. 4302, 4307, 4310, and 4311; 49 CFR 1.46.

SOURCE: CGD 72–55R, 37 FR 15776, Aug. 4, 1972, unless otherwise noted.

§179.01 Purpose.

This part prescribes rules to implement 46 U.S.C. 4310, governing the notification of defects in boats and associated equipment.

[CGD 93–055, 61 FR 13926, Mar. 28, 1996]

§179.03 Definitions.

Associated equipment as used in this part, means the following equipment as shipped, transferred, or sold from the place of manufacture and includes all attached parts and accessories:

(1) An inboard engine.

(2) An outboard engine.

(3) A stern drive unit.

(4) An inflatable personal flotation device approved under 46 CFR 160.076.

Boat means any vessel—

(1) Manufactured or used primarily for noncommercial use;

(2) Leased, rented, or chartered to another for the latter's noncommercial use; or

(3) Engaged in the carrying of six or fewer passengers.

Manufacturer means any person engaged in—

(1) The manufacture, construction, or assembly of boats or associated equipment;

(2) The manufacture or construction of components for boats and associated equipment to be sold for subsequent assembly; or

(3) The importation into the United States for sale of boats, associated equipment, or components thereof.

[CGD 93–055, 61 FR 13926, Mar. 28, 1996, as amended by USCG–1999–5832, 64 FR 34716, June 29, 1999]

§ 179.05 Manufacturer discovered defects.

Each manufacturer who is required to furnish a notice of a defect or failure to comply with a standard or regulation under 46 U.S.C. 4310(b), shall furnish that notice within 30 days after the manufacturer discovers or acquires information of the defect or failure to comply.

[CGD 93–055, 61 FR 13926, Mar. 28, 1996]

§ 179.07 Notice given by "more expeditious means".

Each manufacturer who gives notice by more expeditious means as provided for in 46 U.S.C. 4310(c)(1)(C), must give such notice in writing.

[CGD 93–055, 61 FR 13926, Mar. 28, 1996]

§ 179.09 Contents of notification.

Each notice required under 46 U.S.C. 4310(b) must include the following additional information:

(a) The name and address of the manufacturer.

(b) Identifying classifications including the make, model year, if appropriate, the inclusive dates (month and year) of the manufacture, or serial numbers and any other data necessary to describe the boats or associated equipment that may be affected.

[CGD 72–55R, 37 FR 15776, Aug. 4, 1972, as amended by CGD 93–055, 61 FR 13926, Mar. 28, 1996]

§ 179.11 Defects determined by the Commandant.

A manufacturer who is informed by the Commandant under 46 U.S.C. 4310(f) that a boat or associated equipment contains a defect relating to safety or failure to comply with a standard or regulation issued under the authority of 46 U.S.C. 4302, shall within 30 days of receipt of the information—

(a) Furnish the notification described in 46 U.S.C. 4310(d) to the persons designated in 46 U.S.C. 4310(c), or

(b) Provide information to the Commandant by certified mail stating why the manufacturer believes there is no defect relating to safety or failure of compliance.

[CGD 93–055, 61 FR 13926, Mar. 28, 1996]

§ 179.13 Initial report to the Commandant.

(a) When a manufacturer gives a notification required under 46 U.S.C. 4310, the manufacturer shall concurrently send to the Commandant by certified mail—

(1) A true or representative copy of each notice, bulletin, and other communication given to persons required to be notified under 46 U.S.C. 4310(c);

(2) The manufacturer's best estimate of the total number of boats or items of associated equipment potentially affected by the defect or failure to comply with a standard or regulation prescribed under 46 U.S.C. 4302; and

(3) If discovered or determined by the manufacturer, a chronology of all principal events upon which the determination is based.

(b) A manufacturer may submit an item required by paragraph (a) of this section that is not available at the time of submission to the Commandant when it becomes available if the manufacturer explains why it was not submitted within the time required and estimates when it will become available.

[CGD 72–55R, 37 FR 15776, Aug. 4, 1972, as amended by CGD 93–055, 61 FR 13926, Mar. 28, 1996]

§ 179.15 Follow-up report.

(a) Each manufacturer who makes an initial report required by § 179.13 shall submit a follow-up report to the Commandant by certified mail within 60 days after the initial report. The follow-up report must contain at least the following information:

(1) A positive identification of the initial report;

(2) The number of units in which the defect was discovered as of the date of the follow-up report;

(3) The number of units in which corrective action has been completed as of the date of the follow-up report;

(4) The number of first purchasers not notified because of an out-of-date name or address, or both; and

(5) An updating of the information required by §179.13.

(b) Each manufacturer shall submit any additional follow-up reports requested by the Commandant.

§179.17 Penalties.

Each manufacturer who fails to comply with a provision of 46 U.S.C. 4310 or the regulations in this part, is subject to the penalties as prescribed in 46 U.S.C. 4311.

[CGD 93–055, 61 FR 13926, Mar. 28, 1996]

§179.19 Address of the Commandant.

(a) Each report and communication sent to the Coast Guard and required by this part concerning boats and associated equipment other than inflatable personal flotation devices, must be submitted to Commandant (G–OPB–3), U.S. Coast Guard, 2100 Second St., SW., Washington, DC 20593–0001.

(b) Each report and communication sent to the Coast Guard and required by this part concerning inflatable personal flotation devices, must be submitted to Commandant (G–MSE–4), U.S. Coast Guard, 2100 Second St. SW., Washington, DC 20593–0001.

[CGD 93–055, 61 FR 13927, Mar. 28, 1996; CGD 96–026, 61 FR 36629, July 12, 1996]

PART 181—MANUFACTURER REQUIREMENTS

Subpart A—General

Sec.
181.1 Purpose and applicability.
181.3 Definitions.
181.4 Incorporation by reference.

Subpart B—Manufacturer Certification of Compliance

181.5 Purpose and applicability.
181.7 Compliance certification label required.
181.9 Affixing labels.
181.11 Exceptions to labeling requirement.
181.13 Removal of labels.
181.15 Contents of labels.
181.17 Label numbers and letters.
181.19 Construction of labels.

Subpart C—Identification of Boats

181.21 Purpose, applicability and effective dates.
181.23 Hull identification numbers required.
181.25 Hull identification number format.
181.27 Information displayed near hull identification number.
181.29 Hull identification number display.
181.31 Manufacturer identification code assignment.
181.33 Conditions for use of manufacturer identification codes.
181.35 Removal of numbers.

Subparts D–F [Reserved]

Subpart G—Instruction Pamphlet for Personal Flotation Devices

181.701 Applicability.
181.702 Information pamphlet: requirement to furnish.
181.703 Information pamphlet: Contents.
181.704 Contents of information pamphlet: Recreational hybrid PFD.
181.705 Contents of information pamphlet: Recreational inflatable PFD.

AUTHORITY: 46 U.S.C. 4302 and 4310; 49 CFR 1.46.

SOURCE: CGD 72–60, 37 FR 15779, Aug. 4, 1972, unless otherwise noted.

Subpart A—General

§181.1 Purpose and applicability.

This part prescribes requirements for the certification of boats and associated equipment and identification of boats to which 46 U.S.C. Chapter 43 applies.

[CGD 85–002, 51 FR 37573, Oct. 23, 1986]

§181.3 Definitions.

As used in this part:

Associated equipment means:

(1) Any system, part, or component of a boat as originally manufactured or any similar part or component manufactured or sold for replacement, repair, or improvement of such system, part, or component;

(2) Any accessory or equipment for, or appurtenance to, a boat; and

(3) Any marine safety article, accessory, or equipment intended for use by a person on board a boat; but

(4) Excluding radio equipment.

Boat means any vessel manufactured or used primarily for noncommercial use; leased, or rented, or chartered to another for the latter's noncommercial use; or engaged in the carrying of six or fewer passengers.

Date of certification means the date on which a boat or item of associated

equipment is certified to comply with all applicable U.S. Coast Guard safety standards in effect on that date.

Date of manufacture means the month and year during which construction or assembly of a boat or item of associated equipment begins.

Manufacturer means any person engaged in:

(1) The manufacture, construction, or assembly of boats or associated equipment; or

(2) The importation into the United States for sale of boats, associated equipment, or components thereof.

Model year means the period beginning August 1 of any year and ending on July 31 of the following year. Each model year is designated by the year in which it ends.

Private label merchandiser means any person engaged in the business of selling and distributing, under his own trade name, boats, or items of associated equipment manufactured by another.

[CGD 96–026, 61 FR 33669, June 28, 1996; 61 FR 36786, July 12, 1996]

§ 181.4 Incorporation by reference.

(a) Certain materials are incorporated by reference into this part with the approval of the Director of the Federal Register in accordance with 5 U.S.C. 552(a). To enforce any edition other than the one listed in paragraph (b) of this section, notice of change must be published in the FEDERAL REGISTER and the material made available to the public. All approved material is on file at the Office of the Federal Register, 800 North Capitol Street, NW., suite 700, Washington, DC, and at the Lifesaving and Fire Safety Standards Division (G–MSE–4), 2100 Second Street, SW., Washington, DC 20593–0001, and is available from the sources listed in paragraph (b) of this section.

(b) The materials approved for incorporation by reference in this part, and the sections affected are:

Underwriters Laboratories, Inc.

333 Pfingsten Road, Northbrook, IL 60062.
UL 1123, Marine Buoyant Devices, 181.703.
February 17, 1995.

[CGD 81–023, 55 FR 32034, Aug. 6, 1990, as amended by CGD 93–055, 61 FR 13927, Mar. 28, 1996; CGD 96–026, 61 FR 33669, June 28, 1996]

Subpart B—Manufacturer Certification of Compliance

§ 181.5 Purpose and applicability.

This subpart prescribes requirements for the certification of boats and associated equipment to which 46 U.S.C. Chapter 43 applies and to which a safety standard prescribed in Part 183 of this chapter applies.

[CGD 85–002, 51 FR 37573, Oct. 23, 1986]

§ 181.7 Compliance certification label required.

Unless there is affixed to it a certification label that contains the information required by § 181.15:

(a) No person who manufactures, constructs, or assembles a boat or associated equipment may deliver that boat or equipment for the purpose of sale;

(b) No person may import into the United States any boat or associated equipment; and

(c) No person engaged in the business of selling or distributing boats or associated equipment may sell or offer for sale any boat or associated equipment.

§ 181.9 Affixing labels.

(a) Each manufacturer of a boat or item of associated equipment to which a standard or regulation prescribed in Part 183 of this chapter applies shall affix a certification label that contains the information required by § 181.15 to that boat or equipment before it:

(1) Leaves the place of manufacture for the purpose of sale; or

(2) Is imported.

(b) The manufacturer of a boat or item of associated equipment that is sold to a private label merchandiser may, at the option of the private label merchandiser, affix a certification label identifying the private label merchandiser as the manufacturer before the boat or item of associated equipment leaves the place of manufacture.

§ 181.11 Exceptions to labeling requirement.

(a) This part does not apply to boats or associated equipment intended solely for export, and so labeled, tagged, or marked on the boat or equipment and on the outside of the container, if any, which is exported.

(b) If an item of associated equipment is so small that a certification label that meets the requirements in §181.15 cannot be affixed to it, a certification label that contains the information required by §181.15 may be printed on the smallest container in which the item is packed or on a slip packed with the item.

(c) This subpart does not apply to any outboard motor or starting control to which §183.710 of this chapter applies.

[CGD 72–60, 37 FR 15779, Aug. 4, 1972, as amended by CGD 79–137, 46 FR 3515, Jan. 15, 1981; 46 FR 9579, Jan. 29, 1981]

§181.13 Removal of labels.

No person may remove a label required by this part or remove or alter any information on a label required by this part, unless authorized by the Commandant.

§181.15 Contents of labels.

(a) Each label required by §181.7 must contain:

(1) The name and address of the manufacturer or private label merchandiser who certifies that the boat or item of associated equipment complies with the standards prescribed in Part 183 of this subchapter; and

(2) Except as provided in paragraph (c) of this section, the words:

(i) ''This (insert 'Boat' or 'Equipment') Complies With U.S. Coast Guard Safety Standards In Effect On (insert date of certification as prescribed in paragraph (b) of this section)''; or

(ii) If the item being certified is a boat, the label may show the words, ''This Boat Complies With U.S. Coast Guard Safety Standards In Effect On The Date of Certification.''

(b) Date of certification must be no earlier than the date on which construction or assembly began and no later than the date on which the boat or item of associated equipment leaves the place of manufacture or assembly or import for the purposes of sale.

(c) [Reserved]

(d) Except as provided in paragraph (e) of this section, the manufacturer may, in addition to the information required by paragraphs (a) and (b) of this section, display on the certification label any or all of the following information:

(1) Model name or designation.

(2) Hull identification number (if a boat) or serial number (if an item of associated equipment).

(3) Model year.

(e) Display of the hull identification number on the certification label does not satisfy the display requirements of §181.29.

(f) Each boat which displays a maximum horsepower capacity determined in accordance with §183.53(b) must, in addition to the information required by paragraphs (a), (b) and (d) of this section, display on the certification label, the following statement in letters no less than one-quarter of an inch in height:

THIS BOAT IS INTENDED FOR RACING AND OTHER HIGH PERFORMANCE ACTIVITIES. THE SKILL REQUIRED MAY EXCEED THE ABILITIES OF SOME OPERATORS.

[CGD 72–60, 37 FR 15779, Aug. 4, 1972, as amended by CGD 83–012, 49 FR 39327, Oct. 5, 1984; CGD 85–002, 51 FR 37573, Oct. 23, 1986; USCG–1999–5832, 64 FR 34716, June 29, 1999]

§181.17 Label numbers and letters.

Letters and numbers on each label must:

(a) Be no less than one-eighth of an inch in height; and

(b) Contrast with the basic color of the label, except that the date of certification may be permanently stamped, engraved, or embossed on the label.

§181.19 Construction of labels.

(a) Each label must be made of material that can withstand exposure to water, oil, salt spray, direct sunlight, heat, cold, and wear expected in normal use of the boat or item of associated equipment without deterioration of legibility.

(b) Each label must be made of material that shows visible traces of the alteration or removal of information on the label.

Subpart C—Identification of Boats

SOURCE: CGD 79–013, 48 FR 40718, Sept. 9, 1983, unless otherwise noted.

§ 181.21 Purpose, applicability and effective dates.

This subpart prescribes the requirements for identification of boats to which section 46 U.S.C. 4301 applies.

[CGD 79–013, 48 FR 40718, Sept. 9, 1983, as amended by USCG–1998–3799, 63 FR 35534, June 30, 1998; USCG–1999–5832, 64 FR 34716, June 29, 1999]

§ 181.23 Hull identification numbers required.

(a) A manufacturer (or importer), as defined in § 181.3 of this part, must identify each boat produced or imported with two hull identification numbers that meet the requirements of this subpart:

(1) A primary hull identification number affixed in accordance with §§ 181.29(a) and (c) of this subpart; and

(2) A duplicate hull identification number affixed in accordance with §§ 181.29(b) and (c) of this subpart.

(b) A person who builds or imports a boat for his or her own use and not for the purposes of sale, must identify that boat with two hull identification numbers that meet the requirements of this subpart.

(c) No person may assign the same hull identification number to more than one boat.

§ 181.25 Hull identification number format.

Each of the hull identification numbers required by § 181.23 must consist of twelve characters, uninterrupted by slashes, hyphens, or spaces, as follows:

(a) The first three characters must be a manufacturer identification code assigned under § 181.31(a) or the importer designation assigned under § 181.31(b).

(b) Characters four through eight must be a serial number assigned by the manufacturer in letters of the English alphabet, or Arabic numerals, or both, except the letters I, O, and Q.

(c) Characters nine and ten must indicate the month and year of certification when a date of certification is required. In all other cases characters nine and ten must indicate the date of manufacture. The date indicated can be no earlier than the date construction or assembly began and no later than the date the boat leaves the place of manufacture or assembly or is imported into the United States for the purposes of sale. Character nine must be indicated using letters of the English alphabet. The first month of the year, January, must be designated by the letter ''A'', the second month, February, by the letter ''B'', and so on until the last month of the year, December. Character ten must be the last digit of the year of manufacture or certification and must be an Arabic numeral.

(d) Characters eleven and twelve must indicate the model year using Arabic numerals for the last two numbers of the model year such as ''82'' for 1982 and ''83'' for 1983.

§ 181.27 Information displayed near hull identification number.

If additional information is displayed on the boat within two inches of the hull identification number, that information must be separated from the hull identification number by means of borders or must be on a separate label so that it will not be interpreted as part of the hull identification number.

§ 181.29 Hull identification number display.

Two identical hull identification numbers are required to be displayed on each boat hull.

(a) The primary hull identification number must be affixed—

(1) On boats with transoms, to the starboard outboard side of the transom within two inches of the top of the transom, gunwale, or hull/deck joint, whichever is lowest.

(2) On boats without transoms or on boats on which it would be impractical to use the transom, to the starboard outboard side of the hull, aft, within one foot of the stern and within two inches of the top of the hull side, gunwale or hull/deck joint, whichever is lowest.

(3) On catamarans and pontoon boats which have readily replaceable hulls, to the aft crossbeam within one foot of the starboard hull attachment.

(4) If the hull identification number would not be visible, because of rails, fittings, or other accessories, the number must be affixed as near as possible to the location specified in paragraph (a) of this section.

(b) The duplicate hull identification number must be affixed in an unexposed location on the interior of the boat or beneath a fitting or item of hardware.

(c) Each hull identification number must be carved, burned, stamped, embossed, molded, bonded, or otherwise permanently affixed to the boat so that alteration, removal, or replacement would be obvious. If the number is on a separate plate, the plate must be fastened in such a manner that its removal would normally cause some scarring of or damage to the surrounding hull area. A hull identification number must not be attached to parts of the boat that are removable.

(d) The characters of each hull identification number must be no less than one-fourth of an inch high.

[CGD 79–013, 48 FR 40718, Sept. 19, 1983; 48 FR 53558, Nov. 28, 1983]

§ 181.31 Manufacturer identification code assignment.

(a) Each person required by § 181.23 to affix hull identifications numbers must request a manufacturer identification code in writing from the Recreational Boating Product Assurance Division, 2100 Second Street SW., Washington, DC 20593–0001. The request must indicate the manufacturer's name and U.S. address along with the general types and lengths of boats that will be manufactured.

(b) For boats manufactured outside of the jurisdiction of the United States, a U.S. importer must obtain a manufacturer identification code as required by paragraph (a) of this section. The request of an importer, as defined in § 181.3 of this subpart, must indicate the importer's name and U.S. address along with a list of the manufacturers, their addresses, and the general types and sizes of boats that will be imported. If a nation has a hull identification number system which has been accepted by the U.S. Coast Guard for the purpose of importing boats, it may be used by the importer instead of the one specified within this subpart. To request a list of those nations having such a numbering system, write to the Recreational Boating Product Assurance Division, 2100 Second Street SW., Washington, DC 20593–0001.

(c) Persons who are required to identify boats under § 181.23(b) must obtain the required hull identification number from the State Boating Law Administrator of the State where the boat will be principally used, or, if the State Boating Law Administrator does not assign these numbers, from the Coast Guard District office in the area of principal use.

[CGD 79–013, 48 FR 40718, Sept. 9, 1983, as amended by CGD 88–052, 53 FR 25122, July 1, 1988; CGD 96–026, 61 FR 33669, June 28, 1996]

§ 181.33 Conditions for use of manufacturer identification codes.

(a) No manufacturer or importer may sell or transfer a manufacturer identification code or use a manufacturer identification code that has been assigned to another.

(b) A manufacturer or importer who changes the business name or address must advise the Recreational Boating Product Assurance Division, 2100 Second Street SW., Washington, DC 20593–0001 of the change in writing.

[CGD 79–013, 48 FR 40718, Sept. 9, 1983, as amended by CGD 88–052, 53 FR 25122, July 1, 1988; CGD 96–026, 61 FR 33669, June 28, 1996]

§ 181.35 Removal of numbers.

No person may remove or alter a number required by this subpart unless authorized by the Commandant, U.S. Coast Guard.

Subparts D–F [Reserved]

Subpart G—Instruction Pamphlet for Personal Flotation Devices

SOURCE: CGD 75–008a, 43 FR 9767, Mar. 9, 1978, unless otherwise noted.

§ 181.701 Applicability.

This subpart applies to all personal flotation devices that are sold or offered for sale for use on recreational boats.

§ 181.702 Information pamphlet: requirement to furnish.

(a) Each manufacturer of a Type I, II, III, IV, or V personal flotation device (PFD) must furnish with each PFD that is sold or offered for sale for use on a recreational boat, an information

pamphlet meeting the requirements of § 181.703, § 181.704, or § 181.705 of this subpart, as appropriate.

(b) No person may sell or offer for sale for use on a recreational boat, a Type I, II, III, IV, or V PFD unless an information pamphlet required by this section is attached in such a way that it can be read prior to purchase.

[CGD 93–055, 61 FR 13927, Mar. 28, 1996]

§ 181.703 Information pamphlet: Contents.

Unless otherwise specified in this subpart, each information pamphlet must contain the information specified in sections 33, 34 and 35 of UL 1123.

[CGD 93–055, 61 FR 13927, Mar. 28, 1996]

§ 181.704 Contents of information pamphlet: Recreational hybrid PFD.

Each information pamphlet for a recreational hybrid PFD approved under 46 CFR 160.077 must contain the information specified in 46 CFR 160.077–27.

[CGD 93–055, 61 FR 13927, Mar. 28, 1996]

§ 181.705 Contents of information pamphlet: Recreational inflatable PFD.

Each information pamphlet for a recreational inflatable PFD approved under 46 CFR 160.076 must contain the information required by 46 CFR 160.076–35.

[CGD 93–055, 61 FR 13927, Mar. 28, 1996]

PART 183—BOATS AND ASSOCIATED EQUIPMENT

Subpart A—General

Sec.
183.1 Purpose and applicability.
183.3 Definitions.
183.5 Incorporation by reference.

Subpart B—Display of Capacity Information

183.21 Applicability.
183.23 Capacity marking required.
183.25 Display of markings.
183.27 Construction of markings.

Subpart C—Safe Loading

183.31 Applicability.
183.33 Maximum weight capacity: Inboard and inboard-outdrive boats.
183.35 Maximum weight capacity: Outboard boats.
183.37 Maximum weight capacity: Boats rated for manual propulsion and boats rated for outboard motors of 2 horsepower or less.
183.39 Persons capacity: Inboard and inboard-outdrive boats.
183.41 Persons capacity: Outboard boats.
183.43 Persons capacity: Boats rated for manual propulsion and boats rated for outboard motors of 2 horsepower or less.

Subpart D—Safe Powering

183.51 Applicability.
183.53 Horsepower capacity.

Subpart E [Reserved]

Subpart F—Flotation Requirements for Inboard Boats, Inboard/Outdrive Boats, and Airboats

183.101 Applicability.
183.105 Quantity of flotation required.
183.110 Definitions.
183.112 Flotation material and air chambers.
183.114 Test of flotation materials.

Subpart G—Flotation Requirements for Outboard Boats Rated for Engines of More Than 2 Horsepower

GENERAL

183.201 Applicability.
183.202 Flotation and certification requirements.
183.205 Passenger carrying area.
183.210 Reference areas.
183.215 Reference depth.
183.220 Preconditioning for tests.
183.222 Flotation material and air chambers.

TESTS

183.225 Flotation test for persons capacity.
183.230 Stability test.
183.235 Level flotation test without weights for persons capacity.

Subpart H—Flotation Requirements for Outboard Boats Rated for Engines of 2 Horsepower or Less

GENERAL

183.301 Applicability.
183.302 Flotation requirements.
183.305 Passenger carrying area.
183.310 Reference areas.
183.315 Reference depth.
183.320 Preconditioning for tests.
183.322 Flotation materials.

TESTS

183.325 Flotation test for persons capacity.
183.330 Stability test.
183.335 Level flotation test without weights for persons capacity.
TABLE
FIGURES

Subpart I—Electrical Systems

GENERAL

183.401 Purpose, applicability, and effective dates.
183.402 Definitions.
183.405 General.

MANUFACTURER REQUIREMENTS

183.410 Ignition protection.
183.415 Grounding.
183.420 Batteries.
183.425 Conductors: General.
183.430 Conductors in circuits of less than 50 volts.
183.435 Conductors in circuits of 50 volts or more.
183.440 Secondary circuits of ignition systems.
183.445 Conductors: Protection.
183.455 Overcurrent protection: General.
183.460 Overcurrent protection: Special applications.

Subpart J—Fuel Systems

GENERAL

183.501 Applicability.
183.505 Definitions.
183.507 General.

EQUIPMENT STANDARDS

183.510 Fuel tanks.
183.512 Fuel tanks: Prohibited materials.
183.514 Fuel tanks: Labels.
183.516 Cellular plastic used to encase fuel tanks.
183.518 Fuel tank openings.
183.520 Fuel tank vent systems.
183.524 Fuel pumps.
183.526 Carburetors.
183.528 Fuel stop valves.
183.530 Spud, pipe, and hose fitting configuration.
183.532 Clips, straps, and hose clamps.
183.534 Fuel filters and strainers.
183.536 Seals and gaskets in fuel filters and strainers.
183.538 Metallic fuel line materials.
183.540 Hoses: Standards and markings.
183.542 Fuel systems.

MANUFACTURER REQUIREMENTS

183.550 Fuel tanks: Installation.
183.552 Plastic encased fuel tanks: Installation.
183.554 Fittings, joints, and connections.
183.556 Plug and fittings.
183.558 Hoses and connections.
183.560 Hose clamps: Installation.
183.562 Metallic fuel lines.
183.564 Fuel tank fill system.
183.566 Fuel pumps: Placement.
183.568 Anti-siphon protection.
183.570 Fuel filters and strainers: Installation.
183.572 Grounding.

TESTS

183.580 Static pressure test for fuel tanks.
183.584 Shock test.
183.586 Pressure impluse test.
183.588 Slosh test.
183.590 Fire test.

Subpart K—Ventilation

183.601 Applicability.
183.605 Definitions.
183.607 Incorporation by reference.
183.610 Powered ventilation system.
183.620 Natural ventilation system.
183.630 Standards for natural ventilation.

Subpart L—Start-in-Gear Protection

183.701 Applicability.
183.705 Definitions.
183.710 Start-in-gear protection required.
183.715 Exception.

Subpart M–N [Reserved]

AUTHORITY: 46 U.S.C. 4302; 49 CFR 1.46.

SOURCE: CGD 72–61R, 37 FR 15782, Aug. 4, 1972, unless otherwise noted.

Subpart A—General

§183.1 Purpose and applicability.

This part prescribes standards and regulations for boats and associated equipment to which 46 U.S.C. Chapter 43 applies and to which certification requirements in Part 181 of this subchapter apply.

[CGD 85–098, 52 FR 19728, May 27, 1987]

§183.3 Definitions.

Beam means the transverse distance between the outer sides of the boat excluding handles, and other similar fittings, attachments, and extensions.

Boat means any vessel manufactured or used primarily for noncommercial use; leased, rented, or chartered to another for the latter's noncommercial use; or engaged in the carrying of six or fewer passengers.

Full transom means a transom with a maximum width which exceeds one-half the maximum beam of the boat.

Length means the straight line horizontal measurement of the overall length from the foremost part of the boat to the aftermost part of the boat, measured from end to end over the deck excluding sheer, and measured parallel to the centerline. Bow sprits, bumpkins, rudders, outboard motor brackets, handles, and other similar fittings, attachments, and extensions are not included in the measurement.

Monohull boat means a boat on which the line of intersection of the water surface and the boat at any operating draft forms a single closed curve. For example, a catamaran, trimaran, or a pontoon boat is not a monohull boat.

Motorwell means any arrangement of bulkheads or structures that prevents water from entering the passenger carrying area of the boat through any cutout area in the transom for mounting an outboard motor.

Motorwell height means the vertical distance from the lowest point of water ingress along the top of the motorwell to a line representing a longitudinal extension of the centerline of the boat's bottom surface, excluding keels. This distance is measured as a projection on the centerline plane of the boat. See Figure 183.3.

Permanent appurtenances means equipment that is mounted or fastened, so that it is not removable without the use of tools. Seats, inboard engines, windshields, helm stations, or hardtops are permanent appurtenances. Outboard motors, controls, batteries, and portable fuel tanks are not permanent appurtenances.

Remote steering means any mechanical assist device which is rigidly attached to the boat and used in steering the vessel, including but not limited to mechanical, hydraulic, or electrical control systems.

Sailboat means a boat designed or intended to use sails as the primary means of propulsion.

Sheer means the topmost line in a boat's side. The sheer intersects the vertical centerline plane of the boat at the forward end and intersects the transom (stern) at the aft end. For the purposes of this definition, the topmost line in a boat's side is the line defined by a series of points of contact with the boat structure, by straight lines at 45 degree angles to the horizontal and contained in a vertical plane normal to the outside edge of the boat as seen from above and which are brought into contact with the outside of the horizontal boat. A boat is horizontal when it is transversely level and when the lowest points at 40 percent and 75 percent of the boat's length behind the most forward point of the boat are level.

Transom means the surface at the stern of a boat projecting or facing aft. The upper boundary of the transom is the line defined by a series of points of contact, with the boat structure, by straight lines at 45 degree angles to the horizontal and contained in a vertical longitudinal plane and which are brought into contact with the stern of the horizontal boat. A boat is horizontal when it is transversely level and when the lowest points at 40 percent and 75 percent of the boat's length behind the most forward point of the boat are level.

Transom height means the vertical distance from the lowest point of water ingress along the top of the transom to a line representing a longitudinal extension of the centerline of the boat's bottom surface, excluding keels. This distance is measured as a projection on the centerline plane of the boat. See Figure 183.3.

Vessel includes every description of watercraft, other than a seaplane on the water, used or capable of being used as a means of transportation on the water.

Figure 183.3.—Transom and Motorwell Height

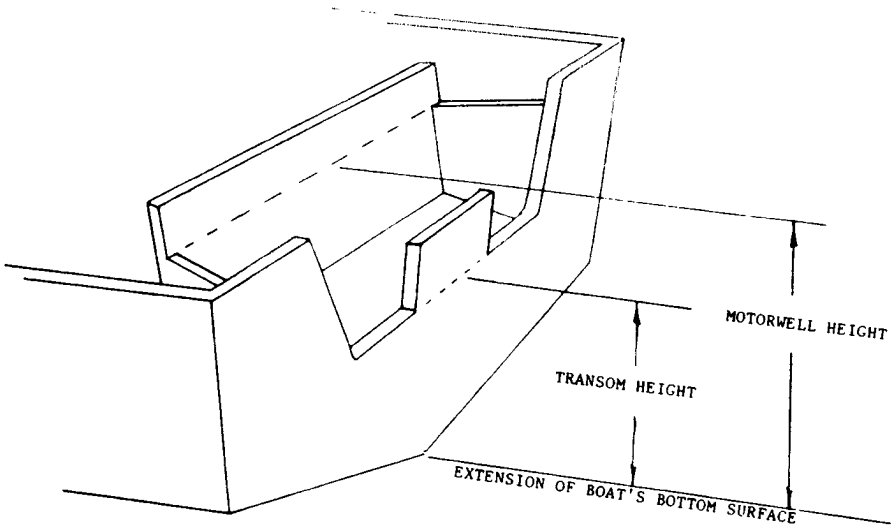

[CGD 73–250, 40 FR 43856, Sept. 23, 1975, as amended by CGD 75–176, 42 FR 2681, Jan. 13, 1977; CGD 85–002, 51 FR 37574, Oct. 23, 1986; CGD 96–026, 61 FR 33669, June 28, 1996; 61 FR 36629, July 12, 1996]

§183.5 Incorporation by reference.

(a) Certain materials are incorporated by reference into this part with the approval of the Director of the Federal Register in accordance with 5 U.S.C. 552(a). To enforce any edition other than the one listed in paragraph (b) of this section, notice of change must be published in the FEDERAL REGISTER and the material made available to the public. All approved material is on file at the Office of the Federal Register, 800 North Capitol Street, NW., suite 700, Washington, DC, and at the Recreational Boating Product Assurance Division, Washington, DC 20593–0001, and is available from the sources listed in paragraph (b) of this section.

(b) The materials approved for incorporation by reference in this part, and the sections affected are:

Air Movement and Control Association, 30 W. University Drive, Arlington Heights, IL 60004:	
AMCA 210–74: Laboratory Methods of Testing Fans for Ratings—1974.	§183.610
American Society for Testing and Materials, 1916 Race Street, Philadelphia, PA 19103:	
ASTM D–471 Rubber Property—Effect of Liquids—1979.	§§183.114; 183.516; 183.620
ASTM D–1621 Compressive Strength of Rigid Cellular Plastics—1979.	§183.516
ASTM D–1622 Apparent Density, of Rigid Cellular Plastics—1983.	§183.516
ASTM D–2842 Water Absorption of Rigid Cellular Plastics—1975.	§183.114
Institute of Electrical and Electronics, Engineers, Inc., 445 Hoes Lane, Piscataway, NJ 08854:	
IEEE 45 IEEE Recommended Practice for Electrical Installations on Shipboard—1983. Cable Construction.	§183.435

National Fire Protection Association, 1 Batterymarch Park, Quincy, MA 02269:	
NFPA No. 70 National Electrical Code—1987. Articles 310 & 400.	§ 183.435
Naval Publications Forms Center, Customer Service—Code 1052, 5801 Tabor Avenue, Philadelphia, PA 19120:	
MILSPEC–P–21929B Plastic Material, Cellular Polyurethane, Foam-In-Place, Rigid—1970.	§ 183.516
Society of Automotive Engineers, Inc., 400 Commonwealth Drive, Warrendale, PA 15096:	
SAE J378 Marine Engine Wiring—1984.	§ 183.430
SAE J557 High Tension Ignition Cable—1968.	§ 183.440
SAE J1127 Battery Cable—1980.	§ 183.430
SAE J1128 Low Tension Primary Cable—1975.	§ 183.430
SAE J1527DEC85 Marine Fuel Hoses—1985.	§ 183.540
Underwriters Laboratories, Inc., 333 Pfingsten Road, Northbrook, IL 60062:	
UL 1114 Marine (USCG Type A) Flexible Fuel Line Hose—1987.	§ 183.540
UL 1128 Marine Blowers—1977.	§ 183.610
UL 1426 Cables for Boats—1987.	§ 183.435

[CGD 87–009, 53 FR 36971, Sept. 23, 1988, as amended by CGD 96–026, 61 FR 33670, June 28, 1996]

Subpart B—Display of Capacity Information

§ 183.21 Applicability.

This subpart applies to monohull boats less than 20 feet in length, except sailboats, canoes, kayaks, and inflatable boats.

§ 183.23 Capacity marking required.

Each boat must be marked in the manner prescribed in §§ 183.25 and 183.27 with the maximum persons capacity in whole numbers of persons and in pounds, the maximum weight capacity in pounds, determined under §§ 183.33 through 183.43, and the maximum horsepower capacity determined under § 183.53 or the statement ''This Boat Not Rated for Propulsion by a Motor''.

[CGD 78–034, 45 FR 2029, Jan. 10, 1980, as amended by USCG–1999–5832, 64 FR 34716, June 29, 1999]

§ 183.25 Display of markings.

(a) Each marking required by § 183.23 must be permanently displayed in a legible manner where it is clearly visible to the operator when getting the boat underway.

(b) The information required by § 183.23 must be displayed in the following manner:

(1) For outboard boats:

U.S. Coast Guard Maximum Capacities

XX Persons or XXX Pounds
XXX Pounds, persons, motor, gear
XXX Horsepower, motor

or

U.S. Coast Guard Maximum Capacities

XX Persons or XXX Pounds
XXX Pounds, persons, motor, gear
XXX Horsepower, motor with remote steering
XXX Horsepower, motor without remote steering

(2) For inboard boats and inboard-outboard boats:

U.S. Coast Guard Maximum Capacities

XX Persons or XXX Pounds
XXX Pounds, persons, gear

(3) For boats rated for motors of 2 horsepower or less:

U.S. Coast Guard Maximum Capacities

XX Persons or XXX Pounds
XXX Pounds, persons, motor, gear
XXX Horsepower, motor

(4) For boats rated for manual propulsion:

U.S. Coast Guard Maximum Capacities

XX Persons or XXX Pounds
XXX Pounds, persons, gear

This Boat Not Rated for Propulsion by Motor

(c) The capacity information displays required in paragraph (b) must meet the following as illustrated in Figure 183.25:

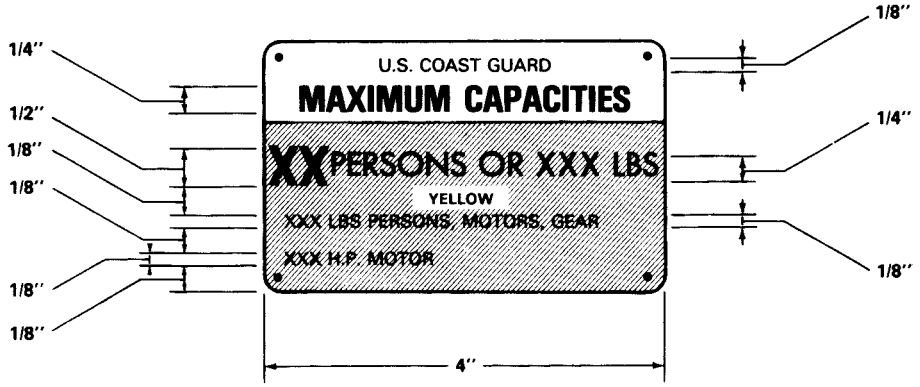

All Dimensions Are Minimum

FIGURE 183.25

(1) The capacity information required in §183.23 must be displayed within a yellow area that—

(i) Is at least 4 inches wide; and

(ii) Is high enough that each line of print is separated by at least ⅛ inch from each other and from the borders of the yellow area;

(2) The persons capacity in whole numbers must be black print with the following dimensions:

(i) The height must not be smaller than one-half inch;

(ii) The width of the numbers must be three-fifths of the height except for the number ''4'', which shall be one stroke width wider, and the number ''1'', which shall be one stroke in width;

(iii) The stroke width shall be one-sixth of the height; and

(iv) The minimum space between the numbers shall be one stroke width.

(3) The words in the line ''XX Persons or XXX Pounds'' must be at least one-quarter inch in height but not larger than one-half the height of the persons capacity number and of a color contrasting with yellow. The number of pounds in this line must be at least one-eighth inch in height but no larger than one-half the height of the persons capacity number and of a color contrasting with yellow.

(4) All remaining words and numbers required to be within the yellow area required in paragraph (c)(1) must be at least one-eighth inch in height, but no larger than one-half the height of the persons capacity number.

(5) All other words and numbers on the displays must be located outside the yellow area on a background color which contrasts with yellow.

(6) The words ''Maximum Capacities'' must be at least one-quarter inch in height and of color contrasting with its background.

(7) The words ''U.S. Coast Guard'' must be at least one-eighth inch in height and of color contrasting with its background.

[CGD 78–034, 45 FR 2029, Jan. 10, 1980]

§183.27 Construction of markings.

Each marking required by §183.23 must be—

(a) Capable of withstanding the combined effects of exposure to water, oil, salt spray, direct sunlight, heat, cold, and wear expected in normal operation of the boat, without loss of legibility; and

(b) Resistant to efforts to remove or alter the information without leaving some obvious sign of such efforts.

[CGD 78–034, 45 FR 2030, Jan. 10, 1980]

Subpart C—Safe Loading

§ 183.31 Applicability.

This subpart applies to monohull boats less than 20 feet in length except sailboats, canoes, kayaks, and inflatable boats.

§ 183.33 Maximum weight capacity: Inboard and inboard-outdrive boats.

(a) The maximum weight capacity (W) marked on a boat that has one or more inboard or inboard-outdrive units for propulsion must not exceed the greater value of W obtained from either of the following formulas:

$$W = \frac{\text{(maximum displacement)}}{5} - \frac{\text{boat weight}}{5} - \frac{4\ \text{(machinery weight)}}{5}$$

or

$$W = \frac{\text{(maximum displacement} - \text{boat weight)}}{7}$$

(b) For the purposes of paragraph (a) of this section:

(1) ''Maximum displacement'' is the weight of the volume of water displaced by the boat at its maximum level immersion in calm water without water coming aboard. For the purpose of this paragraph, a boat is level when it is transversely level and when either of the two following conditions are met:

(i) The forward point where the sheer intersects the vertical centerline plane and the aft point where the sheer intersects the upper boundary of the transom (stern) are equidistant above the water surface or are equidistant below the water surface.

(ii) The most forward point of the boat is level with or above the lowest point of water ingress.

(2) ''Boat weight'' is the combination of:

(i) Hull weight;

(ii) Deck and superstructure weight;

(iii) Weight of permanent appurtenances; and

(iv) Weight of full permanent fuel tanks.

(3) ''Machinery weight'' is the combined weight of installed engines or motors, control equipment, drive units, and batteries.

[CGD 72–61R, 37 FR 15782, Aug. 4, 1972]

EDITORIAL NOTE: For FEDERAL REGISTER citations affecting § 183.33, see the List of CFR Sections Affected in the Finding Aids section of this volume.

§ 183.35 Maximum weight capacity: Outboard boats.

(a) The maximum weight capacity marked on a boat that is designed or intended to use one or more outboard motors for propulsion must be a number that does not exceed one-fifth of the difference between its maximum displacement and boat weight.

(b) For the purposes of paragraph (a) of this section:

(1) ''Maximum displacement'' is the weight of the volume of water displaced by the boat at its maximum level immersion in calm water without water coming aboard except for water coming through one opening in the motor well with its greatest dimension not over 3 inches for outboard motor controls or fuel lines. For the purpose of this paragraph, a boat is level when it is transversely level and when either of the two following conditions are met:

(i) The forward point where the sheer intersects the vertical centerline plane and the aft point where the sheer intersects the upper boundary of the transom (stern) are equidistant above the water surface or are equidistant below the water surface.

(ii) The most forward point of the boat is level with or above the lowest point of water ingress.

(2) ''Boat weight'' is the combination of:

(i) Hull weight;

(ii) Deck and superstructure weight;

(iii) Weight of permanent appurtenances; and

(iv) Weight of full permanent fuel tanks.

[CGD 72–61, 37 FR 15782, Aug. 4, 1972, as amended by CGD 73–250, 40 FR 43857, Sept. 23, 1975; CGD 75–176, 42 FR 2681, Jan. 13, 1977; USCG–1999–5832, 64 FR 34716, June 29, 1999]

§183.37 Maximum weight capacity: Boats rated for manual propulsion and boats rated for outboard motors of 2 horsepower or less.

(a) The maximum weight capacity marked on a boat that is rated for manual propulsion or for motors of 2 horsepower or less must not exceed 3/10 of the difference between the boat's maximum displacement and the boat's weight in pounds.

(b) For the purposes of paragraph (a) of this section:

(1) ''Maximum displacement'' is the weight of the volume of water displaced by the boat at its maximum level immersion in calm water without water coming aboard. For the purpose of this paragraph, a boat is level when it is transversely level and when either of the two following conditions are met:

(i) The forward point where the sheer intersects the vertical centerline plane and the aft point where the sheer intersects the upper boundary of the transom (stern) are equidistant above the water surface or are equidistant below the water surface.

(ii) The most forward point of the boat is level with or above the lowest point of water ingress.

(2) ''Boat weight'' is the combination of:

(i) Hull weight;

(ii) Deck and superstructure weight; and

(iii) Weight of permanent appurtenances.

[CGD 72–61R, 37 FR 15782, Aug. 4, 1972]

EDITORIAL NOTE: For FEDERAL REGISTER citations affecting §183.37, see the List of CFR Sections Affected in the Finding Aids section of this volume.

§183.39 Persons capacity: Inboard and inboard-outdrive boats.

(a) The persons capacity in pounds marked on a boat that is designed to use one or more inboard engines or inboard-outdrive units for propulsion must not exceed the lesser of:

(1) The maximum weight capacity determined under §183.33 for the boat; or

(2) For boats with a maximum persons capacity less than 550 pounds, the maximum persons capacity determined in the following manner:

(i) Float the boat in calm water with all its permanent appurtenances, including installed engines, full fuel system and tanks, control equipment, drive units and batteries.

(ii) Gradually add weights along one outboard extremity of each passenger carrying area, at the height of the seat nearest the center of that area, but no higher than the height of the gunwale and distributed equally forward and aft of that center in a plane parallel to the floorboards, until the boat assumes the maximum list or trim or both, without water coming aboard.

(iii) Compute the persons capacity in pounds in the following formula: Persons capacity=A/0.6 where A is the total of the weights added in paragraph (a)(2)(ii) of this section.

(b) The maximum persons capacity in whole numbers of persons marked on a boat that is designed or intended to use one or more inboard engines or inboard-outboard units must not exceed the value obtained by adding 32 pounds to the value determined in paragraph (a)(2)(iii), dividing the sum by 141 and rounding off the result to the nearest whole number. If the fraction is less than one-half, round down to the next whole integer and if the fraction is equal to or greater than one-half, round up to the next higher whole integer.

[CGD 78–034, 45 FR 2030, Jan. 10, 1980, as amended by CGD 83–012, 49 FR 39328, Oct. 5, 1984; 50 FR 18636, May 2, 1985]

§183.41 Persons capacity: Outboard boats.

(a) The persons capacity in pounds marked on a boat that is designed to use one or more outboard motors for propulsion must not exceed the lesser of:

(1) The maximum weight capacity determined under §183.35 for the boat minus the motor and control weight, battery weight (dry), and full portable

fuel tank weight from Table 4 of Subpart H of this part; or

(2) For boats with a maximum persons capacity less than 550 pounds, the maximum persons capacity determined in the following manner:

(i) Float the boat with all its permanent appurtenances.

(ii) Add, in normal operating positions, the dry motor and control weight, battery weight, and full portable fuel tank weight, if any, shown in Table 4 of Subpart H of this part for the maximum horsepower capacity marked on the boat. Permanently installed fuel tanks shall be full of fuel.

(iii) Gradually add weights along one outboard extremity of each passenger carrying area, at the height of the seat nearest the center of that area, but no higher than the height of the gunwale, and distributed equally forward and aft of that center in a plane parallel to the floorboards until the boat assumes the maximum list or trim, or both without water coming aboard.

(iv) Compute the persons capacity in pounds using the following formula: Persons capacity=A/0.6 where A is the total of the weights added in paragraph (a)(2)(iii) of this section.

(b) The maximum persons capacity in whole numbers of persons marked on a boat designed or intended to use one or more outboard motors for propulsion must not exceed the value obtained by adding 32 pounds to the lesser of the values determined in paragraph (a)(1) or (a)(2)(iv), dividing the sum by 141, and rounding off the result to the nearest whole number. If the fraction is less than one-half, round down to the next lower whole integer and if the fraction is equal to or greater than one-half, round up to the next higher whole integer.

[CGD 78–034, 45 FR 2030, Jan. 10, 1980, as amended by CGD 83–012, 49 FR 39328, Oct. 5, 1984; 50 FR 18636, May 2, 1985]

§ 183.43 Persons capacity: Boats rated for manual propulsion and boats rated for outboard motors of 2 horsepower or less.

(a) The persons capacity in pounds marked on a boat that is rated for manual propulsion or for motors of 2 horsepower or less must not exceed:

(1) For boats rated for manual propulsion, 90 percent of the maximum weight capacity in pounds; and

(2) For boats rated for motors of 2 horsepower or less, 90 percent of the maximum weight capacity in pounds, less 25 pounds.

(b) The maximum persons capacity, in whole numbers of persons marked on a boat that is rated for manual propulsion must not exceed the value obtained by adding 32 pounds to the value determined in paragraph (a)(1), dividing the sum by 141, and rounding off the result to the nearest whole number. If the fraction is less than one-half, round down to the next lower integer and if the fraction is equal to or greater than one-half, round up to the next higher whole integer.

(c) The maximum persons capacity in whole numbers of persons marked on a boat rated for motors of 2 horsepower or less must not exceed the value obtained by adding 32 pounds to the value determined in paragraph (a)(2), dividing the sum by 141, and rounding off the result to the nearest whole number. If the fraction is less than one-half, round down to the next lower whole integer and if the fraction is equal to or greater than one-half, round up to the next higher whole integer.

[CGD 78–034, 45 FR 2031, Jan. 10, 1980]

Subpart D—Safe Powering

§ 183.51 Applicability.

This subpart applies to monohull boats less than 20 feet in length, except sailboats, canoes, kayaks, and inflatable boats, that are designed or intended to use one or more outboard motors for propulsion.

§ 183.53 Horsepower capacity.

The maximum horsepower capacity marked on a boat must not exceed the horsepower capacity determined by the computation method discussed in paragraph (a) of this section, or for certain qualifying boats, the performance test method discussed in paragraph (b) of this section.

(a) The maximum horsepower capacity must be computed as follows:

(1) Compute a factor by multiplying the boat length in feet by the maximum transom width in feet excluding handles and other similar fittings, attachments, and extensions. If the boat does not have a full transom, the transom width is the broadest beam in the aftermost quarter length of the boat.

(2) Locate horsepower capacity corresponding to the factor in Table 183.53.

(3) For a boat with a factor over 52.5, if the horsepower capacity calculated in Table 183.53 is not an exact multiple of 5, it may be raised to the next exact multiple of 5.

(4) For flat bottom hard chine boats with a factor of 52 or less, the horsepower capacity must be reduced by one horsepower capacity increment in Table 183.53.

TABLE 183.53—OUTBOARD BOAT HORSEPOWER CAPACITY

[Compute: Factor=Boat Length X Transom Width]

If factor (nearest integer) is	0–35	36–39	40–42	43–45	46–52
Horsepower Capacity is	3	5	7.5	10	15

[Note: For flat bottom hard chine boats, with factor of 52 or less, reduce one capacity limit (e.g. 5 to 3)]

If factor is over 52.5 and the boat has	Remote steering and at least 20″ transom height	No remote steering, or less than 20″ transom height	
		For flat bottom hard chine boats	For other boats
Horsepower capacity is (raise to nearest multiple of 5).	(2 X Factor) − 90	(0.5 X Factor) − 15	(0.8 X Factor) − 25

(b) For boats qualifying under this paragraph, the performance test method described in this paragraph may be used to determine the horsepower capacity.

(1) *Qualifying criteria.*

(i) Thirteen feet or less in length;

(ii) Remote wheel steering;

(iii) Transom height

(A) Minimum 19 inch transom height; or,

(B) For boats with at least a 19 inch motorwell height, a minimum 15 inch transom height;

(iv) Maximum persons capacity not over two persons;

(2) *Boat preparation.*

(i) The boat must be rigged with equipment recommended or provided by the boat and motor manufacturer and tested with the highest horsepower production powerplant for which the boat is to be rated, not to exceed 40 horsepower.

(ii) Standard equipment must be installed in accordance with manufacturers' instructions.

(iii) The lowest ratio (quickest) steering system offered on the boat model being tested must be installed.

(iv) The outboard motor must be fitted with the manufacturer's recommended propeller providing maximum speed.

(v) Standard permanently installed fuel tanks must be no more than one-half full. Boats without permanent tanks must be tested with one full portable tank.

(vi) Portable tanks must be in their designated location or placed as far aft as possible.

(vii) The outboard motor must be placed in the lowest vertical position on the transom or, if mounting instructions are provided with the boat, at the height recommended.

(viii) Boat bottom, motor and propeller must be in new or almost new condition.

NOTE: The use of the following special equipment should be considered because of the potential for exceeding the capabilities of the boat while performing the test:
Racing Type Personal Flotation Device
Helmet.

(3) *Test conditions.* Testing must be conducted on smooth, calm water with the wind speed below 10 knots. The test must be conducted with no load other than a driver who must weigh no more than 200 pounds. The motor trim angle must be adjusted to provide maximum full throttle speed short of excessive porpoising or propeller ventilation or ''cavitation'', so that there is no loss of directional control.

(4) *Quick turn test procedure.* Set throttle at a low maneuvering speed and steer the boat straight ahead. Turn the steering wheel 180° in the direction of least resistance in ½ second or less and hold it at that position without changing the throttle or trim settings during or after the wheel change. The boat completes the maneuver successfully if it is capable of completing a 90° turn without the driver losing control of the boat or reducing the throttle setting. Gradually increase the boat's turn entry speed incrementally until the boat does not complete the Quick Turn Test successfully or successfully completes it at maximum throttle.

NOTE: It is recognized that operator skill and familiarity with a particular boat and motor combination will affect the test results. It is permissible to make a number of practice runs through the quick turn test at any throttle setting.

(5) *Test course method.* Set throttle for 30 miles per hour boat speed and run the test course set up in accordance with Figure 183.53, passing outside the designated avoidance marker for 35 to 37.5 miles per hour without contacting any of the course markers. If the boat successfully completes this run of the test course, increase the throttle setting to 35 to 37.5 miles per hour boat speed and run the course passing outside the designated avoidance marker for that speed without contacting any of the course markers. If the boat successfully completes this run of the test course and the motor was not at full throttle, increase the throttle setting to 37.5 to 42.5 miles per hour boat speed and run the course passing outside the designated avoidance marker for that speed without contacting any of the course markers. If the boat successfully completes this run of the test course and the motor was not at full throttle, increase the throttle setting to 42.5 miles per hour or more and run the course passing outside the designated avoidance marker for that speed without contacting any of the course markers. If the boat successfully completes this run of the test course and the motor was not at full throttle, continue to increase the throttle setting and run the test course passing outside the designated avoidance marker for 42.5 miles per hour or more until the boat fails to complete the test successfully or the boat completes the test course maneuvers successfully at full throttle. The boat successfully completes the test course if the driver is able to maneuver it between the designated avoidance markers without striking the markers and without losing control of the boat or reducing the throttle setting. There must be no change in position of any equipment on board and there must be no change of position of personnel in order to influence the test results. There must be no instability evidenced by oscillating motion in the roll or yaw axes exhibited while negotiating the course.

NOTE: It is recognized that operator skill and familiarity with a particular boat and motor combination will affect the test results. It is therefore considered permissible to make a number of practice runs through the test course at any throttle setting.

(6) *Maximum horsepower capacity.* (i) For boats capable of less than 35 miles per hour, the maximum horsepower capacity must be the maximum horsepower with which the boat was able to successfully complete the Quick Turn Test Procedure in § 183.53(b)(4) at full throttle or the maximum horsepower determined under the calculations in § 183.53(a) of this section.

(ii) For boats capable of 35 miles per hour or more, the maximum horsepower capacity must be the maximum horsepower with which the boat was able to successfully complete both the Quick Turn Test Procedure in § 183.53(b)(4) and the Test Course Method in § 183.53(b)(5) at full throttle or the calculations in § 183.53(a) of this section.

(iii) The maximum horsepower capacity determined in accordance with § 183.53(b) must not exceed 40 horsepower.

Figure 183.53.—Boat Horsepower Capacity Test Course—35 mph or more

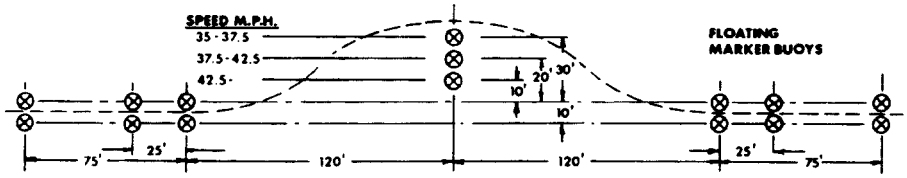

[CGD 85–002, 51 FR 37574, Oct. 23, 1986]

Subpart E [Reserved]

Subpart F—Flotation Requirements for Inboard Boats, Inboard/Outdrive Boats, and Airboats

SOURCE: CGD 75–168, 42 FR 20243, Apr. 18, 1977, unless otherwise noted.

§ 183.101 Applicability.

This subpart applies to monohull inboard boats, inboard/outdrive boats, and airboats less than 20 feet in length, except sailboats, canoes, kayaks, inflatable boats, submersibles, surface effect vessels, amphibious vessels, and raceboats.

[CGD 75–168, 42 FR 20243, Apr. 18, 1977, as amended by USCG–1999–5832, 64 FR 34716, June 29, 1999]

§ 183.105 Quantity of flotation required.

(a) Each boat must have enough flotation to keep any portion of the boat above the surface of the water when the boat has been submerged in calm, fresh water for at least 18 hours and loaded with:

(1) A weight that, when submerged, equals two-fifteenths of the persons capacity marked on the boat;

(2) A weight that, when submerged, equals 25 percent of the dead weight; and

(3) A weight in pounds that, when submerged, equals 62.4 times the volume in cubic feet of the two largest air chambers, if air chambers are used for flotation.

(b) For the purpose of this section, ''dead weight'' means the maximum weight capacity marked on the boat minus the persons capacity marked on the boat.

§ 183.110 Definitions.

For the purpose of this subpart:

ASTM means American Society for Testing and Materials. The Coast Guard incorporates by reference ASTM Standard D-471, dated March 28, 1975, in § 183.114 of this subpart. This incorporation by reference was approved by the Director of the Office of the Federal Register on December 6, 1977. The Coast Guard also incorporates by reference ASTM Standard D-2482, dated November 14, 1969 (reapproved 1975), in § 183.114 of this subpart. This incorporation by reference was approved by the Director of the Office of the Federal Register on September 11, 1978. The incorporated standards are available for inspection at Coast Guard Headquarters, Room 1308, Transpoint Building, 2100 2nd St., SW., Washington DC 20593 and at the Office of the Federal Register library, 800 North Capitol Street, NW., suite 700, Washington DC 20408. The incorporated standards may be obtained from the American Society for Testing and Materials, 1916 Race St., Philadelphia, PA 19103.

Bilge means the area in the boat, below a height of 4 inches measured from the lowest point in the boat where liquid can collect when the boat is in its static floating position, except engine rooms.

Connected means allowing a flow of water in excess of one-quarter ounce per hour from the engine room bilge into any other compartment with a 12 inch head of water on the engine room side of the bulkhead.

Engine room bilge means the area in the engine room or a connected compartment below a height of 12 inches measured from the lowest point where

liquid can collect in these compartments when the boat is in its static floating position.

Engine room means the compartment where a permanently installed gasoline or diesel engine is installed, including connected compartments.

Open to atmosphere means a compartment that has at least 15 square inches of open area directly exposed to the atmosphere for each cubic foot of net compartment volume.

Sealed compartment means an enclosure that can resist an exterior water level of 12 inches without seepage of more than one-quarter fluid ounce per hour.

[CGD 77–145, 43 FR 56858, Dec. 4, 1978, as amended by CGD 82–010, 48 FR 8273, Feb. 28, 1983; CGD 85–098, 52 FR 19728, May 27, 1987; CGD 96–026, 61 FR 33670, June 28, 1996; USCG–1999–5832, 64 FR 34716, June 29, 1999]

§ 183.112 Flotation material and air chambers.

(a) Flotation materials must meet the requirements in § 183.114 as listed in Table 183.114 when used in the: (1) Engine room bilge, (2) engine room, or (3) bilge, unless located in a sealed compartment.

(b) Air chambers used to meet the flotation requirements of this subpart must not be integral with the hull.

[CGD 77–145, 43 FR 56859, Dec. 4, 1978; 44 FR 47934, Aug. 16, 1979]

§ 183.114 Test of flotation materials.

(a) *Vapor test.* The flotation material must not reduce in buoyant force more than 5 percent after being immersed in a fully saturated gasoline vapor atmosphere for 30 days at a minimum temperature of 38 °C.

(b) *24-hour gasoline test.* The flotation material must not reduce in buoyant force more than 5 percent after being immersed for 24 hours at 23 plus or minus 2 °C in reference fuel B, of ASTM D–471.

(c) *30-day gasoline test.* The flotation material must not reduce in buoyant force more than 5 percent after being immersed for 30 days at 23 plus or minus 2 °C in reference fuel B, of ASTM D–471.

(d) *24-hour oil test.* The flotation material must not reduce in buoyant force more than 5 percent after being immersed for 24 hours at 23 plus or minus 2 °C in reference oil No. 2, of ASTM D–471.

(e) *30-day oil test.* The flotation material must not reduce in buoyant force more than 5 percent after being immersed for 30 days at 23 plus or minus 2 °C in reference oil No. 2, of ASTM D–471.

(f) *24-hour bilge cleaner test.* The flotation material must not reduce in buoyant force more than 5 percent after being immersed for 24 hours at 23 plus or minus 2 °C in a 5-percent solution of trisodium phosphate in water.

(g) *30-day bilge cleaner test.* The flotation material must not reduce in buoyant force more than 5 percent after being immersed for 30 days at 23 plus or minus 2 °C in a 5-percent solution of trisodium phosphate in water.

(h) The buoyant force reduction in paragraphs (a) through (g) of this section is measured in accordance with ASTM D–2842.

TABLE 183.114—FLOTATION PERFORMANCE TESTS

Test 183.114	Area 183.110		
	(b) Engine-room bilge	(c) Engine-room unless open to atmosphere	(d) Bilge
(a) Vapor test	.....	X	.....
(b) 24 hour gasoline test	.....	.....	X
(c) 30 day gasoline test	X	.....	.....
(d) 24 hour oil test	.....	.....	X
(e) 30 day oil test	X	.....	.....
(f) 24 hour bilge cleaner test	.....	.....	X
(g) 30 day bilge cleaner test	X	.....	.....

[CGD 77–145, 43 FR 56859, Dec. 4, 1978; 44 FR 47934, Aug. 16, 1979]

Subpart G—Flotation Requirements for Outboard Boats Rated for Engines of More Than 2 Horsepower

SOURCE: CGD 75–168, 42 FR 20243, Apr. 18, 1977, unless otherwise noted.

GENERAL

§ 183.201 Applicability.

(a) This subpart applies to monohull outboard boats that are:

(1) Less than 20 feet in length; and

(2) Rated for outboard engines of more than 2 horsepower.

(b) This subpart does not apply to sailboats, canoes, kayaks, inflatable boats, submersibles, surface effect vessels, amphibious vessels, and raceboats.

[CGD 75–168, 42 FR 20243, Apr. 18, 1977, as amended by USCG–1999–5832, 64 FR 34716, June 29, 1999]

§ 183.202 Flotation and certification requirements.

Each boat to which this subpart applies must be manufactured, constructed, or assembled to pass the stability and flotation tests prescribed in §§ 183.225(a), 183.230(a), and 183.235(a).

§ 183.205 Passenger carrying area.

(a) For the purpose of this section a boat is level when it is supported on its keel at the two points shown in Figure 2.

(b) As used in this subpart, the term ''passenger carrying area'' means each area in a boat in which persons can sit in a normal sitting position or stand while the boat is in operation. Passenger carrying areas are illustrated in Figures 3 through 8.

(c) The length of the passenger carrying area is the distance along the centerline of the boat between two vertical lines, one at the forward end and one at the aft end of the passenger carrying area when the boat is level as illustrated in Figures 3 and 4. For boats with a curved stem inside the passenger carrying area, the forward vertical line is where a line 45 degrees to the horizontal when the boat is level is tangent to the curve of the stem, as illustrated in Figure 5. For boats with cabins, the forward vertical line is where there is a minimum distance of two feet between the inside top of the cabin and the water line formed when the boat is swamped and loaded with weights under § 183.220 as illustrated in Figure 6.

(d) The breadth of each passenger carrying area is the distance between two vertical lines at the mid-length, excluding consoles, of the passenger carrying area when the boat is level as illustrated in Figures 7 and 8. For boats with round chines inside the passenger carrying area, the vertical line is where a transverse line 45 degrees to the horizontal is tangent to the arc of the chine, as illustrated in Figure 8.

[CGD 75–168, 42 FR 20243, Apr. 18, 1977, as amended by USCG–1999–5832, 64 FR 34716, June 29, 1999]

§ 183.210 Reference areas.

(a) The forward reference area of a boat is the forward most 2 feet of the top surface of the hull or deck, as illustrated in Figure 9.

(b) The aft reference area of a boat is the aft most two feet of the top surface of the hull or deck, as illustrated in Figure 9.

§ 183.215 Reference depth.

Reference depth is the minimum distance between the uppermost surface of the submerged reference area of a boat and the surface of the water measured at the centerline of the boat, as illustrated in Figure 10. If there is no deck surface at the centerline of the boat from which a measurement can be made, the reference depth is the average of two depth measurements made on opposite sides of, and at an equal distance from, the centerline of the boat.

§ 183.220 Preconditioning for tests.

A boat must meet the following conditions for at least 18 hours before the tests required by §§ 183.225, 183,230, and 183.235:

(a) Manufacturer supplied permanent appurtenances such as windshields and convertible tops must be installed on the boat.

(b) The boat must be loaded with a quantity of weight that, when submerged, is equal to the sum of the following:

(1) The sum of 50 percent of the first 550 pounds of the persons capacity marked on the boat and 12½ percent of the remainder of the persons capacity.

(2) Twenty-five percent of the result of the following calculation, but not less than zero: The maximum weight capacity marked on the boat; less the weight shown in Column 6 of Table 4 for maximum horsepower marked on the boat; less the persons capacity marked on the boat.

(c) The weights required by paragraph (b) of this section must be placed

in the boat so that the center of gravity of each amount of weight required by paragraphs (b)(1) and (b)(2) of this section is within the shaded area illustrated in Figure 11. The location and dimensions of the shaded area are as follows:

(1) The shaded area is centered at the mid-length of the passenger carrying area and at the mid-breadth of the boat;

(2) The length of the shaded area, measured along the centerline of the boat, is equal to 40 percent of the length of the passenger carrying area of the boat; and

(3) The breadth of the shaded area, measured at the midlength of the passenger carrying area, is equal to 40 percent of the breadth of the passenger carrying area of the boat.

(d) Weight must be placed in the normal operating position of the motor and controls and the battery in lieu of this equipment. The required quantity of weight used for this purpose depends upon the maximum rated horsepower of the boat being tested and is specified in Columns 2 and 4 of Table 4 for the swamped weight of the motor and controls and for the submerged weight or the battery, respectively.

(e) Permanent fuel tanks must be filled with fuel and each external opening into the fuel tank must be sealed.

(f) The boat must be keel down in the water.

(g) The boat must be swamped, allowing water to flow between the inside and outside of the boat, either over the sides, through a hull opening, or both. Entrapped air in the flooded portion of the boat must be eliminated.

(h) Water must flood the two largest air chambers and all air chambers integral with the hull.

[CGD 75–168, 42 FR 20243, Apr. 18, 1977, as amended by USCG–1999–5832, 64 FR 34716, June 29, 1999]

§ 183.222 Flotation material and air chambers.

(a) Flotation materials must meet the requirements in § 183.114 as listed in Table 183.114 when used in the bilge, unless located in a sealed compartment.

(b) Air chambers used to meet the flotation requirements of this subpart must not be integral with the hull.

[CGD 77–145, 43 FR 56859, Dec. 4, 1978; 44 FR 47934, Aug. 16, 1979]

TESTS

§ 183.225 Flotation test for persons capacity.

Flotation standard. When the conditions prescribed in § 183.220 are met, the boat must float in fresh, calm water as follows:

(a) The angle of heel does not exceed 10 degrees from the horizontal.

(b) Any point on either the forward or aft reference area is above the surface of the water.

(c) The reference depth at the reference area that is opposite the reference area that is above the surface of the water is 6 inches or less.

§ 183.230 Stability test.

(a) *Flotation standard.* When the conditions prescribed in § 183.220 (a), (d) through (h) and paragraphs (b) and (c) of this section are met, the boat must float in fresh, calm water as follows:

(1) The angle of heel does not exceed 30 degrees from the horizontal.

(2) Any point on either the forward or aft reference area is above the surface of the water.

(3) The reference depth at the reference area that is opposite the reference area that is above the surface of the water is 12 inches or less.

(b) *Quantity of weight used.* Load the boat with a quantity of weight that, when submerged, is equal to the sum of the following:

(1) One-half of the quantity of weight required by § 183.220(b)(1).

(2) The quantity of weight required by § 183.220(b)(2).

(c) *Placement of quantity of weight: starboard side.* Place the weight required by paragraph (b) of this section in the boat so that:

(1) The quantity of weight required by § 183.220(b)(2) is positioned in accordance with § 183.220(c); and

(2) One-half the quantity of weight required by § 183.220(b)(1) is uniformly distributed over a distance along the outboard perimeter of the starboard side of the passenger carrying area

that is equal to at least 30 percent of the length of the passenger carrying area so that the center of gravity of the quantity of weight is located within the shaded area illustrated in Figure 12, the center of gravity of the amount of weight placed on the floor of the boat is at least 4 inches above the floor, and the center of gravity of the amount of weight placed on a seat is at least 4 inches above the seat. The location and dimensions of the shaded area are as follows:

(i) The shaded area is centered at the mid-length of the passenger carrying area;

(ii) The length of the shaded area is equal to 70 percent of the length of the passenger carrying area; and

(iii) The breadth of the shaded area is 6 inches from:

(A) For weights placed on the floor, the outboard perimeter of the passenger carrying area; and

(B) For weights placed on a seat, a vertical line inside the passenger carrying area as illustrated in Figure 13.

(d) *Placement of quantity of weight: port side.* The quantity of weight required by paragraph (b)(1) of this section is placed along the port side of the passenger carrying area in accordance with the conditions prescribed in paragraph (c)(2) of this section.

§ 183.235 Level flotation test without weights for persons capacity.

When the conditions prescribed in § 183.220 (a) and (d) through (h) are met, the boat must float in fresh, calm water as follows:

(a) The angle of heel does not exceed 10 degrees from the horizontal.

(b) Any point on either the forward or aft reference area is above the surface of the water.

(c) The reference depth at the reference area that is opposite the reference area that is above the surface of the water is 6 inches or less.

[CGD 77–145, 43 FR 56859, Dec. 4, 1978, as amended by USCG–1999–5832, 64 FR 34716, June 29, 1999]

Subpart H—Flotation Requirements for Outboard Boats Rated for Engines of 2 Horsepower or Less

SOURCE: CGD 75–168, 42 FR 20245, Apr. 18, 1977, unless otherwise noted.

GENERAL

§ 183.301 Applicability.

(a) This subpart applies to monohull outboard boats that are:

(1) Less than 20 feet in length; and

(2) Rated for manual propulsion or outboard engines of 2 horsepower or less.

(b) This subpart does not apply to sailboats, canoes, kayaks, inflatable boats, submersibles, surface effect vessels, amphibious vessels, and raceboats.

[CGD 75–168, 42 FR 20245, Apr. 18, 1977, as amended by USCG–1999–5832, 64 FR 34716, June 29, 1999]

§ 183.302 Flotation requirements.

Each boat to which this subpart applies must be manufactured, constructed, or assembled to pass the stability and flotation tests prescribed in §§ 183.325(a), 183.330(a), and 183.335(a).

§ 183.305 Passenger carrying area.

(a) For the purpose of this section, a boat is level when it is supported on its keel at the two points shown in Figure 2.

(b) As used in this subpart, the term ''passenger carrying area'' means each area in a boat in which persons can sit in a normal sitting position or stand while the boat is in operation. Passenger carrying areas are illustrated in Figures 3 through 8.

(c) The length of each passenger carrying area is the distance along the centerline of the boat between two vertical lines, one at the forward end and one at the aft end of the passenger carrying area, when the boat is level, as illustrated in Figures 3 and 4. For boats with a curved stem inside the passenger carrying area, the forward vertical line is where a line 45 degrees to the horizontal when the boat is level

is tangent to the curve of the stem, as illustrated in Figure 5. For boats with cabins, the forward vertical line is where there is a minimum distance of two feet between the inside top of the cabin and the water line formed when the boat is swamped and loaded with weights under § 183.320 as illustrated in Figure 6.

(d) The breadth of the passenger carrying area is the distance beteen two vertical lines at the mid-length, excluding consoles, of the passenger carrying area when the boat is level as illustrated in Figures 7 and 8. For boats with round chines inside the passenger carrying area, the vertical line is where a transverse line 45 degrees to the horizontal is tangent to the arc of the chine, as illustrated in Figure 7.

[CGD 75–168, 42 FR 20245, Apr. 18, 1977; 42 FR 24738, May 16, 1977]

§ 183.310 Reference areas.

(a) The forward reference area of a boat is the forwardmost 2 feet of the top surface of the hull or deck as illustrated in Figure 9.

(b) The aft reference area of a boat is the aftmost two feet of the top surface of the hull or deck, as illustrated in Figure 9.

§ 183.315 Reference depth.

Reference depth is the minimum distance between the uppermost surface of the submerged reference area of a boat and the surface of the water measured at the centerline of the boat, as illustrated in Figure 10. If there is no deck surface at the centerline of the boat from which a measurement can be made, the reference depth is the average of two depth measurements made on opposite sides of, and at an equal distance from, the centerline of the boat.

§ 183.320 Preconditioning for tests.

A boat must meet the following conditions for at least 18 hours before the tests required by §§ 183.325, 183.330, and 183.335:

(a) Manufacturer supplied permanent appurtenances such as windshields, and convertible tops must be installed on the boat.

(b) The boat must be loaded with a quantity of weight that, when submerged, is equal to the sum of the following:

(1) Two-fifteenths of the persons capacity marked on the boat.

(2) Twenty-five percent of the result of the following calculation, but not less than zero: the maximum weight capacity marked on the boat; less the weight shown in column 6 of Table 4 for the maximum horsepower marked on the boat; less the persons capacity marked on the boat.

(c) The weights required by paragraph (b) of this section are placed in the boat so that the center of gravity of each amount of weight required by paragraphs (b)(1) and (b)(2) of this section is within the shaded area illustrated in Figure 11. The location and dimensions of the shaded area are as follows:

(1) The shaded area is centered at the mid-length of the passenger carrying area and at the mid-breadth of the boat;

(2) The length of the shaded area, measured along the centerline of the boat, is equal to 40 percent of the length of the passenger carrying area of the boat; and

(3) The breadth of the shaded area, measured at the mid-length of the passenger carrying area, is equal to 40 percent of the breadth of the passenger carrying area of the boat.

(d) Weight must be placed in the normal operating position of the motor and controls in lieu of this equipment. The quantity of weight used for this purpose depends upon the maximum rated horsepower of the boat being tested and is specified in Column 2 of Table 4 for the swamped weight of the motor and controls.

(e) Permanent fuel tanks must be filled with fuel and each external opening into the fuel tank must be sealed.

(f) The boat must be keel down in the water.

(g) The boat must be swamped, allowing water to flow between the inside and the outside of the boat, either over the sides, through a hull opening, or both. Entrapped air in the flooded portion of the boat must be eliminated.

§ 183.322 Flotation materials.

(a) Flotation materials must meet the requirements in § 183.114 as listed in

Table 183.114 when used in the bilge, unless located in a sealed compartment.

[CGD 77–145, 43 FR 56859, Dec. 4, 1978; 44 FR 47934, Aug. 16, 1979]

TESTS

§ 183.325 Flotation test for persons capacity.

Flotation standard. When the conditions prescribed in § 183.320 are met, the boat must float in fresh, calm water as follows:

(a) The angle of heel does not exceed 10 degrees from the horizontal.

(b) Any point on either the forward or aft reference area is above the surface of the water.

(c) The reference depth at the reference area that is opposite the reference area that is above the surface of the water is 6 inches or less.

§ 183.330 Stability test.

(a) *Flotation standard.* When the conditions prescribed in § 183.320 (a), (d) through (g) and paragraphs (b) and (c) of this section are met, the boat must float in fresh, calm water as follows:

(1) The angle of heel does not exceed 30 degrees from the horizontal.

(2) Any point on either the forward or aft reference area is above the surface of the water.

(3) The reference depth at the reference area that is opposite the reference area that is above the surface of the water is 12 inches or less.

(b) *Quantity of weight used.* Load the boat with quantity of weight that, when submerged, is equal to the sum of the following:

(1) One-half the quantity of weight required by § 183.320(b)(1).

(2) The quantity of weight required by § 183.320(b)(2).

(c) *Placement of quantity of weight: starboard side.* Place the quantity of weight required by paragraph (b) of this section in the boat so that:

(1) The quantity of weight required by § 183.320(b)(2) is positioned in accordance with § 183.320(c); and

(2) One-half the quantity of weight required by § 183.320(b)(1) is uniformly distributed over a distance along the outboard perimeter of the starboard side of the passenger carrying area that is equal to at least 30 percent of the length of the passenger carrying area so that the center of gravity of the quantity of weight is located within the shaded area illustrated in Figure 12, the center of gravity of the amount of weight placed on the floor of the boat is at least 4 inches above the floor and the center of gravity of the amount of weight placed on a seat is at least 4 inches above the seat. The location and dimensions of the shaded area are as follows:

(i) The shaded area is centered at the mid-length of the passenger carrying area;

(ii) The length of the shaded area is equal to 70 percent of the length of the passenger carrying area; and

(iii) The breadth of the shaded area is 6 inches from:

(*a*) For weights placed on the floor, the outboard perimeter of the passenger carrying area; and

(*b*) For weights placed on a seat, a vertical line inside the passenger carrying area as illustrated in Figure 13.

(d) *Placement of quantity of weight: port side.* The quantity of weight required by paragraph (b)(1) of this section is placed along the port side of the passenger carrying area in accordance with the conditions prescribed in paragraph (c)(2) of this section.

§ 183.335 Level flotation test without weights for persons capacity.

When the conditions prescribed in § 183.320 (a) and (d) through (g) are met, the boat must float in fresh, calm water as follows:

(a) The angle of heel does not exceed 10 degrees from the horizontal.

(b) Any point on either the forward or aft reference area is above the surface of the water.

(c) The reference depth at the reference area that is opposite the reference area that is above the surface of the water is 6 inches or less.

[CGD 75–168, 42 FR 20245, Apr. 18, 1977, as amended by USCG–1999–5832, 64 FR 34716, June 29, 1999]

TABLE 4—WEIGHTS (POUNDS) OF OUTBOARD MOTOR AND RELATED EQUIPMENT FOR VARIOUS BOAT HORSEPOWER RATINGS

Boat horsepower rating	Motor and control weight		Battery weight		Full portable fuel tank weight	1+3+5
	Dry	Swamped	Dry	Submerged		
	Column No.					
	1	2	3	4	5	6
0.1 to 2	25	20	.....	.....	.....	25
2.1 to 3.9	40	34	.....	.....	.....	40
4.0 to 7	60	52	.....	.....	25	35
7.1 to 15	90	82	20	11	50	160
15.1 to 25	125	105	45	25	50	220
25.1 to 45	170	143	45	25	100	315
45.1 to 60	235	195	45	25	100	380
60.1 to 80	280	235	45	25	100	425
80.1 to 145	405	352	45	25	100	550
145.1 to 275	430	380	45	25	100	575
275.1 and up	605	538	45	25	100	750
TRANSOMS DESIGNED FOR TWIN MOTORS						
50.1 to 90	340	286	90	50	100	530
90.1 to 120	470	390	90	50	100	660
120.1 to 160	560	470	90	50	100	750
160.1 to 290	810	704	90	50	100	1000
290.1 to 550	860	760	90	50	100	1050
550.1 and up	1210	1076	90	50	100	1400

[CGD 83–012, 49 FR 39328, Oct. 5, 1984]

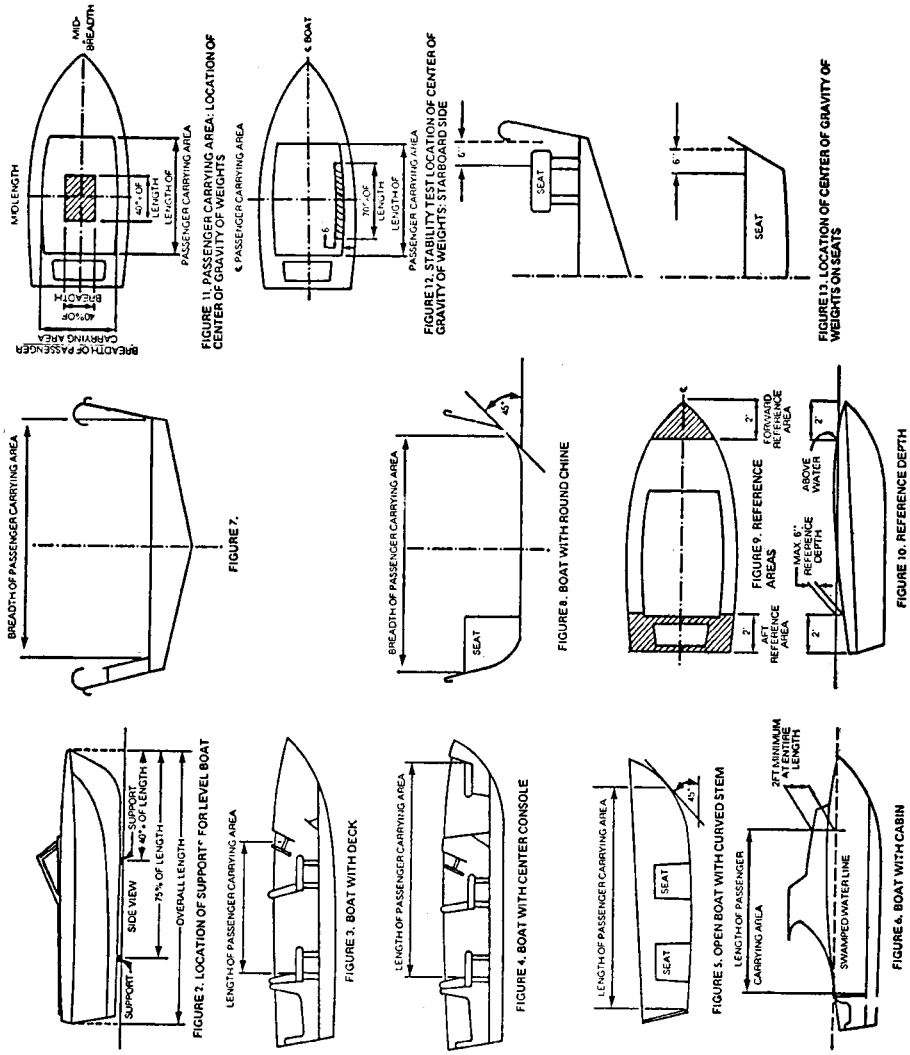

Subpart I—Electrical Systems

SOURCE: CGD 73–217, 42 FR 5944, Jan. 31, 1977, unless otherwise noted.

GENERAL

§ 183.401 Purpose, applicability, and effective dates.

(a) This subpart applies to all boats that have gasoline engines, except outboard engines, for electrical generation, mechanical power, or propulsion.

(b) [Reserved]

[CGD 73–217, 42 FR 5944, Jan. 31, 1977, as amended by CGD 81–092, 48 FR 55736, Dec. 15, 1983; USCG–1999–5832, 64 FR 34716, June 29, 1999]

§ 183.402 Definitions.

As used in this subpart—

AWG means American Wire Gauge.

Electrical component means electrical equipment such as, but not limited to, conductors, solenoids, motors, generators, alternators, distributors, resistors, appliances and electrical control devices.

Pigtails means external power conductors or wires that are part of electrical components and appliances, such as bilge pumps, blowers, lamps, switches, solenoids, and fuses.

Sheath means a material used as a continuous protective covering, such as electrical tape, molded rubber, molded plastic, or flexible tubing, around one or more insulated conductors.

[CGD 73–217, 42 FR 5944, Jan. 31, 1977, as amended by CGD 85–098, 52 FR 19728, May 27, 1987; CGD 96–026, 61 FR 33670, June 28, 1996]

§ 183.405 General.

Each electrical component on a boat to which this subpart applies must meet the requirements of this subpart unless the component is part of an outboard engine or part of portable equipment.

MANUFACTURER REQUIREMENTS

§ 183.410 Ignition protection.

(a) Each electrical component must not ignite a propane gas and air mixture that is 4.25 to 5.25 percent propane gas by volume surrounding the electrical component when it is operated at each of its manufacturer rated voltages and current loadings, unless it is isolated from gasoline fuel sources, such as engines, and valves, connections, or other fittings in vent lines, fill lines, distribution lines or on fuel tanks, in accordance with paragraph (b) of this section.

(b) An electrical component is isolated from a gasoline fuel source if:

(1) A bulkhead that meets the requirements of paragraph (c) of this section is between the electrical component and the gasoline fuel source;

(2) The electrical component is:

(i) Lower than the gasoline fuel source and a means is provided to prevent fuel and fuel vapors that may leak from the gasoline fuel source from becoming exposed to the electrical component; or

(ii) Higher than the gasoline fuel source and a deck or other enclosure is between it and the gasoline fuel source; or

(3) The space between the electrical component and the gasoline fuel source is at least two feet and the space is open to the atmosphere.

(c) Each bulkhead required by paragraph (b)(1) of this section must:

(1) Separate the electrical component from the gasoline fuel source and extend both vertically and horizontally the distance of the open space between the fuel source and the ignition source;

(2) Resist a water level that is 12 inches high or one-third of the maximum height of the bulkhead, whichever is less, without seepage of more than one-quarter fluid ounce of fresh water per hour; and

(3) Have no opening located higher than 12 inches or one-third the maximum height of the bulkhead, whichever is less, unless the opening is used for the passage of conductors, piping, ventilation ducts, mechanical equipment, and similar items, or doors, hatches, and access panels, and the maximum annular space around each item or door, hatch or access panel must not be more than one-quarter inch.

§ 183.415 Grounding.

If a boat has more than one gasoline engine, grounded cranking motor circuits must be connected to each other by a common conductor circuit that can carry the starting current of each of the grounded cranking motor circuits.

§ 183.420 Batteries.

(a) Each installed battery must not move more than one inch in any direction when a pulling force of 90 pounds or twice the battery weight, whichever is less, is applied through the center of gravity of the battery as follows:

(1) Vertically for a duration of one minute.

(2) Horizontally and parallel to the boat's center line for a duration of one minute fore and one minute aft.

(3) Horizontally and perpendicular to the boat's center line for a duration of one minute to starboard and one minute to port.

(b) Each battery must be installed so that metallic objects cannot come in

contact with the ungrounded battery terminals.

(c) Each metallic fuel line and fuel system component within 12 inches and above the horizontal plane of the battery top surface as installed must be shielded with dielectric material.

(d) Each battery must not be directly above or below a fuel tank, fuel filter, or fitting in a fuel line.

(e) A vent system or other means must be provided to permit the discharge from the boat of hydrogen gas released by the battery.

(f) [Reserved]

(g) Each battery terminal connector must not depend on spring tension for its mechanical connection to the terminal.

[CGD 73–217, 42 FR 5944, Jan. 31, 1977, as amended by CGD 81–092, 48 FR 55736, Dec. 15, 1983]

§ 183.425 Conductors: General.

(a) Each conductor must be insulated, stranded copper.

(b) Except for intermittent surges each conductor must not carry a current greater than that specified in Table 5 for the conductor's gauge and temperature rating.

(c) For conductors in engine spaces, amperages must be corrected by the appropriate correction factor in note 1 of Table 5.

(d) Each conductor in a multiconductor sheath must be at least a No. 18 AWG conductor.

(e) Each conductor installed separately must be at least a No. 16 AWG conductor.

(f) Each No. 18 AWG conductor in a multiconductor sheath may not extend out of the sheath more than 30 inches.

(g) This section does not apply to communications systems; electronic navigation equipment; electronic circuits having a current flow of less than one ampere; conductors which are totally inside an equipment housing; resistance conductors that control circuit amperage; high voltage secondary conductors and terminations that are in ignition systems; pigtails of less than seven inches of exposed length and cranking motor conductors.

TABLE 5—ALLOWABLE AMPERAGE OF CONDUCTORS

Conductor size (AWG)	Temperature rating of conductor insulation						
	60 °C (140 °F)	75 °C (167 °F)	80 °C (176 °F)	90 °C (194 °F)	105 °C (221 °F)	125 °C (257 °F)	200 °C (392 °F)
18	10	10	15	20	20	25	25
16	15	15	20	25	25	30	35
14	20	20	25	30	35	40	45
12	25	25	35	40	45	50	55
10	40	40	50	55	60	70	70
8	55	65	70	70	80	90	100
6	80	95	100	100	120	125	135
4	105	125	130	135	160	170	180
3	120	145	150	155	180	195	210
2	140	170	175	180	210	225	240
1	165	195	210	210	245	265	280
0	195	230	245	245	285	305	325
00	225	265	285	285	330	355	370
000	260	310	330	330	385	410	430
0000	300	360	385	385	445	475	510

NOTES

1. See the following table:	60 °C (140 °F)	75 °C (167 °F)	80 °C (176 °F)	90 °C (194 °F)	105 °C (221 °F)	125 °C (257 °F)	200 °C (392 °F)
Temperature rating of conductor	0.58	0.75	0.78	0.82	0.85	0.89	1.00

2. See the following table:	*Correction factor*
Number of current carrying conductors:	
3	0.70
4 to 6	.60
7 to 24	.50
25 and above	.40

[CGD 73–217, 42 FR 5944, Jan. 31, 1977; 42 FR 24739, May 16, 1977, as amended by CGD 81–092, 48 FR 55736, Dec. 15, 1983]

§ 183.430 Conductors in circuits of less than 50 volts.

(a) Each conductor in a circuit that has a nominal voltage of less than 50 volts must:

(1) Meet the requirements of § 183.435; or

(2) Meet:

(i) The insulating material temperature rating requirements of SAE Standard J378; and

(ii) SAE Standard J1127, or SAE Standard 1128.

(b) This section does not apply to communication systems; electronic navigation equipment; resistance conductors that control circuit amperage; and pigtails of less than seven inches of exposed length.

[CGD 73–217, 42 FR 5944, Jan. 31, 1977, as amended by CGD 87–009, 53 FR 36971, Sept. 23, 1988]

§ 183.435 Conductors in circuits of 50 volts or more.

(a) Each conductor in a circuit that has a nominal voltage of 50 volts or more must be:

(1) A conductor that has insulation listed and classified moisture resistant and flame retardant in Article 310, NFPA No. 70, National Electric Code;

(2) A flexible cord type SO, STO, ST, SJO, SJT, or SJTO listed in Article 400, NFPA No. 70, National Electric Code;

(3) A conductor that meets IEEE Standard 45.

(4) A conductor that meets UL Standard 1426.

(b) Where the nominal circuit voltage of each of three or more current carrying conductors in a duct, bundle, or cable is 50 volts or more, the amperages of each of those conductors must not exceed the value in table 5 multiplied by the correction factor in note 2 to Table 5 for the number of conductors that carry 50 volts or more.

(c) This section does not apply to communication systems; electronic navigation equipment; resistance conductors that control circuit amperage; conductors in secondary circuits of ignition systems; and pigtails of less than seven inches of exposed length.

[CGD 73–217, 42 FR 5944, Jan. 31, 1977; 42 FR 24739, May 16, 1977, as amended by CGD 80–047 and CGD 80–046, 45 FR 85450, Dec. 29, 1980; CGD 87–009, 53 FR 36972, Sept. 23, 1988]

§ 183.440 Secondary circuits of ignition systems.

(a) Each conductor in a secondary circuit of an ignition system must meet SAE Standard J557.

(b) The connection of each ignition conductor to a spark plug, coil, or distributor must have a tight fitting cap, boot, or nipple.

[CGD 73–217, 42 FR 5944, Jan. 31, 1977, as amended by USCG–1999–5832, 64 FR 34716, June 29, 1999]

§ 183.445 Conductors: Protection.

(a) Each conductor or group of conductors that passes through a bulkhead, structural member, junction box, or other rigid surface must be protected from abrasion.

(b) Each ungrounded terminal or stud that is continuously energized must meet § 183.455 or must have a boot, nipple, cap, cover, or shield that prevents accidental short-circuiting at the terminals or studs.

[CGD 81–092, 48 FR 55736, Dec. 15, 1983]

§ 183.455 Overcurrent protection: General.

(a) Each ungrounded current-carrying conductor must be protected by a manually reset, tripfree circuit breaker or fuse.

(b) A manually reset, trip-free circuit breaker or fuse must be placed at the source of power for each circuit or conductor except:

(1) If it is physically impractical to place the circuit breaker or fuse at the source of power, it may be placed within seven inches of the source of power for each circuit or conductor measured along the conductor.

(2) If it is physically impractical to place the circuit breaker or fuse at or within seven inches of the source of power, it may be placed within 40 inches of the source of power for each circuit or conductor, measured along

the conductor, if the conductor is contained throughout its entire distance between the source of power and the required circuit breaker or fuse in a sheath or enclosure such as a junction box, control box, or enclosed panel.

(c) The current rating of each circuit breaker or fuse must not exceed:

(1) For circuits of less than 50 volts, 150% of the value of the amperage in Table 5 for the conductor size it is protecting; and

(2) For circuits of 50 volts or more, the value of the amperage in Table 5 for the conductor size it is protecting. If this value does not correspond to a standard size or rated circuit breaker or fuse the next larger size or rated circuit breaker or fuse may be used if it does not exceed 150% of the allowed current capacity of the conductor.

(d) The voltage rating of each circuit breaker or fuse must not be less than the nominal circuit voltage of the circuit it is protecting.

(e) This section does not apply to resistance conductors that control circuit amperage; conductors in secondary circuits of ignition systems; pigtails of less than seven inches of exposed length; and power supply conductors in cranking motor circuits.

[CGD 73–217, 42 FR 5944, Jan. 31, 1977, as amended by CGD 78–090, 44 FR 68466, Nov. 29, 1979]

§ 183.460 Overcurrent protection: Special applications.

(a) Each ungrounded output conductor from a storage battery must have a manually reset, trip-free circuit breaker or fuse, unless the output conductor is in the main power feed circuit from the battery to an engine cranking motor. The circuit breaker or fuse must be within 72 inches of the battery measured along the conductor, unless, for boats built prior to August 1, 1985, the circuit has a switch that disconnects the battery.

(b) Each ungrounded output conductor from an alternator or generator, except for self-limiting alternators or generators, must have a circuit breaker or fuse that has a current rating that does not exceed 120 percent of the maximum rated current of the alternator or generator at 60 °C.

[CGD 73–217, 42 FR 5944, Jan. 31, 1977, as amended by CGD 81–092, 48 FR 55736, Dec. 15, 1983]

Subpart J—Fuel Systems

SOURCE: CGD 74–209, 42 FR 5950, Jan. 31, 1977, unless otherwise noted.

GENERAL

§ 183.501 Applicability.

(a) This subpart applies to all boats that have gasoline engines, except outboard engines, for electrical generation, mechanical power, or propulsion.

(b) [Reserved]

[CGD 74–209, 42 FR 5950, Jan. 31, 1977, as amended by CGD 81–092, 48 FR 55736, Dec. 15, 1983; USCG–1999–5832, 64 FR 34716, June 29, 1999]

§ 183.505 Definitions.

As used in this subpart:

Flame arrestor means a device or assembly that prevents passage of flame through a fuel vent.

Fuel system means the entire assembly of the fuel fill, vent, tank, and distribution components, including pumps, valves, strainers, carburetors, and filters.

Static floating position means the attitude in which a boat floats in calm water, with each fuel tank filled to its rated capacity, but with no person or item of portable equipment on board.

[CGD 74–209, 42 FR 5950, Jan. 31, 1977, as amended by CGD 85–098, 52 FR 19728, May 27, 1987]

§ 183.507 General.

Each fuel system component on a boat to which this subpart applies must meet the requirements of this subpart unless the component is part of an outboard engine or is part of portable equipment.

EQUIPMENT STANDARDS

§ 183.510 Fuel tanks.

(a) Each fuel tank in a boat must have been tested by its manufacturer

under § 183.580 and not leak when subjected to the pressure marked on the tank label under § 183.514(b)(5).

(b) Each fuel tank must not leak if subjected to the fire test under § 183.590. Leakage is determined by the static pressure test under § 183.580, except that the test pressure must be at least one-fourth PSIG.

(c) Each fuel tank of less than 25 gallons capacity must not leak if tested under § 183.584.

(d) Each fuel tank with a capacity of 25 to 199 gallons must not leak if tested under § 183.586.

(e) Each fuel tank of 200 gallons capacity or more must not leak if tested under §§ 183.586 and 183.588.

[CGD 74–209, 42 FR 5950, Jan. 31, 1977, as amended by CGD 81–092, 48 FR 55736, Dec. 15, 1983]

§ 183.512 Fuel tanks: Prohibited materials.

(a) A fuel tank must not be constructed from terneplate.

(b) Unless it has an inorganic sacrificial galvanic coating on the inside and outside of the tank, a fuel tank must not be constructed from black iron or carbon steel.

(c) A fuel tank encased in cellular plastic or in fiber reinforced plastic must not be constructed from a ferrous alloy.

[CGD 74–209, 42 FR 5950, Jan. 31, 1977; 42 FR 24739, May 16, 1977]

§ 183.514 Fuel tanks: Labels.

(a) Each fuel tank must have a label that meets the requirements of paragraphs (b) through (d) of this section.

(b) Each label required by paragraph (a) of this section must contain the following information:

(1) Fuel tank manufacturer's name (or logo) and address.

(2) Month (or lot number) and year of manufacture.

(3) Capacity in U.S. gallons.

(4) Material of construction.

(5) The pressure the tank is designed to withstand without leaking.

(6) Model number, if applicable.

(7) The statement, ''This tank has been tested under 33 CFR 183.510(a).''

(8) If the tank is tested under § 183.584 at less than 25g vertical accelerations the statement, ''Must be installed aft of the boat's half length.''

(c) Each letter and each number on a label must:

(1) Be at least 1/16 inch high and

(2) Contrast with the basic color of the label or be embossed on the label.

(d) Each label must:

(1) Withstand the combined effects of exposure to water, oil, salt spray, direct sunlight, heat, cold, and wear expected in normal operation of the boat, without loss of legibility; and

(2) Resist efforts to remove or alter the information on the label without leaving some obvious sign of such efforts.

[CGD 74–209, 42 FR 5950, Jan. 31, 1977, as amended by CGD 81–092, 48 FR 55737, Dec. 15, 1983; USCG–1999–5832, 64 FR 34716, June 29, 1999]

§ 183.516 Cellular plastic used to encase fuel tanks.

(a) Cellular plastic used to encase metallic fuel tanks must:

(1) Not change volume by more than five percent or dissolve after being immersed in any of the following liquids for 24 hours at 29 °C:

(i) Reference fuel B ASTM D–471.

(ii) No. 2 reference oil of ASTM D–471.

(iii) Five percent solution of trisodium phosphate in water; and

(2) Not absorb more than 0.12 pound of water per square foot of cut surface, measure under Military Specification MIL P–21929B.

(b) Non-polyurethane cellular plastic used to encase metallic fuel tanks must have a compressive strength of at least 60 pounds per square inch at ten percent deflection measured under ASTM D–1621, ''Compressive Strength of Rigid Cellular Plastics''.

(c) Polyurethane cellular plastic used to encase metallic fuel tanks must have a density of at least 2.0 pounds per cubic foot, measured under ASTM D–1622, ''Apparent Density of Rigid Cellular Plastics.''

[CGD 74–209, 42 FR 5950, Jan. 31, 1977, as amended by CGD 77–98, 42 FR 36253, July 14, 1977; CGD 81–092, 48 FR 55737, Dec. 15, 1983]

§ 183.518 Fuel tank openings.

Each opening into the fuel tank must be at or above the topmost surface of the tank.

§183.520 Fuel tank vent systems.

(a) Each fuel tank must have a vent system that prevents pressure in the tank from exceeding 80 percent of the pressure marked on the tank label under §183.514(b)(5).

(b) Each vent must:

(1) Have a flame arrester that can be cleaned unless the vent is itself a flame arrestor; and

(2) Not allow a fuel overflow at the rate of up to two gallons per minute to enter the boat.

[CGD 74–209, 42 FR 5950, Jan. 31, 1977, as amended by CGD 77–98, 42 FR 36253, July 14, 1977]

§183.524 Fuel pumps.

(a) Each diaphragm pump must not leak fuel from the pump if the primary diaphragm fails.

(b) Each electrically operated fuel pump must not operate except when the engine is operating or when the engine is started.

(c) If tested under §183.590, each fuel pump, as installed in the boat, must not leak more than five ounces of fuel in 2½ minutes, inclusive of leaks from fuel line, fuel filter and strainer.

[CGD 74–209, 42 FR 5950, Jan. 31, 1977, as amended by CGD 77–98, 42 FR 36253, July 14, 1977]

§183.526 Carburetors.

(a) [Reserved]

(b) Each carburetor must not leak more than five cubic centimeters of fuel in 30 seconds when:

(1) The float valve is open;

(2) The carburetor is at half throttle; and

(3) The engine is cranked without starting; or

(4) The fuel pump is delivering the maximum pressure specified by its manufacturer.

(c) Each updraft and horizontal draft carburetor must have a device that:

(1) Collects and holds fuel that flows out of the carburetor venturi section toward the air intake;

(2) Prevents collected fuel from being carried out of the carburetor assembly by the shock wave of a backfire or by reverse air flow; and

(3) Returns collected fuel to the engine induction system after the engine starts,

[CGD 74–209, 42 FR 5950, Jan. 31, 1977, as amended by CGD 77–98, 42 FR 36253, July 14, 1977]

§183.528 Fuel stop valves.

(a) Each electrically operated fuel stop valve in a fuel line between the fuel tank and the engine must:

(1) Open electrically only when the ignition switch is on; and

(2) Operate manually.

(b) If tested in accordance with the fire test under §183.590, a fuel stop valve installed in a fuel line system requiring metallic fuel lines or ''USCG Type A1'' hose must not leak fuel.

[CGD 74–209, 42 FR 5950, Jan. 31, 1977, as amended by CGD 85–098, 52 FR 19728, May 27, 1987]

§183.530 Spud, pipe, and hose fitting configuration.

Except when used for a tank fill line, each spud, pipe, or hose fitting used with hose clamps must have:

(a) A bead;

(b) A flare; or

(c) A series of annular grooves or serrations no less than 0.015 inches deep, except a continuous helical thread, knurl, or groove.

[CGD 74–209, 42 FR 5950, Jan. 31, 1977, as amended by USCG–1999–5832, 64 FR 34716, June 29, 1999]

§183.532 Clips, straps, and hose clamps.

(a) Each clip, strap, and hose clamp must:

(1) Be made from a corrosion resistant material; and

(2) Not cut or abrade the fuel line.

(b) If tested in accordance with the fire test under §183.590, a hose clamp installed on a fuel line system requiring metallic fuel lines or ''USCG Type A1'' hose must not separate under a one pound tensile force.

[CGD 74–209, 42 FR 5950, Jan. 31, 1977, as amended by CGD 85–098, 52 FR 19728, May 27, 1987]

§183.534 Fuel filters and strainers.

If tested under §183.590, each fuel filter and strainer, as installed in the

boat, must not leak more than five ounces of fuel in 2½ minutes inclusive of leaks from the fuel pump and fuel line.

[CGD 77–98, 42 FR 36253, July 14, 1977]

§ 183.536 Seals and gaskets in fuel filters and strainers.

(a) [Reserved]

(b) Each gasket and each sealed joint in a fuel filter and strainer must not leak when subjected for 24 hours to a gasoline that has at least a 50 percent aromatic content at the test pressure marked on the fuel tank label.

[CGD 81–092, 48 FR 55737, Dec. 15, 1983]

§ 183.538 Metallic fuel line materials.

Each metallic fuel line connecting the fuel tank with the fuel inlet connection on the engine must:

(a) Be made of seamless annealed copper, nickel copper, or copper-nickel; and

(b) Except for corrugated flexible fuel line, have a minimum wall thickness of 0.029 inches.

§ 183.540 Hoses: Standards and markings.

(a) ''USCG Type A1'' hose means hose that meets the performance requirements of:

(1) SAE Standard J1527DEC85, Class 1 and the fire test in § 183.590; or

(2) Underwriters' Laboratories, Inc. (UL) Standard 1114.

(b) ''USCG Type A2'' hose means hose that meets the performance requirements of SAE Standard J1527DEC85, Class 2 and the fire test in § 183.590;

(c) ''USCG Type B1'' hose means hose that meets the performance requirements of SAE Standard J1527DEC85, Class 1.

(d) ''USCG Type B2'' hose means hose that meets the performance requirements of SAE Standard J1527DEC85, Class 2.

NOTE: SAE Class 1 hose has a permeation rating of 100 grams or less fuel loss per square meter of interior surface in 24 hours.

SAE Class 2 hose has a permeation rating of 300 grams or less fuel loss per square meter of interior surface in 24 hours.

(e) Each ''USCG Type A1,'' ''USCG Type A2,'' ''USCG Type B1,'' and ''USCG Type B2'' hose must be identified by the manufacturer by a marking on the hose.

(f) Each marking must contain the following information in English:

(1) The statement ''USCG TYPE (insert A1 or A2 or B1 or B2).''

(2) The year in which the hose was manufactured.

(3) The manufacturer's name or registered trademark.

(g) Each character must be block capital letters and numerals that are at least one eighth-inch high.

(h) Each marking must be permanent, legible, and on the outside of the hose at intervals of 12 inches or less.

[CGD 85–098, 52 FR 19728, May 27, 1987]

§ 183.542 Fuel systems.

(a) Each fuel system in a boat must have been tested by the boat manufacturer and not leak when subjected to the greater of the following pressures:

(1) Three pounds per square inch; or

(2) One and one-half times the pressure created in the lowest part of the fuel system when it is filled to the level of overflow with fuel.

(b) The test pressure shall be obtained with air or inert gas.

[CGD 81–092, 48 FR 55737, Dec. 15, 1983]

MANUFACTURER REQUIREMENTS

§ 183.550 Fuel tanks: Installation.

(a) Each fuel tank must not be integral with any boat structure or mounted on an engine.

(b) Each fuel tank must not move at the mounting surface more than onefourth inch in any direction.

(c) Each fuel tank must not support a deck, bulkhead, or other structural component.

(d) Water must drain from the top surface of each metallic fuel tank when the boat is in its static floating position.

(e) Each fuel tank support, chock, or strap that is not integral with a metallic fuel tank must be insulated from the tank surface by a nonmoisture absorbing material.

(f) Cellular plastic must not be the sole support for a metallic fuel tank.

(g) If cellular plastic is the sole support of a non-metallic fuel tank, the

cellular plastic must meet the requirements of § 183.516 (b) or (c).

(h) Each fuel tank labeled under § 183.514(b)(8) for installation aft of the boat's half length must be installed with its center of gravity aft of the boat's half length.

[CGD 74–209, 42 FR 5950, Jan. 31, 1977, as amended by CGD 81–092, 48 FR 55737, Dec. 15, 1983; USCG–1999–5832, 64 FR 34716, June 29, 1999]

§ 183.552 Plastic encased fuel tanks: Installation.

(a) Each fuel tank encased in cellular plastic foam or in fiber reinforced plastic must have the connections, fittings, and labels accessible for inspection and maintenance.

(b) If a metallic fuel tank is encased in cellular plastic or in fiber reinforced plastic, water must not collect between the plastic and the surface of the tank or be held against the tank by capillary action.

(c) If the plastic is bonded to the surface of a metallic fuel tank, the adhesive strength of the metal to the plastic bond must exceed the cohesive strength of the plastic.

§ 183.554 Fittings, joints, and connections.

Each fuel system fitting, joint, and connection must be arranged so that it can be reached for inspection, removal, or maintenance without removal of permanent boat structure.

§ 183.556 Plugs and fittings.

(a) A fuel system must not have a fitting for draining fuel.

(b) A plug used to service the fuel filter or strainer must have a tapered pipethread or be a screw type fitted with a locking device other than a split lock washer.

§ 183.558 Hoses and connections.

(a) Each hose used between the fuel pump and the carburetor must be ''USCG Type A1'' hose.

(b) Each hose used—

(1) For a vent line or fill line must be:

(i) ''USCG Type A1'' or ''USCG Type A2''; or

(ii) ''USCG Type B1'' or ''USCG Type B2'' if no more than five ounces of fuel is discharged in 2½ minutes when:

(A) The hose is severed at the point where maximum drainage of fuel would occur,

(B) The boat is in its static floating position, and

(C) The fuel system is filled to the capacity market on the tank label under § 183.514(b)(3).

(2) From the fuel tank to the fuel inlet connection on the engine must be:

(i) ''USCG Type A1''; or

(ii) ''USCG Type B1'' if no more than five ounces of fuel is discharged in 2½ minutes when:

(A) The hose is severed at the point where maximum drainage of fuel would occur,

(B) The boat is in its static floating position, and

(C) The fuel system is filled to the capacity marked on the tank label under § 183.514(b)(3).

(c) Each hose must be secured by:

(1) A swaged sleeve;

(2) A sleeve and threaded insert; or

(3) A hose clamp.

(d) The inside diameter of a hose must not exceed the actual minor outside diameter of the connecting spud, pipe, or fitting by more than the distance shown in Table 8.

TABLE 8

If minor outside diameter of the connecting spud, pipe, or fitting is—	The inside diameter of the hose must not exceed the minor outside diameter of the connecting spud, pipe, or hose fitting by more than the following distance:
Less than ⅜ in	0.020 in.
⅜ in. to 1 in	0.035 in.
Greater than 1 in	0.065 in.

[CGD 74–209, 42 FR 5950, Jan. 31, 1977, as amended by CGD 85–098, 52 FR 19728, May 27, 1987]

§ 183.560 Hose clamps: Installation.

Each hose clamp on a hose from the fuel tank to the fuel inlet connection on the engine, a hose between the fuel pump and the carburetor, or a vent line must:

(a) Be used with hose designed for clamps;

(b) [Reserved]

(c) Be beyond the bead, flare, or over the serrations of the mating spud, pipe, or hose fitting; and

(d) Not depend solely on the spring tension of the clamp for compressive force.

[CGD 74–209, 42 FR 5950, Jan. 31, 1977, as amended by CGD 81–092, 48 FR 55737, Dec. 15, 1983]

§ 183.562 Metallic fuel lines.

(a) Each metallic fuel line that is mounted to the boat structure must be connected to the engine by a flexible fuel line.

(b) Each metallic fuel line must be attached to the boat's structure within four inches of its connection to a flexible fuel line.

§ 183.564 Fuel tank fill system.

(a) Each fuel fill opening must be located so that a gasoline overflow of up to five gallons per minute for at least five seconds will not enter the boat when the boat is in its static floating position.

(b) Each hose in the tank fill system must be secured to a pipe, spud, or hose fitting by:

(1) A swaged sleeve;

(2) A sleeve and threaded insert; or

(3) Two adjacent metallic hose clamps that do not depend solely on the spring tension of the clamps for compressive force.

(c) Each hose clamp in the tank fill system must be used with a hose designed for clamps.

(d) Hose clamps used in the tank fill system must:

(1) Have a minimum nominal band width of at least one-half inch; and

(2) Be over the hose and the spud, pipe, or hose fitting.

[CGD 74–209, 42 FR 5950, Jan. 31, 1977, as amended by CGD 81–092, 48 FR 55737, Dec. 15, 1983]

§ 183.566 Fuel pumps: Placement.

Each fuel pump must be on the engine it serves or within 12 inches of the engine, unless it is a fuel pump used to transfer fuel between tanks.

§ 183.568 Anti-siphon protection.

Each fuel line from the fuel tank to the fuel inlet connection on the carburetor must:

(a) Be above the level of the tank top; or

(b) Have an anti-siphon device or an electrically operated fuel stop valve:

(1) At the tank withdrawal fitting; or

(2) Installed so the line from the fuel tank is above the top of the tank; or

(c) Provided that the fuel tank top is below the level of the carburetor inlet, be metallic fuel lines meeting the construction requirements of § 183.538 or ''USCG Type A1'' hose, with one or two manual shutoff valves installed as follows:

(1) Directly at the fuel tank connection arranged to be readily accessible for operation from outside of the compartment, and

(2) If the length of fuel line from the tank outlet to the engine inlet is greater than 12 feet, a manual shutoff valve shall be installed at the fuel inlet connection to the engine.

[CGD 74–209, 42 FR 5950, Jan. 31, 1977, as amended by CGD 81–092, 48 FR 55737, Dec. 15, 1983; CGD 85–098, 52 FR 19729, May 27, 1987]

§ 183.570 Fuel filters and strainers: Installation.

Each fuel filter and strainer must be supported on the engine or boat structure independent from its fuel line connections, unless the fuel filter or strainer is inside a fuel tank.

§ 183.572 Grounding.

Each metallic component of the fuel fill system and fuel tank which is in contact with fuel must be statically grounded so that the resistance between the ground and each metallic component of the fuel fill system and fuel tank is less than 100 ohms.

TESTS

§ 183.580 Static pressure test for fuel tanks.

A fuel tank is tested by performing the following procedures in the following order:

(a) Fill the tank with air or inert gas to the pressure marked on the tank label under § 183.514(b)(5).

(b) Examine each tank fitting and seam for leaks using a leak detection method other than the pressure drop method.

[CGD 74–209, 42 FR 5950, Jan. 31, 1977, as amended by CGD 81–092, 48 FR 55737, Dec. 15, 1983]

§ 183.584 Shock test.

A fuel tank is tested by performing the following procedures in the following order:

(a) Perform the static pressure test under § 183.580.

(b) If the tank is non-metallic, fill it to capacity with a gasoline that has at least a 50 percent aromatic content. Keep the fuel in the tank at 21 °C or higher for 30 days prior to testing.

(c) Mount the tank to the platform of an impact test machine.

(d) Fill the tank to capacity with water.

(e) Apply one of the following accelerations within three inches of the center of the horizontal mounting surface of the tank. The duration of each vertical acceleration pulse is measured at the base of the shock envelope.

(1) If the tank is not labeled under § 183.514(b)(8) for installation aft of the half length of the boat, apply 1000 cycles of 25g vertical accelerations at a rate of 80 cycles or less per minute. The duration of the acceleration pulse must be between 6 and 14 milliseconds.

(2) If the tank is manufactured for installation with its center of gravity aft of the half length of the boat, apply 1000 cycles of 15g vertical accelerations at a rate of 80 cycles or less per minute. The duration of the shock pulse must be between 6 and 14 milliseconds.

(f) Perform the static pressure test under § 183.580.

[CGD 74–209, 42 FR 5950, Jan. 31, 1977, as amended by USCG–1999–5832, 64 FR 34716, June 29, 1999]

§ 183.586 Pressure impulse test.

A fuel tank is tested by performing the following procedures in the following order:

(a) Perform the static pressure test under § 183.580.

(b) If the tank is non-metallic, fill it to capacity with a gasoline that has at least a 50 percent aromatic content. Keep the fuel in the tank at 21 °C or higher for 30 days prior to testing.

(c) Mount the tank on a test platform.

(d) Fill the tank to capacity with water.

(e) Cap and seal each opening in the tank.

(f) Apply 25,000 cycles of pressure impulse at the rate of no more than 15 impulses per minute varying from zero to three PSIG to zero inside the tank top from a regulated source of air, inert gas, or water.

(g) Perform the static pressure test under § 183.580.

§ 183.588 Slosh test.

A fuel tank is tested by performing the following procedures in the following order:

(a) Perform the static pressure test under § 183.580.

(b) Perform the pressure impulse test under § 183.586.

(c) Secure the tank to the platform of a tank rocker assembly.

(d) Fill the tank to one-half capacity with water.

(e) Cap and seal each opening in the tank.

(f) Apply 500,000 cycles or rocking motion 15 degrees to each side of the tank centerline at the rate of 15 to 20 cycles a minute. The axis of rotation of the rocker and fuel tank must be perpendicular to the centerline of the tank length at a level six inches or less above or below the tank's bottom.

(g) Perform the static pressure test under § 183.580.

[CGD 74–209, 42 FR 5950, Jan. 31, 1977, as amended by USCG–1999–5832, 64 FR 34716, June 29, 1999]

§ 183.590 Fire test.

(a) A piece of equipment is tested under the following conditions and procedures:

(1) Fuel stop valves, ''USCG Type A1'' or USCG Type A2'' hoses and hose clamps are tested in a fire chamber.

(2) Fuel filters, strainers, and pumps are tested in a fire chamber or as installed on the engine in the boat.

(3) Fuel tanks must be tested filled with fuel to one-fourth the capacity marked on the tank in a fire chamber or in an actual or simulated hull section.

(b) Each fire test is conducted with free burning heptane and the component must be subjected to a flame for 2½ minutes.

(c) If the component is tested in a fire chamber:

(1) The temperature within one inch of the component must be at least 648 °C sometime during the 2½ minute test;

(2) The surface of the heptane must be 8 to 10 inches below the component being tested; and

(3) The heptane must be in a container that is large enough to permit the perimeter of the top surface of the heptane to extend beyond the vertical projection of the perimeter of the component being tested.

(d) If the component is being tested as installed on an engine, heptane sufficient to burn 2½ minutes must be poured over the component and allowed to run into a flat bottomed pan under the engine. The pan must be large enough to permit the perimeter of the top surface of the heptane to extend beyond the vertical projection of the perimeter of the engine.

(e) If a fuel tank is being tested in an actual or simulated hull section, the actual or simulated hull section must be of sufficient size to contain enough heptane to burn for 2½ minutes in a place adjacent to the tank.

[CGD 74–209, 42 FR 5950, Jan. 31, 1977, as amended by CGD 77–98, 42 FR 36253, July 14, 1977; CGD 85–098, 52 FR 19729, May 27, 1987]

Subpart K—Ventilation

SOURCE: CGD 76–082, 44 FR 73027, Dec. 17, 1979, unless otherwise noted.

§ 183.601 Applicability.

This subpart applies to all boats that have gasoline engines for electrical generation, mechanical power, or propulsion.

[USCG–1999–5832, 64 FR 34716, June 29, 1999]

§ 183.605 Definitions.

As used in this subpart:

''Fuel'' means gasoline.

''Open to the atmosphere'' means a compartment that has at least 15 square inches of open area directly exposed to the atmosphere for each cubic foot of net compartment volume.

[CGD 76–082, 44 FR 73027, Dec. 17, 1979, as amended by CGD 85–098, 52 FR 19729, May 27, 1987]

§ 183.607 Incorporation by reference.

(a) The following standards are incorporated by reference. Copies may be obtained from the sources indicated. They are also available for inspection at Coast Guard Headquarters, Room 4210, 2100 Second Street, SW., Washington, DC 20593 and at the Office of the Federal Register Library, 800 North Capitol Street, NW., suite 700, Washington, DC 20408.

(1) AMCA Standard 210–74, Figure 12. Air Moving and Conditioning Association, 30 West University Drive, Arlington Heights, Illinois 60004.

(2) ASTM Standard D–471. American Society for Testing and Materials, 1916 Race Street, Philadelphia, Pennsylvania 19103.

(3) UL Standard 1128. Underwriters Laboratories, Incorporated, 207 Ohio Street, Chicago, Illinois 60611.

(b) The Director of the Federal Register approved the incorporation by reference in paragraph (a)(2) on September 26, 1976 and the incorporations in paragraphs (a) (1) and (3) on March 24, 1978.

[CGD 76–082, 44 FR 73027, Dec. 17, 1979, as amended by CGD 82–010, 48 FR 8273, Feb. 28, 1983]

§ 183.610 Powered ventilation system.

(a) Each compartment in a boat that has a permanently installed gasoline engine with a cranking motor must:

(1) Be open to the atmosphere, or

(2) Be ventilated by an exhaust blower system.

(b) Each exhaust blower or combination of blowers must be rated at an air flow capacity not less than that computed by the formulas given in Table 183.610, Column 2. Blower rating must be determined according to AMCA Standard 210–74, Figure 12, or UL Standard 1128.

TABLE 183.610

Col. 1 [1]	Col. 2 [2]	Col. 3 [3]
Below 34	Fr=50	Fo=20
34 to 100	Fr=1.5V	Fo=0.6V
Over 100	Fr=V/2+100	Fo=0.2V+40

[1] Net compartment volume of engine compartment and compartments open thereto (V) cubic feet.
[2] Rated blower capacity (Fr) cubic feet per minute.
[3] Blower system output (Fo) cubic feet per minute.

(c) Each exhaust blower system required by paragraph (a)(2) of this section must exhaust air from the boat at a rate which meets the requirements of Table 183.610, Column 3 when the engine is not operating.

(d) Each intake duct for an exhaust blower must be in the lower one-third of the compartment and above the normal level of accumulated bilge water.

(e) More than one exhaust blower may be used in combination to meet the requirements of this section.

(f) Each boat that is required to have an exhaust blower must have a label that:

(1) Is located as close as practicable to each ignition switch;

(2) Is in plain view of the operator; and

(3) Has at least the following information:

WARNING—GASOLINE VAPORS CAN EXPLODE. BEFORE STARTING ENGINE OPERATE BLOWER FOR 4 MINUTES AND CHECK ENGINE COMPARTMENT BILGE FOR GASOLINE VAPORS.

§ 183.620 Natural ventilation system.

(a) Except for compartments open to the atmosphere, a natural ventilation system that meets the requirements of § 183.630 must be provided for each compartment in a boat that:

(1) Contains a permanently installed gasoline engine;

(2) Has openings between it and a compartment that requires ventilation, where the aggregate area of those openings exceeds 2 percent of the area between the compartments, except as provided in paragraph (c) of this section;

(3) Contains a permanently installed fuel tank and an electrical component that is not ignition protected in accordance with § 183.410(a);

(4) Contains a fuel tank that vents into that compartment; or

(5) Contains a non-metallic fuel tank:

(i) With an aggregate permeability rate exceeding 1.2 grams of fuel loss in 24 hours per cubic foot of net compartment volume, or

(ii) If the net compartment volume is less than one cubic foot, having a permeability rate exceeding 1.2 grams of fuel loss in 24 hours.

NOTE: Reference fuel ''C'' at 40 degrees Celsius plus or minus 2 degrees Celsius from ASTM standard D–471–1979 is to be used in determining the permeability rate.

(b) Each supply opening required in § 183.630 must be located on the exterior surface of the boat.

(c) An accommodation compartment above a compartment requiring ventilation that is separated from the compartment requiring ventilation by a deck or other structure is excepted from paragraph (a)(2) of this section.

[CGD 76–082, 44 FR 73027, Dec. 17, 1979, as amended by CGD 76–082(a), 46 FR 27645, May 21, 1981; CGD 85–059, 51 FR 37577, Oct. 23, 1986; USCG–1999–5832, 64 FR 34716, June 29, 1999]

§ 183.630 Standards for natural ventilation.

(a) For the purpose of § 183.620, ''natural ventilation'' means an airflow in a compartment in a boat achieved by having:

(1) A supply opening or duct from the atmosphere or from a ventilated compartment or from a compartment that is open to the atmosphere; and

(2) An exhaust opening into another ventilated compartment or an exhaust duct to the atmosphere.

(b) Each exhaust opening or exhaust duct must originate in the lower third of the compartment.

(c) Each supply opening or supply duct and each exhaust opening or exhaust duct in a compartment must be above the normal accumulation of bilge water.

(d) Except as provided in paragraph (e) of this section, supply openings or supply ducts and exhaust openings or exhaust ducts must each have a minimum aggregate internal cross-sectional area calculated as follows:

$A=5 \ln (V/5)$;

where:

(1) A is the minimum aggregate internal cross-sectional area of the openings or ducts in square inches;

(2) V is the net compartment volume in cubic feet, including the net volume of other compartments connected by openings that exceed 2 percent of the area between the compartments; and

(3) ln (V/5) is the natural logarithm of the quantity (V/5).

(e) The minimum internal cross-sectional area of each supply opening or

duct and exhaust opening or duct must exceed 3.0 square inches.

(f) The minimum internal cross-sectional area of terminal fittings for flexible ventilation ducts installed to meet the requirements of paragraph (d) of this section must not be less than 80 percent of the required internal cross-sectional area of the flexible ventilation duct.

[CGD 76–082, 44 FR 73027, Dec. 17, 1979; 45 FR 7544, Feb. 4, 1980]

Subpart L—Start-in-Gear Protection

SOURCE: CGD 79–137, 46 FR 3515, Jan. 15, 1981, unless otherwise noted.

§ 183.701 Applicability.

This subpart applies to outboard motors and starting controls, and to manufacturers, distributors or dealers installing such equipment.

[USCG–1999–5832, 64 FR 34716, June 29, 1999]

§ 183.705 Definitions.

For the purposes of this subpart:

(a) *Outboard motor* means a self-contained propulsion system of any horsepower rating designed to be installed on, and removable from the transom of a boat.

(b) *Static thrust* means the forward or backward thrust developed by an outboard motor and associated propulsion unit while stationary.

(c) *Starting control* means the motor throttle, shift and starting control mechanisms located at a position remote from the outboard motor.

(d) *Local starting* means operating a mechanical or electrical starting device built into the outboard motor.

(e) *Distributor* means any person engaged in the sale and distribution of boats or associated equipment for the purpose of resale.

(f) *Dealer* means any person who is engaged in the sale and distribution of boats or associated equipment to purchasers who the seller in good faith believes to be purchasing any such boat or associated equipment for purposes other than resale.

§ 183.710 Start-in-gear protection required.

(a) Any outboard motor which is capable of developing a static thrust of 115 pounds or more at any motor operating speed with any propeller or jet attachment recommended for or shipped with the motor by the manufacturer, must be equipped with a device to prevent the motor being started when controls are set so as to attain that thrust level, as follows:

(1) Outboard motors designed for local starting must have a built-in start-in-gear protection device.

(2) Outboard motors designed for remote starting must have either a built-in start-in-gear protection device or be installed with remote starting controls containing this device. An outboard motor designed for remote starting that does not have a built-in start-in-gear protection device must, at the time of sale, have a tag or label attached at the location of the control connection, containing the following information: ''Starting controls installed with this motor must comply with USCG requirements for start-in-gear protection in 33 CFR Part 183, Subpart L.'' The letters and numbers on the tag or label must be at least ⅛ inch high.

(b) Starting controls must have a tag or label with the following information to indicate whether or not they have been equipped with a start-in-gear protection device: ''This control will (or will not) provide start-in-gear protection meeting USCG requirements of 33 CFR Part 183, Subpart L.'' The letters and numbers on the tag or label must be at least ⅛ inch high.

(c) Any manufacturer, distributor or dealer installing an outboard motor displaying the label described in paragraph (a)(2) of this section must properly match it with a compatible starting control that contains a start-in-gear protection device.

§ 183.715 Exception.

Outboard motors designed to be equipped for remote starting, but which also have a provision for local starting in emergencies, need not comply with § 183.710 for their local starting system. However, the following information must be displayed on the

motor: ''Warning—Ensure shift control is in neutral before starting motor''. This information must be clearly visible to a person using the emergency starting device.

Subpart M–N [Reserved]

PARTS 184–186 [RESERVED]

PART 187—VESSEL IDENTIFICATION SYSTEM

Subpart A—General

Sec.
187.1 Applicability.
187.3 Definitions.
187.5 Vessel identifier.
187.7 Participation procedures.
187.9 Procedures for certification of compliance with guidelines for State vessel titling systems.

Subpart B—Information To Be Collected by Participating States

187.101 Information to identify a vessel owner.
187.103 Information to identify a vessel.
187.105 Information on titled vessels.
187.107 Information to assist law enforcement officials.

Subpart C—Vessel Identification System Participation Requirements

187.201 Participating State requirements.
187.203 Voluntary provisions for participating States.

Subpart D—Guidelines for State Vessel Titling Systems

187.301 Eligibility for preferred mortgage status.
187.303 Definitions.
187.305 Application for title.
187.307 Dealer and manufacturer provisions.
187.309 Transfer of title.
187.311 Transfer by operation of law.
187.313 Title of another State.
187.315 Surrender of title for purposes of documentation.
187.317 Information on a certificate of title.
187.319 Duplicate title.
187.321 Hull identification number (HIN) provisions.
187.323 Perfection of security interests.
187.325 Assignments.
187.327 Satisfaction of a security interests.
187.329 Forms.
187.331 Retaining information.
APPENDIX A TO PART 187—PARTICIPATING AUTHORITIES
APPENDIX B TO PART 187—PARTICIPATING AND CERTIFIED TITLING AUTHORITIES

AUTHORITY: 46 U.S.C. 2103; 49 CFR 1.46.

SOURCE: CGD 89–050, 60 FR 20315, Apr. 25, 1995, unless otherwise noted.

Subpart A—General

§187.1 Applicability.

(a) This part establishes minimum requirements for States electing to participate in the vessel identification system (VIS) established under 46 U.S.C. chapter 125. This part also prescribes guidelines for State vessel titling systems and the procedures for obtaining certification of compliance with those guidelines for those States electing to establish titling systems to support preferred mortgages.

(b) This part applies only to vessels numbered or titled under the laws of a State. It does not apply to vessels documented under 46 U.S.C. chapter 121 and the regulations in 46 CFR parts 67 and 68.

§187.3 Definitions.

The following definitions apply to terms used in this part.

Certificate of Origin (COO) means a document establishing the initial chain of ownership, such as manufacturer's certificate of origin (MCO) or statement of origin (MSO), importer's certificate of origin (ICO) or statement of origin (ISO), and builder's certification (Form CG–1261; see 46 CFR part 67).

Commandant means the Commandant of the United States Coast Guard.

Dealer means any person who engages wholly or in part in the business of buying, selling, or exchanging new or used vessels, or both, either outright or on conditional sale, bailment, lease, chattel mortgage or otherwise, and who has an established place of business for the sale, trade, and display of such vessels.

Department or *division* means the State agency designated to issue certificates of number or title, or both for vessels, and its duly authorized representatives.

Documented vessel means a vessel documented under 46 U.S.C. chapter 121.

HIN means the hull identification number assigned to an undocumented

vessel in accordance with subpart C of part 181 of this subchapter.

Issuing authority means a State that has a numbering system approved by the Coast Guard or the Coast Guard where a State numbering system has not been approved.

Lienholder means a person holding a security interest.

Manufacturer means any person engaged in the business of manufacturing or importing new vessels for the purpose of sale or trade.

Owner means a person who claims lawful possession of a vessel by virtue of legal title or equitable interest in it that entitles that person to such possession.

Participating State means a State that has elected to participate in VIS and has been certified as complying with the participation requirements in subpart C of this part. Certified States participating in VIS are listed in Appendix A of this part.

Person means an individual, firm, partnership, corporation, company, association, joint-stock association, or governmental entity and includes a trustee, receiver, assignee, or similar representative of any of them.

Security interest means an interest that is reserved or created by an agreement and that secures payment or performance of an obligation and is valid against third parties generally.

State means a State of the United States, Guam, Puerto Rico, the Virgin Islands, American Samoa, the District of Columbia, the Northern Mariana Islands, and any other territory or possession of the United States.

Titled vessel means a vessel titled in accordance with the laws of a State.

Titling authority means a State whose vessel titling system has been certified by the Coast Guard as complying with the guidelines for State vessel titling systems listed in this part. Titling authorities participating in VIS are listed in Appendix B of this part.

Vessel includes every description of watercraft other than a seaplane on the water, used or capable of being used, as a means of transportation on water.

§ 187.5 Vessel identifier.

(a) The vessel identifier is the hull identification number (HIN) assigned to an undocumented vessel in accordance with subpart C of part 181 of this subchapter. The vessel identifier for a documented vessel is the official number assigned by the Coast Guard in accordance with 46 U.S.C. chapter 121.

(b) If the vessel does not have an HIN, the vessel identifier for vessels subject to the numbering requirements of parts 173 and 174 of this subchapter is the number issued on a certificate of number by the issuing authority for the State in which the vessel is principally operated.

(c) If a vessel subject to the numbering requirements of parts 173 and 174 of this subchapter is transferred to a new owner, or the vessel is required to be numbered in a new State of principal operation, or application for a title is made, a hull identification number meeting the format requirements of § 181.25 shall be assigned by the issuing authority for the State in which the vessel is principally operated in accordance with the State's established procedures if the vessel does not have a valid HIN.

§ 187.7 Participation procedures.

(a) To participate in VIS, a State official within the department must submit a written request to the Commandant (G–OPB) and certify that the State will comply with the VIS participation requirements in subpart C of this part.

(b) Appendix A of this part lists those States that have elected to participate in VIS and comply with the participation requirements prescribed in this part. A State will remain listed in Appendix A of this part as long as it continues to comply with the participation requirements in subpart C of this part.

[CGD 89–050, 60 FR 20315, Apr. 25, 1995, as amended by CGD 96–026, 61 FR 33670, June 28, 1996]

§ 187.9 Procedures for certification of compliance with guidelines for State vessel titling systems.

(a) Under 46 U.S.C. 31322(d), a mortgage or instrument perfected under State law for a vessel titled under the

law of a participating State is deemed to be a preferred mortgage if the State has been certified as complying with the guidelines in subpart D of this part.

(b) To obtain certification of compliance with the State titling guidelines, a State official within the department must submit a written request along with a copy of the State's titling laws, regulations and administrative procedures, to the Commandant (G–OPB), and certify that the State will comply with the participation requirements in subpart C of this part.

(c) The Commandant will review the material, and, if the State complies with the guidelines provided in subpart D of this part, certify compliance.

(d) Appendix B of this part indicates those States that participate in VIS and, have been certified by the Commandant as complying with the guidelines prescribed in subpart D of this part and the date of that certification. A State with a vessel titling system that complies with the guidelines of subpart D of this part will remain listed, in Appendix B of this part.

[CGD 89–050, 60 FR 20315, Apr. 25, 1995, as amended by CGD 96–026, 61 FR 33670, June 28, 1996]

Subpart B—Information To Be Collected by Participating States

§ 187.101 Information to identify a vessel owner.

A participating State must collect the following information regarding the ownership of vessels numbered or titled under the laws of that State:

(a) Name of each owner.

(b) The address of the principal place of residence of at least one individual owner, or the address of the principal place of business of an owner that is not an individual, including zip code.

(c) Mailing address of at least one owner, if different from the address required by paragraph (b) of this section.

(d) If the owner is an individual, the owner's social security number, or, if that number is not available, the individual's birth date and driver's license number or, if the individual does not have a driver's license, the individual's birth date and other information to identify that individual as prescribed by the State or titling authority.

(e) If the owner is other than an individual, the owner's—

(1) Taxpayer identification number; or

(2) If the owner does not have a taxpayer identification number, the social security number, or if the social security number is not available, birth date and driver's license number, or if no driver's license number is available, the birth date and other identifying information prescribed by State regulation, of an individual who is a corporate officer, general partner, or individual trustee of the owner and who signed the application for numbering the vessel.

§ 187.103 Information to identify a vessel.

A participating State must collect the following information regarding the identity of a vessel numbered or titled under the laws of that State:

(a) Make of vessel or name of vessel builder, if known.

(b) Manufacture year, year vessel built, or vessel model year, if known.

(c) Vessel identifier required by § 187.5 of this part.

(d) Official number assigned by U.S. Coast Guard or predecessor agency, if applicable.

(e) Number currently assigned by the State issuing authority, as printed on the certificate of number.

(f) Length of vessel.

(g) Type of vessel (open, cabin, house, or other).

(h) Whether the hull is wood, fiberglass, metal, plastic, or other.

(i) Whether the propulsion is inboard, outboard, inboard-outdrive, sail, or other.

(j) Whether the fuel is gasoline, diesel, or other.

(k) Whether the vessel is operated for pleasure, rent or lease, dealer or manufacturer demonstration, commercial passenger carrying, commercial fishing, or other commercial operation.

(l) Number previously issued to the vessel by an issuing authority.

(m) Expiration date of certificate of number issued by the State vessel numbering authority.

§ 187.105 Information on titled vessels.

(a) In addition to the information required under § 187.103, a participating State must collect the following information on a vessel titled in that State:

(1) Title number issued by the State.

(2) Where evidence of a lien or other security interest may be found against a vessel titled in that State.

(3) Name(s) of the lienholder(s).

(4) Address of principal place of residence of each individual lienholder and the address of the principal place of business of each lienholder that is not an individual, including zip code.

(b) Participating States may collect the following information on titled vessels:

(1) Mailing address of any lienholder that is different from the addresses required by paragraph (a)(4) of this section.

(2) Telephone number of each lienholder.

§ 187.107 Information to assist law enforcement officials.

(a) Participating States must make the following information available to assist law enforcement officials:

(1) Notice that a vessel, identified by its vessel identifier, has been reported lost, stolen, destroyed, abandoned, or recovered.

(2) Name and telephone number of organization to contact for additional information or to notify regarding the recovery of a vessel.

(b) Participating States may make the following information available to assist law enforcement officials:

(1) Reported date that the vessel was stolen.

(2) Reported location of vessel when stolen.

(3) Vessel insurance policy number, if insured.

(4) Name of the insurance company.

(5) Address of insurance company, including zip code.

(6) Mailing address of the insurance company for notification, if different from the address provided under paragraph (b)(5) of this section.

(7) Telephone number of insurance company.

(8) Date that the vessel was recovered.

(9) Location of vessel when recovered.

(10) Name(s) and telephone number(s) of organization(s), in addition to the one provided under paragraph (a) of this section, public or private, to contact for additional information on sighting and recovery of vessels.

(11) Request to be notified if vessel is sighted.

(12) Purpose of sighting notification request.

(13) Date and time when vessel last sighted.

(14) Location of vessel when last sighted.

(15) Organization to contact for additional information on sighting.

Subpart C—Vessel Identification System Participation Requirements

§ 187.201 Participating State requirements.

A participating State must comply with the following requirements:

(a) Collect the required information listed in subpart B of this part and provide that information to the vessel identification system in the manner and form specified in the applicable Coast Guard-State Cooperative Agreement.

(b) Obtain specific evidence of ownership, such as certificate of origin or current certificate of title or number, to identify a vessel's owner.

(c) Return any surrendered Certificate of Documentation to the Coast Guard National Vessel Documentation Center.

(d) Retain previously issued certificate of number or title and notify issuing authority by mail or electronic message.

(e) Retain information identifying the type of evidence used to establish the accuracy of the information required to be made available to VIS, and make it available to the Coast Guard upon request.

(f) Update the information required to be made available to VIS on a vessel that has not been re-registered by labeling the vessel file ''inactive'' or, if notified that a vessel has been moved

to a nonparticipating State, by indicating the new State and notifying the Coast Guard.

[CGD 89–050, 60 FR 20315, Apr. 25, 1995, as amended by CGD 97–023, 62 FR 33365, June 19, 1997

§ 187.203 Voluntary provisions for participating States.

A participating State may—

(a) Provide VIS with the optional information listed in subpart B of this part;

(b) Make updated information provided by the vessel owner, government agency or lienholder, available to VIS regarding a vessel that has been moved to a nonparticipating State; and

(c) Interact with nonparticipating States to make information available to, or request information from, VIS concerning a vessel or nationwide statistics.

Subpart D—Guidelines for State Vessel Titling Systems

EFFECTIVE DATE NOTE: At 61 FR 6943, Feb. 23, 1996, subpart D is suspended through April 23, 1998. At 63 FR 19658, Apr. 21, 1998, the effective date of subpart D was further delayed until Apr. 24, 1999. At 64 FR 19039, Apr. 19, 1999, the effective date of subpart D was further delayed until Oct. 24, 1999.

§ 187.301 Eligibility for preferred mortgage status.

A State vessel titling system that meets the requirements of this subpart may be certified by the Commandant under 46 U.S.C. 31322 (d)(1)(A), in accordance with the procedures of § 187.9, as complying with the guidelines for vessel titling systems for the purpose of conveying preferred mortgage status on mortgages perfected after the date of certification, covering the whole of a vessel titled in that State, provided that the State also complies with the vessel identification system participation requirements of § 187.7 and subpart C of this part.

§ 187.303 Definitions.

A State must define the terms, ''certificate of origin'', ''dealer'', ''department'' or ''division'', ''documented vessel'', ''issuing authority'', ''lienholder'', ''manufacturer'', ''owner'', ''person'', ''security interest'', ''titling authority'', and ''vessel'', substantially as those terms are defined in § 187.3.

§ 187.305 Application for title.

(a) Except as provided in § 187.307, a State must require application for a title within a specified period of time, not to exceed 60 days, after a vessel is first purchased, ownership is transferred, or there is a change in vessel data listed on the certificate of title.

(b) A State must require disclosure of the existence of indebtedness covered by any security agreement pertaining to the vessel in its titling application form.

(c) The title application must include an entry for identification of the State or country in which the vessel was last numbered or titled, if applicable.

(d) A State must require that the title application include a signed certification that statements made are true and correct to the best of the applicant's knowledge, information and belief, under penalty of perjury.

§ 187.307 Dealer and manufacturer provisions.

A State must include the following provisions for dealers or manufacturers, building, buying, acquiring, or transferring vessels, in that State.

(a) Dealers must be required to either report acquisition of a used numbered vessel for resale, or, apply for certificate of title if such vessel is required to be titled.

(b) Dealers must be allowed to apply for a certificate of title for a new vessel acquired for resale.

(c) Dealers and manufacturers must be required to provide to the vessel owner a certificate of origin, or other document, at the time of delivery of a new vessel to initiate the chain of ownership.

(d) Dealers and manufacturers must be required to maintain for at least 3 years a record of any vessel bought, sold, exchanged, or received for sale or exchange, and have such records open for inspection by the State.

§ 187.309 Transfer of title.

Except for transfers by operation of law such as inheritance, order in bankruptcy, replevin, default judgment or execution sale, a State must require that to complete the sale, assignment or transfer of a titled vessel, a manufacturer, dealer or individual, must deliver the vessel's certificate of title to the new owner.

§ 187.311 Transfer by operation of law.

A State must require a new owner to apply for a certificate of title within a specified period of time, not to exceed 60 days, if ownership of a vessel is transferred by operation of law, such as inheritance, order in bankruptcy, replevin, default judgment or execution sale, and to include an original or certified copy of the legal transfer document along with the application.

§ 187.313 Title of another State.

A State must provide for honoring a current and valid title issued by another State, or a Certificate of Ownership issued by the Coast Guard, as proof of ownership for transfer or sale of a vessel, and for applying for certificates of number or title in a new State of principal operation.

§ 187.315 Surrender of title for purposes of documentation.

A State must deem a title issued by that State as invalid when a vessel owner surrenders it to the U.S. Coast Guard for vessel documentation purposes. Upon receipt of a title from the U.S. Coast Guard, a State must accept the returned title for administrative processing and cancellation.

§ 187.317 Information on a certificate of title.

(a) A State must specify the following information on a certificate of title:

(1) Current owner(s) name(s).

(2) The address of the principal place of residence of an individual owner, and the address of the principal place of business of an owner that is not an individual, including zip code.

(3) Date of title issuance.

(4) Vessel description, including the vessel identification number required by § 187.05 of this part, name of manufacturer or model, year built or the model year, vessel length, vessel type, drive or propulsion type, vessel use, hull material and fuel type.

(5) Each lienholder's name and address.

(6) Recording or perfection date of new liens and original recording date of any liens outstanding.

(b) Space must be provided on the certificate of title form for assignment of interests in the vessel, with a certification that statements provided on the title assignment are true and correct to the best of the owner's knowledge, under penalty of perjury.

§ 187.319 Duplicate title.

(a) The term ''DUPLICATE'' must be clearly and permanently marked on the face of a duplicate certificate.

(b) A State must require the holder of an original title, whether the owner or lienholder, to apply for a duplicate title within a specified period of time after, or after the discovery of, the loss, theft, mutilation, or destruction of an original certificate of title; provide information concerning the original certificate and the circumstances of its loss, theft, mutilation, or destruction; and surrender to the department any recovered original title or remains.

§ 187.321 Hull identification number (HIN) provisions.

A State must—

(a) Assign an HIN and require that it be affixed to an undocumented vessel that does not have an HIN at the time of registration or application for title after transfer of ownership or change of State of principal operation;

(b) Assign an HIN to an undocumented vessel without an HIN at time of title application and record the HIN on the certificate of title; and

(c) Prohibit removal or alteration of an HIN without authorization from the Commandant.

§ 187.323 Perfection of security interests.

(a) A State must provide that a security interest is not valid under State law unless perfected under procedures specified by the State. If a vessel is already subject to a security interest

when it is brought into a State, the validity of the security interest is to be determined by the law of the jurisdiction where the vessel was titled when the security interest attached. The State must specify at least the following procedures.

(1) The procedures by which a security interest is perfected, including a requirement for the delivery of an application for new or amended certificate of title.

(2) The procedures by which the date of perfection is determined.

(b) The perfection provisions required to be established under paragraphs (a) and (b) of this section must not apply to—

(1) A lien given by statute or rule of law to a supplier of services or materials for the vessel;

(2) A lien given by statute to the United States, a State, or a political subdivision thereof; or

(3) Any lien arising out of an attachment of a vessel.

§ 187.325 Assignments.

A State must specify whether a security interest in a vessel titled under the State titling system may be assigned and the procedures for perfecting assignments.

§ 187.327 Satisfaction of security interests.

A State must specify evidence and information that lienholders are required to submit to the State regarding satisfaction of a security interest, and establish procedures and time limits for its submission.

§ 187.329 Forms.

A State must prescribe and provide the application, certificate of title, notice of security interests, and other forms needed to comply with the titling system provisions.

§ 187.331 Retaining information.

A State must retain information identifying the evidence used to establish the accuracy of the information required for vessel titling purposes for 3 years and make the information available to the Coast Guard on request.

APPENDIX A TO PART 187—PARTICIPATING AUTHORITIES

The following States comply with the requirements for participating in VIS:

[No States currently comply with the requirements for participating in VIS.]

APPENDIX B TO PART 187—PARTICIPATING AND CERTIFIED TITLING AUTHORITIES

The following States both comply with the requirements for participating in VIS and have a titling system certified to be in compliance with the guidelines for State vessel titling systems:

[No States currently have a certified titling system and participate in VIS.]

PARTS 188–199 [RESERVED]

INDEX TO SUBCHAPTER S—BOATING SAFETY

EDITORIAL NOTE: This listing is provided for informational purposes only. It is compiled and kept up-to-date by the Coast Guard, Department of Transportation.

Section

A

Action to correct an especially hazardous condition 177.05
Address of the Commandant 179.19
Appendix A to Part 173- Issuing Authorities and Reporting Authorities
Appendix A to Part 187- Participating Authorities
Appendix B to Part 187- Participating and Certified Titling Authorities
Applicability 174.1, 175.1, 187.1
Applicability and purpose 177.01, 181.1, 183.1
Approval procedure 174.7

B

Boats and associated equipment ..... Part 183

C

Casualty and Accident Reporting .....
  Applicability 173.51
  Casualty or accident report 173.55
  Immediate notification of death or disappearance 173.53
  Report of casualty or accident 173.55
  Where to report 173.59
Casualty Reporting System Requirements
  Administration 174.103
  Applicability of State casualty reporting system 174.101
  Contents of casualty or accident report form 174.107
  Owner or operator casualty reporting requirements 174.105
  State casualty reporting system optional sections 174.106
Contents of notification 179.09
Correction of especially hazardous conditions ..... Part 177

D

Defect notification ..... Part 179
Defects determined by the Commandant 179.11
Definitions 173.3, 174.3, 175.3, 177.03, 179.03, 181.3, 183.3, 187.3
Display of Capacity Information ..... Subpart F
  Applicability 183.21
  Capacity marking required 183.23
  Construction of markings 183.27
  Display of markings 183.25

E

Electrical Systems ..... Subpart I
  Applicability, effective dates, and purpose 183.401

Batteries 183.420
Conductors
In circuits of less than 50 volts 183.430
In circuits of 50 volts or more 183.435
Protection 183.445
Definitions 183.402
General 183.425
Grounding 183.415
Ignition protection 183.410
Overcurrent protection: General 183.455
Overcurrent protection: Special applications 183.460
Equipment requirements ..... Part 175
Exemptions and preemption 175.5

F

Flotation Requirements for Inboard Boats,
Inboard/Outdrive Boats, and Airboats ..... Part 183-Subpart F
Applicability 183.101
Definitions 183.110
Flotation material and air chambers 183.112
Quantity of flotation required 183.105
Test of flotation materials 183.114
Flotation Requirements for Outboard Boats Rated for
Engines of More Than 2 Horsepower ..... Part 183-Subpart G
Applicability 183.201
Flotation and certification requirements 183.202
Flotation material and air chambers 183.222
Flotation test for persons capacity 183.225
Level flotation test without weights for persons capacity 183.235
Passenger carrying area 183.205
Preconditioning for tests 183.220
Reference areas 183.210
Reference depth 183.215
Stability test 183.230
Flotation Requirements for Outboard Boats Rated Engines of 2 Horse-
power or Less ..... Part 183-Subpart H
Applicability 183.301
Flotation materials 183.322
Flotation requirements 183.302
Flotation test for persons capacity 183.325
Level flotation test without weights for persons capacity 183.335
Passenger carrying area 183.305
Preconditioning for tests 183.320
Reference areas 183.310
Reference depth 183.315
Stability test 183.330
Table 4 and Figures- Weights (Pounds) of Outboard Motor and Related
Equipment for Various Boat Horsepower Ratings .....
Follow-up report 179.15
Fuel Systems ..... Part 183-Subpart J
Anti-siphon protection 183.568
Applicability 183.501
Carburetors 183.526
Cellular plastic used to encase fuel tanks 183.516
Clips, straps, and hose clamps 183.532
Definitions 183.505
Fire test 183.590

Index

Fittings, joints, and connections 183.554
Fuel filters and strainers 183.534
Fuel filters and strainer: Installation 183.560
Fuel pumps 183.524
Fuel pumps: Placement 183.566
Fuel stop valves 183.528
Fuel Systems 183.542
Fuel Tanks 183.510
Fill system 183.564
Installation 183.550
Labels 183.514
Openings 183.518
Prohibited materials 183.512
Vent systems 183.520
General 183.507
Grounding 183.572
Hoses and connections 183.558
Hose clamps: Installation 183.560
Hoses: Standards and markings 183.540
Metallic fuel lines 183.562
Metallic fuel line materials 183.538
Plastic encased fuel tanks: Installation 183.552
Plug and fittings 183.556
Pressure impulse test 183.586
Seals and gaskets in fuel filters and strainers 183.536
Shock test 183.584
Slosh test 183.588
Spud, pipe, and hose fitting configuration 183.530
Static pressure test for fuel tanks 183.580

G

Guidelines for State Vessel Titling Systems ..... Part 187-Subpart D
Application for title 187.305
Assignments 187.325
Dealer and manufacturer provisions 187.307
Definitions 187.303
Duplicate title 187.319
Eligibility for preferred mortgage status 187.301
Forms 187.329
Hull identification number (HIN) provisions 187.321
Information on a certificate of title 187.317
Perfection of security interests 187.323
Retaining information 187.331
Satisfaction of a security interest 187.327
Surrender of title for purposes of documentation 187.315
Title of another State 187.313
Transfer by operation of law 187.311
Transfer of title 187.309

I

Identification of Boats ..... Part 181-Subpart C
Applicability, effective date, and purpose 181.21
Conditions for use of manufacturer identification codes 181.33
Hull identification Number
Display 181.29
Format 181.25

Manufacturer identification code assignment 181.31
Removal of numbers 181.35
Required 181.23
Incorporation by reference 181.4, 183.5
Information to be Collected by Participating States ..... Part 187-Subpart B
Identify a vessel 187.103
Identify a vessel owner 187.101
On titled vessels 187.105
To assist law enforcement officials 187.107
Initial report to the Commandant 179.13
Instruction Pamphlet for Personal Flotation
Devices (PFD) ..... Part 181-Subpart G
Applicability 181.701
Contents 181.703
Recreational hybrid PFD 181.704
Recreational inflatable PFD 181.705
Issue of Certificate of Number ..... Part 173
Application for certificate of number 173.71
Availability of Coast Guard forms 173.83
Coast Guard fees 173.85
Coast Guard forms for numbering and casualty reporting 173.81
Duplicate certificate of number 173.73
Expiration of Coast Guard certificate of number 173.79
Temporary certificate 173.75
Validity of certificate of number 173.77

M

Manufacturer Certification of Compliance ..... Part 181-Subpart B
Applicability and purpose 181.5
Labels .....
Affixing 181.9
Compliance certification label 181.7
Construction 181.19
Contents 181.15
Exceptions to labeling requirement 181.11
Numbers and letters 181.17
Removal of 181.13
Manufacturer discovered defects 179.05
Manufacturer requirements ..... Part 181

N

Notice given by ‘‘more expeditious means’’ 179.07
Numbering
Applicability 173.11
Certificate of number required 173.21
Coast Guard validation sticker 173.35
Exemptions 173.13
Inspection of certificate 173.23
Location of certificate number 173.25
Notification to issuing authority 173.29
Numbers: Display; size; color 173.27
Other numbers prohibited 173.19
Reciprocity 173.17
Removal of number 173.33
Surrender of certificate of number 173.31

Vessel number required 173.15
Numbering System Requirements
Applicability of State numbering system 174.11
Contents of application for certificate of number 174.17
Contents of a certificate of number 174.19
Contents of a temporary certificate 174.21
Duration of certificate of number 174.27
Form of number 174.23
Owner or operator requirements 174.13
Size of certificate of number 174.25
State numbering system optional sections 174.14
Temporary certificate of number 174.29
Terms and conditions for vessel numbering 174.31
Validation stickers 174.15

O

Order of unsafe condition 177.04
Other unsafe conditions 177.07

P

Participation procedures 187.7
Penalties 177.09
Penalties 179.17
Personal Flotation Devices
Applicability 175.11
Condition; size and fit; approval marking 175.21
Definitions 175.13
Exemptions 175.17
Personal flotation devices required 175.15
Serviceable conditions 175.23
Stowage 175.19
Procedures for certification of compliance with guidelines for State vessel titling systems 187.9

R

Regulated Boating Areas
Chetco River Bar, Oreg ..... 177.08(p)
Columbia River Bar, Wash-Oreg ..... 177.08(d)
Coos Bay Bar, Oreg ..... 177.08(m)
Coquille River Bar, Oreg ..... 177.08(n)
Depoe Bay Bar, Oreg ..... 177.08(i)
Grays Harbor Entrance ..... 177.08(b)
Nehalem River Bar, Oreg ..... 177.08(e)
Netarts Bay Bar, Oreg ..... 177.08(g)
Quillayute River Entrance, Wash ..... 177.08(a)
Roque River Bar, Oreg ..... 177.08(o)
Siletz Bay Bar, Oreg ..... 177.08(h)
Siuslaw River Bar, Oreg ..... 177.08(k)
Tillamook Bay Bar, Oreg ..... 177.08(f)
Umpqua River Bar, Oreg ..... 177.08(l)
Willapa Bay, Wash ..... 177.08(c)
Yaquina Bay Bar, Oreg ..... 177.08(j)
Requirements for approval 174.5

S

Safe Loading ..... Part 183-Subpart C
Applicability 183.31
Maximum Weight Capacity .....
Boats rated for manual propulsion and boats rated for motors of two horsepower or less 183.37
Inboard and inboard-outdrive boats 183.33
Outboard boats 183.35
Persons Capacity .....
Boats rated for manual propulsion and boats rated for motors of two horsepower or less 183.43
Inboard and inboard-outdrive boats 183.39
Outboard boats 183.41
Safe Powering ..... Part 183-Subpart D
Applicability 183.51
Horsepower capacity 183.53
Special Provisions ..... Part 183-Subpart N
Applicability to ‘‘OMC Sea Drive’’ installation 183.904
Start-in-Gear Protection ..... Part 183-Subpart L
Applicability 183.701
Definitions 183.705
Exception 183.715
Start-in-gear protection required 183.710
State numbering and casualty reporting systems ..... Part 174
State Reports ..... Part 174
Annual report of numbered vessels 174.123
Coast Guard address (*may need to update) 174.125
Forwarding of casualty or accident reports 174.121

V

Ventilation 175.201
Ventilation ..... Part 183
Applicability 183.601
Definitions 183.605
Incorporation by reference 183.607
Natural ventilation system 183.620
Powered ventilation system 183.610
Standards for natural ventilation 183.630
Vessel identification system ..... Part 187
Vessel Identification System Participation .....
Requirements ..... Part 187-Subpart C
Participating State requirements 187.201
Voluntary provisions for participating States 187.203
Vessel identifier 187.5
Vessel numbering and casualty and accident reporting ..... Part 173

Index

Visual Distress Signals
Accepted 175.130
Applicability 175.101
Definitions 175.105
Exceptions 175.115
Existing equipment 175.135
Launchers 175.113
Marking 175.128
Prohibited use 175.140
Pyrotechnic Signal Devices ..... Table 175.130
Required 175.110
Serviceability 175.125
Stowage 175.120